VARIAN 620/L-100

MAINTENANCE MANUAL

Specifications Subject to Change Without Notice

varian data machines/a varian subsidiary
© 1973

CUSTOMER: VID

END USER: VID

SALES ORDER: 37-16986

DATE:

FROM: C. M. FUJIOKA

BRIEF DESCRIPTION & NOTES

This 620/L-103 has been modified per VID document #998712-01.

The memory timing and control board (slot 6) has a bootstrap loader protect option (DM-395A) protecting addresses 0 to 77_8 and the upper 400_8 locations.

APPROVED BY: _____
PROD. MGR.

DATE: _____

A

DO NOT SCALE DRAWING

DESCRIPTION OF CHANGE					

03-950670

A 03-998114

DO NOT SCALE DRAWING

VENDOR: VDM IRVINE

VDM MODEL E-2861 B

This consists of:

1) 1 620L-103 16K CPU

2) 1 E 2847 BOOTSTRAP PROTECT (03-998 116)

3) LESS THE FOLLOWING:

PRIORITY INTERRUPT MODULE (PIM)

REAL TIME CLOCK

FRONT PANEL, LATCH & HINGE BRACKETS

DOCUMENTATION & TAPES (See Note 2)

NOTES: 1) Test unit with front panel, then remove panel. VDM/PA will install adapter board to permit operation without front panel.

2) Does not include program tapes or listings. Only documentation required is Maintenance Manual, Volume 2.

SPEC CONTROL DRAWING

DESCRIPTION OF CHANGE	WAS CLASSIC	ADDED PART # TO #2	
DFT	[illegible]	[illegible]	
CHK	[illegible]	[illegible]	
DATE	[illegible]	[illegible]	
REV	[illegible]	[illegible]	

DRAWN	DATE	APPROVED	DATE	CODE
R.Anderson	11/1/72			
CHECKED	DATE	APPROVED	DATE	CLASS
		[illegible]	11/10/72	A

620 L CPU for VID (GATOR)

NOT OTHERWISE SPEC: FRAC ± ANG ± SCALE —

FIN. ✓ DEC .X ± .XX ± .XXX ±

varian

DIVISION	SIZE	DRAWING NO.	REV
VDM/Palo Alto	A	03-998114	B

ADDENDUM

620/i and 620/L Power Failure/Restart Manuals

98 A 9902 442

February 1972

Not only must the PF/R threshold be readjusted when the power supply and/or the PF/R card is changed, it must also be readjusted whenever a change from 50 to 60 Hz (or vice versa) operation is made, or whenever there is an increase in the load on the +5V dc supply.

ASM NO	TYPE OR MODEL	NEXT ASSEMBLY
	CDS	03-950348

NO	PART NUMBER	DESCRIPTION OR MATERIAL

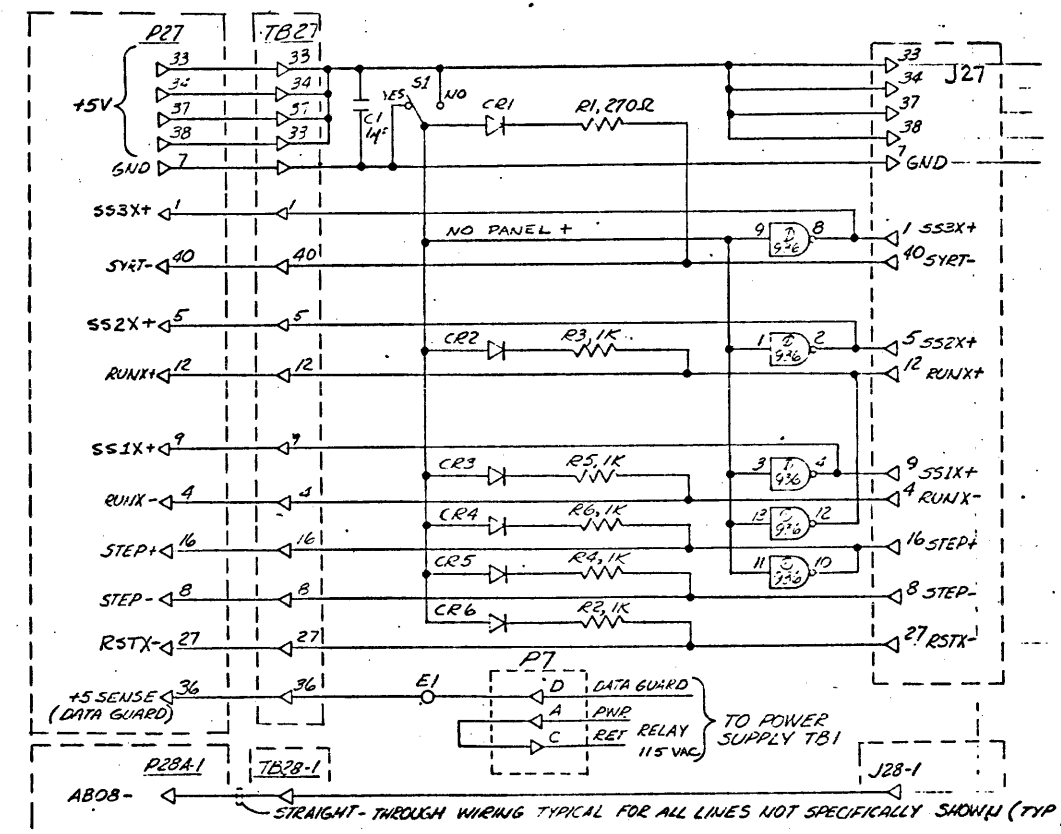

TO/FROM COMPUTER MAIN FRAME (J27 & 28)

TO/FROM COMPUTER FRONT PANEL (P27 & 26)

DO NOT SCALE DRAWING

NOTES:

1. CR1 THRU CR6 ARE IN914.
ALL RESISTORS ARE ¼W, 5%.

DESCRIPTION OF CHANGE	
NUM	
ECO	3280-1
DRT	CDS
CHK	JHT
DATE	4/2/73
REV	B

DRAWN	DATE	APPROVED	DATE	CODE
J DAY	4/2/73			
CHECKED	DATE	APPROVED	DATE	CLASS
JHT	4/2/73			2

SCHEMATIC, 620/L PANEL SHOE

NOT OTHERWISE SPEC FRAC ±	ANG ±	SCALE
FIN √ DEC .X ± .XX ±	XXX ±	~

varian	DIVISION	SIZE	DRAWING NO	REV
	CDS	C	03-950346	B

A 03-998

DO NOT SCALE DRAWING

VENDOR: VDM IRVINE

VDM MODEL E-2847 Loader Protect

This is Loader-protect option for 620L-100 (Model 620L-115) with following modification:

Locations 0 to 77_8, inclusive, are protected in the same manner as the upper 400_8 locations.

Any attempt to write in the locations specified above will be converted to a read cycle. No HALT or interrupt will be generated.

The purpose of the additional protection is to preserve the Power-on interrupt locations and the GATOR manual-interrupt location (0).

DESCRIPTION OF CHANGE			DRAWN	DATE	APPROVED	DATE	CODE
WAS CLASS "C"			R. Anderson	11/10/72			
			CHECKED	DATE	APPROVED	DATE	CLASS
					[signature]	11-10-72	A
			SPEC CONTROL DWG: E-2847 LOADER PROTECT				
	3023-1		NOT OTHERWISE SPEC: FRAC ± ANG ±				SCALE
DFT	JJD		FIN. ✓ DEC .X ± .XX ± .XXX ±				—
CHK	JHT		varian	GDS	A	03-998116	A
DATE	[illegible]			DIVISION	SIZE	DRAWING NO.	REV
REV	[illegible]						

DWG NO 98A0935

REVISIONS

SYM	DESCRIPTION	APPROVED	DATE
A	PRODUCTION RELEASE PER EN 81815	[illegible]	3/28/73

DR K. Ellinor	2/27/73
CHK	
DSGN	
ENGR [illegible]	3/28/73
APPD [illegible]	3/28/73
APPD	

varian data machines /a varian subsidiary
2722 michelson drive / irvine / california / 92664

TITLE

ENGINEERING DESCRIPTION
BOOTSTRAP LOADER PROTECT
(E-2847)

THIS DOCUMENT MAY CONTAIN PROPRIETARY INFORMATION AND SUCH INFORMATION MAY NOT BE DISCLOSED TO OTHERS FOR ANY PURPOSE OR USED TO PRODUCE THE ARTICLE OR SUBJECT, WITHOUT WRITTEN PERMISSION FROM VDM

CODE IDENT NO.	SIZE	DWG NO.	REV
21101	A	98A0935	A

SCALE

SHEET 1 OF 10

98A0153-0006

ENGINEERING DATA FORM

OPTION	Bootstrap Loader Protect
MODEL	
NO. OF LOGIC CARDS REQ'D.	Assembled on the memory timing and control
NO. OF CARD SLOTS REQ'D.	1
LOCATION OF SLOTS (NUMBERING)	CPU Card Slot 6
CONNECTORS REQ'D. (EXCLUDING I/O)	N/A
KEYING	
ST'D. DEVICE ADDRESS	N/A
WIRELIST NUMBER	N/A (PC Board)
MANUAL PUBLICATIONS NUMBER	This document
PERIPHERAL EQUIPT. REQ'D	For test only: BIC and paper tape system
MFG'R.	
MODEL	
GEN'L. SPECS	

NOTES:

Drawings:

Top Assembly	44P0671
Logic Diagram	91D0436
Bracket Assembly	04C0656

Software and test procedures are part of this drawing.

varian data machines
a varian subsidiary
2722 michelson drive
irvine/california/92664

CODE IDENT. NO		98A0935	REV A
PREPARED BY	APPR.	SHT 2 OF 10	

SECTION 1
GENERAL DESCRIPTION

The loader protect feature consists of additional logic located on the memory timing and control board plus additional backplane wiring to a switch. Drawing describes the modification procedure.

The purpose of the loader protect is to prevent writing into the last 400_8 locations of a selected 4K memory increment and locations 0 through 77_8 of the first 4K memory increment.

SECTION 2
FUNCTIONAL DESCRIPTION

The loader protect feature prevents writing into memory locations which are used by the bootstrap and binary load/dump routines. These locations are normally the last 400 octal addresses of the core memory. The loader protect circuitry is located on the timing and control card located in CPU card slot 6. The card contains jumper pads for the three most significant address terms (L12X+, L13X+, L14X+). Jumpers are installed at the factory or in the field when the system memory capacity exceeds 4K. Address may be adjusted to protect any memory increment from 4 to 32K.

NOTE: If no jumpers are installed, the last 400 octal locations of each 4K section is controlled by the loader protect circuitry. (See Table 1 for jumper configuration).

There is a switch mounted on the chassis inside the front panel that enables and disables the option.

There are no additional instructions or control terms for this option. All addresses for write type operation are compared for error. An error occurs whenever a write type operation is attempted in a protected area with the option enabled.

SECTION 3
THEORY OF OPERATION

All addresses being accessed in memory are checked by the loader protect option. When the address being accessed is equal to that of a protected address, and LPEX+ (loader protect enable from switch) is true, and H2XX+ (decode for a store instruction) is true, then the WRTX+ (write control to memory) is forced to ground. This causes the memory cycle to be a read/restore cycle.

After an error, the WRTX+ signal will be forced to ground causing a read cycle, and the computer will continue to cycle, changing all write cycles in a protected area. During a trap-in operation, the read/write command (WRTX+) and the memory start pulse (MSPX+) are forced to the low state and the CPU continues to cycle.

3.1 TRAP-IN OPERATION

When executing a trap-in request with the option enabled, if the memory address provided by the trapping device is in the protected area, the following events occur. The read/write command (WRTX+) and the memory start pulse (MSPX+) are forced to the low state.

3.2 LOADER PROTECT ENABLE/DISABLE SWITCH

A toggle switch located on the chassis inside the front panel is used to enable the loader protect circuitry. When the switch is in the disable position, all memory locations are available for storage. However, when the switch is in the enable position, the loader protect feature prevents writing into the memory locations X7400 through X7777 and locations 0 through 77_8.

*X = 4K core segment

3.3 ADDRESS SELECTION

Table 1 shows jumper placement on the memory timing and control board for address selection. Typically, the system memo will specify the proper jumpering.

TABLE 1

MEMORY SIZE	JUMPERS REQ.		
	A-A	B-B	C-C
4K	No	No	No
8K	No	No	Yes
12K	No	Yes	No
16K	No	Yes	Yes
20K	Yes	No	No
24K	Yes	No	Yes
28K	Yes	Yes	No
32K	Yes	Yes	Yes

A-A, B-B and C-C are jumper pads for the three most significant address terms and are located on the memory timing control board.

SECTION 4
MNEMONIC LIST

H2XX+	Store instruction decode
ICLX-	Inhibit clock
L02X+ through L14X+	Memory address register lines
LPEX+	Loader protect enable from switch
MSPX+	Memory start pulse
TPIX-I	Trap-in
WRTX+	Read/write command

SECTION 5
TEST DESCRIPTION

5.1 PROGRAM MODE TEST

Using Aid II program with loader protect disabled write a fixed data pattern in locations 0 through 77 and X7400 through X7777.

X = 0-7 for
4 → 32K
I^E 4K = 0
8K = 1

i.e.
I 0 , 77, 177777,.
I X7400, X7777, 177777,.

Enable loader protect then write a different fixed pattern in locations 0 through 77 and locations X7400 through X7777.

i.e.
I 0 , 77, 0.

I X7400, X777,0,.

Now verify that the original pattern did not get altered by reading locations 0 77 and X7400 X7777 and comparing it with the original pattern by using the search function of Aid II program.

i.e.
S 0, 77, 177777, N
S X7400, X7777, 177777, N

If any errors occurred, they will be listed as follows: There should be no errors.

i.e.
Address Contents
000043 (000000)

5.2 TRAP-IN TEST

Using the Aid II program load the following program into core starting at location 100.

100	100021	Initialize BIC
101	006010	LDAI
102	0	
103	006020	LDBI
104	-77	
105	101537	Sen Buff Ready
106	000111	
107	001000	JMP
110	000105	
111	103120	OAR BIC Initial Reg.
112	103221	OBR BIC Final Reg.
113	100020	Activate BIC
114	100537	Start Reader
115	005000	NOP
116	101020	Sen BIC Not Busy
117	000122	
120	001000	JMP
121	000115	
122	100021	Initialize BIC
123	006010	LDAI
124	0X7400	
125	006020	LDBI
126	0X7777	
127	101537	Sen Buff Ready
130	000133	
131	001000	
132	000127	
133	103120	OAR BIC Initial Reg.
134	103221	OBR BIC Final Reg.
135	100020	Activate BIC
136	100537	Start Reader
137	005000	NOP
140	101020	Sen BIC Not Busy
141	0X6000	
142	001000	JMP
143	000137	

Place a test tape in the reader, [redacted] then run the program starting at location 100. When it is complete, it will return to the Aid II program.

Verify that none of the protected locations of core get altered by using the search function of the Aid II program.

i.e.
S 0 , 77, 177777, N
S X7400, X7777, 177777, N

Any errors will be listed as in previous test. There should be no errors.

varian data machines
a varian subsidiary

DOCUMENTATION RECORD

CUSTOMER VARIAN GADS
JOB ORDER NO. 73284-24
MODEL NO. 620/L-100
SHIP DATE
SYS. SERIAL NO. 81
CHECKED BY

UNIT	DOCUMENTATION NO.	REV	ART REV	S/N	DESCRIPTION	INSP.
	01E1035	-	-	-	FRAME ASSY	
	01D1036	-	-	-	FRONT PANEL ASSY	
	93D0275	-	-	-	POWER SUPPLY INSTALLATION	
	3238441	-	-	-	CORE STACK	
DM288	44P0506	P		11047	SENSE INHIBIT	
DM288	44P0506	P		11050	SENSE INHIBIT	
DM288	44P0506	P		8987	SENSE INHIBIT	
DM288	44P0506	P		9018	SENSE INHIBIT	
DM288	44P0506				SENSE INHIBIT	
DM288	44P0506				SENSE INHIBIT	
DM295	44P0515				DISPLAY BOARD	
DM327	44P0578	G		3075	DRIVE/SINK SW	
DM327	44P0578	G		3142	DRIVE/SINK SW	
DM327	44P0578				DRIVE/SINK SW	
DM336	44P0592	D		3684	REGISTER CARD	
DM336	44P0592	D		3688	REGISTER CARD	
DM336	44P0592	D		3675	REGISTER CARD	
DM336	44P0592				REGISTER CARD	
DM336	44P0592				REGISTER CARD	
DM336	44P0592				REGISTER CARD	
DM337	44P0593	N		1152	PROCESSOR CONT. #4	
DM337	44P0593				PROCESSOR CONT. #4	
DM338	44P0594	D		1435	HM/D & F.A.	
DM338	44P0594				HM/D & F.A.	
DM339	44P0595	B		1547	PROCESSOR CONT #1	
DM339	44P0595				PROCESSOR CONT #1	
DM340	44P0596	F		1314	PROCESSOR CONT. #2	
DM340	44P0596				PROCESSOR CONT. #2	
DM341	44P0597	E		1153	PROCESSOR CONT. #3	
DM341	44P0597				PROCESSOR CONT. #3	
DM342	44P0598	E		1380	DMA	
DM343	44P0671	F		092	MEMORY T AND CONT.	
DM343	44P0599				MEMORY T AND CONT.	

-0008

PREPARED BY Ma DATE 5-30-74

NOTE:

varian data machines
a varian subsidiary

DOCUMENTATION RECORD

CUSTOMER VARIAN GADS
MODEL NO. 620/L-100
SYS. SERIAL NO. 81

JOB ORDER NO. 73284-29
SHIP DATE
CHECKED BY

UNIT	DOCUMENTATION NO.	REV	ART REV	S/N	DESCRIPTION	INSP.
DM301	44P0521	F		1155	MEMORY BUFFER	
DM308	44P0530				TERM SHOE	
DM124-1	44P0172				PIM	
DM123-3	44P0185	U		2347	PFR/RTC	
	83P0035	P		182	POWER SUPPLY	
	95W0908				WIRE LIST	

PREPARED BY MA DATE 5-30-74

NOTE:

-JUCR

varian data machines /a varian subsidiary
2722 michelson drive / irvine / california / 92664 / (714) 833-2400

PARTS LIST FOR 620/L AND 620/L-100 CIRCUIT CARDS

The following is a composite parts list for the 620/L and 620/L-100. It is divided into three sections. Section 1 contains the standard circuit cards, section 2 the power supply, and section 3 the controller cards. The parts for each circuit card are listed in numerical order according to Varian part numbers. The reference designations in the parts list also appear on the assembly drawings and logic diagrams.

Card P/N and Name	Varian P/N	Manufacturer and P/N	Reference Designation
1. STANDARD LOGIC CARDS			
44P0172 *	49A0002-000	Tex Inst SN7473N	IC 16,33,39,44,49
Priority	49A0004-000	Tex Inst SN7440N	IC 41
Interrupt	49A0007-000	Tex Inst SN7400N	IC 23,24
Module	49A0008-000	Tex Inst SN15846N	IC 6,10,12,18,19,25,26, 30,32,38,43,45,46,48,50
	49A0010-000	Fairchild SL18162	IC 4,5,11,28,29,36
	49A0011-000	Tex Inst SN15830N	IC 1,7,13,17,20,21,27,35,51
	49A0012-000	Tex Inst SN7474N	IC 2,3,9,15,31,37,42,47
	49A0014-000	Tex Inst SN15850N	IC 22,34
	49A0016-000	Tex Inst SN15833N	IC 8,14,40
44P0185	49A0002-000	Tex Inst SN7473N	IC 3,13,19,20,26,27,33
Power Failure/	49A0004-000	Tex Inst SN7440N	IC 22,23,32
Restart and	49A0007-000	Tex Inst SN7400N	IC 8,9,12,31
Real-Time	49A0008-000	Tex Inst SN15846N	IC 1,2,4,5,6,11,21,24,25, 34,35,36,37,39,40,41
Clock	49A0010-000	Fairchild SL18162	IC 14,15,16,17,18,28,30,42
	49A0011-000	Tex Inst SN15830N	IC 7,10
	49A0518-000	Motorola MC851L	IC 29,38
	76A2369-000	2N2369	Q 3,5,6,8,9,10,11,15,16,17,1
	76A3009-000	2N3009	Q 12,19
	76A4034-000	2N4034	Q 1,2,4,7,13,14
	76N4916-000	Fairchild 2N4916	Q 1,2,4,7,13,14
	76S1002-000	Motorola 2N3019	Q 20
	76S1046-000	Fairchild 2N3646	Q 12,19
	77N0753-000	IN753	CR 3,10
	77S1017-000	Fairchild EDN400	CR 1,2,4,5,6,7,9

* See page 6 for another version of Priority Interrupt Module.

REVISIONS			
ZONE	DESCRIPTION	APPROVED	DATE
	SEE SHEET 1		

01E1035 J

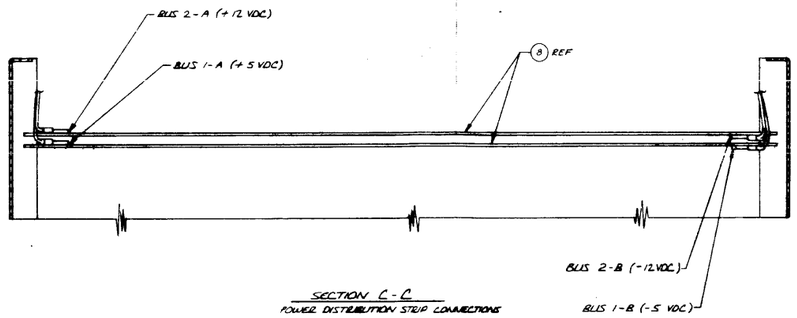

SECTION C-C
POWER DISTRIBUTION STRIP CONNECTIONS

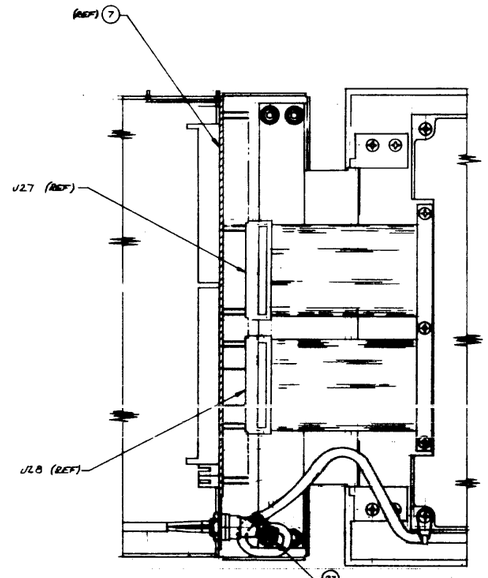

SECTION D-D
ROTATED CCW 90°

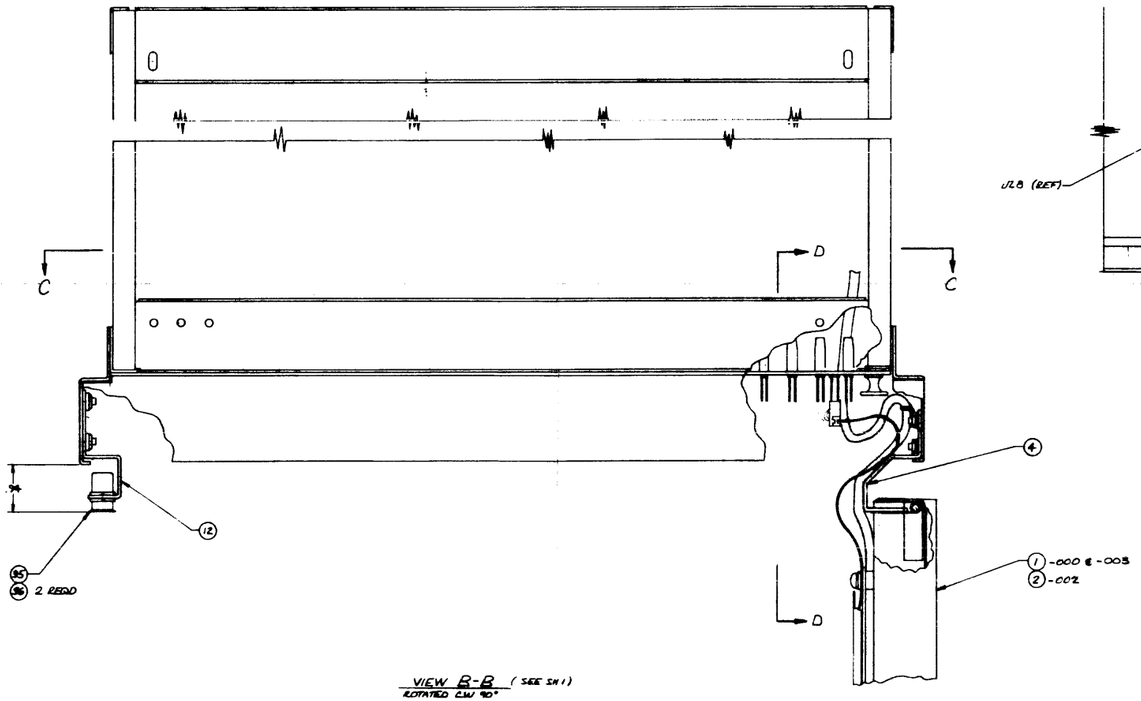

VIEW B-B (SEE SH 1)
ROTATED CW 90°

NOTE: UNLESS OTHERWISE SPECIFIED

CAGE DRAWING NO.	SIZE	DRAWING NO.	REV
21101	E	01E1035	J
SCALE 1/1			SHEET 2 OF 2

01E1035
J

Card P/N and Name	Varian P/N	Manufacturer and P/N	Reference Designation
44P0506 Sense/Inhibit	48A0002-001	Varian	A 101,201,401,501,701, 801,1001,1101
	48A0003-001	Varian	A 303,603,903,1203
	49A0022-000	Tex Inst SN74H11N	IC 4,5,7,9,10,12
	49A0032-000	Tex Inst SN7402N	IC 2
	49A0042-000	Tex Inst SN74H01N	IC 1,3,6,8,11
	49A0080-000	Tex Inst SN7524N	IC 101,201,401,501,701, 801,1001,1101
	49A0119-000	Motorola MHQ5859	A 302,602,902,1202
	76A2369-000	2N2369	Q 301 through 304, 601 through 604, 901 through 904, 1201 through 1204
	77S1017-000	Fairchild EDN400	CR 101,102,103,104 through 904,1201,1202,1203,1204, 305,605,905,1205
44P0515 Display Board	49A0004-000	Tex Inst SN7440N	IC 15
	49A0040-000	Tex Inst SN7404N	IC 3,7,11,13
	49A0110-000	Tex Inst SN75451BP	IC 1,2,4,5,6,8,9,10,12,14
44P0521 Memory Buffer	49A0023-000	Tex Inst SN74H04N	IC 2,4,7
	49A0025-000	Varian	A 1,2
	49A0042-000	Tex Inst SN74H01N	IC 1,3,5,6,8
	49A0124-000	Tex Inst SN7407N	IC 13,14,15
	49A0125-000	Tex Inst SN7408N	IC 9,10,11,12
44P0578 Driver/Sink Switch	49A0032-000	Tex Inst SN7402N	IC 1,3
	49A0041-000	Tex Inst SN74H51N	IC 4,7,8
	49A0044-000	Tex Inst SN7442N	IC 2,5,9,11
	49A0118-000	Tex Inst SN7427N	IC 6,10
	49A0119-000	Motorola MHQ5859	A 102,104,202,204,302,304,402 404,502,504,602,604,702,704 802,804
	76A0002-000	2N3725A	Q 25
	76A2369-000	2N2369	Q 1,2,5,9,12,13,14,17,18
	76A2904-000	2N2904	Q 23
	76A2907-000	Motorola 2N2907	Q 3,4,6,7,8,10,11,15,16,19,20
	76N3640-000	2N3640	Q 21,24
	76S1046-000	Fairchild 2N3646	Q 22,26
	77N0751-000	Tex Inst IN751A	CR 7,10,11,12,13,14
	77S1017-000	Fairchild EDN400	CR 1 through 6,8,9,15, 101 through 116, 201 through 216, 301 through 316, 401 through 416, 501 through 524, 601 through 624, 701 through 724, 801 through 824

Card P/N and Name	Varian P/N	Manufacturer and P/N	Reference Designation
44P0592 Register Card	49A0000-000	Tex Inst SN7475N	IC 9,21,33
	49A0007-000	Tex Inst SN7400N	IC 13,24
	49A0010-000	Fairchild SL18162	IC 2,6,7
	49A0012-000	Tex Inst SN7474N	IC 4,8,14
	49A0023-000	Tex Inst SN74H04N	IC 12,18,41
	49A0040-000	Tex Inst SN7404N	IC 1
	49A0095-000	Tex Inst SN74H52N	IC 15
	49A0096-000	Tex Inst SN74181N	IC 19,25
	49A0102-000	Tex Inst SN74182N	IC 3
	49A0104-000	Motorola MC3001P	IC 26
	49A0106-000	Tex Inst SN74H53N	IC 5,10,11,16,17,22,23,27, 28,29,30,31,32,34,35,40, 42,43,44
	49A0141-000	Tex Inst SN74174N	IC 36,37,38,39
	49A0554-001	Tex Inst SN74H10N	IC 20
	77S1011-000	Varian	CR 1 through 6
44P0593 Processor Control Number 4	49A0000-000	Tex Inst SN7475N	IC 40
	49A0002-000	Tex Inst SN7473N	IC 4,18,19,43
	49A0004-000	Tex Inst SN7440N	IC 2
	49A0005-000	Tex Inst SN7410N	IC 10,13,44
	49A0006-000	Tex Inst SN7420N	IC 21
	49A0007-000	Tex Inst SN7400N	IC 5,12,42
	49A0010-000	Fairchild SL18162	IC 1,29
	49A0019-000	Tex Inst SN74H40N	IC 6,7,32
	49A0020-000	Tex Inst SN74H72N	IC 8
	49A0023-000	Tex Inst SN74H04N	IC 14,17,22
	49A0025-000	Varian	A 1,2
	49A0036-000	Tex Inst SN74H73N	IC 28
	49A0038-000	Tex Inst SN74H22N	IC 15
	49A0039-000	Tex Inst SN74H00N	IC 9,39,41,45
	49A0042-000	Tex Inst SN74H01N	IC 3,27
	49A0056-000	Tex Inst SN74H20N	IC 31,33,38
	49A0077-000	Tex Inst SN74H60N	IC 24
	49A0104-000	Motorola MC3001P	IC 16,25
	49A0106-000	Tex Inst SN74H53N	IC 26
	49A0127-000	Tex Inst SN74161N	IC 23
	49A0138-000	Tex Inst SN7437N	IC 11,30,37
	49A0146-000	Tex Inst SN74122N	IC 46
	49A0554-001	Tex Inst SN74H10N	IC 20,34,35,36

Card P/N and Name	Varian P/N	Manufacturer and P/N	Reference Designation
44P0594 Multiply/ Divide, Extended Address	49A0000-000	Tex Inst SN7475N	IC 16
	49A0002-000	Tex Inst SN7473N	IC 2,29
	49A0006-000	Tex Inst SN7420N	IC 27
	49A0007-000	Tex Inst SN7400N	IC 21,22
	49A0008-000	Tex Inst SN15846N	IC 6,8,9,24,25
	49A0009-000	Tex Inst SN15862N	IC 19
	49A0010-000	Fairchild SL18162	IC 7
	49A0011-000	Tex Inst SN15830N	IC 10,14,28
	49A0036-000	Tex Inst SN74H73N	IC 15
	49A0038-000	Tex Inst SN74H22N	IC 1,4,5,13,18
	49A0039-000	Tex Inst SN74H00N	IC 17,32
	49A0042-000	Tex Inst SN74H01N	IC 3,20
	49A0128-001	Tex Inst SN7438N	IC 11,12,26,30,31
	49A0142-000	Tex Inst SN7412N	IC 23
44P0595 Processor Control Number 1	49A0000-000	Tex Inst SN7475N	IC 18,19,26,27
	49A0002-000	Tex Inst SN7473N	IC 1,4,8,34
	49A0004-000	Tex Inst SN7440N	IC 37
	49A0005-000	Tex Inst SN7410N	IC 36
	49A0007-000	Tex Inst SN7400N	IC 7,10
	49A0008-000	Tex Inst SN15846N	IC 2,5,12,13,15,16,20,24, 25,28,29,30,31,33
	49A0009-000	Tex Inst SN15862N	IC 11
	49A0011-000	Tex Inst SN15830N	IC 3,6
	49A0019-000	Tex Inst SN74H40N	IC 32
	49A0021-000	Tex Inst SN7401N	IC 14,21,22,23
	49A0039-000	Tex Inst SN74H00N	IC 9
	49A0042-000	Tex Inst SN74H01N	IC 17
	76N3055-000	2N3055	Q 1
	77N4730-000	IN4730A	CR 1
	77S1011-000	Varian	CR 2
44P0596 Processor Control Number 2	49A0000-000	Tex Inst SN7475N	IC 41
	49A0002-000	Tex Inst SN7473N	IC 9,20,27
	49A0004-000	Tex Inst SN7440N	IC 18,40,43
	49A0005-000	Tex Inst SN7410N	IC 10,11,30,48
	49A0006-000	Tex Inst SN7420N	IC 22,23,26,28,34
	49A0007-000	Tex Inst SN7400N	IC 4,5,7,12,19,37
	49A0008-000	Tex Inst SN15846N	IC 15,17,31,42
	49A0009-000	Tex Inst SN15862N	IC 1,6,29
	49A0010-000	Fairchild SL18162	IC 13,24,47
	49A0011-000	Tex Inst SN15830N	IC 3,21,25
	49A0019-000	Tex Inst SN74H40N	IC 32
	49A0038-000	Tex Inst SN74H22N	IC 8,14,38
	49A0039-000	Tex Inst SN74H00N	IC 36
	49A0042-000	Tex Inst SN74H01N	IC 2,16,35,39,45
	49A0056-000	Tex Inst SN74H20N	IC 33
	77S1011-000	Varian	CR 1

Card P/N and Name	Varian P/N	Manufacturer and P/N	Reference Designation
44P0597 Processor Control Number 3	49A0002-000	Tex Inst SN7473N	IC 2,12
	49A0004-000	Tex Inst SN7440N	IC 1,5,9,15,18,20,24,29
	49A0005-000	Tex Inst SN7410N	IC 4
	49A0006-000	Tex Inst SN7420N	IC 10,14,43
	49A0007-000	Tex Inst SN7400N	IC 13,42
	49A0008-000	Tex Inst SN15846N	IC 11,23,27,28,32,33
	49A0009-000	Tex Inst SN15862N	IC 6,31
	49A0019-000	Tex Inst SN74H40N	IC 26,34,41
	49A0038-000	Tex Inst SN74H22N	IC 37
	49A0039-000	Tex Inst SN74H00N	IC 19,38
	49A0042-000	Tex Inst SN74H01N	IC 7,16,21,22,30,36,39
	49A0128-001	Tex Inst SN7438N	IC 3,8
	49A0142-000	Tex Inst SN7412N	IC 25,35,40
	49A0554-000	Tex Inst SN74H10N	IC 17,44
	77S1011-000	Varian	CR 1,2
44P0598 Interrupt Trap	49A0002-000	Tex Inst SN7473N	IC 1,9
	49A0004-000	Tex Inst SN7440N	IC 24,28,32
	49A0005-000	Tex Inst SN7410N	IC 40
	49A0007-000	Tex Inst SN7400N	IC 10,15
	49A0008-000	Tex Inst SN15846N	IC 3,6,12,14,16,20,23,27, 35,37,38
	49A0010-000	Fairchild SL18162	IC 2,8
	49A0011-000	Tex Inst SN15830N	IC 36
	49A0021-000	Tex Inst SN7401N	IC 39
	49A0036-000	Tex Inst SN74H73N	IC 19
	49A0038-000	Tex Inst SN74H22N	IC 7
	49A0039-000	Tex Inst SN74H00N	IC 18,22,26,30,31,34
	49A0042-000	Tex Inst SN74H01N	IC 13,17,21,25,29,33
	49A0056-000	Tex Inst SN74H20N	IC 4,11
	49A0142-000	Tex Inst SN7412N	IC 5
	77S1011-000	Varian	CR 1,2
44P0599 Memory Timing and Control	49A0003-000	Tex Inst SN7472N	IC 9
	49A0019-000	Tex Inst SN74H40N	IC 17
	49A0023-000	Tex Inst SN74H04N	IC 7,13
	49A0039-000	Tex Inst SN74H00N	IC 6,11
	49A0041-000	Tex Inst SN74H51N	IC 16
	49A0056-000	Tex Inst SN74H20N	IC 12
	49A0079-000	Tex Inst SN74H54N	IC 8,15
	49A0146-000	Tex Inst SN74122N	IC 14
	49A0554-001	Tex Inst SN74H10N	IC 10
	77S1017-000	Fairchild EDN400	CR 1

Card P/N and Name	Varian P/N	Manufacturer and P/N	Reference Designation
44P0640 Memory Timing and Control	49A0003-000	Tex Inst SN7472N	IC 9
	49A0019-000	Tex Inst SN74H40N	IC 17
	49A0023-000	Tex Inst SN74H04N	IC 7,13
	49A0039-000	Tex Inst SN74H00N	IC 6,11
	49A0041-000	Tex Inst SN74H51N	IC 16
	49A0056-000	Tex Inst SN74H20N	IC 12
	49A0079-000	Tex Inst SN74H54N	IC 8,15
	49A0146-000	Tex Inst SN74122N	IC 14
	49A0554-001	Tex Inst SN74H10N	IC 10
	77S1017-000	Fairchild EDN400	CR 1
44P0683 Priority Interrupt Module	49A0002-000	Tex Inst SN7473N	C 6,7; D 6,7
	49A0012-000	Tex Inst SN7474N	B 3; C 2,3,4
	49A0022-000	Tex Inst SN74H11N	D 4
	49A0023-000	Tex Inst SN74H04N	C 1; E 3
	49A0036-000	Tex Inst SN74H73N	F 2
	49A0039-000	Tex Inst SN74H00N	E 1,6,7; F 3
	49A0040-000	Tex Inst SN7404N	A 1; B 1,2,3; E 5
	49A0056-000	Tex Inst SN74H20N	A 4,5; C 5; D 1,5
	49A0082-001	Tex Inst SN74H74N	A 6,7; B 6,7; F 1
	49A0093-001	Tex Inst SN74H50N	D 2
	49A0094-001	Tex Inst SN74H21N	E 4
	49A0104-000	Motorola MC3001P	D 3; F 6,7
	49A0128-001	Tex Inst SN7438N	A 2,3
	49A0138-000	Tex Inst SN7437N	E 2
	49A0554-001	Tex Inst SN74H10N	B 4

Board P/N and Name	Varian P/N	Manufacturer and P/N	Reference Designation
2. POWER SUPPLY			
44P0518 Heat Sink Board	76N3055-000	2N3005	Q 1,2
44P0526 Power Supply Board	76A0009-002	Motorola MR751	CR 5,6,7,8,9,10,11,13
	77N4001-004	IN4005	CR 15,16
	77N4003-000	IN4003	CR 12,14
	82A0030-001	Potter Brumfield KUP14AE6-115 VAC	K 1
44P0528 Regulator Board	49A0103-001	Fairchild U5R7723393	IC 1,2,3,4
	76A0007-000	2N3054	Q 1,2,3,5
	76A2904-000	2N2904	Q 4
	77A0004-000	IN746A	CR 6
	77N0751-000	Tex Inst IN751A	CR 3
	77N4003-000	IN4003	CR 4,5
83P0035 Power Supply	76A0008-000	Motorola MR1121	CR 1,2,3,4
	77A0005-000	Motorola MCR3935-2	Q 1
3. CONTROLLER CARDS			
44P0013 Teletype Controller	49A0002-000	Tex Inst SN7473N	IC 6,10,11,22,23,27,28, 30,31,36,41
	49A0004-000	Tex Inst SN7440N	IC 25,40
	49A0007-000	Tex Inst SN7400N	IC 2,3,42
	49A0008-000	Tex Inst SN15846N	IC 1,4,13,14,15,17,19,20, 24,29,34,35,37,43
	49A0009-000	Tex Inst SN15862N	IC 5,38
	49A0010-000	Fairchild SL18162	IC 7,8,9,12,21,39,44
	49A0012-000	Tex Inst SN7474N	IC 16,18,26,32,33
	76A2369-000	2N2369	Q 1 through 4
	76S1072-000	Varian	Q 1 through 4
	77S1017-000	Fairchild EDN400	CR 1 through 10
	82A0006-000	Aztec 20229	K 2
	82A0006-003	Aztec 20213	K 1

Card P/N and Name	Varian P/N	Manufacturer and P/N	Reference Designation
44P0026 Buffer Interlace Controller	49A0000-000	Tex Inst SN7475N	IC 14,28,42,56
	49A0002-000	Tex Inst SN7473N	IC 57
	49A0004-000	Tex Inst SN7440N	IC 15,17,37
	49A0005-000	Tex Inst SN7410N	IC 31
	49A0007-000	Tex Inst SN7400N	IC 4,5,16,38
	49A0008-000	Tex Inst SN15846N	IC 2,6,7,13,20,21,23,27,34, 35,41,43,48,49,55,62,63
	49A0010-000	Fairchild SL18162	IC 1,18,19,29,32,33,46,47, 50,51,58,60,61
	49A0011-000	Tex Inst SN15830N	IC 3
	49A0012-000	Tex Inst SN7474N	IC 11,12,25,26,39,40,53,54
	49A0014-000	Tex Inst SN15850N	IC 8,9,10,22,24,30,36,44, 45,52,59
44P0689 Buffer Interlace Controller	49A0000-000	Tex Inst SN7475N	A 7; B 7; C 7; D 7
	49A0002-000	Tex Inst SN7473N	E 6; F 2; K 4
	49A0012-000	Tex Inst SN7474N	F 6; H 7; K 3
	49A0022-000	Tex Inst SN74H11N	E 4; H 2
	49A0023-000	Tex Inst SN74H04N	A 4; C 4; D 5; E 5; K 5
	49A0039-000	Tex Inst SN74H00N	K 5
	49A0040-000	Tex Inst SN7404N	A 1; B 1; C 1; D 3
	49A0042-000	Tex Inst SN74H01N	A 6; B 6; C 6; D 6
	49A0082-001	Tex Inst SN74H74N	E 2
	49A0093-001	Tex Inst SN74H50N	E 3; F 5,7
	49A0094-001	Tex Inst SN74H21N	H 3
	49A0104-000	Motorola MC3001P	F 1,4; H 6; K 6
	49A0127-000	Tex Inst SN74161N	A 3; B 3; D 4
	49A0128-001	Tex Inst SN7438N	A 2; B 2; C 2; D 1,2; E 1; H
	49A0178-000	Tex Inst SN74175N	H 1
	49A0554-001	Tex Inst SN74H10N	F 3
44P0176 Paper Tape Controller	49A0000-000	Tex Inst SN7475N	IC 8,14
	49A0002-000	Tex Inst SN7473N	IC 52
	49A0004-000	Tex Inst SN7440N	IC 16,25,31,37,40,42, 45,48,51,55
	49A0008-000	Tex Inst SN15846N	IC 1,6,7,10,12,13,15, 18,19,24,27,29,30, 34,36,38,47,49,50,57
	49A0009-000	Tex Inst SN15862N	IC 21,41,53
	49A0010-000	Fairchild SL18162	IC 5,11,17,23,26,32,43
	49A0011-000	Tex Inst SN15830N	IC 35
	49A0014-000	Tex Inst SN15850N	IC 4,28,33,39,44
	49A0018-000	Tex Inst SN15851N	IC 22
	49A0042-000	Tex Inst SN74H01N	IC 2,3,9,20
	49A0146-000	Tex Inst SN74122N	IC 46,56
44P0601 Bootstrap Loader	49A0007-000	Tex Inst SN7400N	IC 2
	49A0039-000	Tex Inst SN74H00N	IC 18
	49A0508-000	Tex Inst SN15846J	IC 4
	49A0510-000	Fairchild SL13016	IC 1,5
	49A0516-000	Motorola MC833L	IC 3

91D0285 E

ZONE	REVISIONS	APPROVED	DATE
X	PROTOTYPE RELEASE		
X1	PROTOTYPE RELEASE; REVISED ALL CIRCUITS		
A	PRODUCTION RELEASE PER EN 5310		
B	TP1 WAS ON SIGNAL SAS2 EN 5505		
C	REMOVED R27-21 WAS 2.2K, ADDED NOTE FOR JUMPER PER EN 80495		
D	REVISED SHT 4 PER EN 81270		
E	.0018 uF WAS .0039 uF @ 14 SL ± 1% 3W, WAS 12 Ω ± 1% 3W. REVISED PER EN 81307		

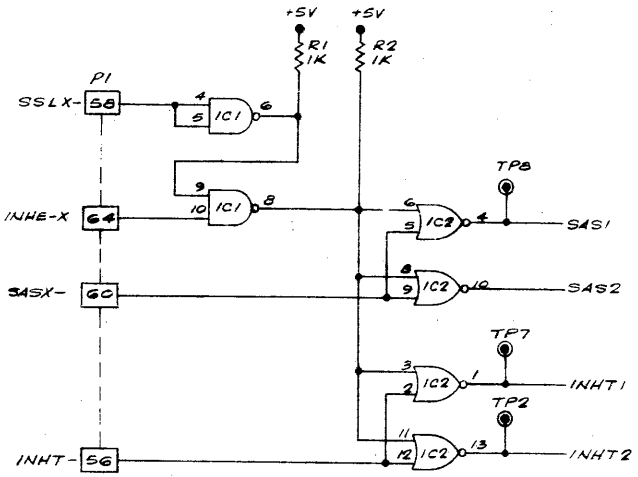

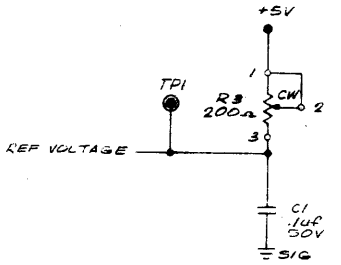

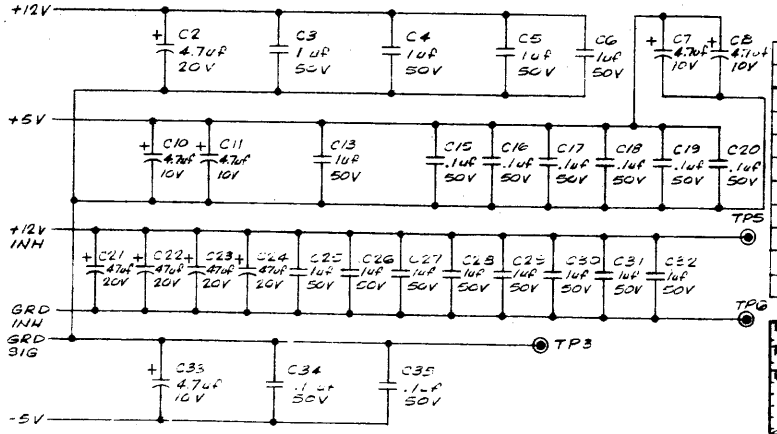

5. VALUE FOR INDICATED RESISTORS IS: FOR 44P0506-000 ASSY 2.2K OHMS FOR 44P0506-001 ASSY 4.3 OHMS

4. POWER DISTRIBUTION TO IC1 THRU IC12: PIN 7 - GRD PIN 14 - +5V
3. PREFIX COMPONENT REF DESIG NO. WITH CIRCUIT NUMBER EXAMPLE: CKT 1 - R101, R102 CKT 2 - R201, R202.
2. COMPONENT VALUE TO BE DETERMINED IF FINAL P.C.
1. ALL RESISTOR VALUES ARE IN OHMS, 1/4 W, ±5%.

NOTE: UNLESS OTHERWISE SPECIFIED

REFERENCE DESIGNATIONS	
LAST USED	NOT USED
C35, C1104	C9,12,14
R21, R1817	
CR1205	
IC12, IC1101	
Q1204	
A1203	
TP8	
P1	
J1	

REFERENCE DRAWINGS	
40D0454	P.W. BOARD
44E0506	ASSEMBLY
44P0506	PARTS LIST
97D0533	ARTWORK
97D0555	SILKSCREEN
97D0556	SOLDER MASK

91D0285 E

DRAWING NO.	620/L	
PART NO.	44E0506	
MATERIAL		
FINISH		

TOLERANCES UNLESS OTHERWISE SPECIFIED: X ±1, XX ±.03, XXX ±.010, ANGLES ±0.5°
BREAK ALL SHARP EDGES .005 R APPROX
DO NOT SCALE DRAWING

DR	D. Wilson	1/19/71
CHK	K. Nilsen	1/19/71
ENGR	J. Blair	2/1/71
APVD		2-8-71
APVD		

THIS DRAWING AND CONTENTS ARE THE PROPERTY OF XEROX DATA SYSTEMS AND ARE LOANED SUBJECT TO THE AGREEMENT THAT NEITHER THEY NOR THE INFORMATION THEREON WILL BE REPRODUCED OR DISCLOSED WITHOUT WRITTEN PERMISSION FROM XDS

XEROX DATA SYSTEMS

TITLE: LOGIC DIAG SEN INH DM288

CODE IDENT NO.	SIZE	DWG NO.	REV
21101	D	91D0285	E

SCALE NONE | SHEET 1 OF 4

WIRE LIST			
FROM	TO	FIND NO.	COLOR
E5	2-1	15	WHT
E6	2-3	15	WHT
E3	1-2	15	WHT
1-3	1-2	15	WHT
E2	P1-A	17	RED
E4	P1-C	17	BRN
E8	P1-D	17	ORG
E7	2-2	15	WHT
E1	1-1	15	WHT

REVISIONS				
SYM	ZONE	DESCRIPTION	APPROVED	DATE
A		PRODUCTION RELEASE PER EN 5364	[illegible]	[illegible]
—	JM	ADDED TO WIRE LIST PER EN 5550	[illegible]	[illegible]
B	JM	8.50±.25 WAS 4.75±.25 PER EN 5884	[illegible]	[illegible]
C	[illegible]	ADDED FIND NO. 20 TO F/D ZONE C7 PER EN 80184	[illegible]	[illegible]

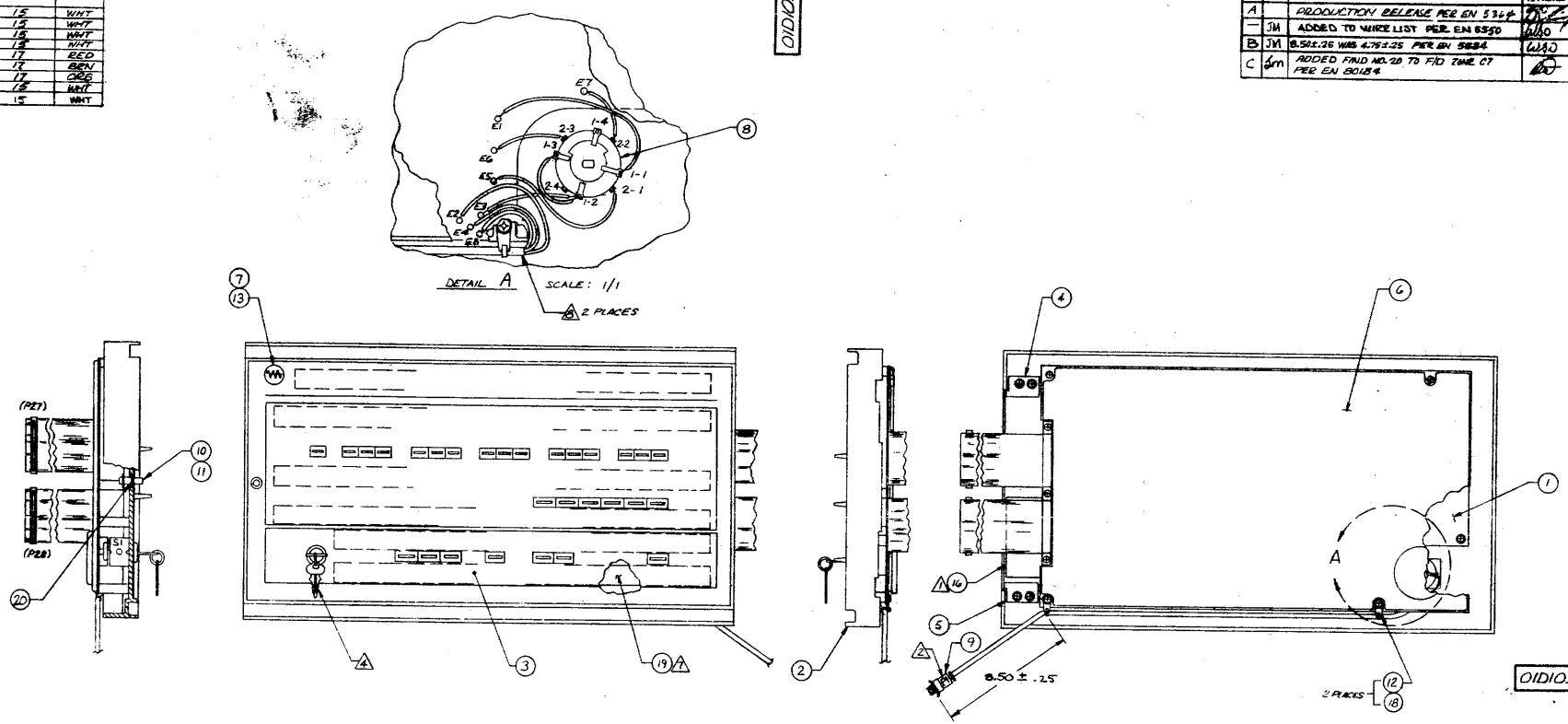

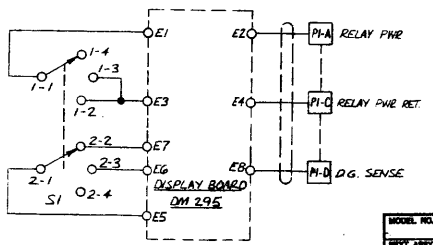

SCHEMATIC

8. CUT SHIELD BACK FLUSH WITH INSULATION, TYP BOTH ENDS
7. APPLY TAPE (FIND NO 19) BETWEEN FIND NOS. 2 & 3 AS REQD.
6. SPOT TIE AS REQUIRED.
5. ROUTING OF WIRES IS SHOWN FOR REFERENCE ONLY.
4. BAG KEYS (PART OF F/N 8) AND ATTACH SECURELY TO ASSEMBLY.
3. USE HARDWARE IN ACCORDANCE WITH 98A0536.
2. "P1" REFERENCE DESIGNATION SHOWN FOR INFORMATION ONLY AND DOES NOT APPEAR ON PART
1. MARK PART NO. 01P1036-000 & THE REV. LETTER OF THE PARTS LIST TO WHICH THE PART WAS MANUFACTURED & SERIAL NO. OF ASSEMBLY IN .12 HIGH CHARACTERS ON FIND NO. 16; ATTACH TO FIND NO. 2 APPROX WHERE SHOWN.

NOTE: UNLESS OTHERWISE SPECIFIED

FOR PARTS LIST SEE 01P1036

MODEL NO. 620/L	DIMENSIONS ARE IN INCHES AND AFTER FINISHING	DR KIUSSIS 1/14/71	varian data machines /a varian subsidiary 2722 michelson drive / irvine / california, 92664
NEXT ASSY 01E1035	TOLERANCES (UNLESS OTHERWISE SPECIFIED) .X ± .1 .XX ± .03 .XXX ± .010 ANGLES ± 0.5°	CHK RAD 3/1/71	TITLE FRONT PANEL ASSY
MATERIAL		DSGN KIUSSIS 1/14/71	
		ENGR J. MARSH 3/15/71	
		APPD [illegible] 3/15/71	
FINISH	BREAK ALL SHARP EDGES .010 R APPROX	APPD [illegible] 3/18/71	
	DO NOT SCALE DRAWING	THIS DOCUMENT MAY CONTAIN PROPRIETARY INFORMATION AND SUCH INFORMATION MAY NOT BE DISCLOSED TO OTHERS FOR ANY PURPOSE OR USED TO PRODUCE THE ARTICLE OR SUBJECT, WITHOUT WRITTEN PERMISSION FROM VDM	CODE IDENT NO. 21101 · SIZE D · DWG NO 01D1036 · REV C
			SCALE 1/2 · SHEET 1 OF 1

REVISIONS				
SYM	ZONE	DESCRIPTION	APPROVED	DATE
A		PRODUCTION RELEASE PER EN 5649	[illegible]	1/1/68
B	JE	REVISED PER EN [illegible]	[illegible]	3/6/73
C	SM	ADDED CABLE CLAMP AND SERVICE LOOP PER E.N. 5584	[illegible]	4/4/73
D	SM	ZONE OF REVISED VIEW OF WIRING CADED (ITEM 2) ADJUST DESIRED VIEW E ZONE E3 PER EN 80106	[illegible]	4/4/73
E		REVISED PER EN 80413	[illegible]	5/4/73
–		REVISED PER EN 80417	[illegible]	5/4/73
F		REVISED PER EN 80495	[illegible]	9/4/73
–	GRL	ADDED -005 VERSION PER EN 81072	[illegible]	10/1/73
G	GRL	ADDED -004 VERSION AND REVISED CABLE ROUTING IN VIEW B-B PER EN 71731	[illegible]	11/1/73
H	JE	REVISED PER EN 81728	[illegible]	11/1/73

WIRE LIST		
FROM	TO	COLOR
J31-1	J17-113	PURPLE
J31-2	J17-112	GREEN
J31-3	J17-114	YELLOW

SECTION A-A
ROTATED CW 90°

B (SEE SH 2)

VIEW E-E
OIPIO35-004

VIEW E-E
ROTATED CW 90°

NOTE: FRONT PANEL ASSY OMITTED FROM THIS SHEET FOR CLARITY. SEE SHEET 2 FOR INSTALLATION OF FRONT PANEL ASSY.

TABULATION BLOCK		
VDM PART NO.	DESCRIPTION	NEXT ASSY
G P1035-000	FRAME ASSY, 16 BIT	01D1034 01A 004
~~GHE1035-001~~	~~FRAME ASSY, 16 BIT~~	
01P1035-002	FRAME ASSY 16 BIT	01A1277
01P1035-003	FRAME ASSY, 16 BIT	1P14 G7
01P1035-004	FRAME ASSY, 16 BIT WITHOUT FRONT PANEL	01P 497

FOR PARTS LIST, SEE 01P1035

6 MODIFY P/N 3 WIRING FOR 01P1035-004 VERSION ONLY PER WIRE LIST 95WC985 USING E.N. 56.

~~4 CABLE CLAMP (ITEM NO. 5) TO BE INSTALLED ON HINGE WITH FLAT SIDE UP (OPPOSITE TO MARKER IN WHICH INSTALLED ON FRONT PANEL DISPLAY BOARD)~~

3 WHERE PART NO. 01P1035-(OPTION) IS REVISED PER LTR. OF THE SHEETS LIST TO WHICH THE PART WAS MANUFACTURED APPLY WHERE SPACE IN IDENTIFICATION TO BE 12 HIGH CHARACTERS & PERMANENT.

2 TERMINATE J17 END OF WIRE WITH ITEM 32. COVER WITH ITEM 42 APPROX .75 LONG AFTER INSTALLATION TO CONNECTOR PLATE.

1 INSTALL CABLEGUIDES (ITEM 33) TO MATCH CONNECTORS ON CONNECTOR PLATE (ITEM 1) PRIOR TO INSTALLATION OF CONNECTOR PLATE.

! USE HARDWARE IN ACCORDANCE WITH 98A05836

NOTE: UNLESS OTHERWISE SPECIFIED

DRAWN	[illegible]	6/20/73	data general corporation, A rolm subsidiary, [illegible]
CHK	[illegible]	6/21/73	
ENGR	[illegible]	6/20/73	TITLE: FRAME ASSEMBLY
APPD	[illegible]	6/21/73	
APPD	[illegible]	6/21/73	

THIS DOCUMENT MAY CONTAIN PROPRIETARY INFORMATION AND SUCH INFORMATION MAY NOT BE DISCLOSED TO OTHERS FOR ANY PURPOSE OR USED TO PRODUCE THE ARTICLE OR SUBJECT, WITHOUT WRITTEN PERMISSION FROM YOU

CODE IDENT NO.	SIZE	DWG NO	REV
21101	E	01E1035	J

SCALE 1/1 SHEET 1 OF 2

01E1035 J

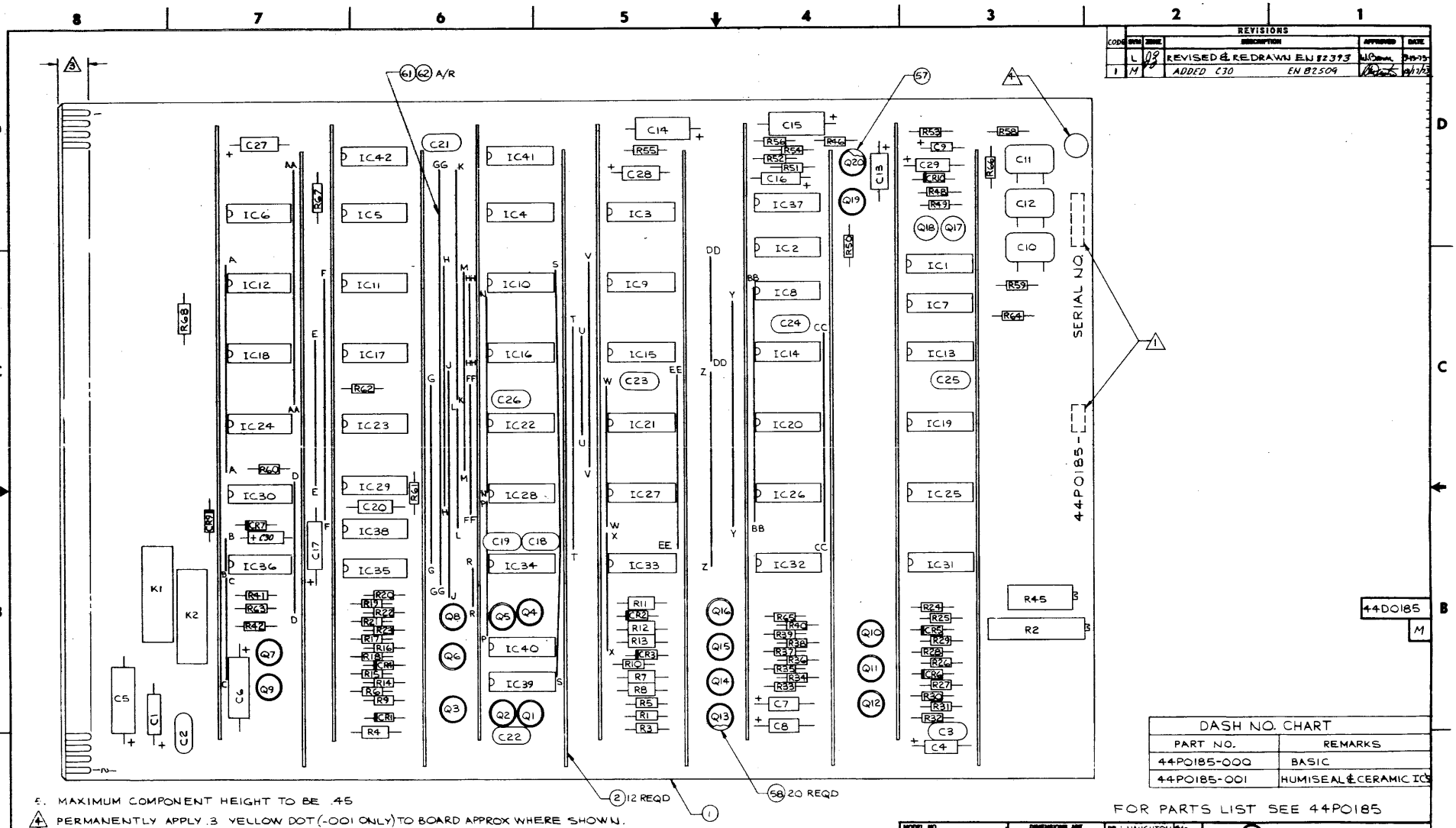

REVISIONS					
CODE	SHT#	ZONE	DESCRIPTION	APPROVED	DATE
	L	08	REVISED & REDRAWN EN #2393		9-8-75
1	M		ADDED C30 EN #2509		9/1/76

DASH NO. CHART	
PART NO.	REMARKS
44P0185-000	BASIC
44P0185-001	HUMISEAL & CERAMIC ICS

FOR PARTS LIST SEE 44P0185

5. MAXIMUM COMPONENT HEIGHT TO BE .45

4. PERMANENTLY APPLY .3 YELLOW DOT (-001 ONLY) TO BOARD APPROX WHERE SHOWN.

3. AFTER TEST AND PRIOR TO ACCEPTANCE TEST (-001 ONLY) MASK OFF CONNECTOR CONTACT AREA ON BOTH SIDES OF F/N 1. TOTALLY COAT BOTH SIDES OF ASSY WITH F/N 74.

2. FOR ENGR DESCR OF REAL TIME CLOCK OPTION (620i-13) SEE DWG 98A0116.

1. MARK PART WITH REVISION LETTER OF THE PARTS LIST TO WHICH THE PART WAS MANUFACTURED, AND SERIAL NUMBER, APPROXIMATELY WHERE SHOWN. IDENTIFICATION TO BE .12 HIGH CHARACTERS. PERMANENT & LEGIBLE.

NOTE: UNLESS OTHERWISE SPECIFIED

REFERENCE DRAWINGS

97D0642	SILKSCREEN
97D0641	SOLDER MASK
44P0185	PARTS LIST
40D0201	BOARD DETAIL
97D0134	PHOTOMASTER
95D0135	LOGIC DIAGRAM

MODEL NO. G20i-13/14
NEXT ASSY
MATERIAL
FINISH

DIMENSIONS ARE IN INCHES AND AFTER FINISHING
TOLERANCES UNLESS OTHERWISE SPECIFIED
X ±.1
.XX ±.02
.XXX ±.010
ANGLES ±0.5°
BREAK ALL SHARP EDGES .010 R APPROX
DO NOT SCALE DRAWING

DR J. NAUGHTON 6/15/76
CHK J. EVERS 6/28/76
DSGN J. NAUGHTON 6/15/76
ENGR T. E. HANSON 7/1/76
APPD
APPD

THIS DOCUMENT MAY CONTAIN PROPRIETARY INFORMATION AND SUCH INFORMATION MAY NOT BE DISCLOSED TO OTHERS FOR ANY PURPOSE OR USED TO PRODUCE THE ARTICLE OR SUBJECT, WITHOUT WRITTEN PERMISSION FROM VDM

varian data machines
2722 michelson drive / irvine / california / 92664

TITLE: ASSEMBLY DM123-3 PF/R AND RTC

CODE IDENT NO. 21101 | SIZE D | DWG NO 44D0185 | REV M

SCALE | SHEET 1 OF 1

44-D0521 C

REVISIONS				
ZONE	LTR	DESCRIPTION	APPROVED	DATE
A		PRODUCTION RELEASE EN 5428		
B		MODEL NO. WAS 620T PER EN 80337		
C		ADDED A1 AND A2 PER EN 81514		

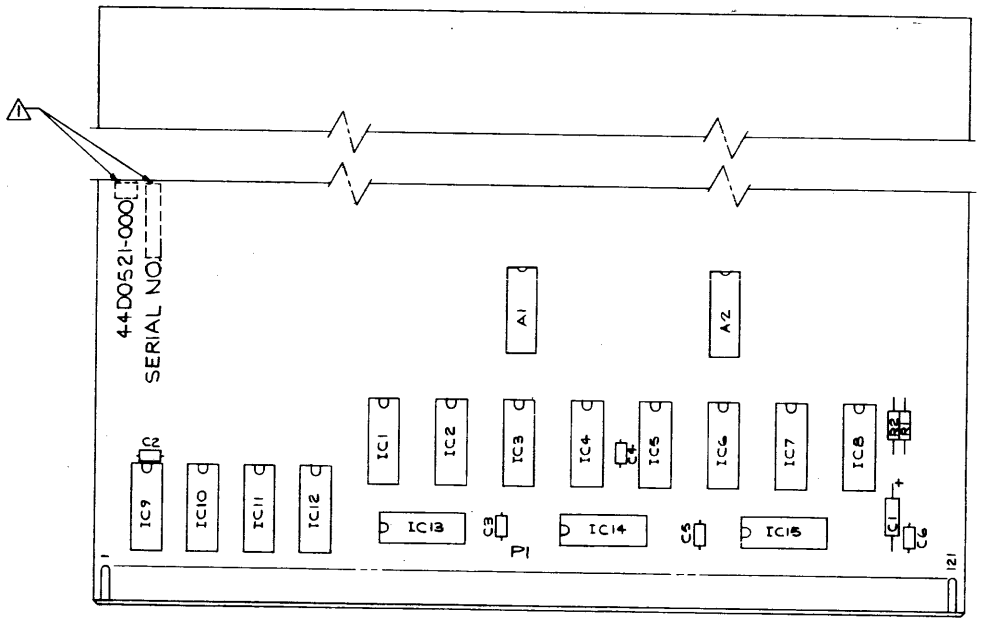

44-D0521 B C

FOR PARTS LIST SEE 44P0521

REFERENCE DRAWINGS

40D0469	BOARD DETAIL
91D0297	LOGIC DIAGRAM
97D0566	ARTWORK
97D0567	SILKSCREEN
97D0568	SOLDER MASK

⚠ MARK REVISION LETTER OF THE PARTS LIST TO WHICH THE PART WAS MANUFACTURED AND THE SERIAL NUMBER OF THE ASSEMBLY APPROX WHERE SHOWN. IDENTIFICATION TO BE .12 HIGH CHARACTERS AND PERMANENT.

NOTE: UNLESS OTHERWISE SPECIFIED

MODEL NO. 620 L
NEXT ASSY 01P1101
MATERIAL
FINISH

BREAK ALL SHARP EDGES .005 R APPROX

DO NOT SCALE DRAWING

TITLE
MEMORY BUFFER
BOARD ASSY

CAGE IDENT NO.	SIZE	DWG NO	REV
21101	D	44-D0521	C

SCALE 2/1 SHEET 1 OF 1

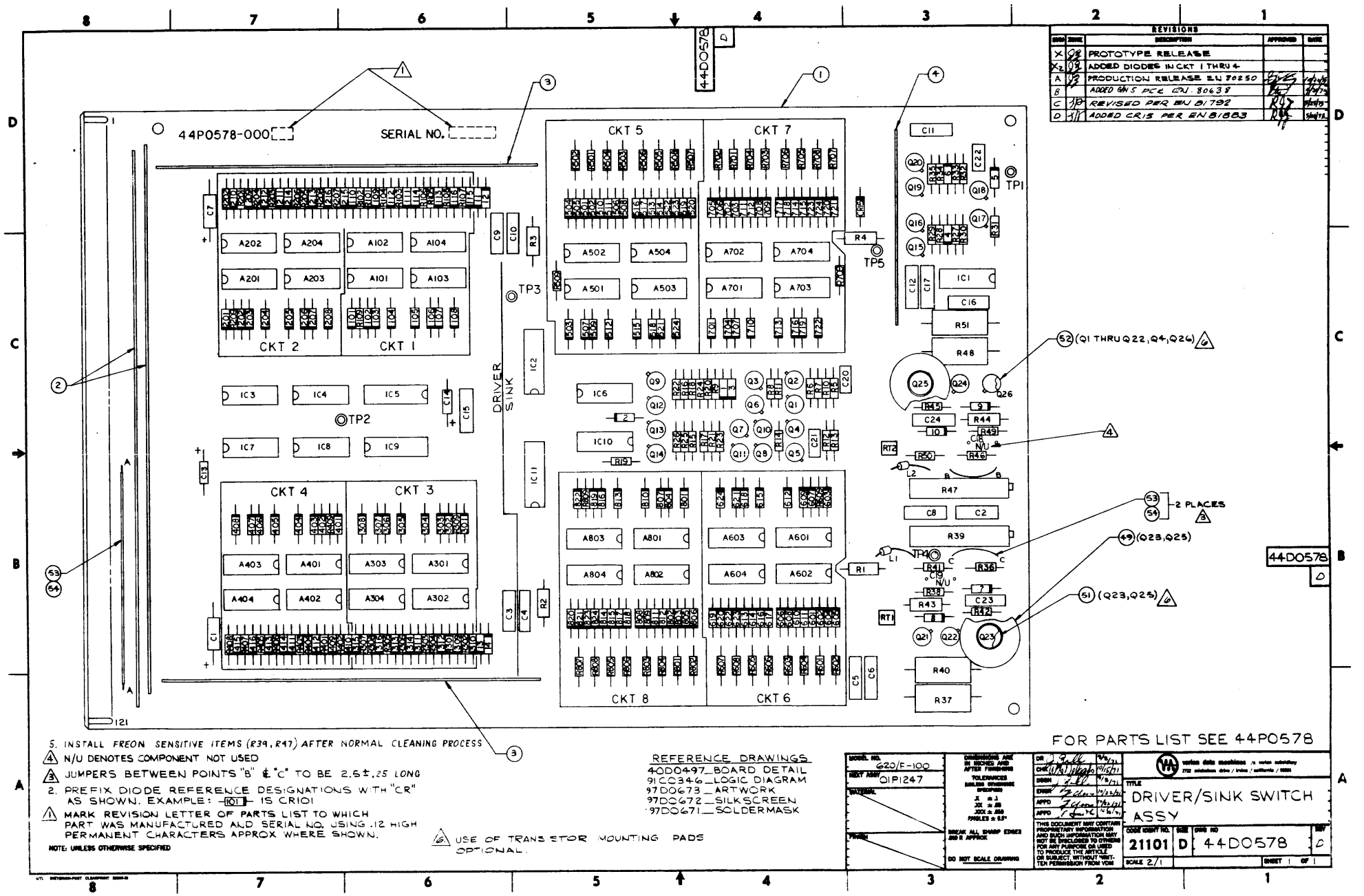

REVISIONS				
ZONE	REV	DESCRIPTION	APPROVED	DATE
	X	PROTOTYPE RELEASE		
	X_2	ADDED DIODES IN CKT 1 THRU 4		
	A	PRODUCTION RELEASE E.N. 80250		
	B	ADDED GN'S PCL GN. 80638		
	C	REVISED PER EN 81792		
	D	ADDED CR15 PER EN 81883		

5. INSTALL FREON SENSITIVE ITEMS (R39, R47) AFTER NORMAL CLEANING PROCESS

4 N/U DENOTES COMPONENT NOT USED

3 JUMPERS BETWEEN POINTS "B" & "C" TO BE 2.5±.25 LONG

2. PREFIX DIODE REFERENCE DESIGNATIONS WITH "CR" AS SHOWN. EXAMPLE: CR101 IS CR101

1 MARK REVISION LETTER OF PARTS LIST TO WHICH PART WAS MANUFACTURED AND SERIAL NO. USING .12 HIGH PERMANENT CHARACTERS APPROX WHERE SHOWN.

NOTE: UNLESS OTHERWISE SPECIFIED

6 USE OF TRANSISTOR MOUNTING PADS OPTIONAL.

FOR PARTS LIST SEE 44P0578

REFERENCE DRAWINGS
40D0497_BOARD DETAIL
91C0346_LOGIC DIAGRAM
97D0673_ARTWORK
97D0672_SILKSCREEN
97D0671_SOLDERMASK

MODEL NO.	620/F-100
NEXT ASSY	01P1247
MATERIAL	
FINISH	
DIMENSIONS ARE IN INCHES AND AFTER FINISHING	TOLERANCES UNLESS OTHERWISE SPECIFIED: X ± .1, .XX ± .05, .XXX ± .010, ANGLES ± 0.5°
BREAK ALL SHARP EDGES .005 R APPROX	DO NOT SCALE DRAWING
DR	9/3/71
CHK	10/5/71
DSGN	9/3/71
ENGR	9/24/71
APPD	9/24/71
APPD	10/4/71

THIS DOCUMENT MAY CONTAIN PROPRIETARY INFORMATION AND SUCH INFORMATION MAY NOT BE DISCLOSED TO OTHERS FOR ANY PURPOSE OR USED TO PRODUCE THE ARTICLE OR SUBJECT, WITHOUT WRITTEN PERMISSION FROM VDM

varian data machines / a varian subsidiary
2722 michelson drive / irvine / california / 92664

TITLE: DRIVER/SINK SWITCH ASSY

CODE IDENT NO.	SIZE	DWG NO	REV
21101	D	44D0578	D

SCALE 2/1 SHEET 1 OF 1

REVISIONS				
SYM	ZONE	DESCRIPTION	APPROVED	DATE
X	JJ	PROTOTYPE RELEASE		
X2	CW	REVISED NOTE 1 & ADDED NOTE 2	T.E. Hanson	10-21-71
X3	CW	MOVED CR6	T.E. Hanson	1-13-72
A		PRODUCTION RELEASE EN 80371	JH	1/13/72

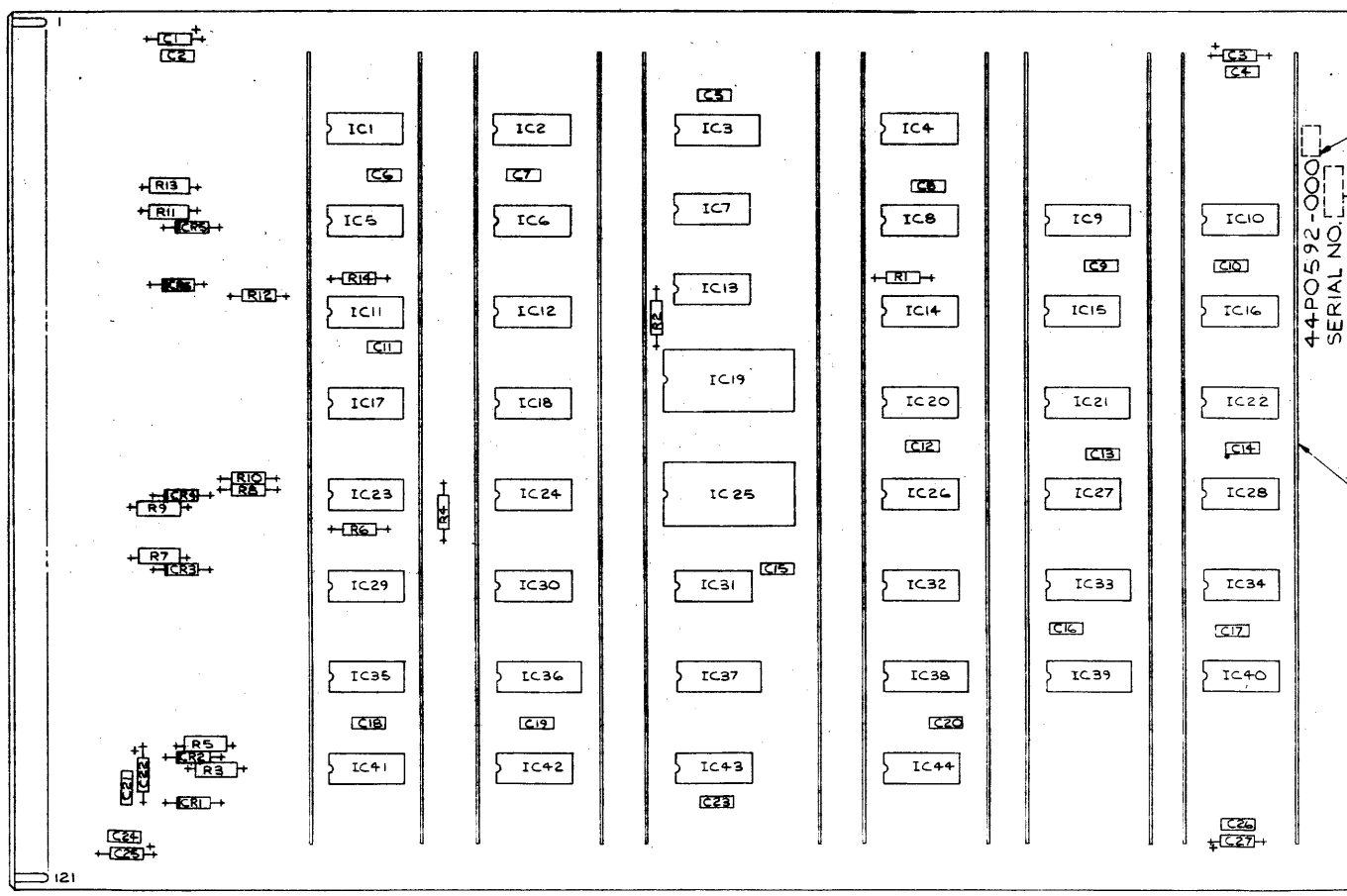

FOR PARTS LIST SEE 44P0592

REFERENCE DRAWINGS

40D0505	PW BOARD
97D0696	SOLDER MASK
97D0695	SILKSCREEN
97D0694	ARTWORK
91D0356	LOGIC DIAGRAM

2 MARK SERIAL NO. WHERE SHOWN USING .12 HIGH PERMANENT CHARACTERS.

1 MARK REVISION LETTER OF PARTS LIST TO WHICH PART WAS MANUFACTURED APPROX. WHERE SHOWN. IDENTIFICATION TO BE .12 HIGH CHARACTERS AND PERMANENT.

NOTE: UNLESS OTHERWISE SPECIFIED

MODEL NO. 620/L-100
NEXT ASSY CIP1277
MATERIAL
FINISH

DIMENSIONS ARE IN INCHES AND AFTER FINISHING
TOLERANCES UNLESS OTHERWISE SPECIFIED
.X ± .1
.XX ± .03
.XXX ± .010
ANGLES ± 0.5°
BREAK ALL SHARP EDGES .010 R APPROX
DO NOT SCALE DRAWING

DR	J. Bell	11/18/71
CHK	[illegible]	1/12/72
DSGN	J. Bell	11/18/71
ENGR	T.E. Hanson	1-13-72
APPD	[illegible]	1-13-72
APPD		

THIS DOCUMENT MAY CONTAIN PROPRIETARY INFORMATION AND SUCH INFORMATION MAY NOT BE DISCLOSED TO OTHERS FOR ANY PURPOSE OR USED TO PRODUCE THE ARTICLE OR SUBJECT WITHOUT WRITTEN PERMISSION FROM VDM

varian data machines a varian subsidiary
7722 wickerson drive / irvine / california / 92664

TITLE
REGISTER CARD
ASSY DM336

CODE IDENT NO.	SIZE	DWG NO	REV
21101	D	44D0592	A

SCALE 2/1 SHEET OF

CAUTION: EN 82268
AFFECTS THIS DWG.

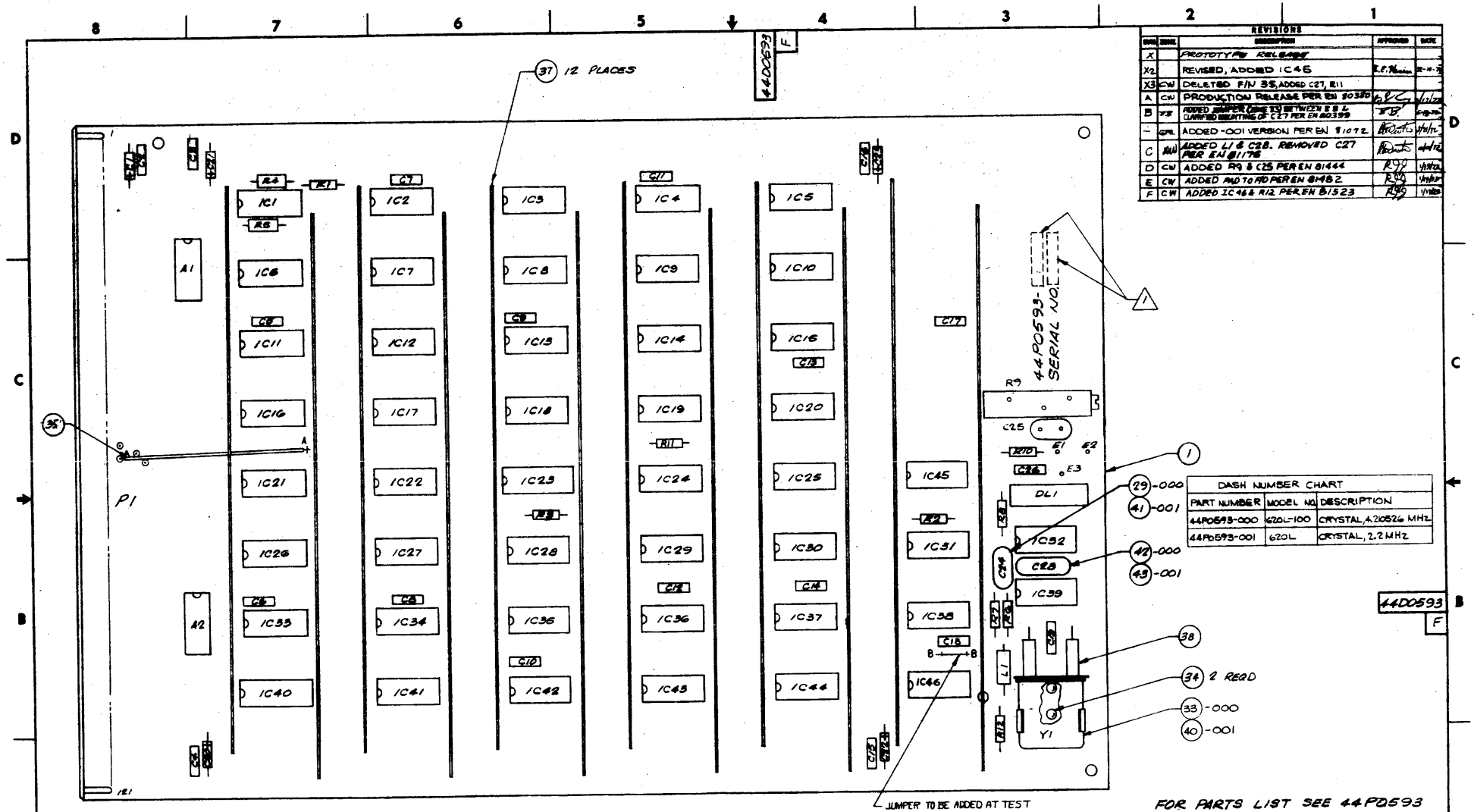

REVISIONS				
DASH	ENGR.	DESCRIPTION	APPROVED	DATE
X		PROTOTYPE RELEASE		
X2		REVISED, ADDED IC46		
X3	CW	DELETED P/N 35, ADDED C27, E11		
A	CW	PRODUCTION RELEASE PER EN 80380		
B	PB	ADDED JUMPER (WIRE TO BE TWEEN E & L CLARIFIED MOUNTING OF C27 PER EN 80399		
--	GPL	ADDED -001 VERSION PER EN 81072		
C	MW	ADDED L1 & C28. REMOVED C27 PER EN 81176		
D	CW	ADDED R9 & C25 PER EN 81444		
E	CW	ADDED A1 TO A2 PER EN 81482		
F	CW	ADDED IC46 & R12 PER EN 81523		

DASH NUMBER CHART		
PART NUMBER	MODEL NO.	DESCRIPTION
44P0593-000	620L-100	CRYSTAL, 4.20526 MHz
44P0593-001	620L	CRYSTAL, 2.2 MHz

FOR PARTS LIST SEE 44P0593

REFERENCE DRAWINGS

4000606 — PW BOARD
9100357 — LOGIC DIAGRAM
9700697 — ARTWORK
9700698 — SILKSCREEN
9700699 — SOLDER MASK

~~2. NOTATION N/U DENOTES COMPONENT NOT USED~~

1. MARK APPROPRIATE DASH NUMBER AND THE REVISION LETTER OF THE PARTS LIST TO WHICH THE PART WAS MANUFACTURED AND SERIAL NO. APPROXIMATELY WHERE SHOWN. IDENTIFICATION TO BE .12 HIGH CHARACTERS, PERMANENT AND LEGIBLE.

NOTE: UNLESS OTHERWISE SPECIFIED

MODEL NO.	620L-100
NEXT ASSY	01A1277
MATERIAL	
FINISH	

DO NOT SCALE DRAWING

DRN J. W. [illegible] 9/11/71
CHK W. M. D. 9/11/71
ENGR [illegible] 9/11/71
APPD [illegible]
APPD [illegible]

TITLE: PROCESSOR CONTROL NO. 4 ASSY DM357

CODE IDENT NO.	SIZE	DWG NO.	REV
21101	D	44D0593	F

SCALE 1/1 SHEET 1 OF 1

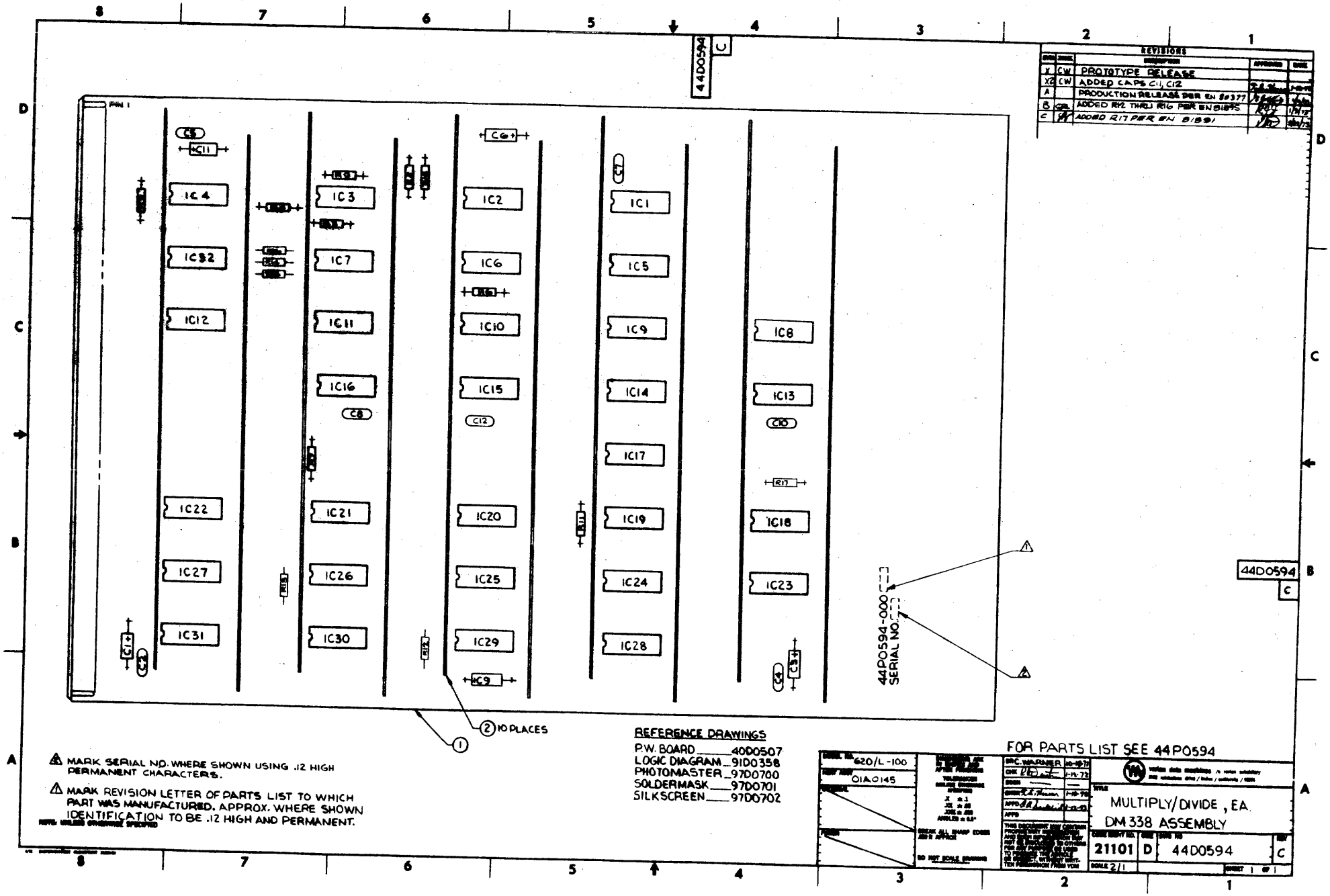

REVISIONS
X CW PROTOTYPE RELEASE
X2 CW ADDED CAPS C11, C12
A PRODUCTION RELEASE PER EN 80377
B ADDED R12 THRU R16 PER EN 81895
C ADDED R17 PER EN 81891
44D0594 C
PIN 1
IC4
IC32
IC12
IC22
IC27
IC31
IC3
IC7
IC11
IC16
IC21
IC26
IC30
IC2
IC6
IC10
IC15
IC20
IC25
IC29
IC1
IC5
IC9
IC14
IC17
IC19
IC24
IC28
IC8
IC13
IC18
IC23
44P0594-000
SERIAL NO.
2 10 PLACES
1
MARK SERIAL NO. WHERE SHOWN USING .12 HIGH PERMANENT CHARACTERS.
MARK REVISION LETTER OF PARTS LIST TO WHICH PART WAS MANUFACTURED. APPROX. WHERE SHOWN IDENTIFICATION TO BE .12 HIGH AND PERMANENT.
NOTE: UNLESS OTHERWISE SPECIFIED
REFERENCE DRAWINGS
P.W. BOARD 40D0507
LOGIC DIAGRAM 91D0358
PHOTOMASTER 97D0700
SOLDERMASK 97D0701
SILKSCREEN 97D0702
FOR PARTS LIST SEE 44P0594
620/L-100
01A0145
C. WARNER
MULTIPLY/DIVIDE, EA.
DM 338 ASSEMBLY
21101
D
44D0594
C
SCALE 2/1
SHEET 1 OF 1

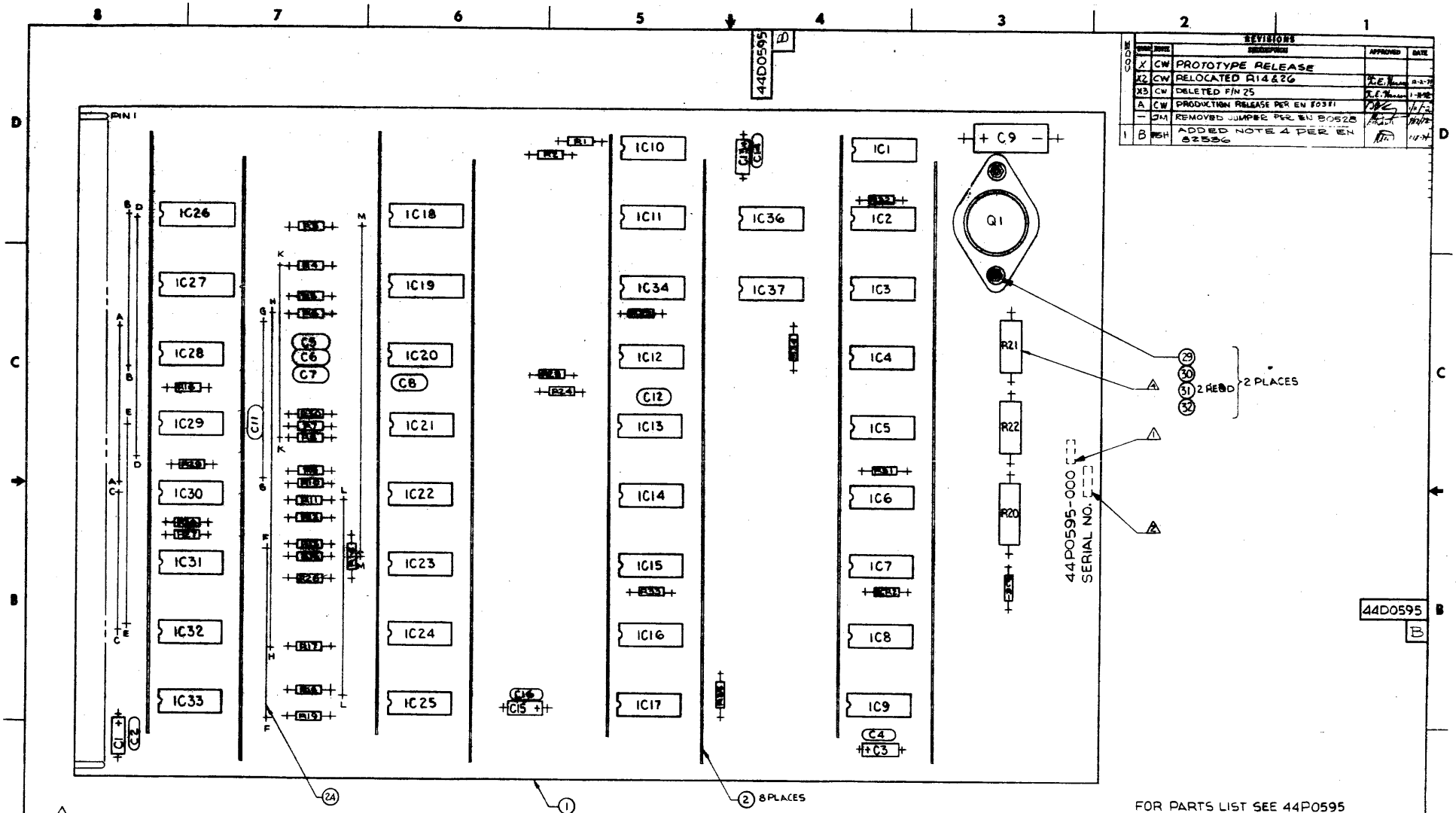

REVISIONS					
MOD	ZONE		DESCRIPTION	APPROVED	DATE
	X	CW	PROTOTYPE RELEASE	K.E.W.	12-2-71
	X2	CW	RELOCATED R14 & 26	K.E.W.	1-11-72
	X3	CW	DELETED F/N 25	K.E.W.	1-19-72
	A	CW	PRODUCTION RELEASE PER EN 80371		1/6/72
	—	JM	REMOVED JUMPER PER EN 80528		10/12/72
1	B	WSH	ADDED NOTE 4 PER EN 82536		11/1/74

4 DELAY INSERTION OF R21 UNTIL AFTER CLEANING IN FREON.
3. MOUNT R20, R21, & R22 .06 OFF OF BOARD
2. MARK SERIAL NO. WHERE SHOWN USING .12 HIGH PERMANENT CHARACTERS.
1 MARK REVISION LETTER OF PARTS LIST TO WHICH PART WAS MANUFACTURED. APPROX. WHERE SHOWN, IDENTIFICATION TO BE .12 HIGH CHARACTERS & PERMANENT.

NOTE: UNLESS OTHERWISE SPECIFIED

REFERENCE DRAWINGS
LOGIC DIAGRAM - - - 91D0359
PHOTOMASTER - - - - 97D0703
BOARD DETAIL - - - - 40D0508

SOLDERMASK - - - - 97D0705
SILKSCREEN - - - - 97D0704

FOR PARTS LIST SEE 44P0595

MODEL NO.	620/L-100	DR C. WARNER	10-12-71
NEXT ASSY	01A1277	CHK	1/6/72
MATERIAL		DSGN	
FINISH		ENGR K.E.W.	1-11-72
		APPD	
		APPD	

DIMENSIONS ARE IN INCHES AND AFTER FINISHING
TOLERANCES UNLESS OTHERWISE SPECIFIED
X ± .1
.XX ± .05
.XXX ± .010
ANGLES ± 0.5°
BREAK ALL SHARP EDGES .010 R APPROX
DO NOT SCALE DRAWING

THIS DOCUMENT MAY CONTAIN PROPRIETARY INFORMATION AND SUCH INFORMATION MAY NOT BE DISCLOSED TO OTHERS FOR ANY PURPOSE OR USED TO PRODUCE THE ARTICLE OR SUBJECT, WITHOUT WRITTEN PERMISSION FROM VDM

varian data machines / a varian subsidiary
2722 michelson drive / irvine / california / 92664

TITLE
PROCESSOR CONTROL NO 1.
DM 339 - ASSEMBLY

CODE IDENT NO.	SIZE	DWG NO	REV
21101	D	44D0595	B

SCALE 2/1 SHEET 1 OF 1

44D0595
B

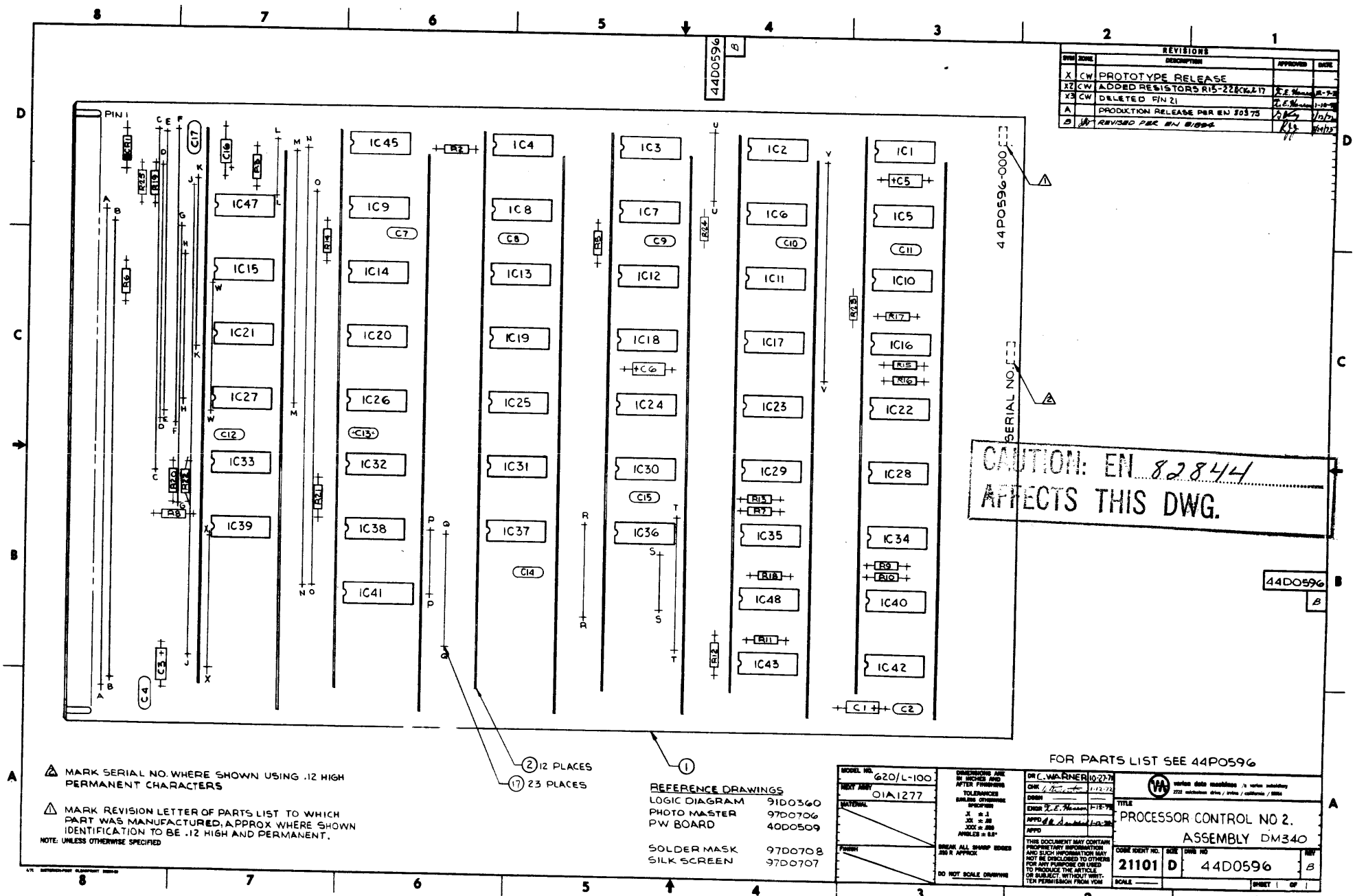

REVISIONS				
SYM	ZONE	DESCRIPTION	APPROVED	DATE
X	CW	PROTOTYPE RELEASE		
X2	CW	ADDED RESISTORS R15-22 ECN 2217		
X3	CW	DELETED P/N 21		
A		PRODUCTION RELEASE PER EN 80375		
B		REVISED PER EN 81694		

⚠ MARK SERIAL NO. WHERE SHOWN USING .12 HIGH PERMANENT CHARACTERS

⚠ MARK REVISION LETTER OF PARTS LIST TO WHICH PART WAS MANUFACTURED; APPROX WHERE SHOWN IDENTIFICATION TO BE .12 HIGH AND PERMANENT.

NOTE: UNLESS OTHERWISE SPECIFIED

REFERENCE DRAWINGS

LOGIC DIAGRAM	91D0360
PHOTO MASTER	97D0706
PW BOARD	40D0509
SOLDER MASK	97D0708
SILK SCREEN	97D0707

MODEL NO.	620/L-100
NEXT ASSY	01A1277
MATERIAL	
FINISH	

DIMENSIONS ARE IN INCHES AND AFTER FINISHING. TOLERANCES UNLESS OTHERWISE SPECIFIED: X ± .1, XX ± .02, XXX ± .005, ANGLES ± 0.5°. BREAK ALL SHARP EDGES .010 R APPROX. DO NOT SCALE DRAWING.

DR	C. WARNER	10-27-71
CHK		11-12-71
DSGN		
ENGR	D.E. Hanson	11-15-71
APPD	D.E. Hanson	11-30-71
APPD		

THIS DOCUMENT MAY CONTAIN PROPRIETARY INFORMATION AND SUCH INFORMATION MAY NOT BE DISCLOSED TO OTHERS FOR ANY PURPOSE OR USED TO PRODUCE THE ARTICLE OR SUBJECT, WITHOUT WRITTEN PERMISSION FROM VDM

varian data machines / a varian subsidiary
2722 michelson drive / irvine / california / 92664

TITLE: PROCESSOR CONTROL NO 2. ASSEMBLY DM340

CODE IDENT NO.	SIZE	DWG NO	REV
21101	D	44D0596	B

SCALE — SHEET 1 OF 1

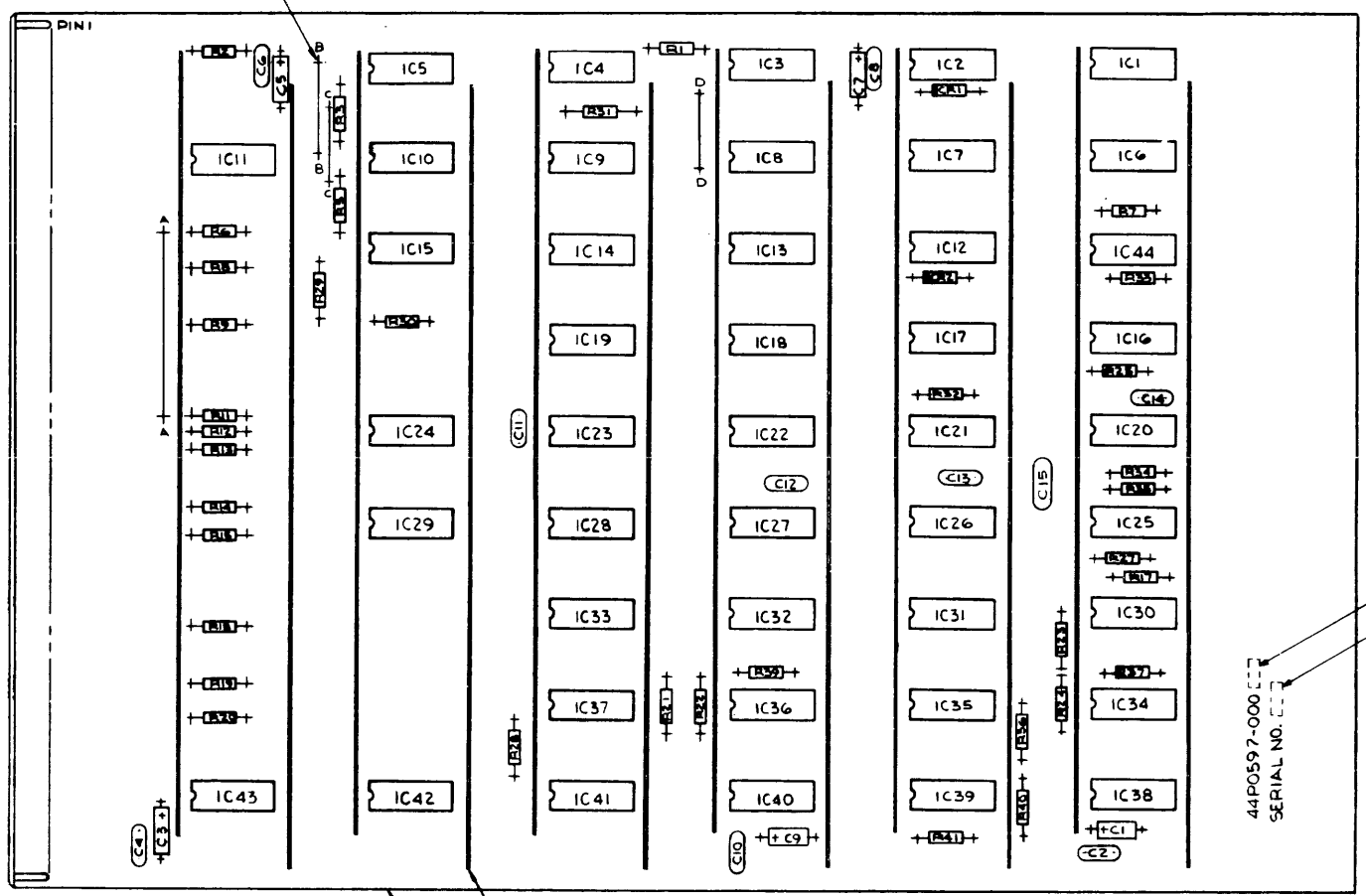

REVISIONS				
SYM	ZONE	DESCRIPTION	APPROVED	DATE
X	C.W.	PROTOTYPE RELEASE		
X2		ADDED IC44		
X3		DELETED R26		
X4		DELETED F/N 4		
A		PRODUCTION RELEASE PER EN 80376		
—		DELETED R38 PER EN 80513		
B		ADDED C15 PER EN 80832		

FOR PARTS LIST SEE 44P0597

REFERENCE DRAWINGS

BOARD DETAIL	40D0510
PHOTO MASTER	97D0709
LOGIC DIAGRAM	91D0361
SOLDER MASK	97D0711
SILK SCREEN	97D0710

2 MARK SERIAL NO. WHERE SHOWN, USING .12 HIGH PERMANENT CHARACTERS.

1 MARK REVISION LETTER OF PARTS LIST TO WHICH PART WAS MANUFACTURED. APPROX. WHERE SHOWN IDENTIFICATION TO BE .12 CHARACTERS AND PERMANENT.

NOTE: UNLESS OTHERWISE SPECIFIED

MODEL NO. 620/L-100
KEY ASSY 01A1277
MATERIAL
FINISH

DIMENSIONS ARE IN INCHES AND AFTER FINISHING
TOLERANCES UNLESS OTHERWISE SPECIFIED
.X ± .1
.XX ± .03
.XXX ± .010
ANGLES ± 0.5°
BREAK ALL SHARP EDGES .005 R APPROX
DO NOT SCALE DRAWING

DR C. WARNER 10-19-71
CHK 1-12-72
ENGR 1-12-72
APPD 1-12-72
APPD

THIS DOCUMENT MAY CONTAIN PROPRIETARY INFORMATION AND SUCH INFORMATION MAY NOT BE DISCLOSED TO OTHERS FOR ANY PURPOSE OR USED TO PRODUCE THE ARTICLE OR SUBJECT WITHOUT WRITTEN PERMISSION FROM VDM

varian data machines / a varian subsidiary
2222 walsh ave. drive / bolton / mass / 02804

TITLE
PROCESSOR CONTROL NO.3
DM341 ASSEMBLY

CODE IDENT NO.	SIZE	DWG NO	REV
21101	D	44D0597	B

SCALE 2/1 SHEET 1 OF 1

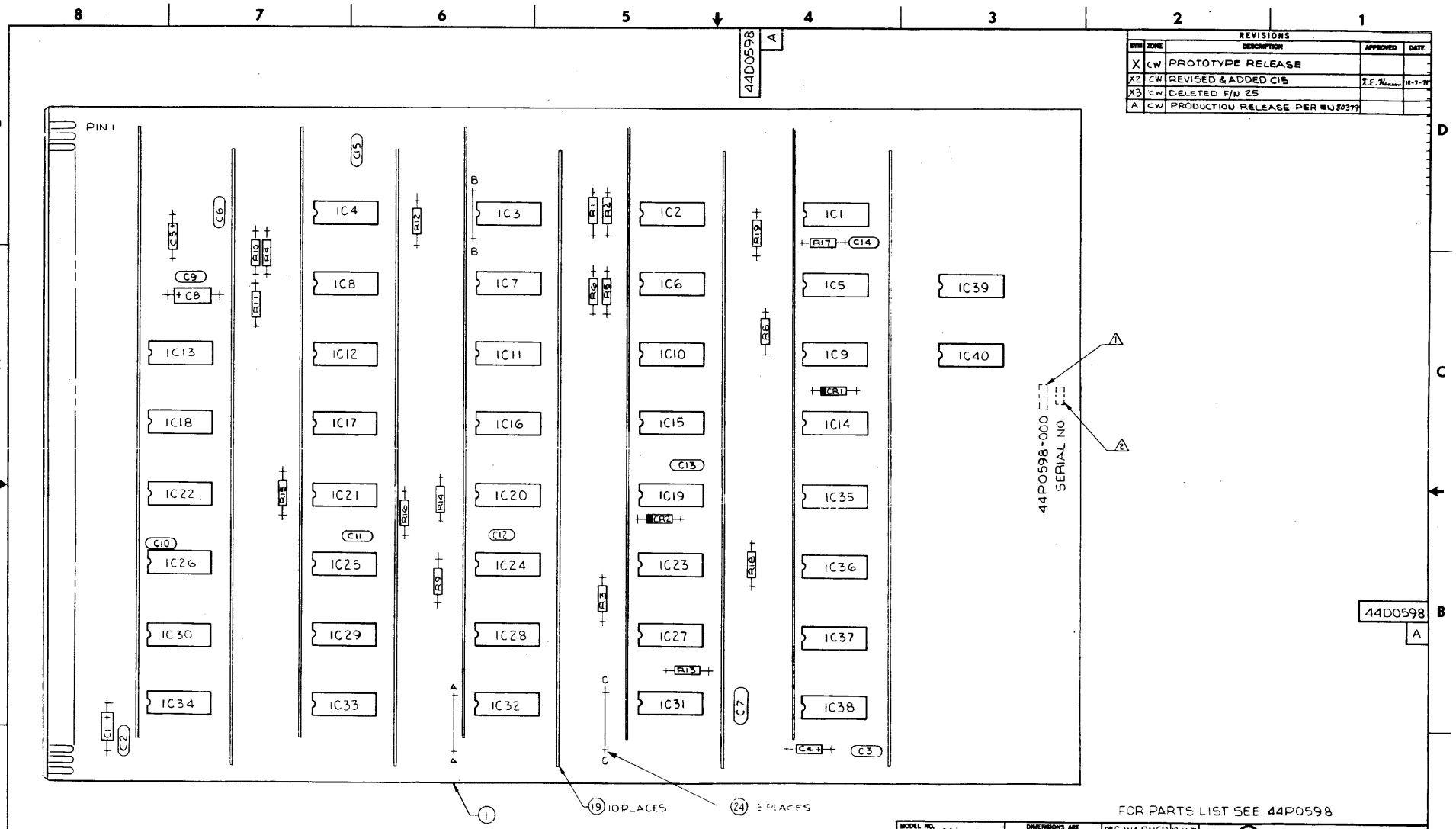

REVISIONS				
SYM	ZONE	DESCRIPTION	APPROVED	DATE
X	CW	PROTOTYPE RELEASE		
X2	CW	REVISED & ADDED C15	T.E. Hansen	10-7-71
X3	CW	DELETED F/N 25		
A	CW	PRODUCTION RELEASE PER ECN 80379		

FOR PARTS LIST SEE 44P0598

⚠2 MARK SERIAL NO. WHERE SHOWN USING .12 HIGH PERMANENT CHARACTERS.

⚠1 MARK REVISION LETTER OF PARTS LIST TO WHICH PART WAS MANUFACTURED. APPROX. WHERE SHOWN IDENTIFICATION TO BE .12 HIGH CHARACTERS AND PERMANENT

NOTE: UNLESS OTHERWISE SPECIFIED

REFERENCE DRAWINGS

LOGIC DIAGRAM	91D0362
PHOTOMASTER	97D0712
P.W. BOARD	40D0511
SOLDER MASK	97D0714
SILKSCREEN	97D0713

MODEL NO.	620/L-1CC	DR C. WARNER	10-14-71
NEXT ASSY	51A1277	CHK	
MATERIAL		DSGN	
FINISH		ENGR E. Hansen	10-19-71
		APPD	11-4-71
		APPD	

DIMENSIONS ARE IN INCHES AND AFTER FINISHING
TOLERANCES (UNLESS OTHERWISE SPECIFIED)
X ± 1
.XX ± .03
.XXX ± .010
ANGLES ± 0.5°
BREAK ALL SHARP EDGES .010 R APPROX
DO NOT SCALE DRAWING

THIS DOCUMENT MAY CONTAIN PROPRIETARY INFORMATION AND SUCH INFORMATION MAY NOT BE DISCLOSED TO OTHERS FOR ANY PURPOSE OR USED TO PRODUCE THE ARTICLE OR SUBJECT, WITHOUT WRITTEN PERMISSION FROM VDM

varian data machines a varian subsidiary
2722 michelson drive irvine california 92664

TITLE
INTERRUPT TRAP ASSEMBLY, DM342

CODE IDENT NO.	SIZE	DWG NO	REV
21101	D	44D0598	A

SCALE 2/1 SHEET 1 OF 1

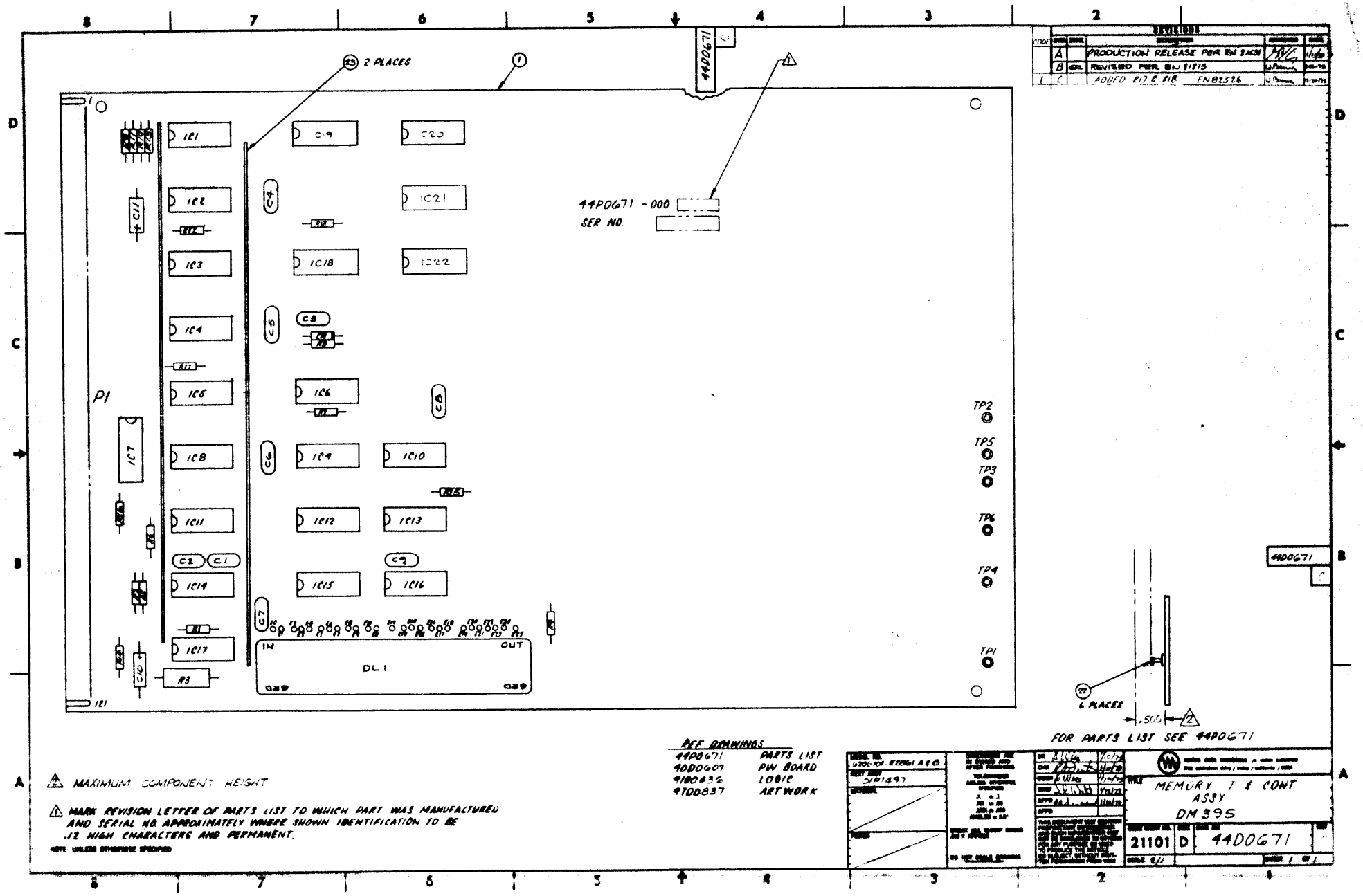

REVISIONS
A PRODUCTION RELEASE PER EN 81631
B REVISED PER EN 81315
C ADDED R17 & R18 EN82526
2 PLACES
44D0671
44D0671 -000
SER NO.
P1
IC1
IC2
IC3
IC4
IC5
IC6
IC7
IC8
IC9
IC10
IC11
IC12
IC13
IC14
IC15
IC16
IC17
IC18
IC21
IC22
C1
C2
C3
C4
C5
C6
C7
C8
C9
C10
C11
R3
R17
R18
TP1
TP2
TP3
TP4
TP5
TP6
IN
OUT
DL1
6 PLACES
.500
FOR PARTS LIST SEE 44D0671
REF DRAWINGS
44D0671 PARTS LIST
40D0607 PW BOARD
41D0436 LOGIC
41D0837 ARTWORK
MAXIMUM COMPONENT HEIGHT
MARK REVISION LETTER OF PARTS LIST TO WHICH PART WAS MANUFACTURED AND SERIAL NO APPROXIMATELY WHERE SHOWN. IDENTIFICATION TO BE .12 HIGH CHARACTERS AND PERMANENT.
NOTE: UNLESS OTHERWISE SPECIFIED
MEMORY T & CONT ASSY
DM 395
21101
D
44D0671
SCALE 2/1
SHEET 1 OF 1

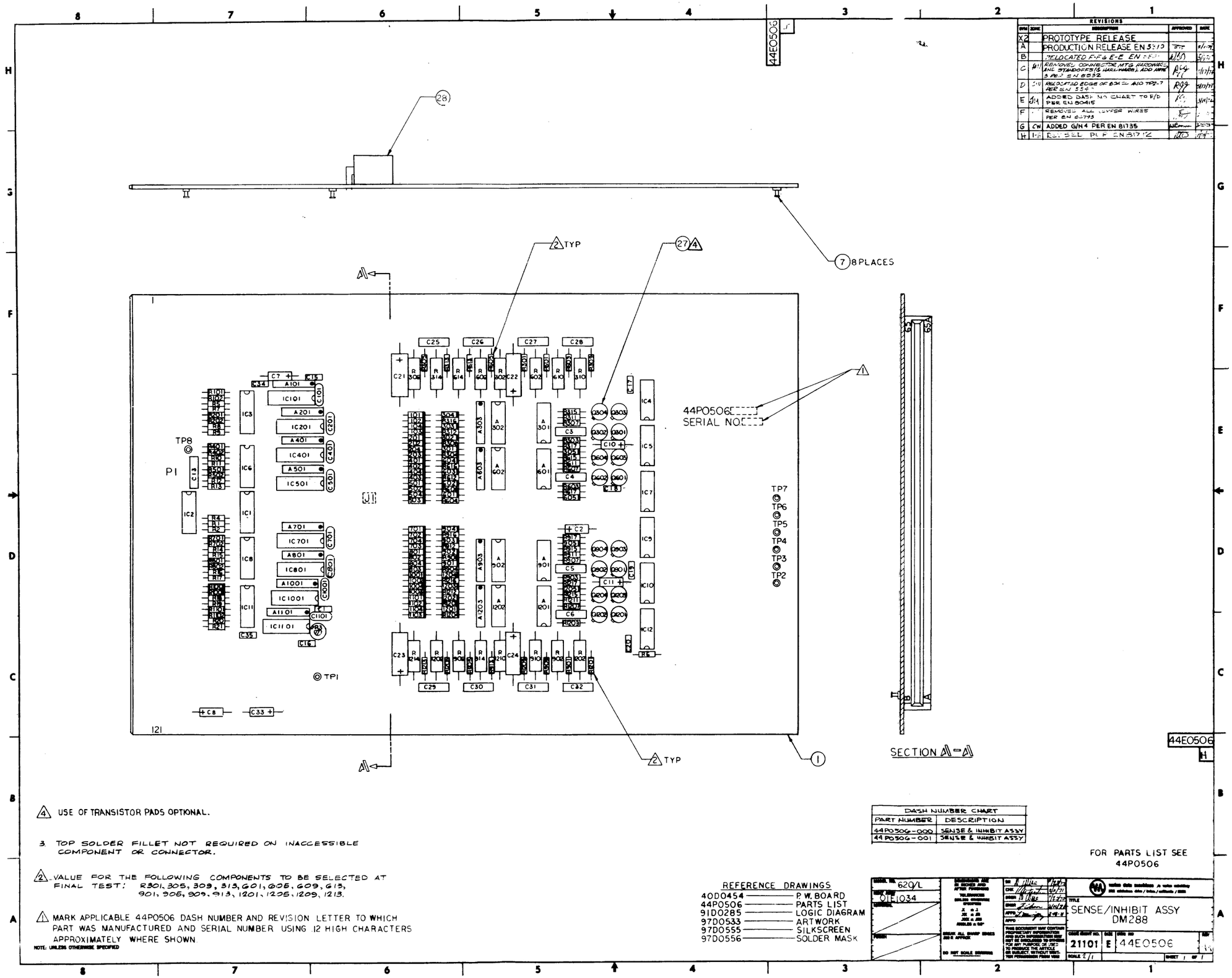

REVISIONS				
SYM	ZONE	DESCRIPTION	APPROVED	DATE
X2		PROTOTYPE RELEASE		
A		PRODUCTION RELEASE EN 5310	[illegible]	[illegible]
B		RELOCATED F-F & E-E EN [illegible]	[illegible]	[illegible]
C	[illegible]	REMOVED CONNECTOR MTG HARDWARE AND STANDOFFS (6 HARDWARE), ADD NOTE 3 PER EN 5532	[illegible]	[illegible]
D	[illegible]	RELOCATED EDGE OF BOARD AND TP2-7 PER EN 5547	[illegible]	[illegible]
E	[illegible]	ADDED DASH NO CHART TO F/D PER EN 80415	[illegible]	[illegible]
F		REMOVED ALL JUMPER WIRES PER EN 80793	[illegible]	[illegible]
G	CW	ADDED G/N 4 PER EN 81735	[illegible]	[illegible]
H	[illegible]	REVISED PER EN 81712	[illegible]	[illegible]

4 USE OF TRANSISTOR PADS OPTIONAL.

3. TOP SOLDER FILLET NOT REQUIRED ON INACCESSIBLE COMPONENT OR CONNECTOR.

2 VALUE FOR THE FOLLOWING COMPONENTS TO BE SELECTED AT FINAL TEST: R301, 305, 309, 313, 601, 605, 609, 613, 901, 905, 909, 913, 1201, 1205, 1209, 1213.

1 MARK APPLICABLE 44P0506 DASH NUMBER AND REVISION LETTER TO WHICH PART WAS MANUFACTURED AND SERIAL NUMBER USING .12 HIGH CHARACTERS APPROXIMATELY WHERE SHOWN.

NOTE: UNLESS OTHERWISE SPECIFIED

DASH NUMBER CHART	
PART NUMBER	DESCRIPTION
44P0506-000	SENSE & INHIBIT ASSY
44P0506-001	SENSE & INHIBIT ASSY

FOR PARTS LIST SEE 44P0506

REFERENCE DRAWINGS

40D0454	P.W. BOARD
44P0506	PARTS LIST
91D0285	LOGIC DIAGRAM
97D0533	ARTWORK
97D0555	SILKSCREEN
97D0556	SOLDER MASK

MODEL NO. 620/L
NEXT ASSY 01E1034
MATERIAL
FINISH

DIMENSIONS ARE IN INCHES AND AFTER FINISHING
TOLERANCES UNLESS OTHERWISE SPECIFIED
.X ± .1
.XX ± .03
.XXX ± .005
ANGLES ± 0°
BREAK ALL SHARP EDGES .010 R APPROX
DO NOT SCALE DRAWING

DR [illegible] 7/28/70
CHK [illegible] 8/11/71
DSGN [illegible] 7/28/70
ENGR [illegible] 8/11/71
APPD [illegible] 8-18-71
APPD

THIS DOCUMENT MAY CONTAIN PROPRIETARY INFORMATION AND SUCH INFORMATION MAY NOT BE DISCLOSED TO OTHERS FOR ANY PURPOSE OR USED TO PRODUCE THE ARTICLE OR SUBJECT, WITHOUT WRITTEN PERMISSION FROM VIEW

TITLE SENSE/INHIBIT ASSY DM288

CODE IDENT NO. 21101 | SIZE E | DWG NO 44E0506 | REV H

SCALE 2/1 | SHEET 1 OF 1

DWG NO. 44P0671

REVISIONS

REV	EN	CHG CODE	DESCRIPTION	DR	APPD
F	82526	1	UPDATED REV LTR OF REF DWG'S. WAS: B, UPDATED REV LTR OF FIND Nº 1, WAS: C, REVISED QTY OF FIN 16, WAS: 12, REVISED PART Nº FOR FIND Nº 26, WAS: 49A0508-000	WPQ	W.E.B. 12-21-73

NEXT ASSEMBLY 81A7497	MODEL NO. 620/L-101-E2861 A&B	varian data machines / a varian subsidiary 2722 michelson drive / irvine / california / 92664
DR D.WISE 1/10/73	CODE IDENT NO. 21101	TITLE PARTS LIST - MEMORY T&CONT ASSY, DM395
CHK R.A.D.		
DSGN	THIS DOCUMENT MAY CONTAIN PROPRIETARY INFORMATION AND SUCH INFORMATION MAY NOT BE DISCLOSED TO OTHERS FOR ANY PURPOSE OR USED TO PRODUCE THE ARTICLE OR SUBJECT, WITHOUT PERMISION FROM VDM.	SIZE A DWG NO. 44P0671 REV F
ENGR		
APPD		
APPD		SHEET 1 OF 3

DWG. NO. 44P0671

QUANTITY REQ'D PER DASH NO						000	FIND NO	PART NUMBER	DESCRIPTION	REMARKS	ZONE
						REF	—	44D0671 C	ASSEMBLY		
						REF	—	91D0456 C	LOGIC DIAGRAM		
						REF	—	97D0837	ARTWORK		
						REF	—	98A0935	BOOTSTRAP LOADER PROTECT (E-2847)	ENGRG DESCRIPTION	
						1	1	40D0607-000 D	P.W. BOARD		
						2	2	49A0039-000	INTEGRATED CIRCUIT	IC6, 11	
						4	3	49A0023-000		IC7, 13, 18, 19	
						1	4	49A0041-000		IC16	
						2	5	49A0554-001		IC10, 22	
						1	6	49A0003-000		IC9	
						1	7	49A0056-000		IC12	
						1	8	49A0146-001		IC14	
						2	9	49A0079-000		IC8, 15	
						1	10	49A0019-000	INTEGRATED CIRCUIT	IC17	
						2	11	69N1500-101	CAP., 100pf 500V	C1, 2	
						7	12	71A0004-100	CAP., .1uf 50V	C3-9	
						2	13	71N0100-475	CAP., 4.7uf 10V 10%	C10, 11	
						1	14	77S1017-000	DIODE	CR1	
						1	5	80A0039-001	DELAY LINE	DL1	

NEXT ASSY 01A1497 | MODEL NO 620L-101-E2861 A&B | APPD [illegible] 1-12-73

REV	A	B	C	D	E
EN NO	81531	81815	81893	82011	82015
DATE	1/10/73	3-19-73	5/28/73	7/6/73	7/6/73
DR	[illegible]	GRL	[illegible]	[illegible]	[illegible]
CHK	[illegible]	[illegible]	[illegible]	[illegible]	[illegible]

TITLE: PARTS LIST
MEMORY T & CONT
ASSY DM 395

DWG NO 44P0671 | REV F

SHEET 2 OF 3

20A0017-0008

DWG. NO. 44P0671

PARTS LIST

CODE IDENT: 21101

QUANTITY REQ'D PER DASH NO 000	FIND NO	PART NUMBER	DESCRIPTION	REMARKS	ZONE
14	16	65N2500-102	RES, 1K, 1/4W, ±5%	R1, 2, 5, 7, 9-16, 17 & 18	
1	17	65N2500-181	RES, 180Ω, 1/4W, ±5%	R4	
1	18	65N2500-202	RES, 2K, 1/4W, ±5%	R6	
	19				
1	20	65N2500-103	RES, 10K, 1/4W, ±5%	R8	
1	21	65N1010-680	RES, 68Ω, 1W, ±5%	R3	
6	22	58A0066-002	TERMINAL	TP1 THRU TP6	
2	23	53C0194-000	BUS, POWER		
1	24	49A0060-000	INTEG CIRCUIT	IC20	
1	25	49A0007-000		IC2	
1	26	49A0042-000		IC4	
2	27	49A0510-000		IC1, 5	
1	28	49A0516-000	INTEG CIRCUIT	IC3	
1	29	49A0128-001	INTEG CIRCUIT	IC21	

NOTES:

DWG NO 44P0671

REV F

SHEET 2 OF 2

94A0017-001B

REVISIONS				
DASH	ZONE	DESCRIPTION	APPROVED	DATE
X		PROTOTYPE RELEASE		
A		PRODUCTION RELEASE EN 5644		
-		CORRECT HEAT SINK COMPONENT INFORMATION EN 5960		
B		J/N & MARK PART NO WAS 83E0035-XXX, FIN 5 WAS 83E0035-000, 83E0035-001 CORRECTED CABLE OUTLET PICTORIAL VIEW TO AGREE WITH BASE CHANGE EN 8014		
-		ADDED GIN 7 EN 8018		
C		F/O FIN 28 WAS 25 PLACES, FIN 26 & 40 2 PLACES WAS FIN 26 2 PLACES EN 5748		
D	SM	MODEL NUMBER 83E0035-000 WAS NO 2 USED ON ALL S/N 34 & UP TO S/N 44 ALL S/N 45 & UP WERE GIN 5 PER EN 8042B		
E	SM	REMOVED CAPACITIVE COUPLING FROM T1 PER EN 8043		
-	SM	ALL S/N 339 AND ABOVE		
F	GR	REVISED PER EN 81575		
G	SM	REVISED PER EN 81908		

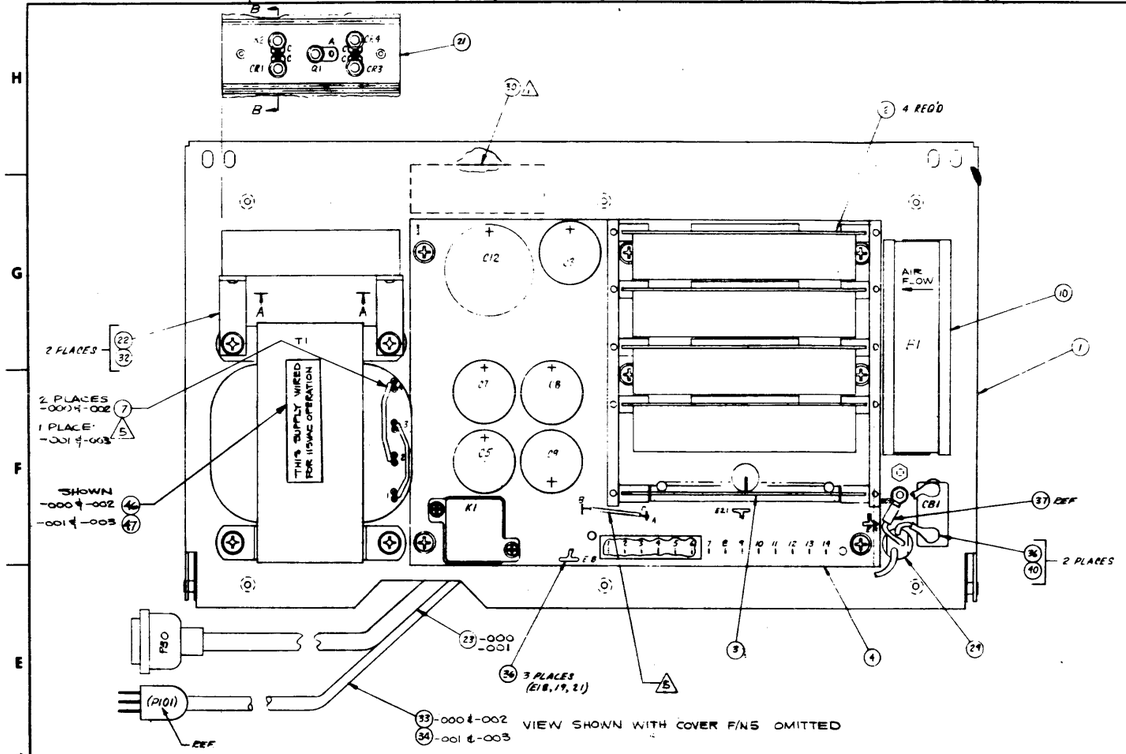

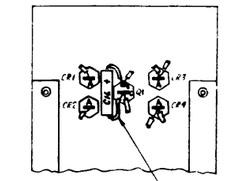

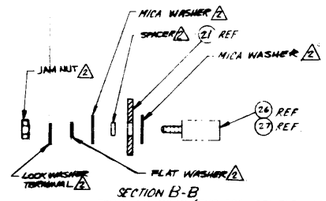

CAUTION: EN 82083 AFFECTS THIS DWG.

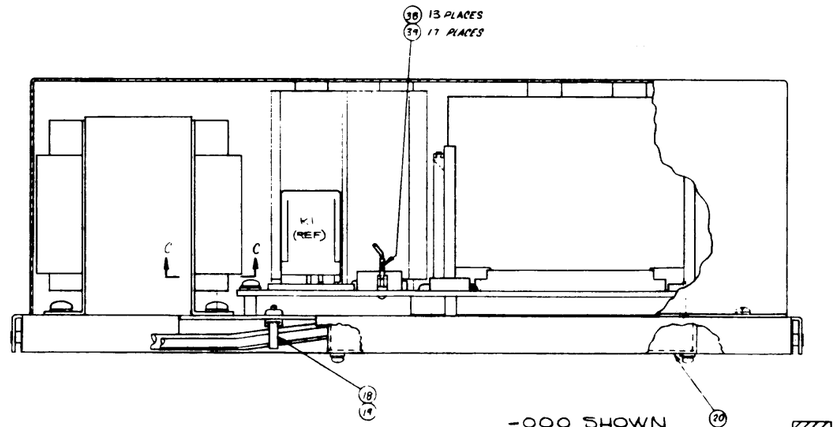

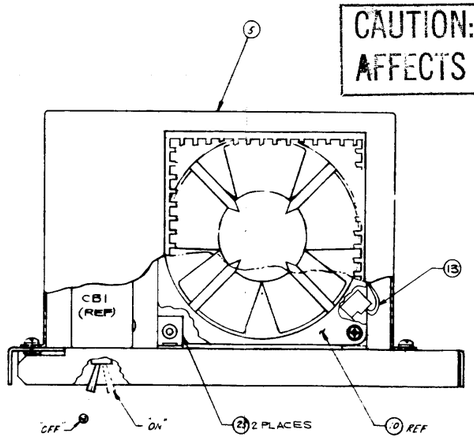

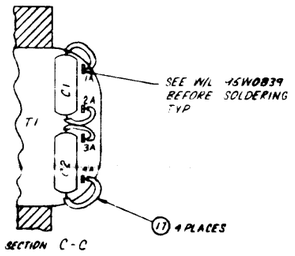

83E0035 G

DASH NUMBER CHART	
PART NUMBER	DESCRIPTION
83P0035-000	POWER SUPPLY ASSY 115VAC 3
83P0035-001	POWER SUPPLY ASSY 230VAC 3
83P0035-002	POWER SUPPLY ASSY 115VAC W/O OUTPUT CABLE 4
83P0035-003	CABLE & SUPPLY ASSY 230VAC W/O OUTPUT CABLE 4 5

FOR PARTS LIST, SEE 83P0035

8 ~~FOR 230V -001 & -003 CUT OFF 115V PLUG (P101) AND ATTACH 230V PLUG P/N 34~~

7 TORQUE STUDS OF CR1 THRU CR4 & Q1 TO 15 IN-LBS MAX.

4 ~~BOND P/N 31 TO P/N 1 WHERE P/N 31 IS SHOWN.~~

5 FOR 115 VAC P/S PART NO 83P0035-XXX & -002 JUMPER T-1 TO T1-3, T1-2 TO T1-4 AS SHOWN. FOR 230 VAC P/S PART NO 83P0035-001 & 003 JUMPER T1-1 TO T1-3, REMOVE JUMPER FROM TERMINATION POINT "B" ON P/N 4 AND CONN

1 USE HARDWARE IN ACCORDANCE WITH 98A0536.

3 WIRE PER W/L 95W0839.

2 SUPPLIED WITH P/N 26.

1 MARK PART NUMBER 83P0035-XXX (USE APPROPRIATE DASH NO) AND THE REVISION LETTER OF THE PARTS LIST TO WHICH THE PART WAS MFD, INPUT VOLTAGE AND SER NO. ON ID TAG P/N 30. ATTACH P/N 30 TO BASE APPROX WHERE SHOWN

NOTE: UNLESS OTHERWISE SPECIFIED

MODEL NO.	GEO/L-95-5	ENGINEER	ENGINEER
PART NUMBER	01D1034	DRAWN	DRAWN
MATERIAL		TRACED	ENGINEER
FINISH		CHECKED	
		APPD	
		APPD	

DO NOT SCALE DRAWING

TITLE	POWER SUPPLY ASSY
SIZE	21101
DASH NO.	E
DRAWING NO.	83E0035
REV	G
SCALE 1:1	SHEET 1 OF 1

NOTES: (UNLESS OTHERWISE SPECIFIED)

1. ALL RESISTORS ARE 1/4W, ± 5%
2. THIS DRAWING CONSISTS OF SHEETS 1.0, 2.0, 3.0, 4.0, 5.0, 6.0, 7.0, 8.0, 9.0, 10.0
3. ON IC'S 1, 3, 4, 6, 7, 8 & 10 PIN 14 IS CONNECTED TO +5 AND PIN 7 IS CONNECTED TO GRD.
4. PREFIX COMPONENT REFERENCE DESIGNATION NO. WITH CIRCUIT NO. EXAMPLE: CKT 1, R101; CKT 2, R202

REFERENCE DESIGNATIONS	
LAST USED	NOT USED
C24	C18, 19
CR15, CR_24	
L2	
Q26	
R51, R_09	
RT 2	
IC 11	
A_04	

REFERENCE DRAWINGS	
44D0578	ASSEMBLY
44P0578	PARTS LIST
40D0497	BOARD DETAIL
97D0673	ARTWORK
97D0672	SILKSCREEN
97D0671	SOLDERMASK

DR	[illegible]	8/17/71
CHK	[illegible]	10/18/71
DSGN	[illegible]	9/3/71
ENGR	[illegible]	[illegible]
APPD	[illegible]	[illegible]
APPD		

THIS DOCUMENT MAY CONTAIN PROPRIETARY INFORMATION AND SHALL NOT BE REPRODUCED OR SHALL NOT BE DISCLOSED TO OTHERS FOR ANY PURPOSE OR USED TO PRODUCE THE ARTICLE OR SUBJECT, WITHOUT WRITTEN PERMISSION FROM VDM

varian data machines /a varian subsidiary
2702 michelson drive / irvine / california / 92664

TITLE
LOGIC DIAGRAM
DR/SK SW

CODE IDENT NO.	SIZE	DWG NO	REV
21101	C	91C0346	C

SCALE — 620/5-100 SHEET 1.0

REVISIONS				
DASH	ZONE	DESCRIPTION	APPROVED	DATE
X	03	PROTOTYPE RELEASE		
X_2	03	ADDED DIODES IN CKTS 1-4		
A	03	PRODUCTION RELEASED EN 80250		10/20/72
B		C23 & 24 WAS .33 UF 50VDC EN 80374		4/28/73
C	04	ADDED CRIS PER EN 81903		5/24/73

TABLE OF CONTENTS

DESCRIPTION	SHEET NO.
COVER	1.0
REVISION, TABLE OF CONTENTS & CONNECTOR PIN ASSIGNMENTS	2.0
DECOUPLING CAPS. & DRIVER SW'S, POSITIVE	3.0
DRIVER SWITCHES, NEGATIVE	4.0
SINK SWITCHES, NEGATIVE	5.0
SINK SWITCHES, POSITIVE	6.0
DRIVER LOGIC	7.0
SINK LOGIC	8.0
PREDRIVER	9.0
CURRENT SOURCES	10.0

CONNECTOR P1

PINS	FUNCTION	SHEET
1	GRD	
2		
3	GRD	
4	-12V	
5	GRD	
6	TCRX-	9.0
7	YS6B	8.0
8	YS6A	8.0
9	YS7B	8.0
10	YS7A	8.0
11	YS4B	8.0
12	YS4A	8.0
13	YS5B	8.0
14	YS5A	8.0
15	YS2B	8.0
16	YS2A	8.0
17	YS3B	8.0
18	YS3A	8.0
19	YS0B	8.0
20	YS0A	8.0
21	YS1B	8.0
22	YS1A	8.0
23	CA6A	7.0
24	CA1B	7.0
25	CA7A	7.0
26	CA0B	7.0
27	CA4A	7.0
28	CA3B	7.0
29	CA5A	7.0
30	CA2B	7.0
31	CA2A	7.0
32	CA7B	7.0
33	CA3A	7.0
34	CA6B	7.0
35	CA0A	7.0
36	CA5B	7.0
37	CA1A	7.0
38	CA4B	7.0
39	SPARE	7.0
40	SPARE	7.0
41	GRD	
42	GRD	
43	L11X+	8.0
44	L10X+	8.0
45	GRD	
46	LC9X+	8.0
47	GRD	
48	RSTX-	9.0
49	GRD	
50	WSTX-	9.0
51	GRD	
52	SSLX-	9.0
53	GRD	
54	LC2X+	9.0
55	GRD	
56	LC5X+	7.0
57	GRD	
58	SDIS	7.0
59	GRD	
60	RXXX-	7.0
61	NOT AVAILABLE	
62	NOT AVAILABLE	
63	GRD	
64	LC4X+	7.0
65	GRD	
66	LC1X+	7.0
67	GRD	
68	LC0X+	7.0
69	GRD	
70	LC3X+	7.0
71	GRD	
72	RWT2-	9.0
73	GRD	
74	L12X+	9.0
75	GRD	
76	RWT1-	9.0
77	GRD	
78	LC8X+	8.0
79	LC7X+	8.0
80	LC6X+	8.0
81	GRD	
82	GRD	
83	SPARE	7.0
84	CC1B	7.0
85	CC6A	7.0
86	CC0B	7.0
87	CC7A	7.0
88	CC3B	7.0
89	CC4A	7.0
90	CC2B	7.0
91	CC5A	7.0
92	CC5B	7.0
93	CC2A	7.0
94	CC4B	7.0
95	CC3A	7.0
96	CC7B	7.0
97	CC0A	7.0
98	CC6B	7.0
99	CC1A	7.0
100	XS6A	8.0
101	XS6B	8.0
102	XS7A	8.0
103	XS7B	8.0
104	XS4A	8.0
105	XS4B	8.0
106	XS5A	8.0
107	XS5B	8.0
108	XS2A	8.0
109	XS2B	8.0
110	XS3A	8.0
111	XS3B	8.0
112	XS0A	8.0
113	-12V	
114	XS1A	8.0
115	XS0B	8.0
116	+5V	
117	XS1B	8.0
118		
119	+12V	
120	+12V	
121	GRD	
122	GRD	

CONNECTOR FUNCTIONS

CODE IDENT NO.	SIZE	DWG NO	REV
21101	C	91C0346	C
SCALE —			SHEET 2.0

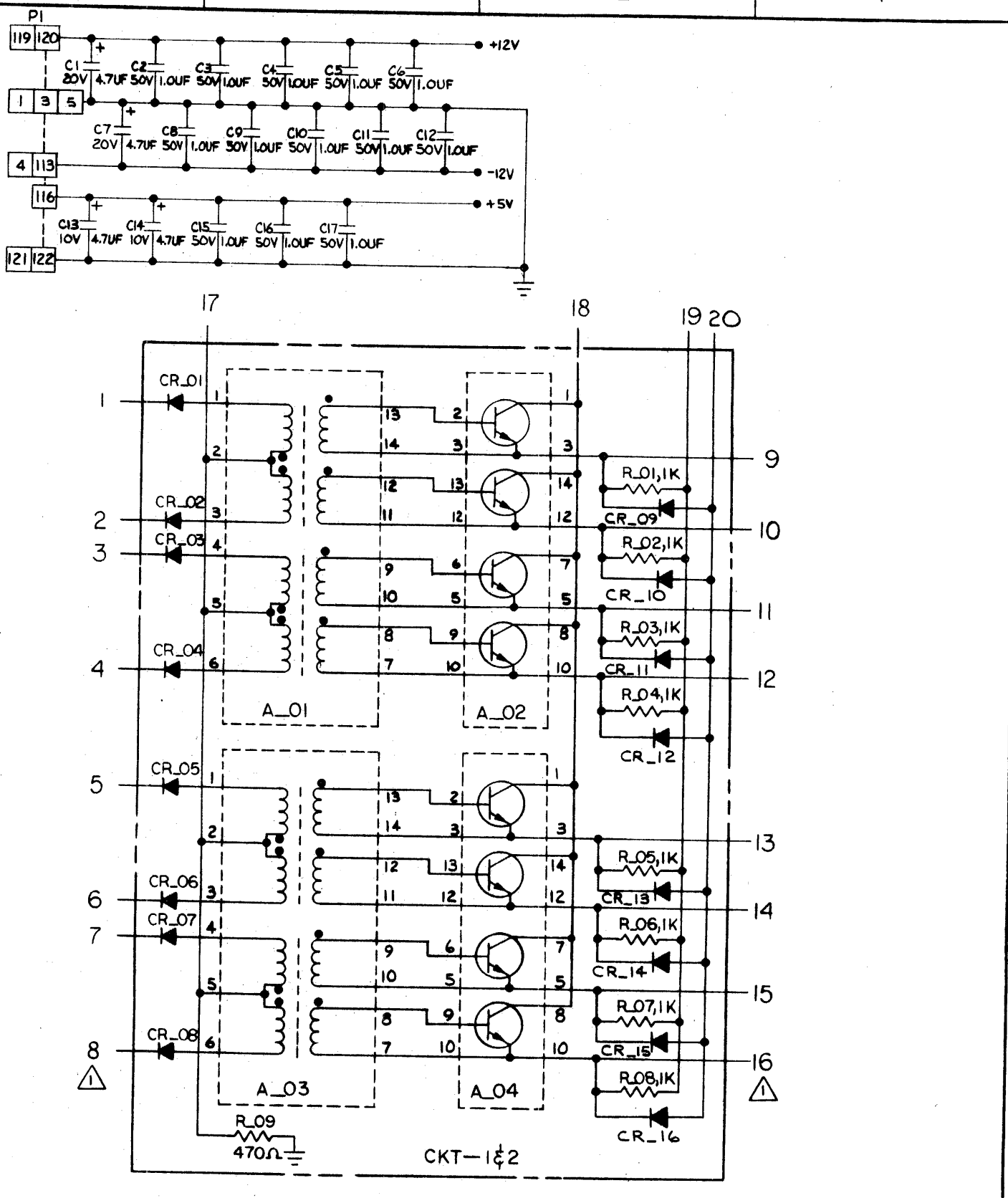

(1) NUMBERS OUTSIDE PHANTOM LINES CORRESPOND TO CIRCUIT BLOCKS 1 & 2 ON SHT 7

DECOUPLING CAPS. & DRIVER SW'S, POSITIVE

21101	C	91C0346	C
SCALE —			SHEET 3.0

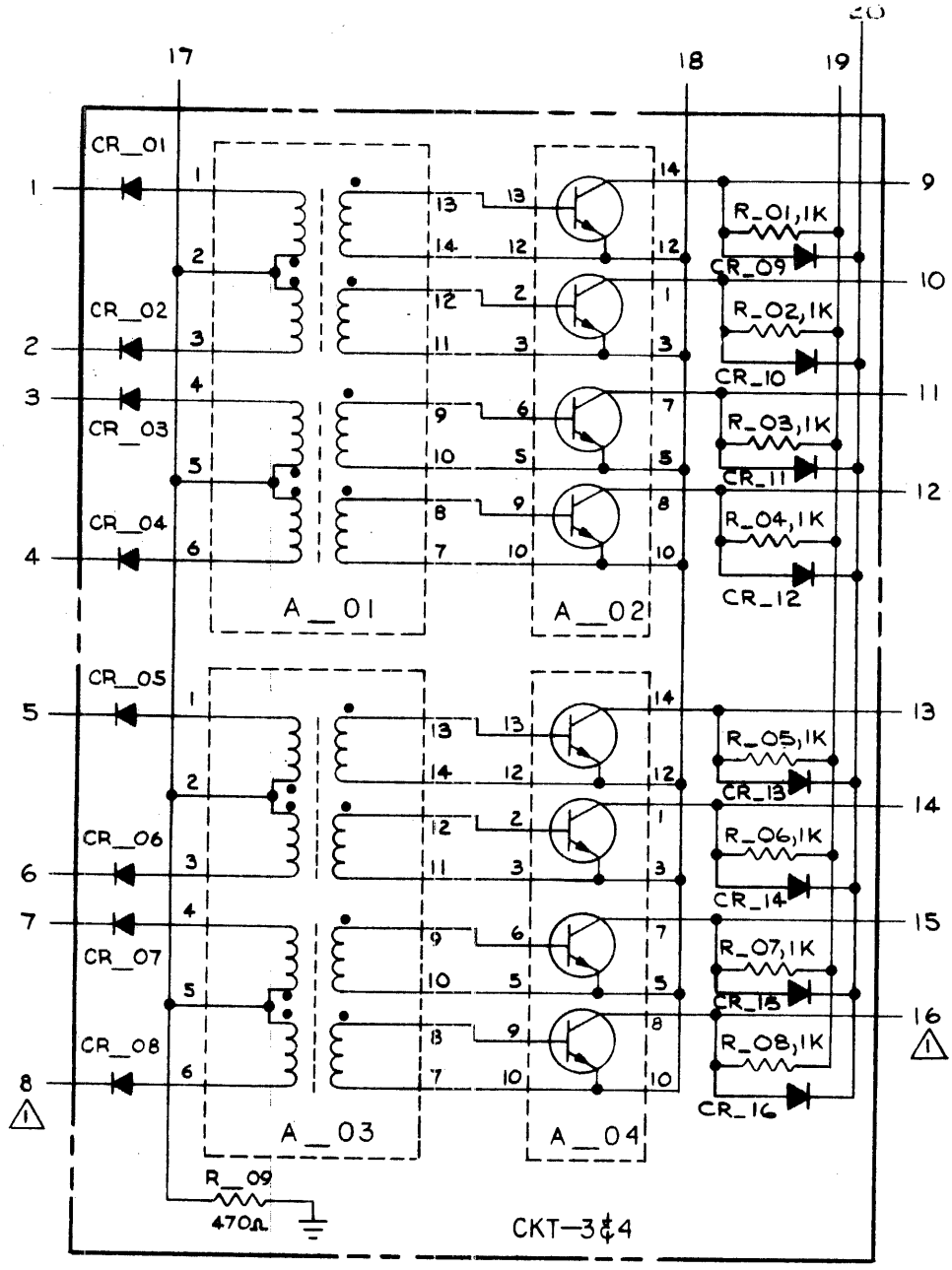

⚠1 NUMBERS OUTSIDE PHANTOM LINES CORRESPOND TO CIRCUIT BLOCKS 3&4 ON SHT 7

DRIVER SWITCHES, NEGATIVE

CODE IDENT NO.	SIZE	DWG NO.	REV
21101	C	9C0346	C
SCALE —			SHEET 4.0

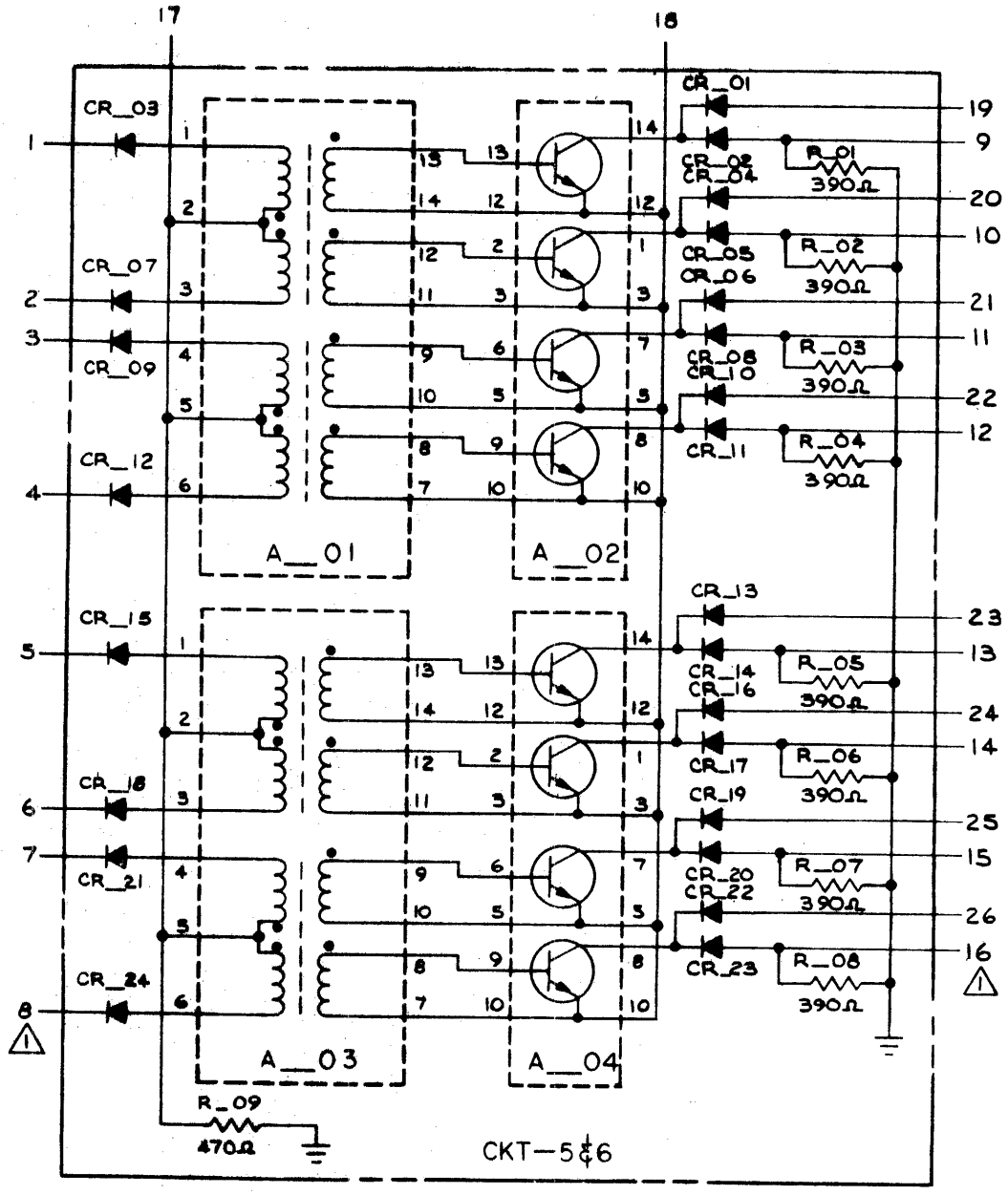

⚠ NUMBERS OUTSIDE PHANTOM LINES CORRESPOND TO CIRCUIT BLOCKS 5 & 6 ON SHT 8

SINK SWITCH, NEGATIVE

CODE IDENT NO.	SIZE	DWG NO	REV
21101	C	91C0346	C
SCALE —			SHEET 5.0

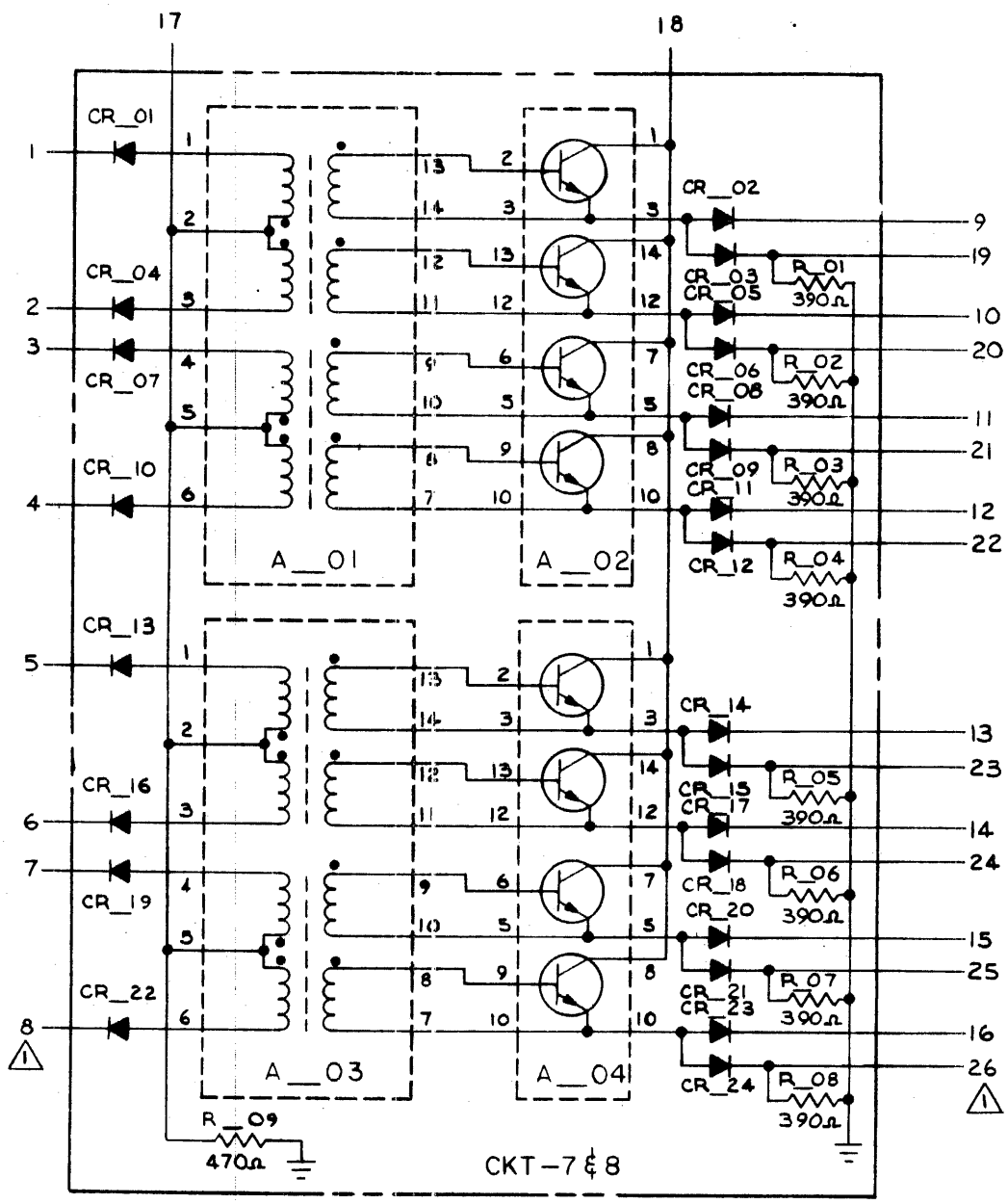

⚠1 NUMBERS OUTSIDE PHANTOM LINES CORRESPOND TO CIRCUIT BLOCKS 7 & 8 ON SHT 8

SINK SWITCH POSITIVE

21101	C	91C0346	C
SCALE —		SHEET 6.0	

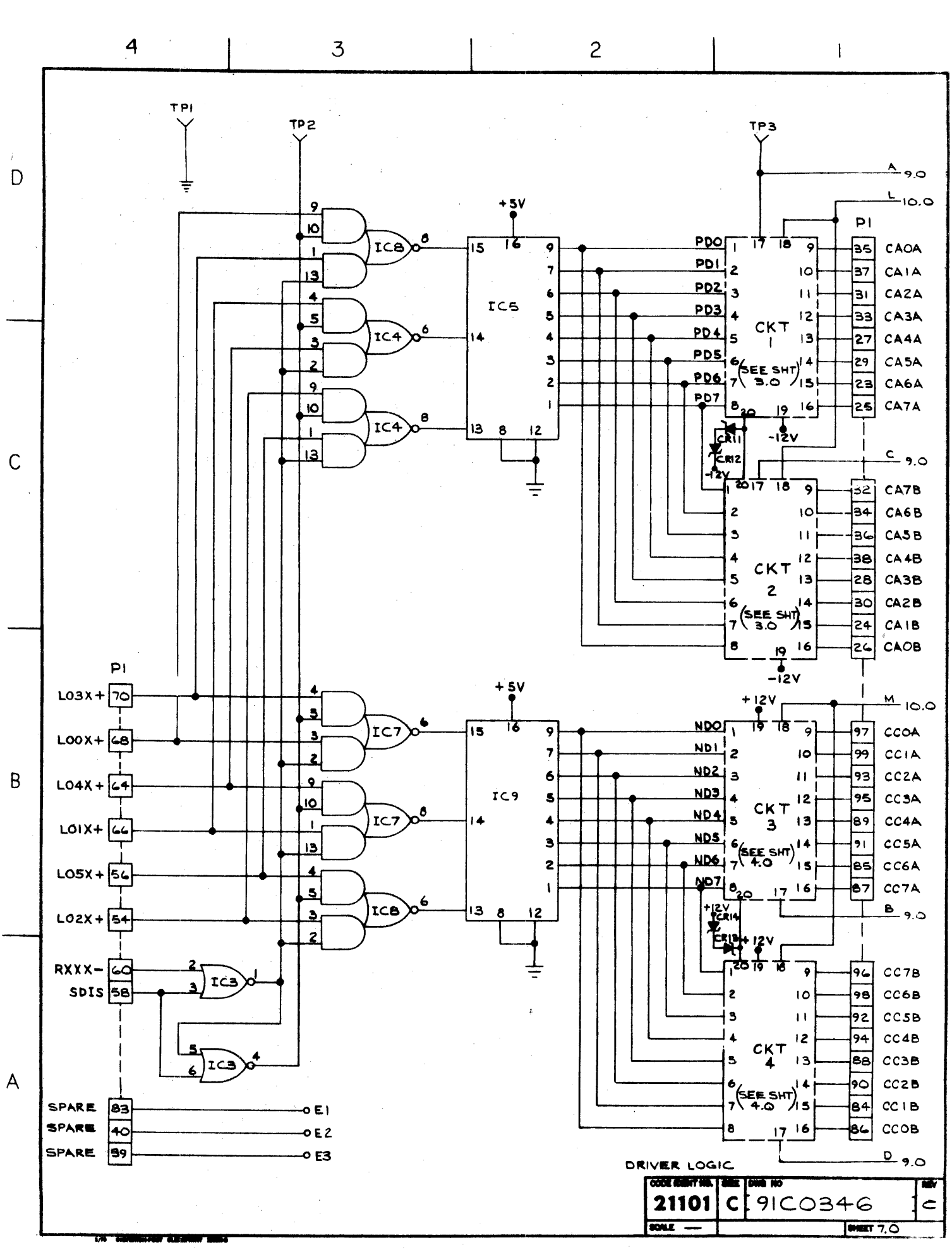
4
3
2
1
D
C
B
A
TP1
TP2
TP3
+5V
IC8
IC4
IC5
IC7
IC9
IC3
P1
PD0
PD1
PD2
PD3
PD4
PD5
PD6
PD7
CKT 1
CKT 2
CKT 3
CKT 4
(SEE SHT 3.0)
(SEE SHT 4.0)
-12V
+12V
CR11
CR12
CR13
CR14
A 9.0
B 9.0
C 9.0
D 9.0
L 10.0
M 10.0
CA0A
CA1A
CA2A
CA3A
CA4A
CA5A
CA6A
CA7A
CA7B
CA6B
CA5B
CA4B
CA3B
CA2B
CA1B
CA0B
CC0A
CC1A
CC2A
CC3A
CC4A
CC5A
CC6A
CC7A
CC7B
CC6B
CC5B
CC4B
CC3B
CC2B
CC1B
CC0B
L03X+
L00X+
L04X+
L01X+
L05X+
L02X+
RXXX-
SDIS
SPARE
SPARE
SPARE
E1
E2
E3
DRIVER LOGIC
21101
C
91C0346
SCALE —
SHEET 7.0

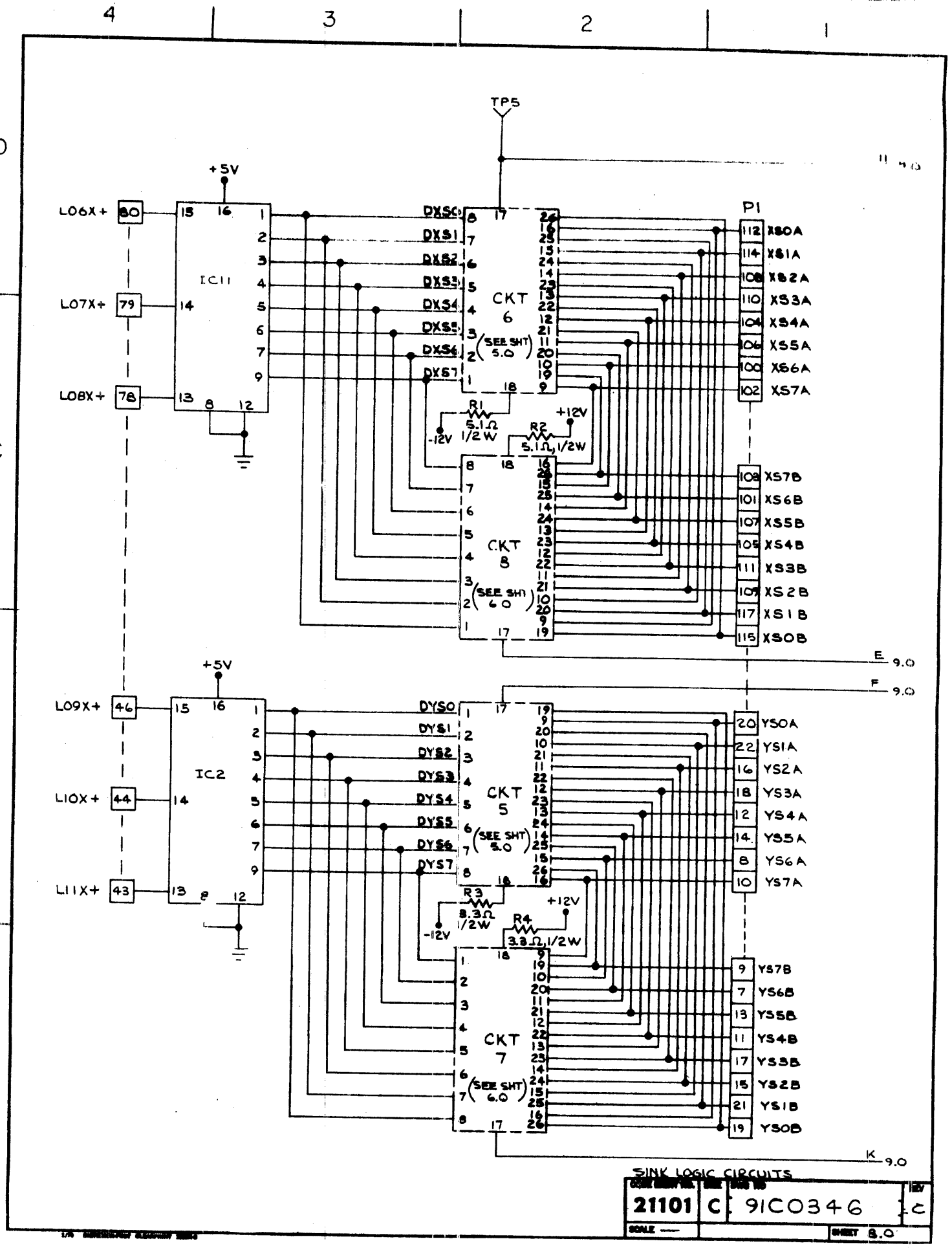
4
3
2
1
D
C
B
A
TP5
+5V
IC11
L06X+
L07X+
L08X+
80
79
78
DXS0
DXS1
DXS2
DXS3
DXS4
DXS5
DXS6
DXS7
CKT 6
(SEE SHT 5.0)
CKT 8
(SEE SHT 6.0)
R1
5.1Ω 1/2W
-12V
R2
5.1Ω, 1/2W
+12V
P1
XS0A
XS1A
XS2A
XS3A
XS4A
XS5A
XS6A
XS7A
XS7B
XS6B
XS5B
XS4B
XS3B
XS2B
XS1B
XS0B
E 9.0
F 9.0
IC2
L09X+
L10X+
L11X+
46
44
43
DYS0
DYS1
DYS2
DYS3
DYS4
DYS5
DYS6
DYS7
CKT 5
(SEE SHT 5.0)
CKT 7
(SEE SHT 6.0)
R3
8.3Ω 1/2W
R4
3.3Ω, 1/2W
YS0A
YS1A
YS2A
YS3A
YS4A
YS5A
YS6A
YS7A
YS7B
YS6B
YS5B
YS4B
YS3B
YS2B
YS1B
YS0B
K 9.0
SINK LOGIC CIRCUITS
21101
C
91C0346
SCALE —
SHEET 8.0

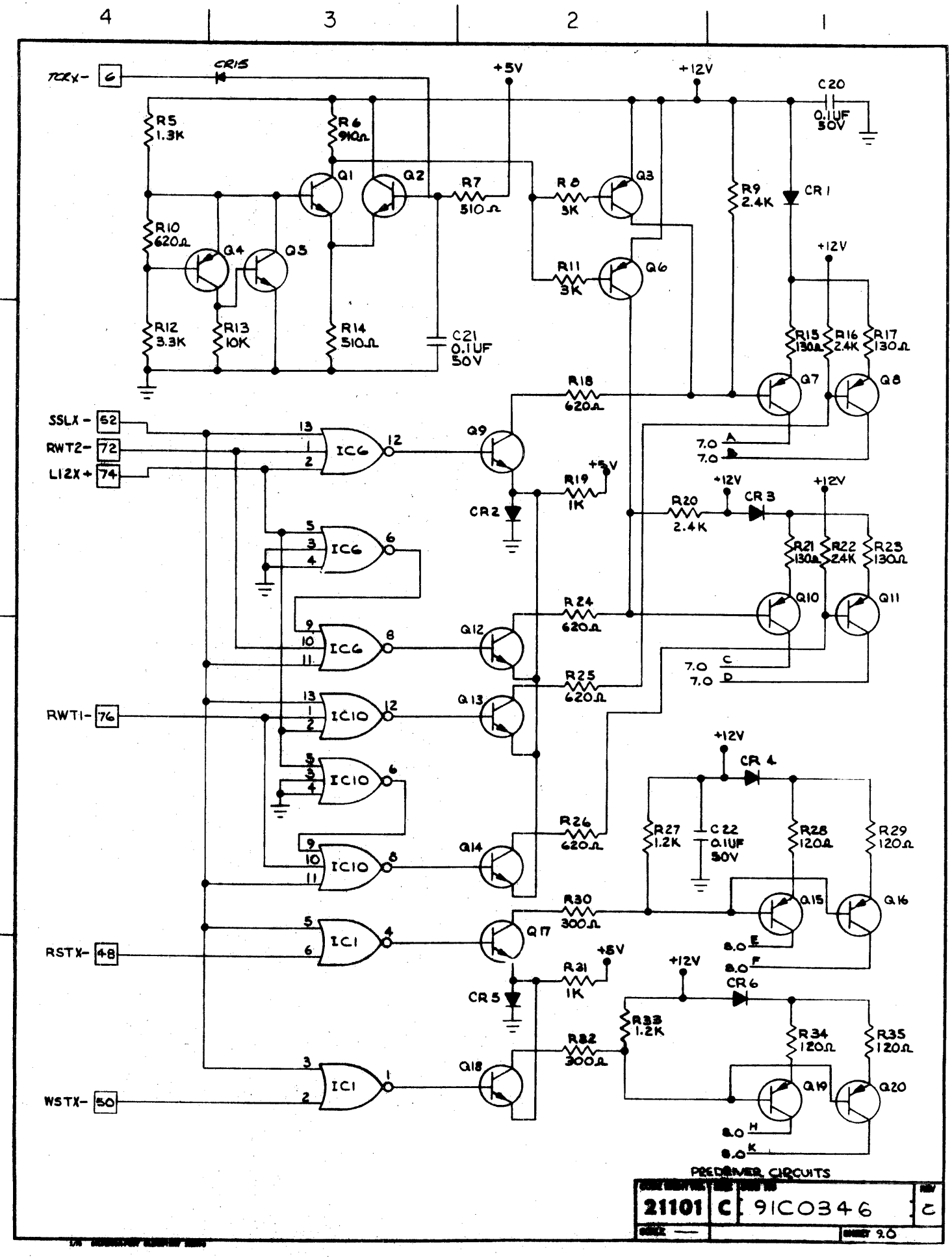
4
3
2
1
TCRX- 6
CR15
+5V
+12V
C20 0.1UF 50V
R5 1.3K
R6 910Ω
Q1
Q2
R7 510Ω
R8 3K
Q3
R9 2.4K
CR1
R10 620Ω
Q4
Q5
R11 3K
Q6
R12 3.3K
R13 10K
R14 510Ω
C21 0.1UF 50V
R15 130Ω
R16 2.4K
R17 130Ω
Q7
Q8
R18 620Ω
SSLX- 52
RWT2- 72
L12X+ 74
IC6
Q9
7.0 A
7.0 B
R19 1K
CR2
R20 2.4K
CR3
R21 130Ω
R22 2.4K
R23 130Ω
Q10
Q11
R24 620Ω
Q12
7.0 C
7.0 D
R25 620Ω
RWT1- 76
IC10
Q13
CR4
R26 620Ω
R27 1.2K
C22 0.1UF 50V
R28 120Ω
R29 120Ω
Q14
Q15
Q16
R30 300Ω
RSTX- 48
IC1
Q17
8.0 E
8.0 F
R31 1K
CR5
CR6
R33 1.2K
R34 120Ω
R35 120Ω
R32 300Ω
WSTX- 50
Q18
Q19
Q20
8.0 H
8.0 K
PREDRIVER CIRCUITS
21101
C
91C0346
C
SHEET 9.0

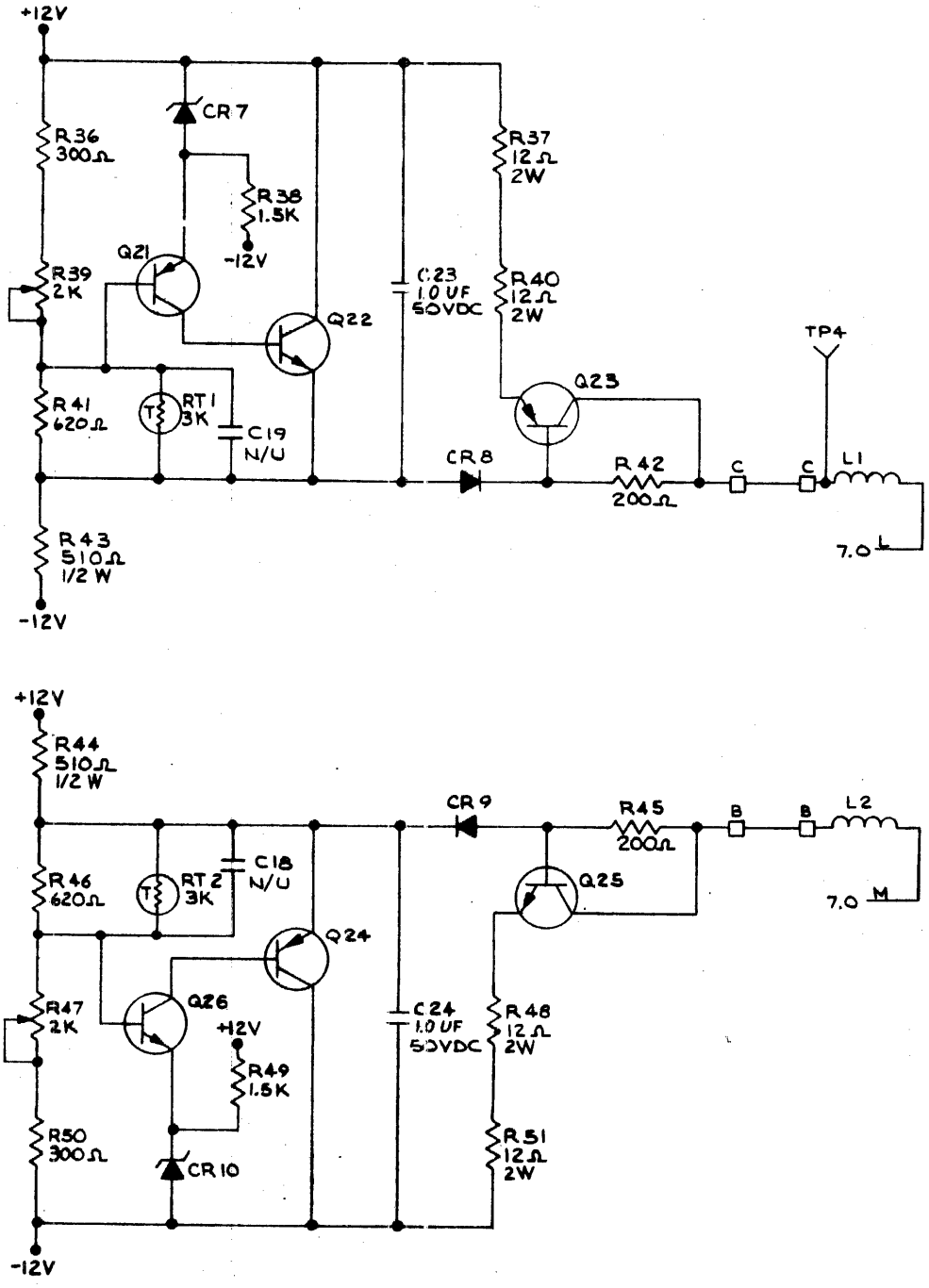

CURRENT SOURCES

CODE IDENT NO.	SIZE	DWG NO	REV
21101	C	91C0346	C
SCALE —			SHEET 10.0

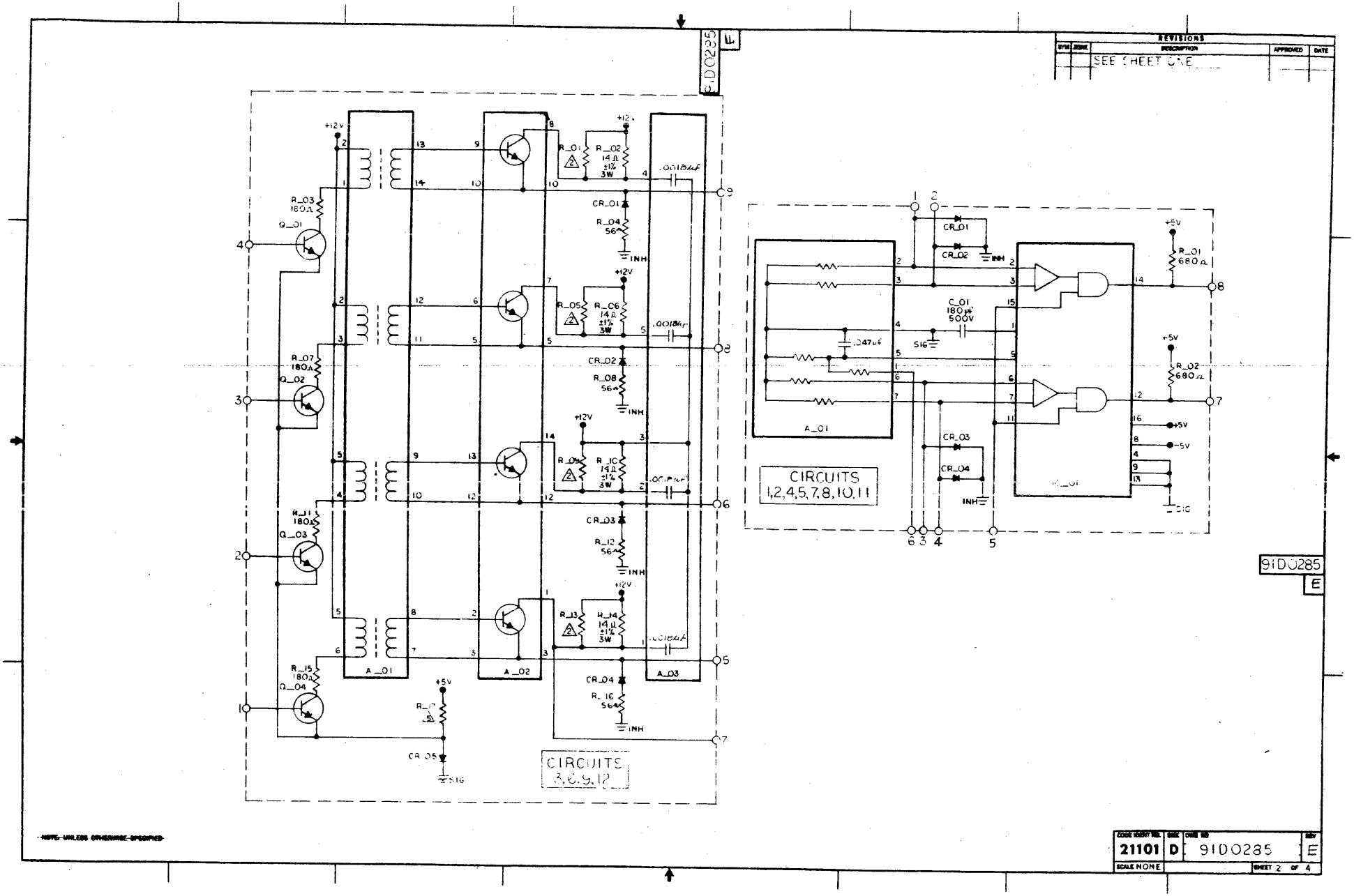

REVISIONS
SYM ZONE DESCRIPTION APPROVED DATE
SEE SHEET ONE
91D0285 E
CIRCUITS 3,6,9,12
CIRCUITS 1,2,4,5,7,8,10,11
A_01
A_02
A_03
Q_01
Q_02
Q_03
Q_04
R_03 180Ω
R_07 180Ω
R_11 180Ω
R_15 180Ω
R_01
R_02 14Ω ±1% 3W
R_05
R_06 14Ω ±1% 3W
R_09
R_10 14Ω ±1% 3W
R_13
R_14 14Ω ±1% 3W
R_17
CR_01
CR_02
CR_03
CR_04
CR_05
R_04 56Ω
R_08 56Ω
R_12 56Ω
R_16 56Ω
.0018μF
+12V
+5V
INH
S16
C_01 180μF 500V
.047μF
R_01 680Ω
R_02 680Ω
-5V
91D0285 E
NOTE: UNLESS OTHERWISE SPECIFIED
CODE IDENT NO. 21101
SIZE D
DWG NO 91D0285
REV E
SCALE NONE
SHEET 2 OF 4

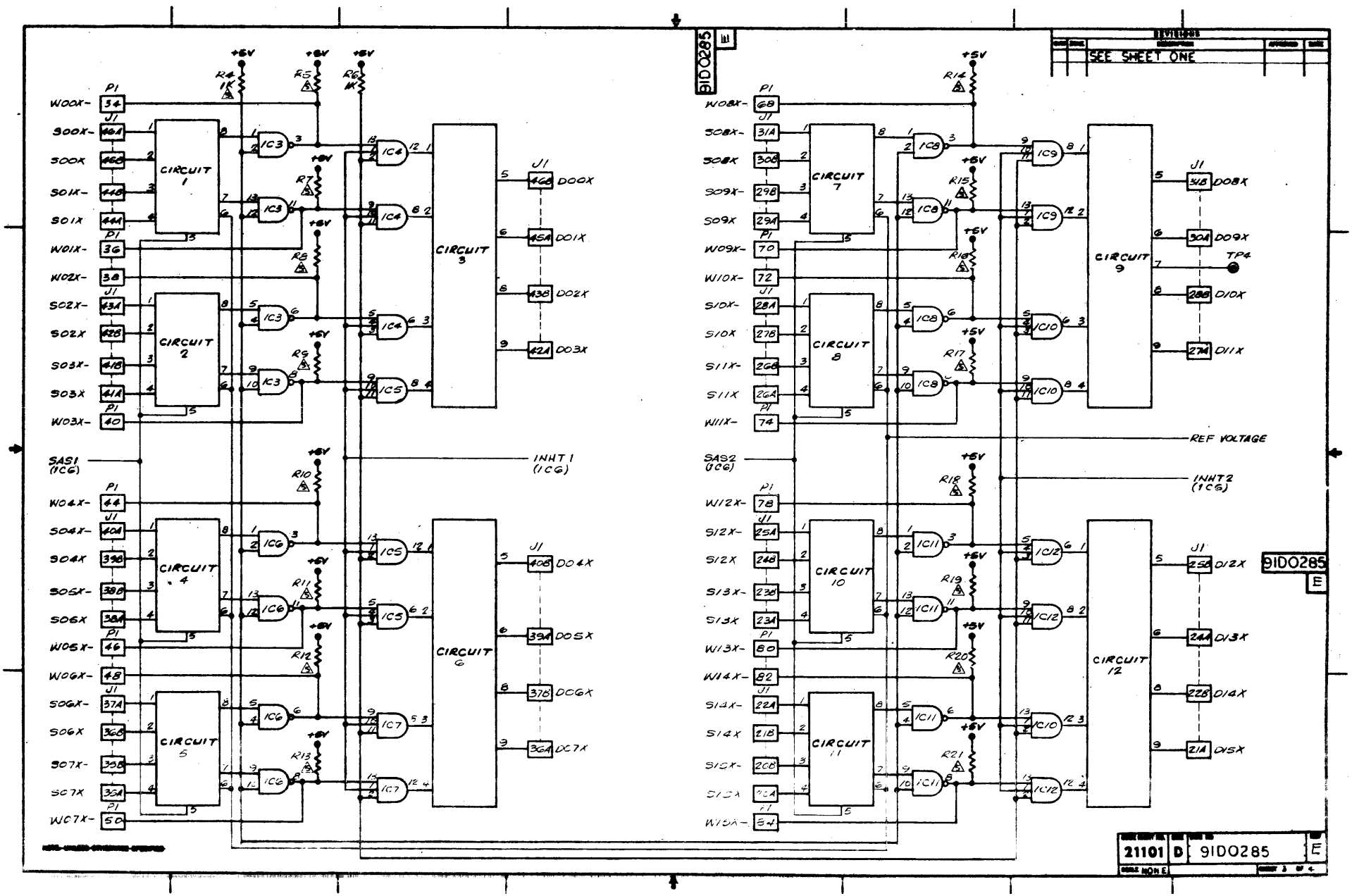

SEE SHEET ONE
REVISIONS
CIRCUIT 1
CIRCUIT 2
CIRCUIT 3
CIRCUIT 4
CIRCUIT 5
CIRCUIT 6
CIRCUIT 7
CIRCUIT 8
CIRCUIT 9
CIRCUIT 10
CIRCUIT 11
CIRCUIT 12
SAS1 (1C6)
SAS2 (1C6)
INHT 1 (1C6)
INHT 2 (1C6)
REF VOLTAGE
TP4
+5V
91D0285
21101
D
91D0285
E

91D0285 E

REVISIONS

ZONE	DESCRIPTION	APPROVED	DATE
	SEE SHEET ONE		

CONNECTOR P1

PIN	FUNCTION	SHEET
1	G SIG	
2	G SIG	
3	G SIG	
4	G SIG	
5	G SIG	
6	CA0X-X	
7	CC0X-X	
8	CA2X-X	
9	CC2X-X	
10	CA4X-X	
11	CC4X-X	
12		
13	CCGX-X	
14		
15	CAGX-X	
16		
17	G SIG	
18	YSGX-X	
19	G SIG	
20	YS7X-X	
21	G SIG	
22	YS4X-X	
23	G SIG	
24	YS5X-X	
25	G SIG	
26	YS2X-X	
27	G SIG	
28	YS3X-X	
29	G SIG	
30	YS0X-X	
31	G SIG	
32	YS1X-X	
33	G SIG	
34	W00X-	3
35	G SIG	
36	W01X-	3
37	G SIG	
38	W02X-	3
39	G SIG	
40	W03X-	3
41	G SIG	

CONNECTOR P1

PIN	FUNCTION	SHEET
42	+5V	
43	G SIG	
44	W04X-	3
45	G SIG	
46	W05X-	3
47	G SIG	
48	W06X-	3
49	G SIG	
50	W07X-	3
51	G SIG	
52	W16X-	
53	G SIG	
54	W17X-	
55	G SIG	
56	INHT-	1
57	G SIG	
58	SSLX-	1
59	G SIG	
60	SASX-	1
63	G SIG	
64	INHE-X	1
65	G SIG	
66	G SIG	
67	G SIG	
68	W08X-	3
69	G SIG	
70	W09X-	3
71	G SIG	
72	W10X-	3
73	G SIG	
74	W11X-	3
75	G SIG	
76	G SIG	
77	G SIG	
78	W12X-	3
79	G SIG	
80	W13X-	3
81	G SIG	
82	W14X-	3
83	G SIG	
84	W15X-	3

CONNECTOR P1

PIN	FUNCTION	SHEET
85	G SIG	
86	SASX-	
87	G SIG	
88	TSHX	
89	G SIG	
90	TSLX	
91	G SIG	
92	XSOX-X	
93	G SIG	
94	XS1X-X	
95	G SIG	
96	XS2X-X	
97	G SIG	
98	XS3X-X	
99	G SIG	
100	XS4X-X	
101	G SIG	
102	XS5X-X	
103	G SIG	
104	XS6X-X	
105	CA7X-X	
106	XS7X-X	
107	CA5X-X	
108		
109	CA3X-X	
110	CC7X-X	
111	CC1X-X	
112	CC5X-X	
113	CA1X-X	
114	CC3X-X	
115	-5V	
116	+5V	
117	+12V	
118	+12V	
119	+12V	
120	+12V	
121	GSIG	
122	GSIG	

CONNECTOR J1

PIN	FUNCTION	SHEET
1A	G SIG	
1B	G SIG	
2A	CA1X-X	
2B	CA1X-X	
3A	CC1X-X	
3B	CC1X-X	
4A	CA3X-X	
4B	CA3X-X	
5A	CC3X-X	
5B	CC3X-X	
6A	CA5X-X	
6B	CA5X-X	
7A	CC5X-X	
7B	CC5X-X	
8A	CA7X-X	
8B	CA7X-X	
9A	CC7X-X	
9B	CC7X-X	
10A		
10B		
11A		
11B		
12A		
12B		
13A	XSGX-X	
13B	XS7X-X	
14A	XS4X-X	
14B	XS5X-X	
15A	XS2X-X	
15B	XS3X-X	
16A	XSOX-X	
16B	XS1X-X	
17A	TSLX	
17B	TSLX	
18A	G SIG	
18B	G SIG	
19A	TSHX	
19B	TSHX	

CONNECTOR J1

PIN	FUNCTION	SHEET
20A	S15X	3
20B	S15X-	3
21A	D15X	3
21B	S14X	3
22A	S14X-	3
22B	D14X	3
23A	S13X	3
23B	S13X-	3
24A	D13X	3
24B	S12X	3
25A	S12X-	3
25B	D12X	3
26A	S11X	3
26B	S11X-	3
27A	D11X	3
27B	S10X	3
28A	S10X-	3
28B	D10X	3
29A	S09X	3
29B	S09X-	3
30A	D09X	3
30B	S08X	3
31A	S08X-	3
31B	D08X	3
32A	S17X	
32B	S17X-	
33A	D17X	
33B	S1GX	
34A	S1GX-	
34B	D1GX	
35A	S07X	3
35B	S07X-	3
36A	D07X	3
36B	S06X	3
37A	S06X-	3
37B	D06X	3
38A	S05X	3
38B	S05X-	3

CONNECTOR J1

PIN	FUNCTION	SHEET
39A	D05X	3
39B	S04X	3
40A	S04X-	3
40B	D04X	3
41A	S03X	3
41B	S03X-	3
42A	D03X	3
42B	S02X	3
43A	S02X-	3
43B	D02X	3
44A	S01X	
44B	S01X-	
45A	D01X	3
45B	S00X	
46A	S00X-	
46B	D00X	3
47A	G SIG	
47B	G SIG	
48A	G SIG	
48B	G SIG	
49A	G SIG	
49B	G SIG	
50A	YS1X-X	
50B	YS0X-X	
51A	YS3X-X	
51B	YS2X-X	
52A	YS5X-X	
52B	YS4X-X	
53A	YS7X-X	
53B	YSGX-X	
54A		
54B		
55A		
55B		
56A		
56B		
57A	CAGX-X	
57B	CAGX-X	

CONNECTOR J1

PIN	FUNCTION	SHEET
58A	CCGX-X	
58B	CCGX-X	
59A	CA4X-X	
59B	CA4X-X	
60A	CC4X-X	
60B	CC4X-X	
61A	CA2X-X	
61B	CA2X-X	
62A	CC2X-X	
62B	CC2X-X	
63A	CA0X-X	
63B	CA0X-X	
64A	CC0X-X	
64B	CC0X-X	
65A	G SIG	
65B	G SIG	

91D0285 E

NOTE: UNLESS OTHERWISE SPECIFIED

CODE IDENT NO.	SIZE	DWG NO	REV
21101	D	91D0285	E
SCALE NONE		SHEET 4 OF 4	

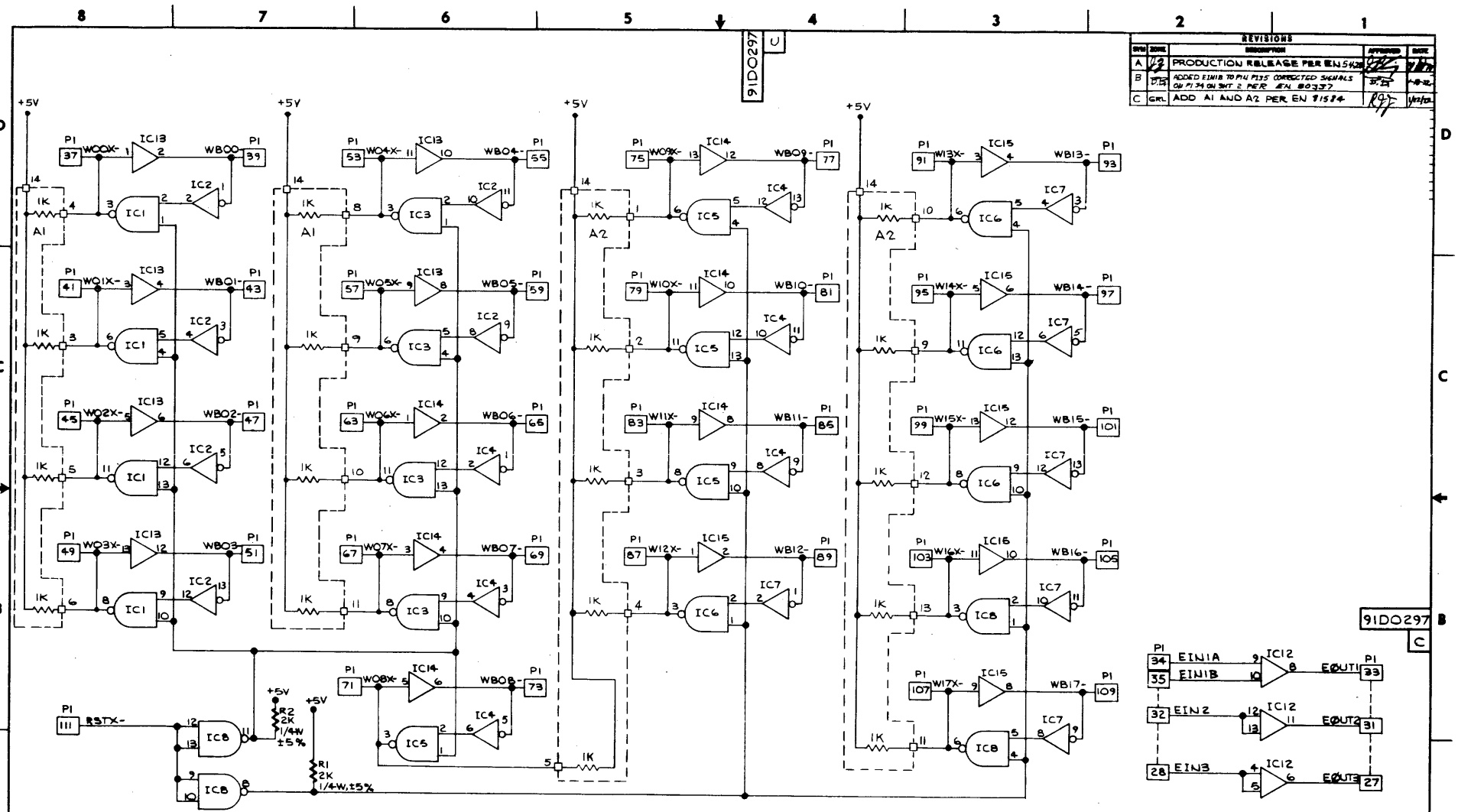

REVISIONS				
SYM	ZONE	DESCRIPTION	APPROVED	DATE
A		PRODUCTION RELEASE PER EN 5428		
B		ADDED EIN1B TO PIN P135 CORRECTED SIGNALS ON P134 ON SHT 2 PER EN 80337		
C	GRL	ADD A1 AND A2 PER EN 81584		

1. IC POWER & GROUND DISTRIBUTION
+5V - PIN 14 FOR ALL IC'S
GRD - PIN 7 FOR ALL IC'S

NOTE: UNLESS OTHERWISE SPECIFIED

REFERENCE DWGS
44D0521 ASSEMBLY
44P0521 PARTS LIST
40D0469 BD DETAIL

REFERENCE DESIGNATIONS	
USED	NOT USED
R1,2	
C1 THRU C6	
IC1 THRU IC15	
P1	
A2	

MODEL NO. 620L
NEXT ASSY 44D0521
MATERIAL
FINISH

DIMENSIONS ARE IN INCHES AND AFTER FINISHING
TOLERANCES UNLESS OTHERWISE SPECIFIED
.X ± .1
.XX ± .05
.XXX ± .005
ANGLES ± 0.5°
BREAK ALL SHARP EDGES .005 R APPROX
DO NOT SCALE DRAWING

DR 3/10/71
CHK 4-1-71
DSGN
ENGR 4/6/71
APPD 4/6/71
APPD 4/6/71

THIS DOCUMENT MAY CONTAIN PROPRIETARY INFORMATION AND SUCH INFORMATION MAY NOT BE DISCLOSED TO OTHERS FOR ANY PURPOSE OR USED TO PRODUCE THE ARTICLE OR SUBJECT, WITHOUT WRITTEN PERMISSION FROM VDM

varian data machines /a varian subsidiary
2722 wickstrom drive / irvine / california / 92664

TITLE
LOGIC DIAG-
MEMORY BUFFER

CODE IDENT NO. 21101 | SIZE D | DWG NO 91D0297 | REV C
SCALE —— | SHEET 1 OF 2

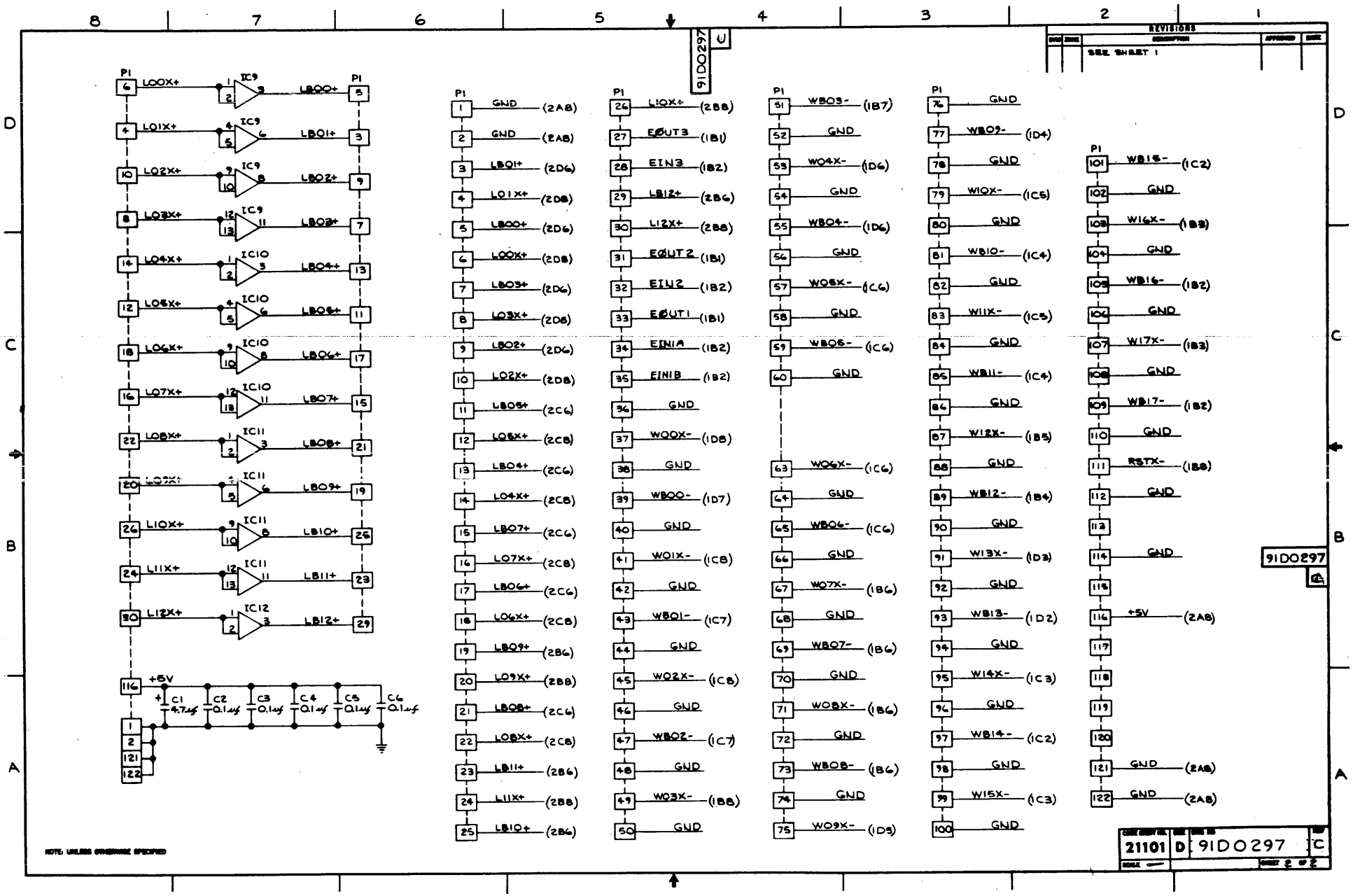
8
7
6
5
4
3
2
1
D
C
B
A
91D0297 C
REVISIONS
SEE SHEET 1
P1
LOOX+
LBOO+
LO1X+
LBO1+
LO2X+
LBO2+
LO3X+
LBO3+
LO4X+
LBO4+
LO5X+
LBO5+
LO6X+
LBO6+
LO7X+
LBO7+
LO8X+
LBO8+
LO9X+
LBO9+
L10X+
LB10+
L11X+
LB11+
L12X+
LB12+
IC9
IC10
IC11
IC12
+5V
C1 4.7uf
C2 0.1uf
C3 0.1uf
C4 0.1uf
C5 0.1uf
C6 0.1uf
NOTE: UNLESS OTHERWISE SPECIFIED
GND (2A8)
LBO1+ (2D6)
LO1X+ (2D8)
LBOO+ (2D6)
LOOX+ (2D8)
LBO3+ (2D6)
LO3X+ (2D8)
LBO2+ (2D6)
LO2X+ (2D8)
LBO5+ (2C6)
LO5X+ (2C8)
LBO4+ (2C6)
LO4X+ (2C8)
LBO7+ (2C6)
LO7X+ (2C8)
LBO6+ (2C6)
LO6X+ (2C8)
LBO9+ (2B6)
LO9X+ (2B8)
LBO8+ (2C6)
LO8X+ (2C8)
LB11+ (2B6)
L11X+ (2B8)
LB10+ (2B6)
L10X+ (2B8)
EOUT3 (1B1)
EIN3 (1B2)
LB12+ (2B6)
L12X+ (2B8)
EOUT2 (1B1)
EIN2 (1B2)
EOUT1 (1B1)
EINIA (1B2)
EINIB (1B2)
WOOX- (1D8)
WBOO- (1D7)
WO1X- (1C8)
WBO1- (1C7)
WO2X- (1C8)
WBO2- (1C7)
WO3X- (1B8)
WBO3- (1B7)
WO4X- (1D6)
WBO4- (1D6)
WO5X- (1C6)
WBO5- (1C6)
WO6X- (1C6)
WBO6- (1C6)
WO7X- (1B6)
WBO7- (1B6)
WO8X- (1B6)
WBO8- (1B6)
WO9X- (1D5)
WBO9- (1D4)
WB10- (1C4)
WB11- (1C4)
WB12- (1B4)
WB13- (1D2)
WB14- (1C2)
WB15- (1C2)
WB16- (1B2)
WB17- (1B2)
W1OX- (1C5)
W11X- (1C5)
W12X- (1B5)
W13X- (1D3)
W14X- (1C3)
W15X- (1C3)
W16X- (1B3)
W17X- (1B3)
RSTX- (1B8)
+5V (2A8)
91D0297 C
21101 D 91D0297 C

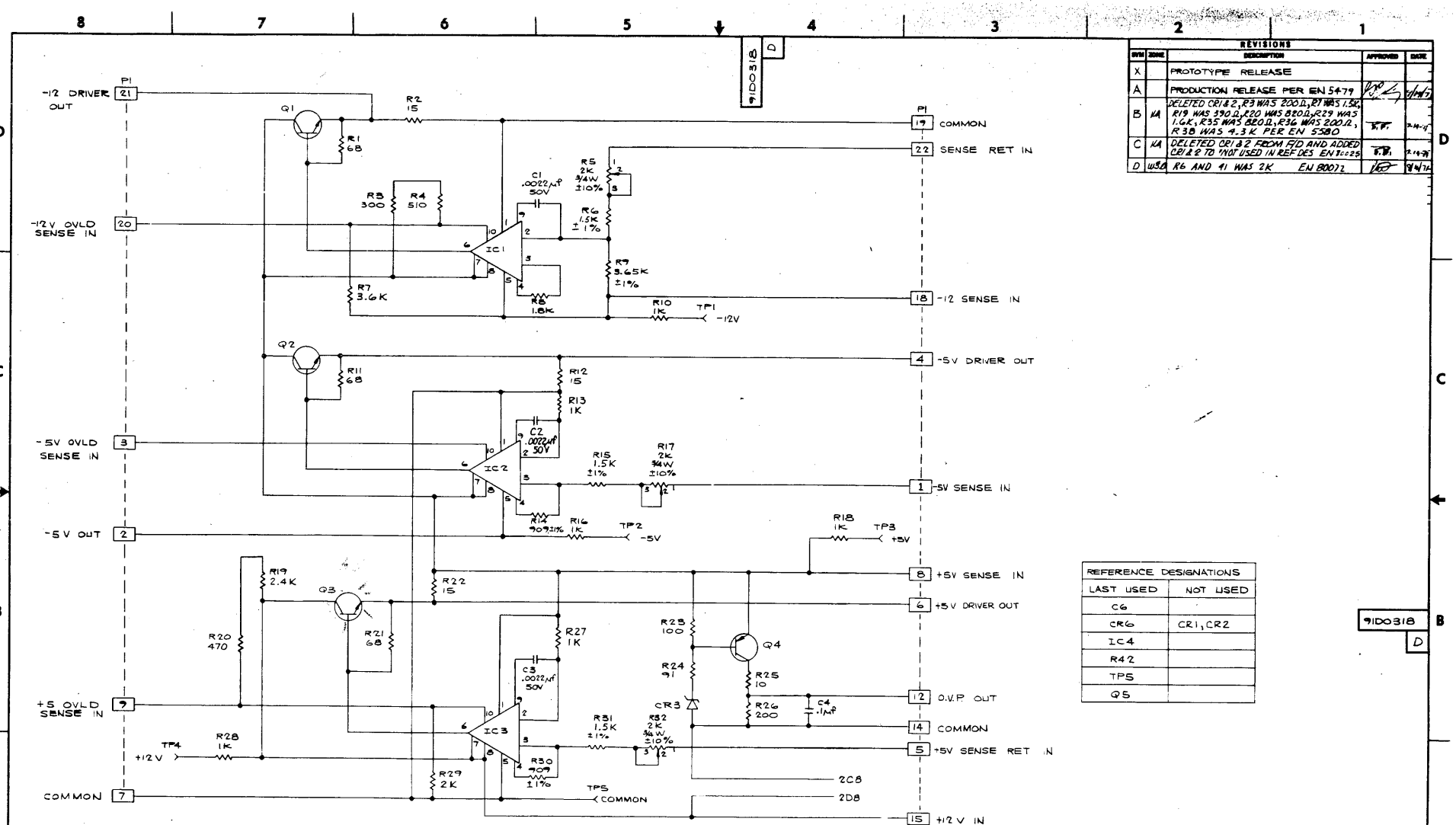

REVISIONS				
SYM	ZONE	DESCRIPTION	APPROVED	DATE
X		PROTOTYPE RELEASE		
A		PRODUCTION RELEASE PER EN 5479		
B	1A	DELETED CR1 & 2, R3 WAS 200Ω, R7 WAS 1.5K, R19 WAS 390Ω, R20 WAS 820Ω, R29 WAS 1.6K, R35 WAS 820Ω, R36 WAS 200Ω, R38 WAS 4.3K PER EN 5580		
C	1A	DELETED CR1 & 2 FROM F/D AND ADDED CR1 & 2 TO "NOT USED IN REF DES EN 5625		
D	W5A	R6 AND 41 WAS 2K EN 80072		

REFERENCE DESIGNATIONS	
LAST USED	NOT USED
C6	
CR6	CR1, CR2
IC4	
R42	
TP5	
Q5	

REFERENCE DRAWINGS
44D0528 ___ ASSEMBLY
44P0528 ___ PARTS LIST
97D0580 ___ ARTWORK
97D0608 ___ SOLDER MASK
97C0609 ___ SILKSCREEN
4DD0475 ___ BOARD DETAIL

1. ALL RESISTORS ARE IN OHMS, ¼W, ±5%

NOTE: UNLESS OTHERWISE SPECIFIED

MODEL NO.	620/L	DR	3-30-71
NEXT ASSY	44D0528	CHK	4/6/71
MATERIAL		DSGN	3-30-71
FINISH		ENGR	4-13-71
		APPD	4-13-71
		APPD	

DIMENSIONS ARE IN INCHES AND AFTER FINISHING
TOLERANCES UNLESS OTHERWISE SPECIFIED
X ±.1
.XX ±.02
.XXX ±.010
ANGLES ± 0.5°
BREAK ALL SHARP EDGES .010 R APPROX
DO NOT SCALE DRAWING

THIS DOCUMENT MAY CONTAIN PROPRIETARY INFORMATION AND SUCH INFORMATION MAY NOT BE DISCLOSED TO OTHERS FOR ANY PURPOSE OR USED TO PRODUCE THE ARTICLE OR SUBJECT, WITHOUT WRITTEN PERMISSION FROM VDM

varian data machines / a varian subsidiary
2722 michelson drive / irvine / california / 92664

TITLE: LOGIC - REGULATOR BOARD

CODE IDENT NO.	SIZE	DWG NO	REV
21101	D	91D0318	D

SCALE —

SHEET 1 OF 2

91D0318 D

REVISIONS				
SYM	ZONE	DESCRIPTION	APPROVED	DATE
		SEE SHEET 1		

9100318 D

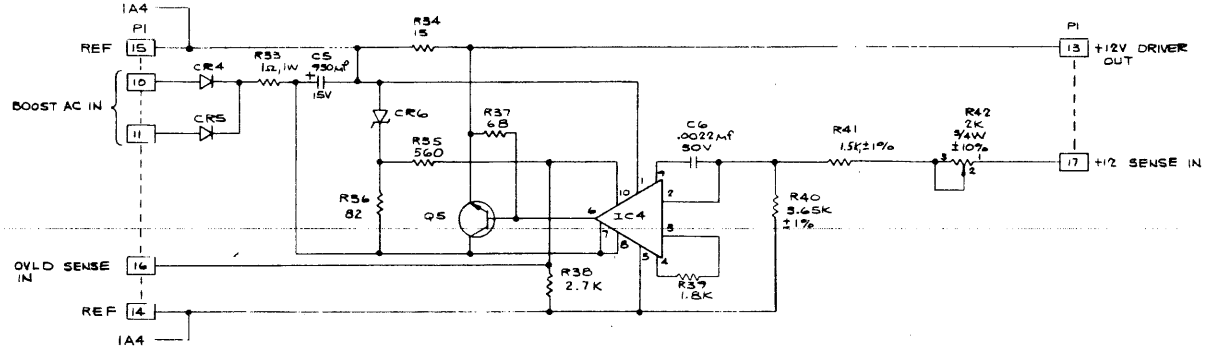

9100318 B D

NOTE: UNLESS OTHERWISE SPECIFIED

CODE IDENT NO.	SIZE	DWG NO	REV
21101	D	9100318	D
SCALE —		SHEET 2 OF 2	

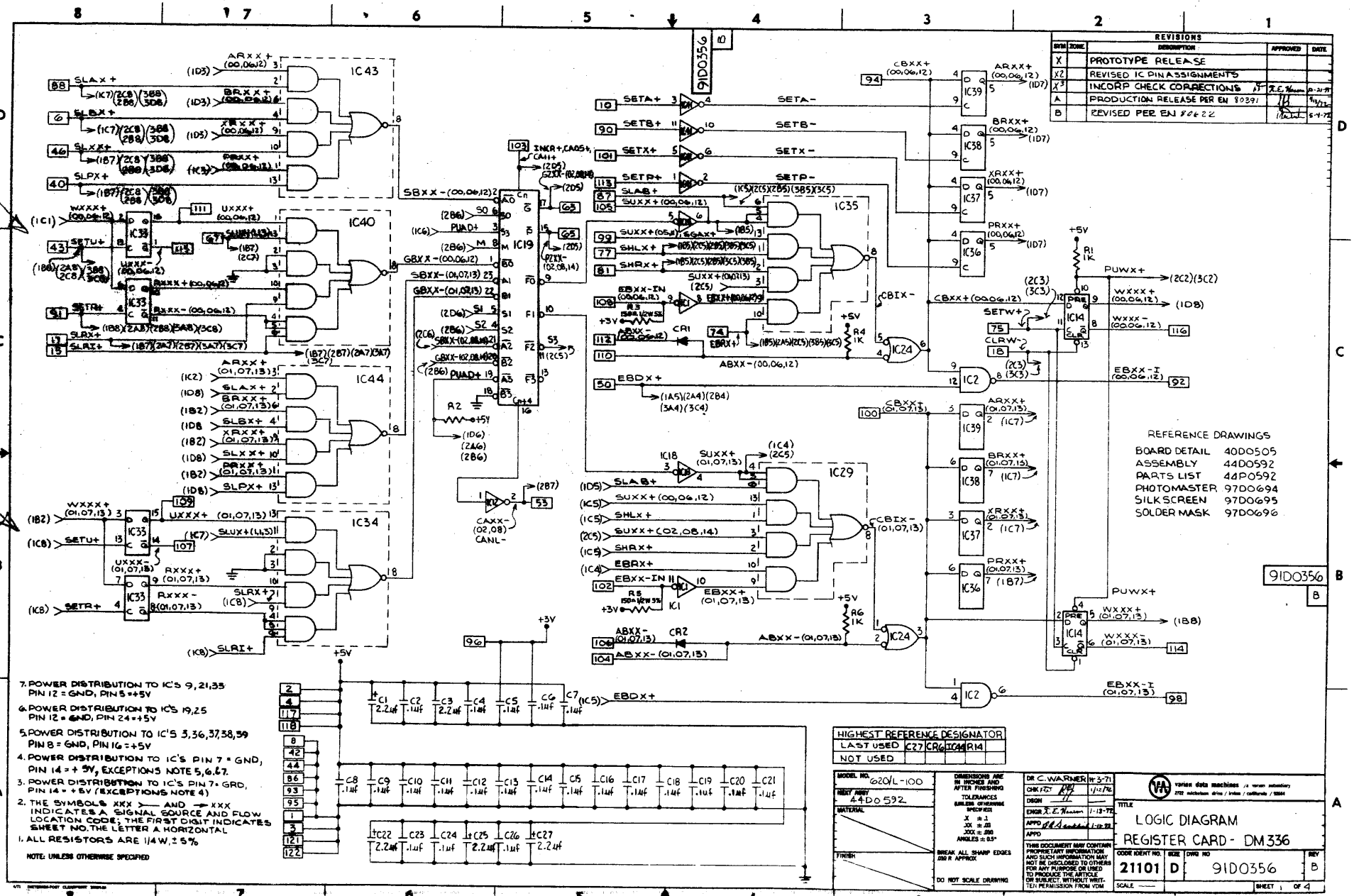

REVISIONS
SYM | ZONE | DESCRIPTION | APPROVED | DATE
X | PROTOTYPE RELEASE
X2 | REVISED IC PIN ASSIGNMENTS
X3 | INCORP CHECK CORRECTIONS
A | PRODUCTION RELEASE PER EN 80391
B | REVISED PER EN 80622
REFERENCE DRAWINGS
BOARD DETAIL 40D0505
ASSEMBLY 44D0592
PARTS LIST 44P0592
PHOTOMASTER 97D0694
SILK SCREEN 97D0695
SOLDER MASK 97D0696
7. POWER DISTRIBUTION TO IC'S 9, 21, 33 PIN 12 = GND, PIN 5 = +5V
6. POWER DISTRIBUTION TO IC'S 19, 25 PIN 12 = GND, PIN 24 = +5V
5. POWER DISTRIBUTION TO IC'S 3, 36, 37, 38, 39 PIN 8 = GND, PIN 16 = +5V
4. POWER DISTRIBUTION TO IC'S PIN 7 = GND, PIN 14 = +5V, EXCEPTIONS NOTE 5, 6, & 7.
3. POWER DISTRIBUTION TO IC'S PIN 7 = GRD, PIN 14 = +5V (EXCEPTIONS NOTE 4)
2. THE SYMBOLS XXX >— AND —> XXX INDICATES A SIGNAL SOURCE AND FLOW LOCATION CODE; THE FIRST DIGIT INDICATES SHEET NO. THE LETTER A HORIZONTAL
1. ALL RESISTORS ARE 1/4 W, ± 5%
NOTE: UNLESS OTHERWISE SPECIFIED
HIGHEST REFERENCE DESIGNATOR
LAST USED C27 CR6 IC44 R14
NOT USED
MODEL NO. 620/L-100
NEXT ASSY 44D0592
MATERIAL
FINISH
DIMENSIONS ARE IN INCHES AND AFTER FINISHING
TOLERANCES (UNLESS OTHERWISE SPECIFIED)
X ± .1
.XX ± .03
.XXX ± .010
ANGLES ± 0.5°
BREAK ALL SHARP EDGES .010 R APPROX
DO NOT SCALE DRAWING
DR C. WARNER 11-3-71
CHK 1/12/72
DSGN
ENGR 1-13-72
APPD 1-13-72
APPD
THIS DOCUMENT MAY CONTAIN PROPRIETARY INFORMATION AND SUCH INFORMATION MAY NOT BE DISCLOSED TO OTHERS FOR ANY PURPOSE OR USED TO PRODUCE THE ARTICLE OR SUBJECT, WITHOUT WRITTEN PERMISSION FROM VDM
varian data machines / a varian subsidiary
2722 michelson drive / irvine / california / 92664
TITLE
LOGIC DIAGRAM
REGISTER CARD - DM336
CODE IDENT NO. 21101
SIZE D
DWG NO 91D0356
REV B
SCALE —
SHEET 1 OF 4

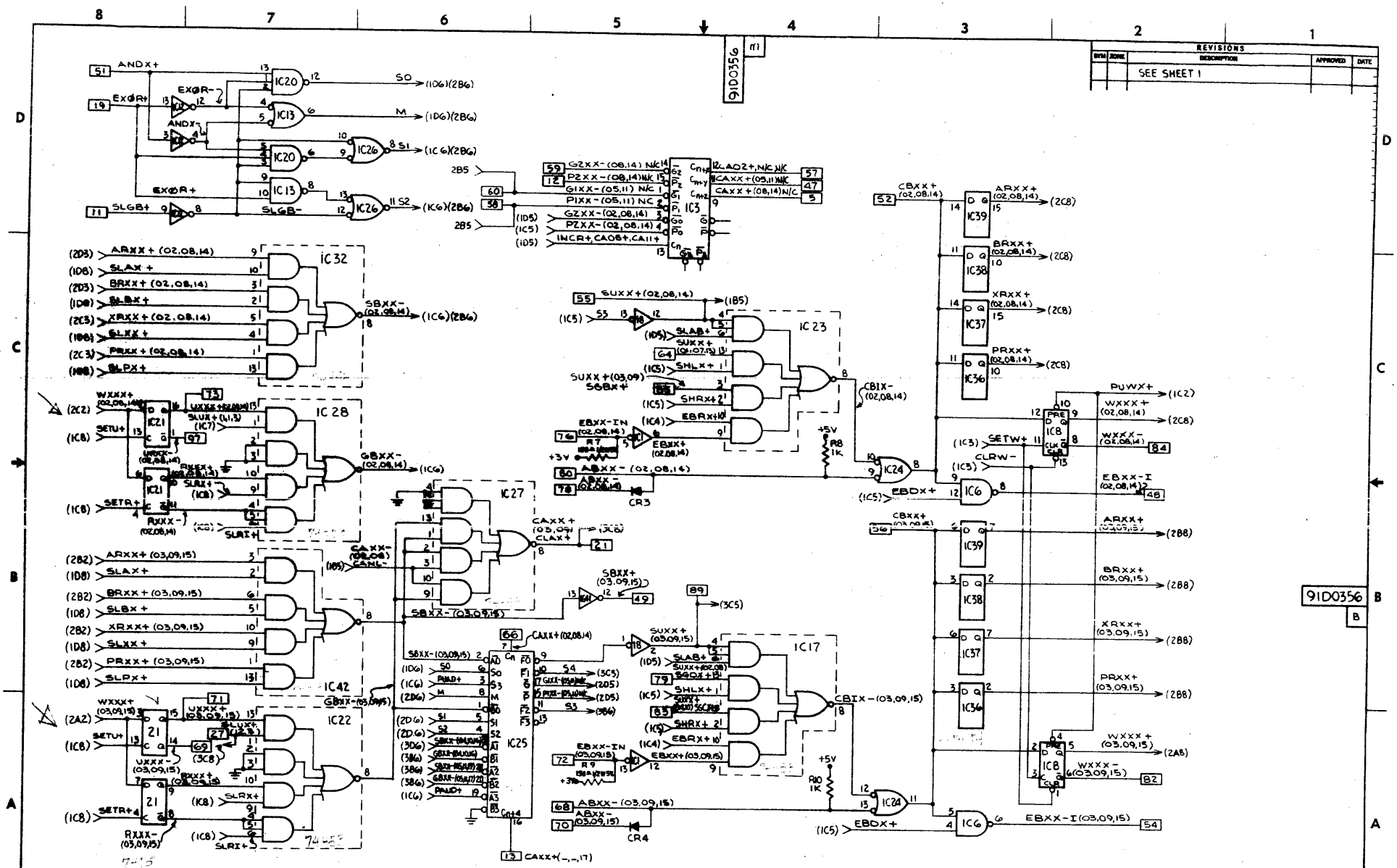

REVISIONS
SYM ZONE DESCRIPTION APPROVED DATE
SEE SHEET 1
91D0356
NOTE: UNLESS OTHERWISE SPECIFIED
CODE IDENT NO. 21101
SIZE D
DWG NO 91D0356
REV B
SCALE
SHEET 2 OF 4

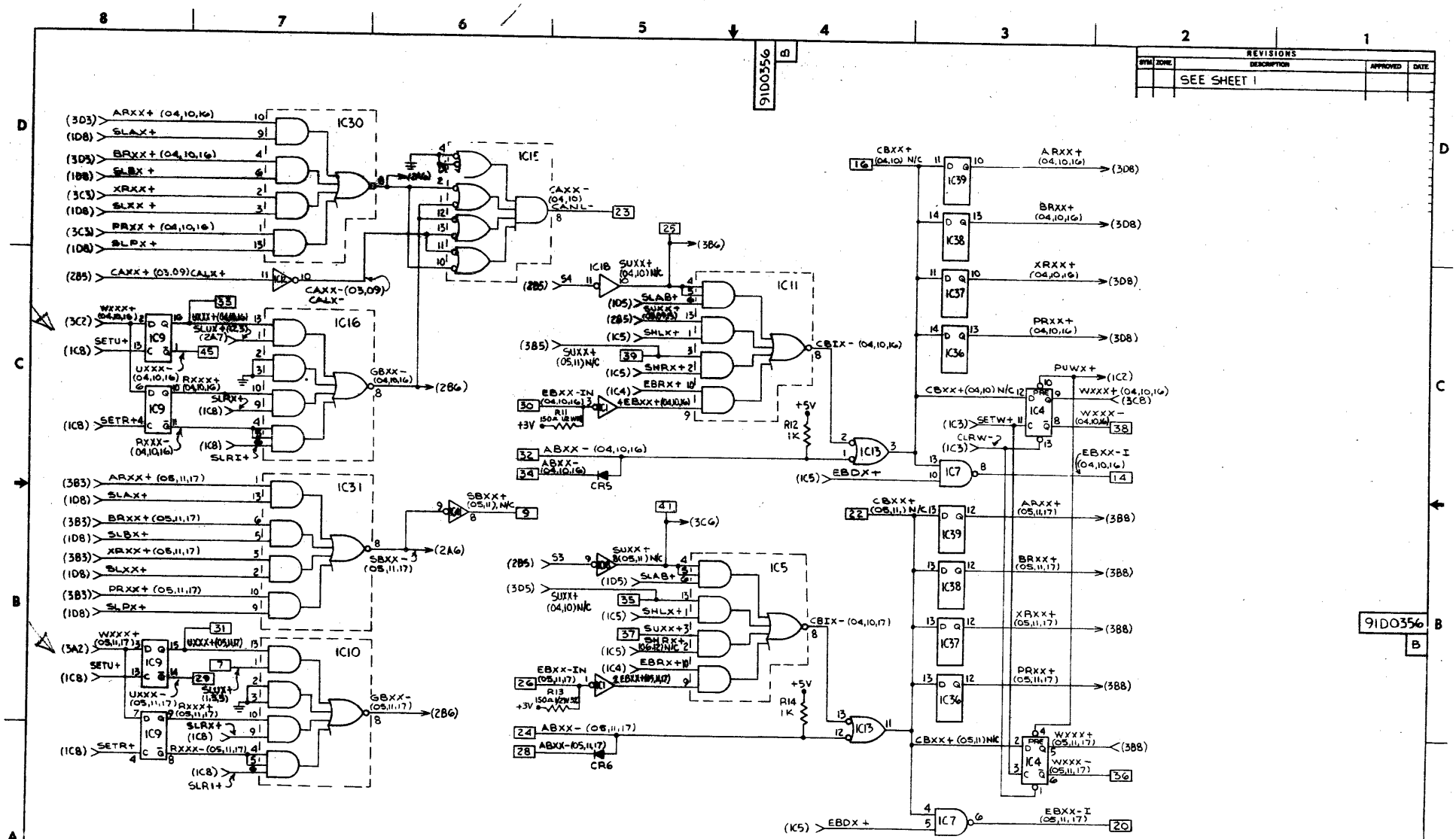
91D0356
REVISIONS
SEE SHEET 1
IC30
IC15
IC16
IC31
IC10
IC18
IC11
IC5
IC39
IC38
IC37
IC36
IC4
IC7
IC13
IC9
ARXX+ (04,10,16)
BRXX+ (04,10,16)
XRXX+ (04,10,16)
PRXX+ (04,10,16)
SLAX+
SLBX+
SLXX+
SLPX+
CAXX+ (03,09) CALX+
CAXX- (03,09) CALX-
CAXX- (04,10) CALC-
GBXX- (04,10,16)
SUXX+ (04,10) N/C
SLAB+
SHLX+
SHRX+
EBRX+
CBIX- (04,10,16)
EBXX-IN (04,10,16)
EBXX+ (04,10,16)
ABXX- (04,10,16)
ABXX+ (04,10,16)
CR5
+5V
+3V
R11 150A 1/8W MF
R12 1K
CBXX+ (04,10) N/C
PUWX+
WXXX+ (04,10,16)
WXXX- (04,10,16)
SETW+
CLRW-
EBXX-I (04,10,16)
EBDX+
ARXX+ (05,11,17)
BRXX+ (05,11,17)
XRXX+ (05,11,17)
PRXX+ (05,11,17)
SBXX+ (05,11) N/C
SBXX- (05,11,17)
GBXX- (05,11,17)
SUXX+ (05,11) N/C
SHLX+
SHRX+
EBRX+
CBIX- (04,10,17)
EBXX-IN (05,11,17)
EBXX+ (05,11,17)
ABXX- (05,11,17)
ABXX+ (05,11,17)
CR6
R13 150A 1/8W MF
R14 1K
CBXX+ (05,11) N/C
WXXX+ (05,11,17)
WXXX- (05,11,17)
CBXX+ (05,11) N/C
EBXX-I (05,11,17)
SETU+
SETR+
UXXX- (04,10,16)
RXXX+ (04,10,16)
RXXX- (04,10,16)
SLRI+
UXXX- (05,11,17)
RXXX+ (05,11,17)
RXXX- (05,11,17)
WXXX+ (04,10,16)
WXXX+ (05,11,17)
SUXX+ (2A7)
SUXX+ (1B5)
SUXX+ (04,10) N/C
SUXX+ (05,11) N/C
SUXX+ (05,11) N/C
SUXX+ (04,10) N/C

REVISIONS				
SYM	ZONE	DESCRIPTION	APPROVED	DATE
		SEE SHEET 1		

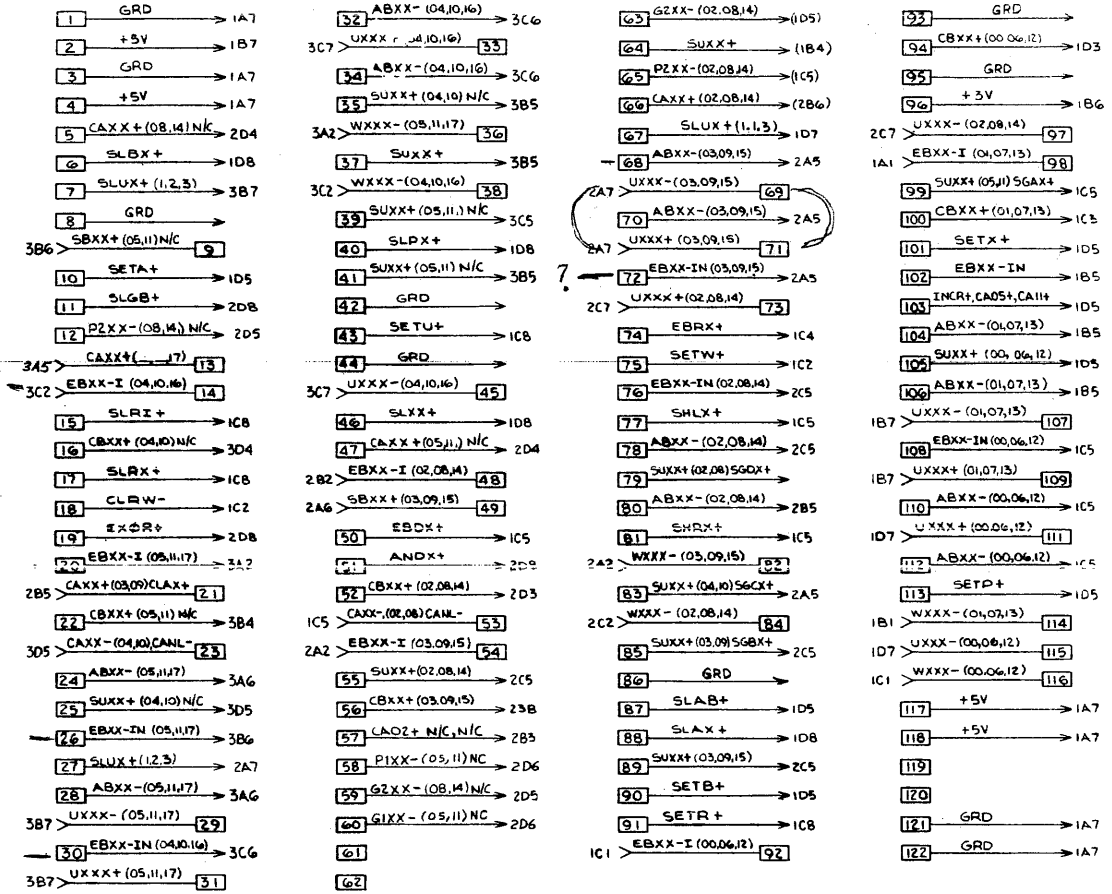

NOTE: UNLESS OTHERWISE SPECIFIED

CODE IDENT NO.	SIZE	DWG NO	REV
21101	D	91D0356	B
SCALE		SHEET 4 OF 4	

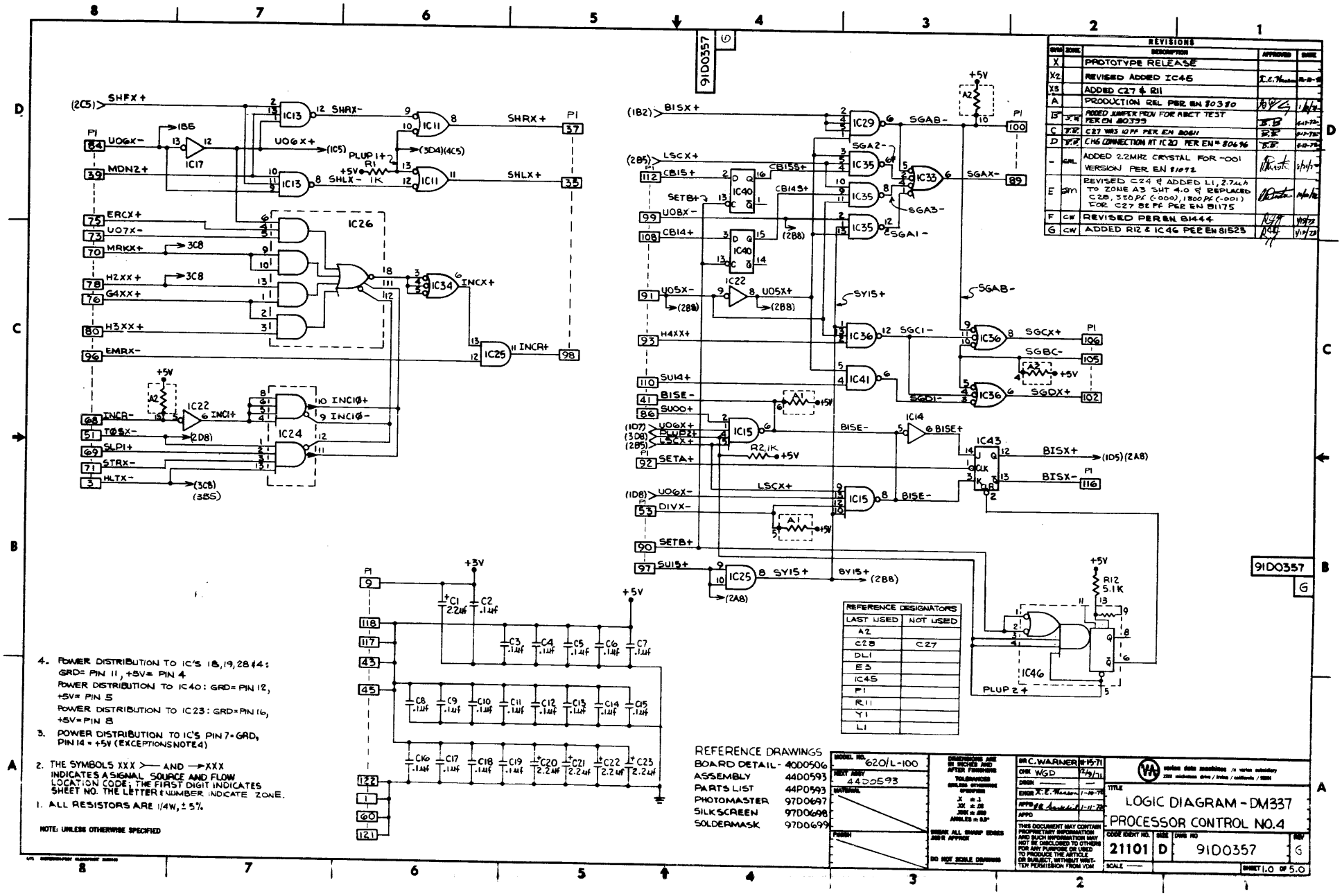
91D0357
REVISIONS
X PROTOTYPE RELEASE
X2 REVISED ADDED IC46
X5 ADDED C27 & R11
A PRODUCTION REL PER EN 80380
B ADDED JUMPER FROM FOR ABCT TEST PER EN 80399
C C27 WAS 10 PF PER EN 80611
D CHG CONNECTION AT IC20 PER EN# 80696
- ADDED 2.2MHZ CRYSTAL FOR -001 VERSION PER EN 81072
E REVISED C24 & ADDED L1, 2.7uH TO ZONE A3 SHT 4.0 & REPLACED C28, 330 PF (-000), 1800 PF (-001) FOR C27 BE PF PER EN 81175
F REVISED PER EN 81444
G ADDED R12 & IC46 PER EN 81523
SHFX+
UOGX-
MDN2+
ERCX+
UO7X-
MRKX+
H2XX+
G4XX+
H3XX+
EMRX-
INCR-
T@SX-
SLPI+
STRX-
HLTX-
SHRX-
SHRX+
SHLX-
SHLX+
UOGX+
PLUP1+
R1 1K
+5V
IC13
IC17
IC11
IC26
IC34
IC25
IC22
IC24
INCX+
INCR+
INCI+
INCI@+
INCI@-
BISX+
LSCX+
SETB+
U08X-
CB14+
U05X-
H4XX+
SU14+
BISE-
SU00+
U06X+
SU02+
SETA+
U06X-
DIVX-
SETB+
SU15+
SY15+
8V15+
IC29
IC35
IC33
IC40
IC36
IC41
IC15
IC14
IC43
IC25
SGAB-
SGAX-
SGA2-
SGA3-
SGA1-
SGAB-
SGC1-
SGCX+
SGBC-
SGDI-
SGDX+
BISE-
BISE+
BISX+
BISX-
R2 1K
+5V
A1
A2
A3
IC46
R12 5.1K
PLUP2+
+3V
C1 22uF
C2 .1uF
C3 .1uF
C4 .1uF
C5 .1uF
C6 .1uF
C7 .1uF
C8 .1uF
C9 .1uF
C10 .1uF
C11 .1uF
C12 .1uF
C13 .1uF
C14 .1uF
C15 .1uF
C16 .1uF
C17 .1uF
C18 .1uF
C19 .1uF
C20 2.2uF
C21 2.2uF
C22 2.2uF
C23 2.2uF
P1
(2C5)
(2D8)
(3C8)
(3B5)
(3D4)(4C5)
(2B8)
(2A8)
(1D5)(2A8)
(1B2)
(2B5)
(1D7)
(3D8)
(2B5)
(1D8)
(1D5)
(2A8)
(2B8)
REFERENCE DESIGNATORS
LAST USED / NOT USED
A2
C28 / C27
DL1
E3
IC45
P1
R11
Y1
L1
4. POWER DISTRIBUTION TO IC'S 18,19,28 & 44: GRD= PIN 11, +5V= PIN 4
POWER DISTRIBUTION TO IC40: GRD= PIN 12, +5V= PIN 5
POWER DISTRIBUTION TO IC23: GRD=PIN 16, +5V=PIN 8
3. POWER DISTRIBUTION TO IC'S PIN 7=GRD, PIN 14 = +5V (EXCEPTIONS NOTE 4)
2. THE SYMBOLS XXX >— AND —>XXX INDICATES A SIGNAL SOURCE AND FLOW LOCATION CODE; THE FIRST DIGIT INDICATES SHEET NO. THE LETTER & NUMBER INDICATE ZONE.
1. ALL RESISTORS ARE 1/4W, ± 5%
NOTE: UNLESS OTHERWISE SPECIFIED
REFERENCE DRAWINGS
BOARD DETAIL - 4DD0506
ASSEMBLY 44D0593
PARTS LIST 44P0593
PHOTOMASTER 97D0697
SILKSCREEN 97D0698
SOLDERMASK 97D0699
MODEL NO. 620/L-100
NEXT ASSY 44D0593
DR C. WARNER 11-15-71
CHK WGD 12/9/71
DESIGN
ENGR K.E. Meador 1-10-72
APPD R.R. Lawrence 1-11-72
APPD
THIS DOCUMENT MAY CONTAIN PROPRIETARY INFORMATION AND SUCH INFORMATION MAY NOT BE DISCLOSED TO OTHERS FOR ANY PURPOSE OR USED TO PRODUCE THE ARTICLE OR SUBJECT, WITHOUT WRITTEN PERMISSION FROM VDM
DO NOT SCALE DRAWING
TITLE
LOGIC DIAGRAM - DM337
PROCESSOR CONTROL NO.4
CODE IDENT NO. 21101
SIZE D
DWG NO 91D0357
REV G
SCALE —
SHEET 1.0 OF 5.0

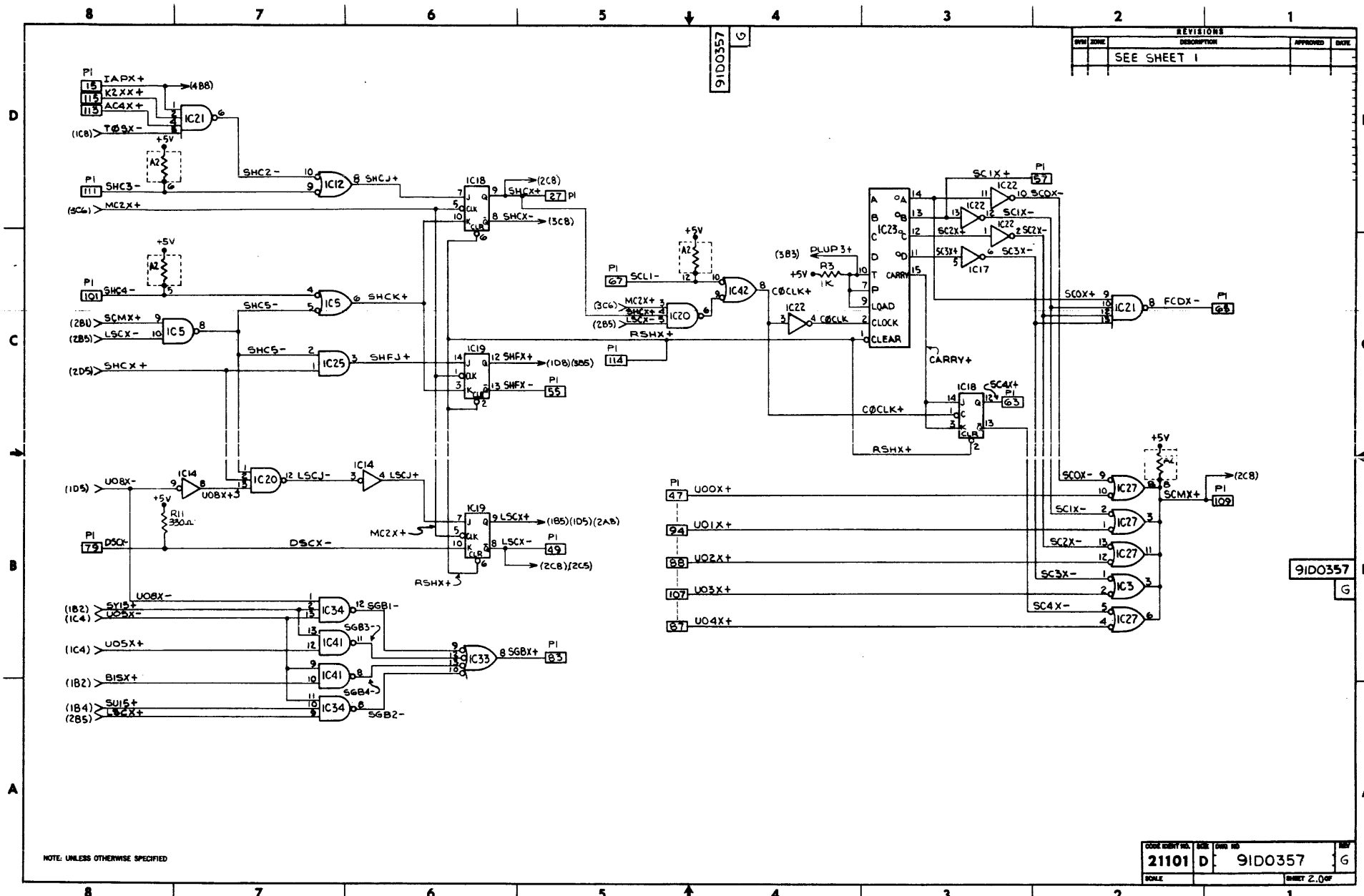
91D0357 G
REVISIONS
SEE SHEET 1
IAPX+
K2XX+
AC4X+
T@9X-
IC21
SHC2-
IC12
SHCJ+
SHC3-
MC2X+
IC18
SHCX+
SHCX-
SHC4-
IC5
SHCK+
SCMX+
LSCX-
SHC5-
IC25
SHFJ+
SHCX+
IC19
SHFX+
SHFX-
U08X-
IC14
IC20
LSCJ-
LSCJ+
U08X+3
R11 330Ω
DSCX+
DSCX-
MC2X+
LSCX+
LSCX-
RSHX+
SY15+
U05X-
IC34
SGB1-
U05X+
IC41
SGB3-
BISX+
SGB4-
SU15+
LSCX+
SGB2-
IC33
SGBX+
SCL1-
IC42
C@CLK+
PLUP3+
R3 1K
IC23
CARRY
LOAD
CLOCK
CLEAR
C@CLK
CARRY+
SC1X+
IC22
SCOX-
SC1X-
SC2X+
SC2X-
SC3X+
SC3X-
IC17
SCOX+
IC21
FCDX-
SC4X+
IC18
C@CLK+
RSHX+
IC27
SCMX+
SC1X-
SC2X-
SC3X-
IC3
SC4X-
U00X+
U01X+
U02X+
U03X+
U04X+
NOTE: UNLESS OTHERWISE SPECIFIED
21101 D 91D0357 G
SHEET 2 OF

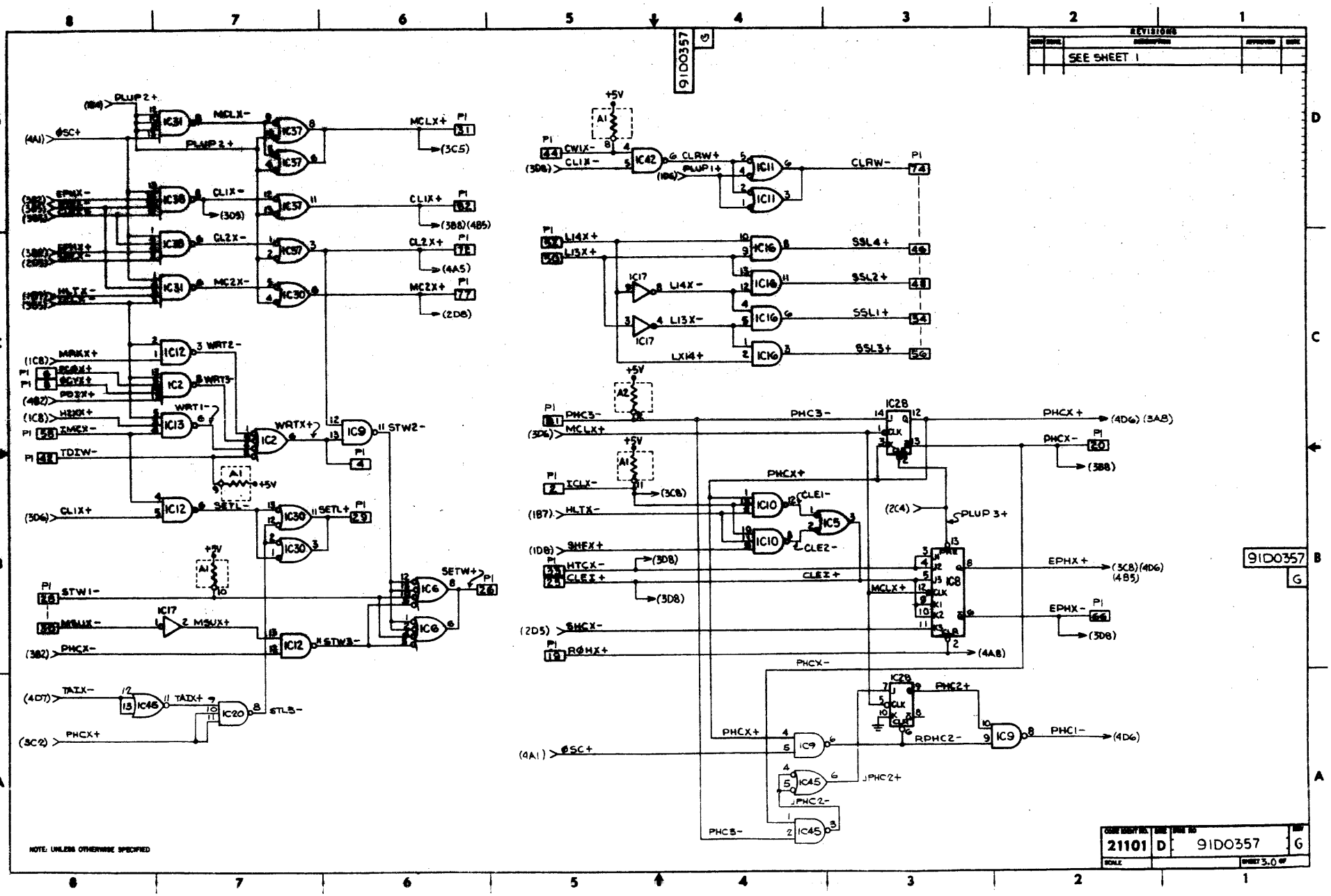
91D0357 G
REVISIONS
SEE SHEET 1
NOTE: UNLESS OTHERWISE SPECIFIED
21101 D 91D0357 G
SHEET 3 OF 3

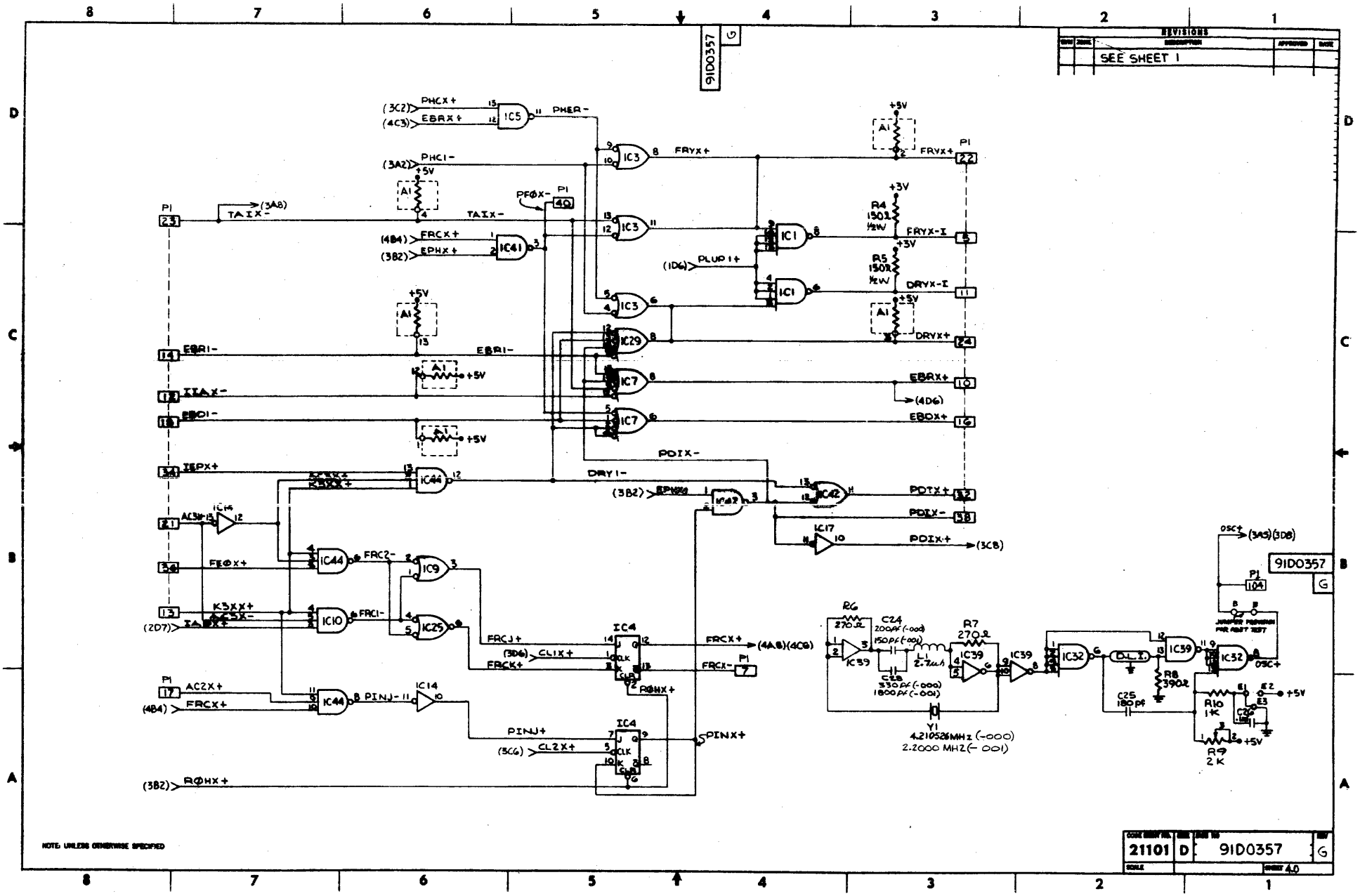

REVISIONS
SEE SHEET 1
91D0357
G
PHCX+
EBRX+
PHER-
PHCI-
FRYX+
TAIX-
PFØX-
FRCX+
EPHX+
PLUP1+
FRYX-I
DRYX-I
DRYX+
EBRI-
IIAX-
EBDI-
EBRX+
EBDX+
IEPX+
DRY1-
PDIX-
PDTX+
PDIX+
FEØX+
K3XX+
FRC2-
FRCI-
FRCJ+
CL1X+
FRCK+
FRCX+
FRCX-
RØHX+
AC2X+
PINJ-
PINJ+
CL2X+
PINX+
R4 150Ω ½W
R5 150Ω ½W
R6 270Ω
C24 200pf (-000) 150pf (-001)
C28 330pf (-000) 1800pf (-001)
L1 2.7uh
R7 270Ω
Y1 4.210526MHz (-000) 2.2000 MHZ (-001)
D.L.I.
R8 390Ω
C25 180pf
R10 1K
R9 2K
C26
OSC+
JUMPER PROVISION FOR ABET TEST
NOTE: UNLESS OTHERWISE SPECIFIED
21101
D
91D0357
G
SHEET 4.0

91D0357 G

REVISIONS				
		SEE SHEET 1		

1	GRD	→ 1A6	
2	ICLX-	→ 3B5	
3	HLTX-	→ 1B8	
3B6 >	WRTX+	4	
4C3 >	FRYX-I	5	
6	FC@X+	→ 3C8	
4B4 >	PRCX-	7	
8	@CY8+	→ 3C8	
9	+5V	→ 1B6	
4C3 >	EBAX+	10	
4C3 >	DRYX-I	11	
12	IIAX-	→ 4C8	
13	K3XX+	→ 4B8	
14	EBRI-	→ 4C8	
15	IAPX+	→ 2D8	
4C3 >	EBDX+	16	
17	AC2X+	→ 4A8	
18	EBDI-	→ 4C8	
19	R@HX+	→ 3A5	
3B2 >	PHCX-	20	
21	AC3X-	→ 4B8	
4D3 >	FRYX+	22	
23	TAIX-	→ 4D8	
4C3 >	DRYX+	24	
25	CLEI+	→ 3B5	
3B6 >	SETW+	26	
2D5 >	SHCX+	27	
28	STWI-	→ 3B8	
3B6 >	SETL+	29	
30	MSUX-	→ 3B8	
3D6 >	MCLX+	31	

4B3 >	PDTX+	32	
33	HTCX-	→ 3B5	
34	IEPX+	→ 4B8	
1D5 >	SHLX+	35	
36	FE@X+	→ 4B8	
1D5 >	SHRX+	37	
4B3 >	PDIX-	38	
39	MDMZ+	→ 1D8	
4D5 >	PFOX-	40	
41	BISE-	→ 1C5	
42	TDIW-	→ 3B8	
43	+5V	→ 1B6	
44	CWIX-	→ 3D5	
45	+5V	→ 1A6	
3C3 >	SSL4+	46	
47	U00X+	→ 2B5	
3C3 >	SSL2+	48	
2B5 >	LSCX-	49	
50	LI3X+	→ 3C5	
51	T@6X-	→ 1C8	
52	LI4X+	→ 3C5	
53	DIYX-	→ 1B5	
3C3 >	SSLI+	54	
2C5 >	SHFX-	55	
3C3 >	SSL3+	56	
2D2 >	SCIX+	57	
58	IMCX-	→ 3C8	
59			
60	GRD	→ 1A6	
61			
62			

2C3 >	SC4X+	63	
64			
2C1 >	FCDX-	65	
3B2 >	EPHX-	66	
67	SCLI-	→ 2C5	
68	INCR-	→ 1C8	
69	SLPI+	→ 1B8	
70	MRKX+	→ 1C8	
71	STRK-	→ 1B8	
3C6 >	CL2X+	72	
73	U07X-	→ 1C8	
3D5 >	CLRW-	74	
75	ERCX+	→ 1D8	
76	G4XX+	→ 1C8	
3C6 >	MC2X+	77	
78	H2XX+	→ 1C8	
79	DSCX-	→ 2B8	
80	H3XX+	→ 1C8	
81	PHC3-	→ 3C5	
3D6 >	CLIX+	82	
2B5 >	SGBX+	83	
84	U0GX-	→ 1D8	
85			
86	SU00+	→ 1C5	
87	U04X+	→ 2B5	
88	U02X+	→ 2B6	
1D2 >	SGAX-	89	
90	SETB+	→ 1B5	
91	U05X-	→ 1C5	
92	SETA+	→ 1B5	

93	H4XX+	→ 1C5	
94	UDIX+	→ 2B5	
95			
96	EMRX-	→ 1C8	
97	SU15+	→ 1B5	
1C5 >	INCR+	98	
99	U0BX-	→ 1D5	
1D2 >	SGAB-	100	
101	SHC4-	→ 2C8	
1C2 >	SGDX+	102	
103			
4B1 >	@SC+	104	
1C2 >	SGBC-	105	
1C2 >	SGCX+	106	
107	U03X+	→ 2B5	
108	CB14+	→ 1D5	
109	SCMX+	→ 2B1	
110	SUI4+	→ 1C5	
111	SHC3-	→ 2D8	
112	CB15+	→ 1D5	
113	AC4X+	→ 2D8	
114	RSHX+	→ 2C5	
115	K2XX+	→ 2D8	
1B2 >	BISX-	116	
117	+5V	→ 1B6	
118	+5V	→ 1B6	
119			
120			
121	GRD	→ 1A6	
122	GRD	→ 1A6	

91D0357 G

NOTE: UNLESS OTHERWISE SPECIFIED

CONNECTOR PIN FUNCTIONS

21101	D	91D0357	G
SCALE		SHEET 5.0	

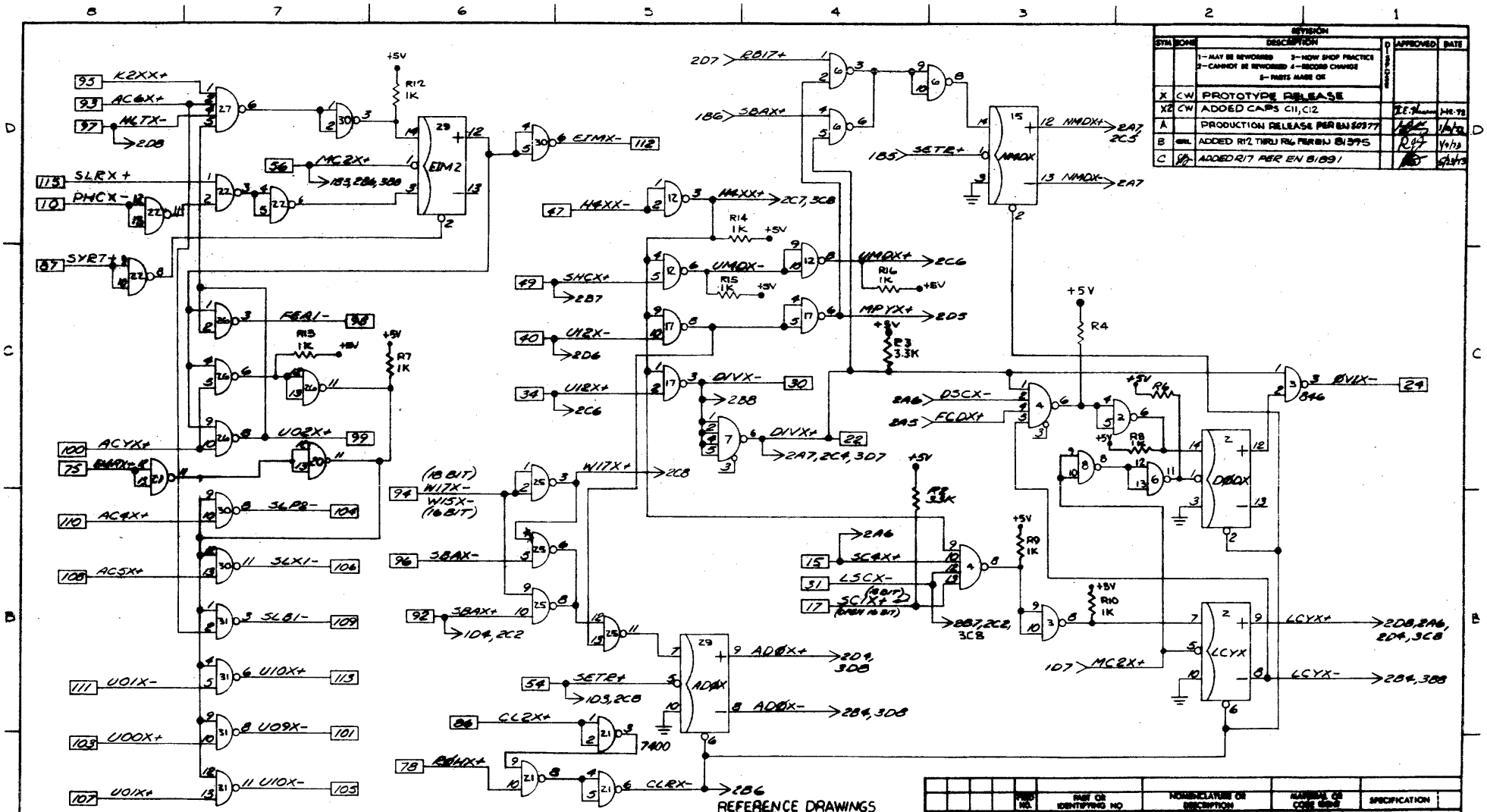

SYM	ZONE	DESCRIPTION	APPROVED	DATE
		1-MAY BE REWORKED 2-CANNOT BE REWORKED 3-NOW SHOP PRACTICE 4-RECORD CHANGE 5-PARTS MADE OK		
X	CW	PROTOTYPE RELEASE		
X2	CW	ADDED CAPS C11, C12		1-12-72
A		PRODUCTION RELEASE PER EN 50377		1/10/72
B		ADDED R12 THRU R16 PER EN 81395		1/9/73
C		ADDED R17 PER EN 81891		5/23/73

5. PWR DISTRIBUTION TO IC'S: 2 & 29 PIN 4 = +5V, PIN 11 = GND
4. PWR DISTRIBUTION TO IC: 16 PIN 5 = +5V, PIN 12 = GND
3. PWR DISTRIBUTION TO IC'S: PIN 14 = +5V, PIN 7 = GND EXCEPTIONS NOTE 4 AND 5.
2. ALL RESISTORS ARE 1.0K, 1/4W, ±5%
1. THE SYMBOLS XXX>— AND —>XXX INDICATE A SIGNAL SOURCE AND FLOW LOCATION CODE. THE FIRST DIGIT INDICATES SHEET NO., THE LETTER A HORIZONTAL ZONE AND THE SECOND DIGIT A VERTICAL ZONE.

NOTE: UNLESS OTHERWISE SPECIFIED

LAST REFERENCE DESIGNATION USED		
R17	C12	IC32
REFERENCE DESIGNATIONS NOT USED		
R5	A1	

REFERENCE DRAWINGS

ASSEMBLY 40D0594
BOARD DETAIL 40D0507

PHOTO MASTER 97D0700

SOLDER MASK 97D0701
SILKSCREEN 97D0702

QTY REQD PER ASSY	FIND NO.	PART OR IDENTIFYING NO	NOMENCLATURE OR DESCRIPTION	MATERIAL OR CODE IDENT	SPECIFICATION

LIST OF MATERIALS OR PARTS LIST

NEXT ASSY	REQ
44D0594	REF

DIMENSIONS ARE IN INCHES AND AFTER PLATING
TOLERANCES (UNLESS OTHERWISE SPECIFIED)
.X ± .1
.XX ± .03
.XXX ± .010
ANGLES ± 0.5°
ALL MACHINED SURFACES

DR C. WARNER 1-12-72
CHK 1-12-72
DSGN
ENGR 1-12-72
PROJ 1-12-72
REL
APPROVED
APPROVED
DO NOT SCALE DRAWING WORK TO DIMENSIONS SHOWN

varian data machines

LOGIC DIAGRAM
DM338
MULTIPLY DIVIDE & E.A.

CODE IDENT NO 21101 | SIZE D | 91D0358 | REV C

SCALE | SHEET 1 OF 3

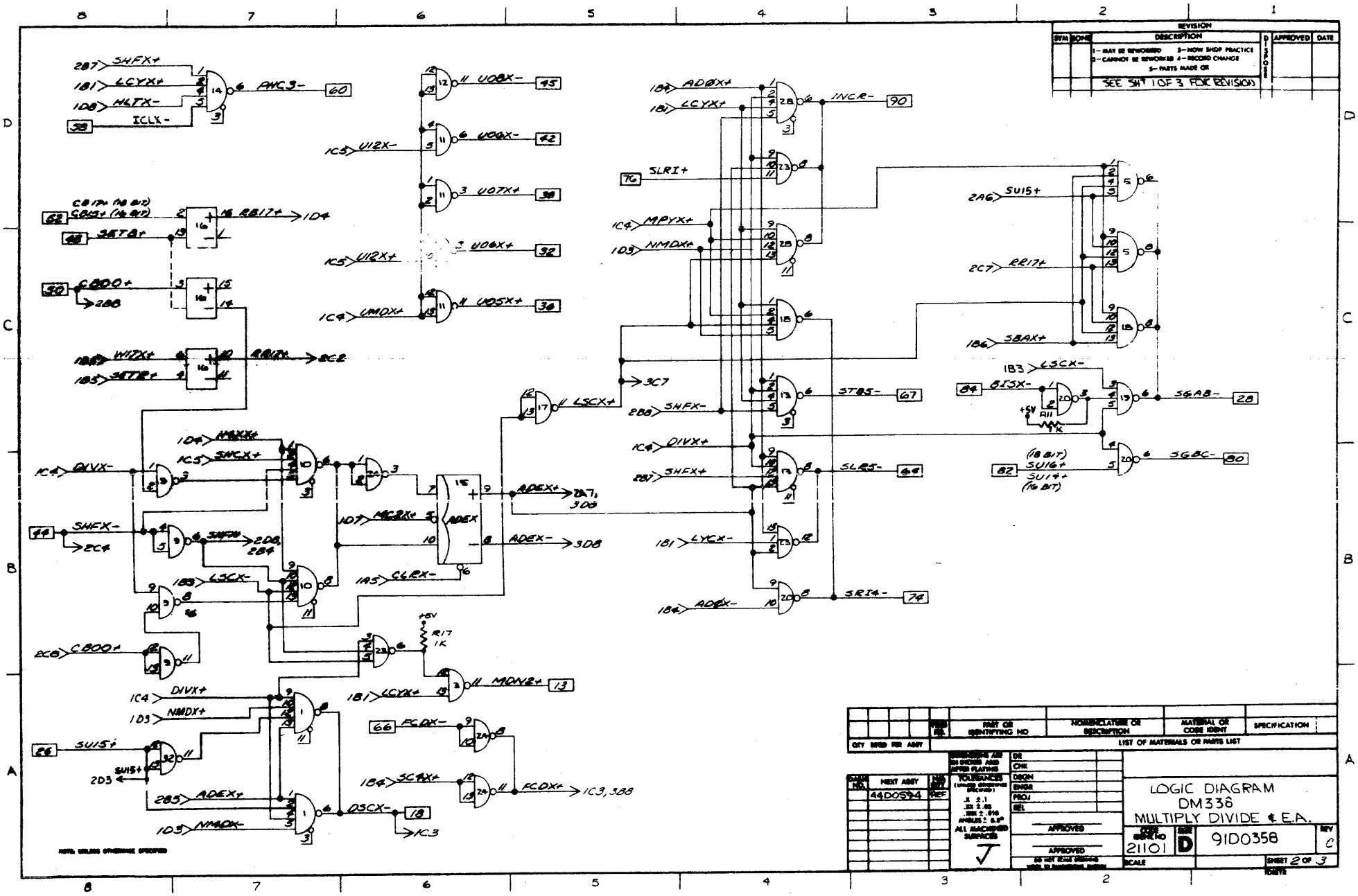

REVISION				
SYM	ZONE	DESCRIPTION	APPROVED	DATE
		1- MAY BE REWORKED 3- NOW SHOP PRACTICE 2- CANNOT BE REWORKED 4- RECORD CHANGE 5- PARTS MADE OR		
		SEE SHT 1 OF 3 FOR REVISIONS		

ITEM NO.	PART OR IDENTIFYING NO.	NOMENCLATURE OR DESCRIPTION	MATERIAL OR CODE IDENT	SPECIFICATION
QTY REQD PER ASSY		LIST OF MATERIALS OR PARTS LIST		

NEXT ASSY	44D0594	DR	LOGIC DIAGRAM DM33δ MULTIPLY DIVIDE & E.A.
USED ON	REF	CHK	
TOLERANCES		DESGN	
.X ± .1 .XX ± .05 .XXX ± .010 ANGLES ± 0.5° ALL MACHINED SURFACES		ENGR	
		PROJ	
		SEL	
APPROVED		CODE IDENT NO 21101	SIZE D — DWG NO 9ID0358 — REV C
APPROVED		SCALE	SHEET 2 OF 3

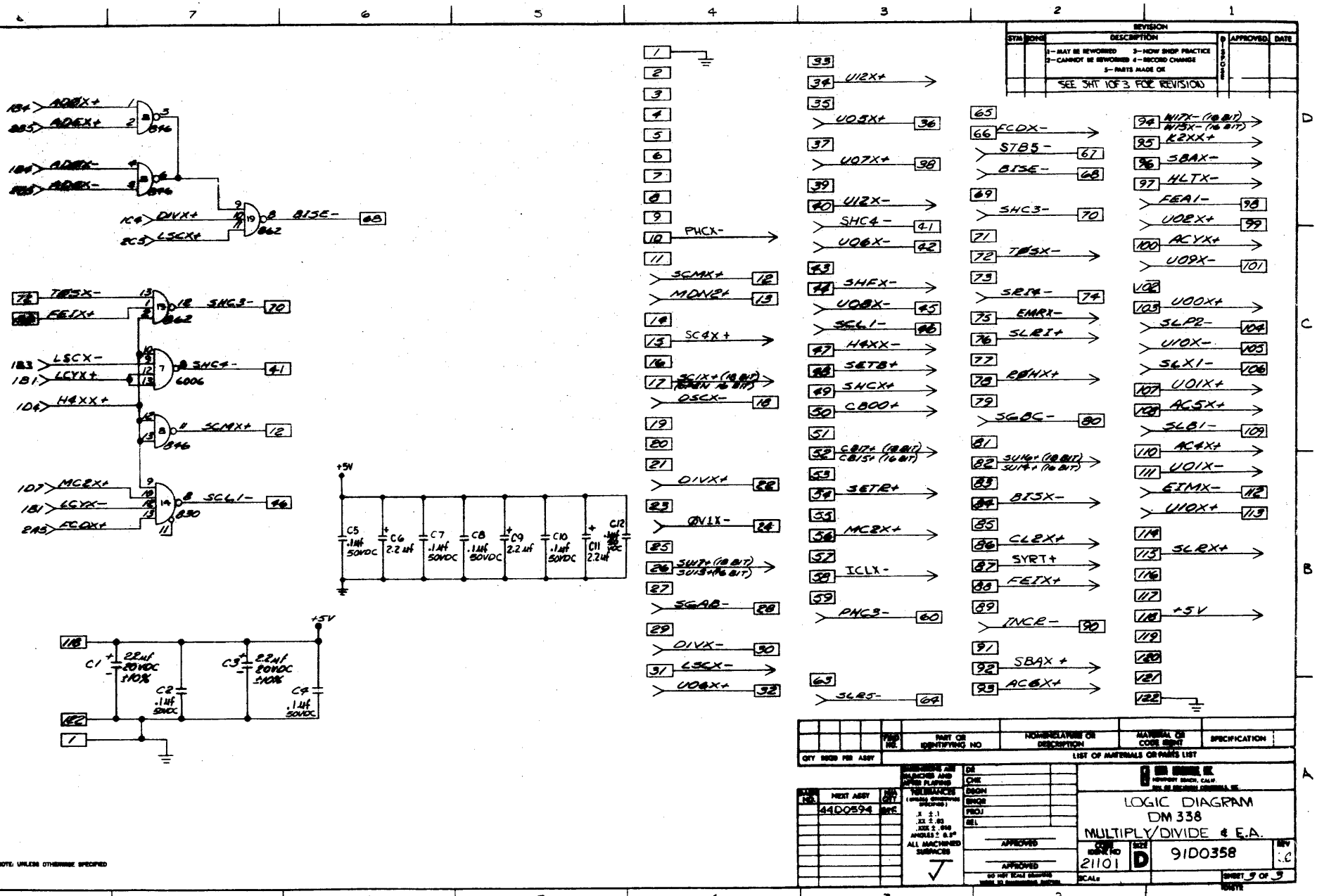

REVISION
SYM ZONE DESCRIPTION APPROVED DATE
1-MAY BE REWORKED 3-NOW SHOP PRACTICE
2-CANNOT BE REWORKED 4-RECORD CHANGE
5-PARTS MADE OK
SEE SHT 1 OF 3 FOR REVISION
ADØX+
ADEX+
ADØX-
ADEX-
DIVX+
LSCX+
BISE-
TØSX-
FEIX+
SHC3-
LSCX-
LCYX+
SHC4-
H4XX+
SCMX+
MC2X+
LCYX-
FCDX+
SCL1-
+5V
C5 .1uf 50VDC
C6 2.2uf
C7 .1uf 50VDC
C8 .1uf 50VDC
C9 2.2uf
C10 .1uf 50VDC
C11 2.2uf
C12
C1 22uf 20VDC ±10%
C2 .1uf 50VDC
C3 22uf 20VDC ±10%
C4 .1uf 50VDC
PHCX-
SCMX+
MDN2+
SC4X+
SC1X+ (18 BIT) (OPEN 16 BIT)
OSCX-
DIVX+
ØV1X-
SU17+ (18 BIT) SU15+ (16 BIT)
SGAB-
DIVX-
LSCX-
U06X+
U12X+
U05X+
U07X+
U12X-
SHC4-
U06X-
SHFX-
U08X-
SCL1-
H4XX-
SETB+
SHCX+
CB00+
CB17+ (18 BIT) CB15+ (16 BIT)
SETR+
MC2X+
ICLX-
PHC3-
SLR5-
FCDX-
STB5-
BISE-
SHC3-
TØSX-
SRI4-
EMRX-
SLRI+
RØHX+
SGBC-
SU16+ (18 BIT) SU14+ (16 BIT)
BISX-
CL2X+
SYRT+
FEIX+
INCR-
SBAX+
AC6X+
W17X- (18 BIT) W15X- (16 BIT)
K2XX+
SBAX-
HLTX-
FEA1-
U02X+
ACYX+
U09X-
U00X+
SLP2-
U10X-
SLX1-
U01X+
AC5X+
SLB1-
AC4X+
U01X-
EIMX-
U10X+
SLRX+
+5V
NOTE: UNLESS OTHERWISE SPECIFIED
QTY REQD PER ASSY
FIND NO.
PART OR IDENTIFYING NO
NOMENCLATURE OR DESCRIPTION
MATERIAL OR CODE IDENT
SPECIFICATION
LIST OF MATERIALS OR PARTS LIST
NEXT ASSY
44D0594
DR
CHK
DSGN
ENGR
PROJ
REL
APPROVED
APPROVED
DO NOT SCALE DRAWING
LOGIC DIAGRAM
DM 338
MULTIPLY/DIVIDE & E.A.
CODE IDENT NO 21101
SIZE D
91D0358
REV
SCALE
SHEET 3 OF 3

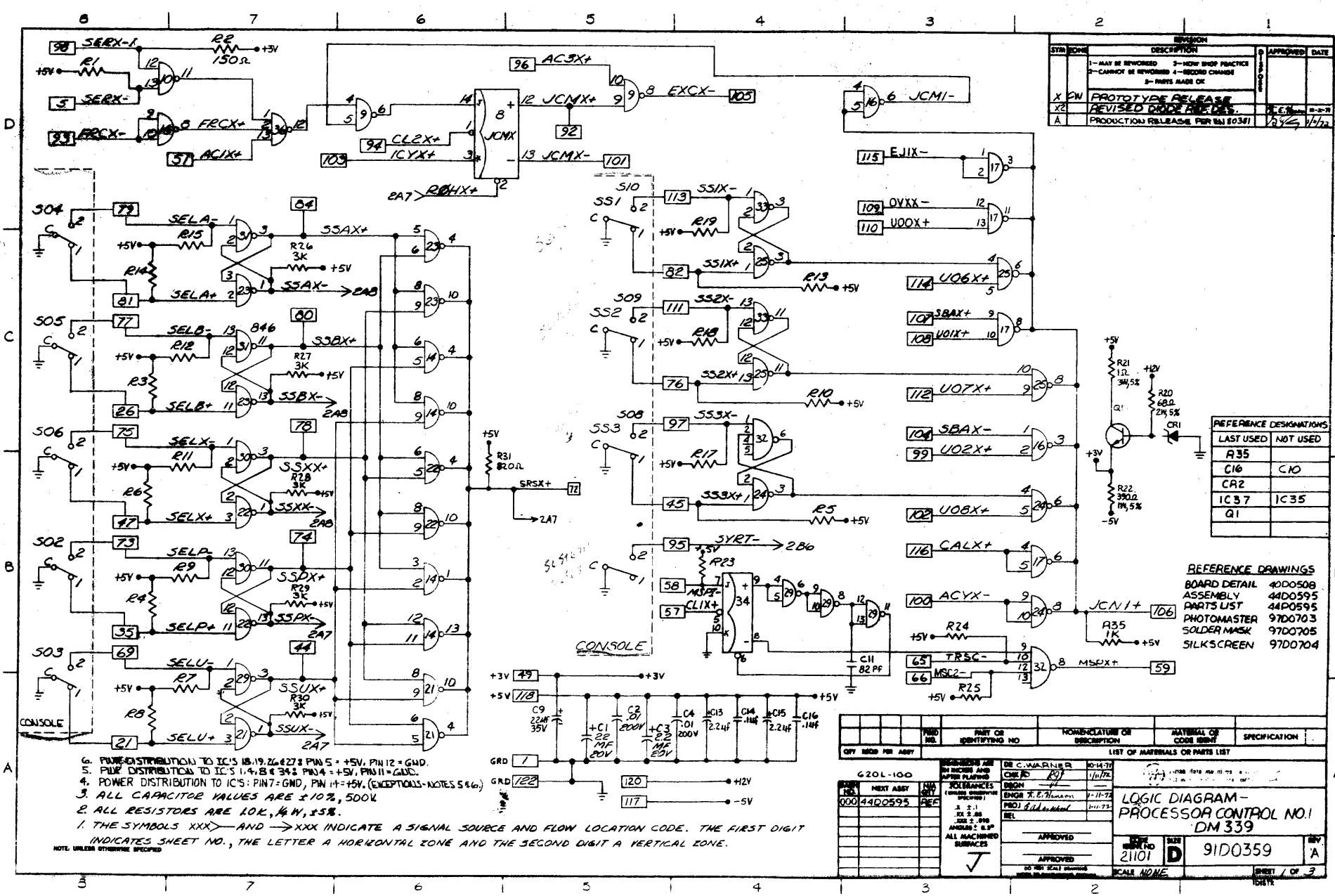

6. POWER DISTRIBUTION TO IC'S 18, 19, 26 & 27 ± PIN 5 = +5V, PIN 12 = GND.
5. PWR DISTRIBUTION TO IC'S 1, 4, 8 & 34 ± PIN 4 = +5V, PIN 11 = GND.
4. POWER DISTRIBUTION TO IC'S: PIN 7 = GND, PIN 14 = +5V. (EXCEPTIONS - NOTES 5 & 6.)
3. ALL CAPACITOR VALUES ARE ± 10%, 500V.
2. ALL RESISTORS ARE 10K, ¼ W, ±5%.
1. THE SYMBOLS XXX> AND >XXX INDICATE A SIGNAL SOURCE AND FLOW LOCATION CODE. THE FIRST DIGIT INDICATES SHEET NO., THE LETTER A HORIZONTAL ZONE AND THE SECOND DIGIT A VERTICAL ZONE.

NOTE: UNLESS OTHERWISE SPECIFIED

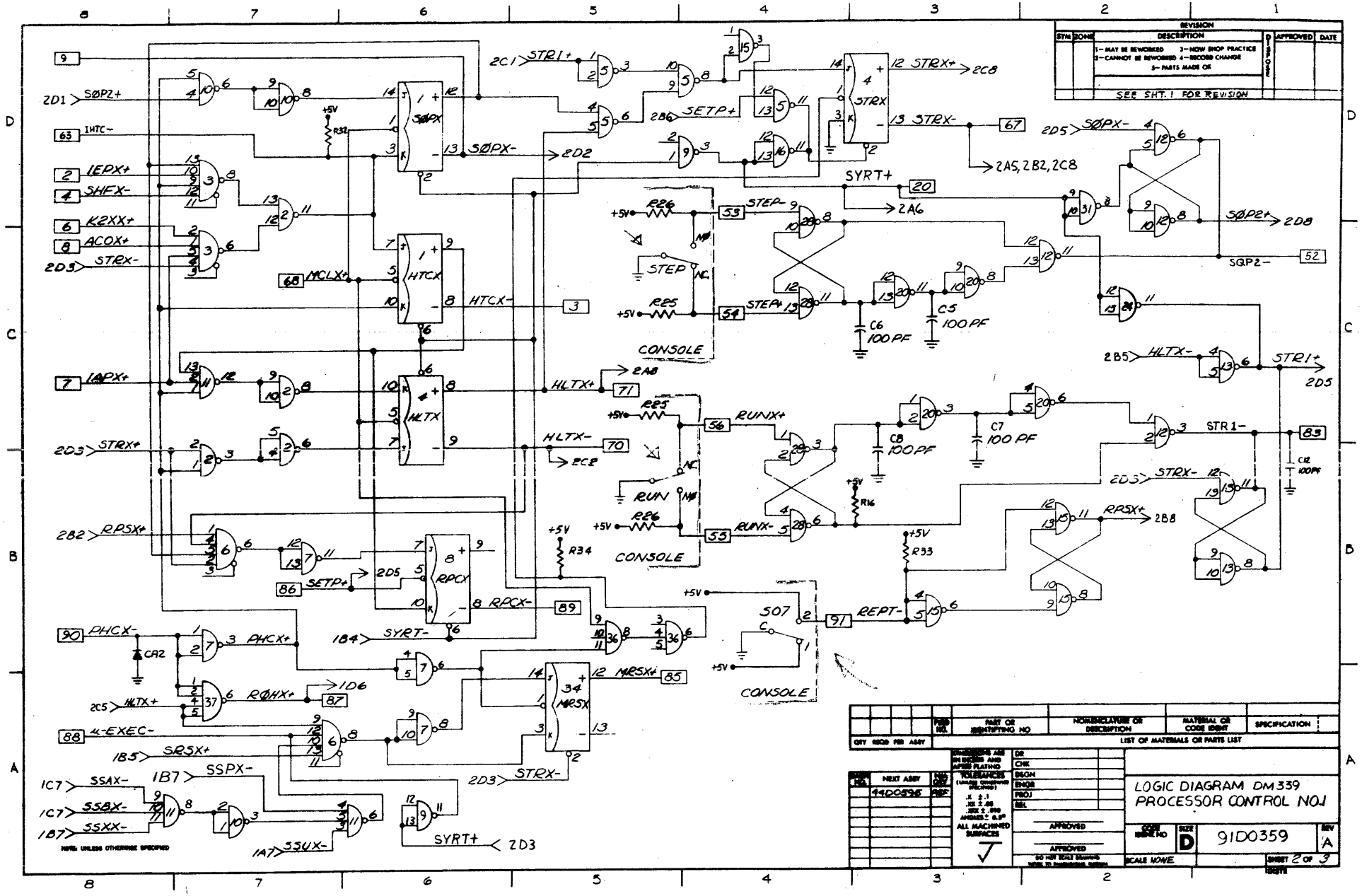
LOGIC DIAGRAM DM339
PROCESSOR CONTROL NO.1
9100359
SHEET 2 OF 3
SCALE NONE
SEE SHT. 1 FOR REVISION
CONSOLE
CONSOLE
CONSOLE
SØPX-
SØPZ+
SQPZ-
SETP+
SETP-
STEP+
RUNX+
RUNX-
HLTX+
HLTX-
HTCX-
RPCX-
PHCX-
MRSX+
SYRT+
SYRT-
STRX+
STRX-
STR1+
STR1-
RPSX+
RPSX-
REPT-
SSPX-
SSAX-
SSBX-
SSXX-
SSUX-
SRSX+
MCLX+
IHTC-
SHFX-
ACOX+
STEP
RUN
REPT
SØP2+
HLTX+
RØHX+
4-EXEC-
SYRT+
SYRT-
STRX+
STRX-

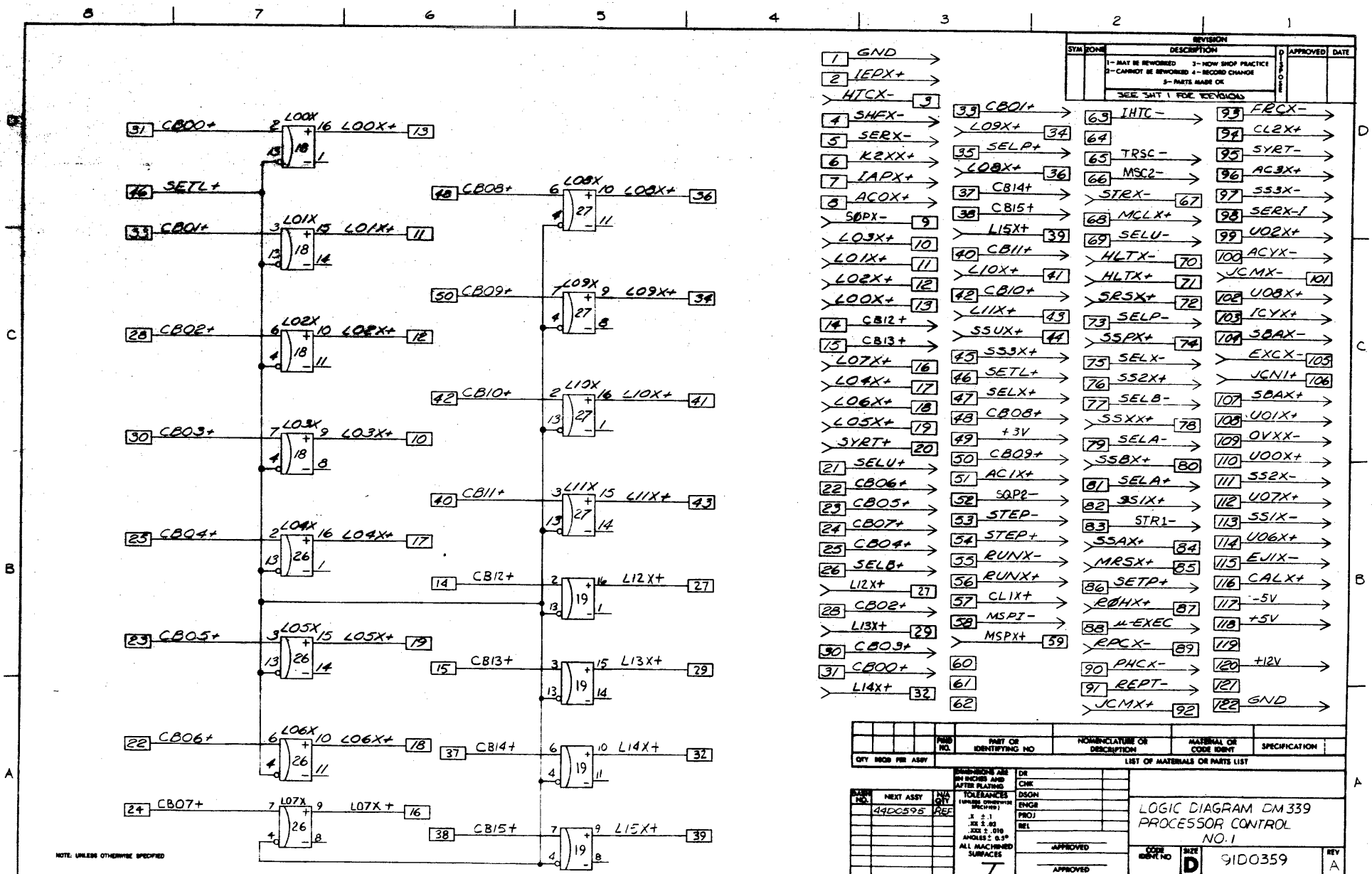
91 CB00+
L00X
L00X+ 13
SETL+ 46
33 CB01+
L01X
L01X+ 11
28 CB02+
L02X
L02X+ 12
30 CB03+
L03X
L03X+ 10
23 CB04+
L04X
L04X+ 17
23 CB05+
L05X
L05X+ 19
22 CB06+
L06X
L06X+ 18
24 CB07+
L07X
L07X+ 16
48 CB08+
L08X
L08X+ 36
50 CB09+
L09X
L09X+ 34
42 CB10+
L10X
L10X+ 41
40 CB11+
L11X
L11X+ 43
14 CB12+
L12X+ 27
15 CB13+
L13X+ 29
37 CB14+
L14X+ 32
38 CB15+
L15X+ 39
NOTE: UNLESS OTHERWISE SPECIFIED
1 GND
2 IEPX+
HTCX- 3
4 SHFX-
5 SERX-
6 K2XX+
7 IAPX+
8 ACOX+
SOPX- 9
L09X+ 10
L01X+ 11
L02X+ 12
L00X+ 13
14 CB12+
15 CB13+
L07X+ 16
L04X+ 17
L06X+ 18
L05X+ 19
SYRT+ 20
21 SELU+
22 CB06+
23 CB05+
24 CB07+
25 CB04+
26 SELB+
L12X+ 27
28 CB02+
L13X+ 29
30 CB03+
31 CB00+
L14X+ 32
33 CB01+
L09X+ 34
35 SELP+
L08X+ 36
37 CB14+
38 CB15+
L15X+ 39
40 CB11+
L10X+ 41
42 CB10+
L11X+ 43
SSUX+ 44
45 SS3X+
46 SETL+
47 SELX+
48 CB08+
49 +3V
50 CB09+
51 AC1X+
52 SQP2-
53 STEP-
54 STEP+
55 RUNX-
56 RUNX+
57 CL1X+
58 MSPI-
MSPX+ 59
60
61
62
63 IHTC-
64
65 TRSC-
66 MSC2-
STRX- 67
68 MCLX+
69 SELU-
HLTX- 70
HLTX+ 71
SRSX+ 72
73 SELP-
SSPX+ 74
75 SELX-
76 SS2X+
77 SELB-
SSXX+ 78
79 SELA-
SSBX+ 80
81 SELA+
82 3S1X+
83 STR1-
SSAX+ 84
MRSX+ 85
86 SETP+
RØHX+ 87
88 μ-EXEC
RPCX- 89
90 PHCX-
91 REPT-
JCMX+ 92
93 FRCX-
94 CL2X+
95 SYRT-
96 AC3X+
97 SS3X-
98 SERX-1
99 U02X+
100 ACYX-
JCMX- 101
102 U08X+
103 ICYX+
104 SBAX-
EXCX- 105
JCN1+ 106
107 SBAX+
108 U01X+
109 OVXX-
110 U00X+
111 SS2X-
112 U07X+
113 SS1X-
114 U06X+
115 EJ1X-
116 CALX+
117 -5V
118 +5V
119
120 +12V
121
122 GND
REVISION
SYM ZONE DESCRIPTION APPROVED DATE
1- MAY BE REWORKED 3- NEW SHOP PRACTICE
2- CANNOT BE REWORKED 4- RECORD CHANGE
5- PARTS MADE OK
SEE SHT 1 FOR REVISIONS
ITEM NO | PART NO | PART OR IDENTIFYING NO | NOMENCLATURE OR DESCRIPTION | MATERIAL OR CODE IDENT | SPECIFICATION
QTY REQD PER ASSY
LIST OF MATERIALS OR PARTS LIST
DIMENSIONS ARE IN INCHES AND AFTER PLATING
TOLERANCES (UNLESS OTHERWISE SPECIFIED)
.X ±.1
.XX ±.02
.XXX ±.010
ANGLES ± 0.5°
ALL MACHINED SURFACES
DR
CHK
DSGN
ENGR
PROJ
REL
APPROVED
APPROVED
DO NOT SCALE DRAWING
WORK TO DIMENSIONS ONLY
USED ON NEXT ASSY 4400595 N/A QTY REF
LOGIC DIAGRAM DM339
PROCESSOR CONTROL
NO. 1
CODE IDENT NO
SIZE D
91D0359
REV A
SCALE NONE
SHEET 3 OF 3
TOLTT

CAUTION: EN 82844
AFFECTS THIS DWG.

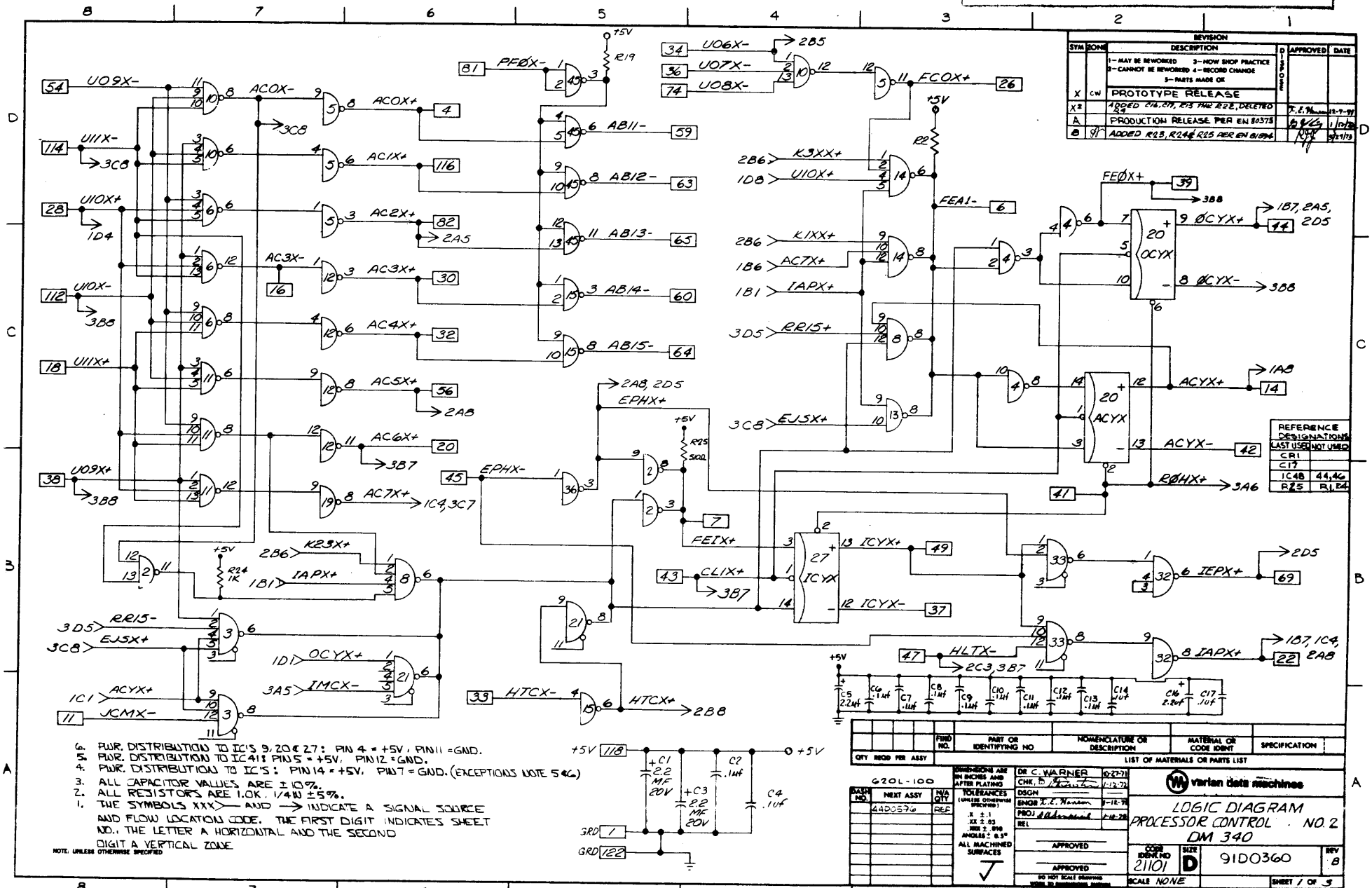

REVISION					
SYM	ZONE	DESCRIPTION (1–MAY BE REWORKED 2–CANNOT BE REWORKED 3–NOW SHOP PRACTICE 4–RECORD CHANGE 5–PARTS MADE OR)	ECO	APPROVED	DATE
X	CW	PROTOTYPE RELEASE			
X²		ADDED C16,C17, R23 THRU R28, DELETED		T.E.W.	12-7-71
A		PRODUCTION RELEASE PER EN 80375			1/10/72
B		ADDED R23, R24 & R25 PER EN 81894			9/24/73

REFERENCE DESIGNATIONS	
LAST USED	NOT USED
CR1	
C17	
IC48	44,46
R25	R1,R4

1. THE SYMBOLS XXX> AND —> INDICATE A SIGNAL SOURCE AND FLOW LOCATION CODE. THE FIRST DIGIT INDICATES SHEET NO., THE LETTER A HORIZONTAL AND THE SECOND DIGIT A VERTICAL CODE.
2. ALL RESISTORS ARE 1.0K, 1/4W ±5%.
3. ALL CAPACITOR VALUES ARE ±10%.
4. PWR. DISTRIBUTION TO IC'S: PIN 14 = +5V, PIN 7 = GND. (EXCEPTIONS NOTE 5 & 6)
5. PWR. DISTRIBUTION TO IC 41: PIN 5 = +5V, PIN 12 = GND.
6. PWR. DISTRIBUTION TO IC'S 9, 20 & 27: PIN 4 = +5V, PIN 11 = GND.

NOTE: UNLESS OTHERWISE SPECIFIED

QTY REQD PER ASSY	FIND NO.	PART OR IDENTIFYING NO	NOMENCLATURE OR DESCRIPTION	MATERIAL OR CODE IDENT	SPECIFICATION

LIST OF MATERIALS OR PARTS LIST

DASH NO.	NEXT ASSY	NVA QTY
	4400576	REF

620L-100

DIMENSIONS ARE IN INCHES AND AFTER PLATING
TOLERANCES (UNLESS OTHERWISE SPECIFIED)
.X ±.1
.XX ±.03
.XXX ±.010
ANGLES ± 0.5°
ALL MACHINED SURFACES

DR	C. WARNER	10-27-71
CHK		1-12-72
DSGN		
ENGR	T. E. Warner	9-12-72
PROJ		1-10-72
REL		
APPROVED		
APPROVED		

DO NOT SCALE DRAWING

varian data machines

LOGIC DIAGRAM
PROCESSOR CONTROL . NO. 2
DM 340

CODE IDENT NO	SIZE	DWG NO	REV
21101	D	91D0360	B

SCALE NONE

SHEET 1 OF 3

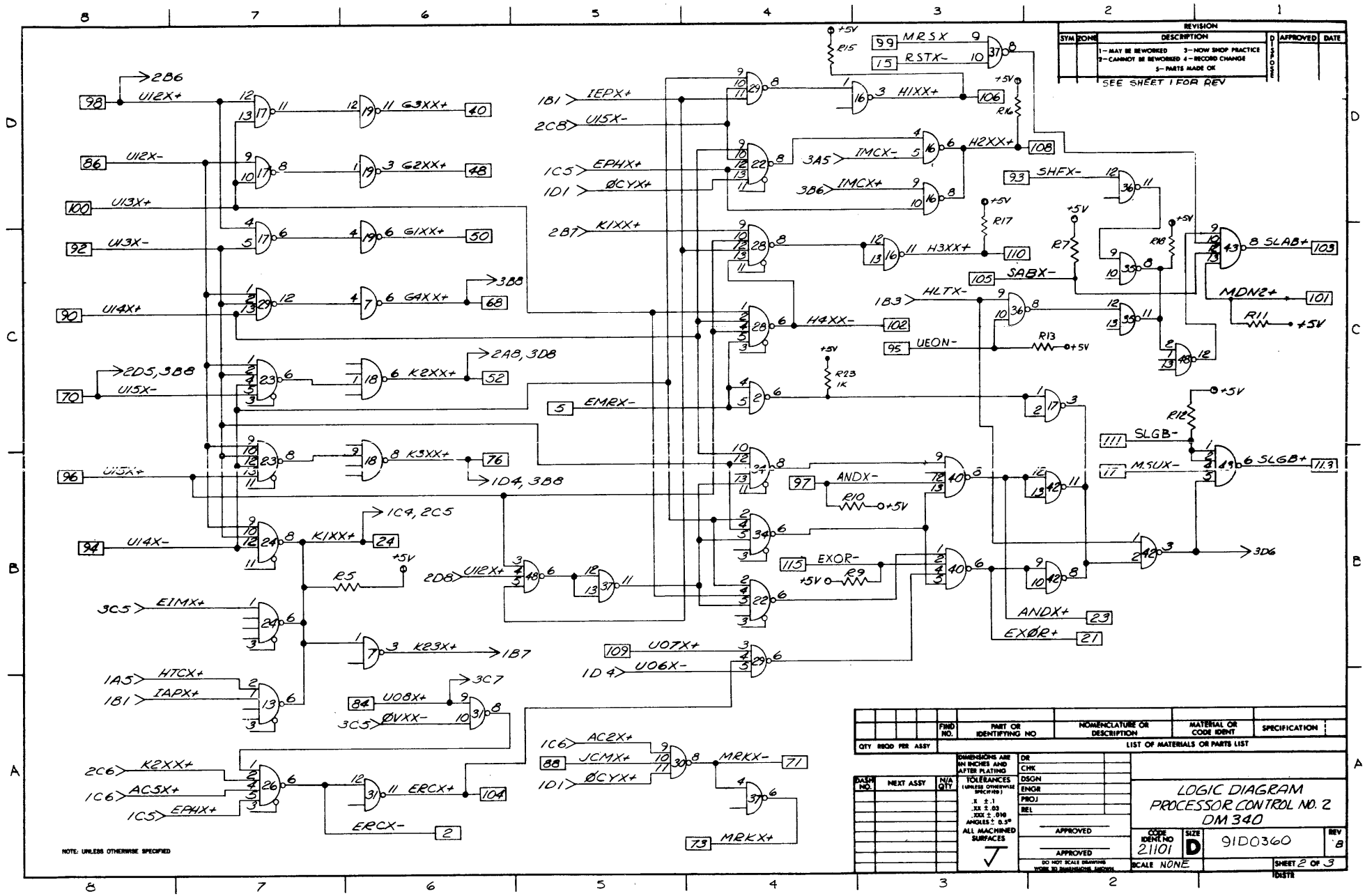

REVISION
SYM ZONE DESCRIPTION DISPOSE APPROVED DATE
1 - MAY BE REWORKED 3 - NOW SHOP PRACTICE
2 - CANNOT BE REWORKED 4 - RECORD CHANGE
5 - PARTS MADE OK
SEE SHEET 1 FOR REV
NOTE: UNLESS OTHERWISE SPECIFIED
FIND NO. PART OR IDENTIFYING NO NOMENCLATURE OR DESCRIPTION MATERIAL OR CODE IDENT SPECIFICATION
QTY REQD PER ASSY
LIST OF MATERIALS OR PARTS LIST
DIMENSIONS ARE IN INCHES AND AFTER PLATING
TOLERANCES (UNLESS OTHERWISE SPECIFIED)
.X ± .1
.XX ± .03
.XXX ± .010
ANGLES ± 0.5°
ALL MACHINED SURFACES
DR
CHK
DSGN
ENGR
PROJ
REL
APPROVED
APPROVED
DO NOT SCALE DRAWING
WORK TO DIMENSIONS SHOWN
DASH NO. NEXT ASSY N/A QTY
LOGIC DIAGRAM
PROCESSOR CONTROL NO. 2
DM 340
CODE IDENT NO 21101
SIZE D
91D0360
REV B
SCALE NONE
SHEET 2 OF 3
DISTR

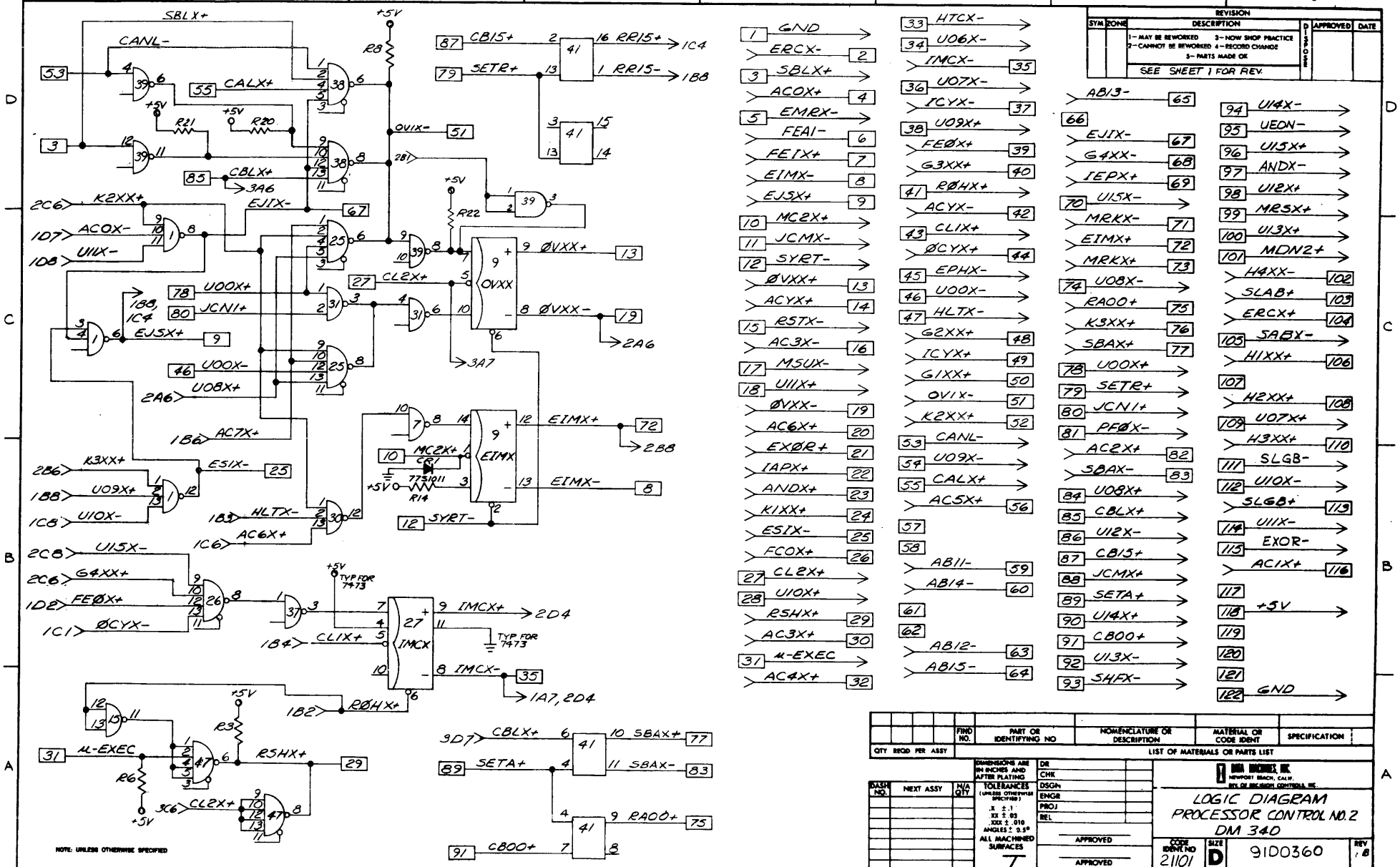

REVISION
SYM ZONE DESCRIPTION DISPOSE APPROVED DATE
1-MAY BE REWORKED 3-NOW SHOP PRACTICE
2-CANNOT BE REWORKED 4-RECORD CHANGE
5-PARTS MADE OK
SEE SHEET 1 FOR REV.
GND
ERCX-
SBLX+
ACOX+
EMRX-
FEA1-
FEIX+
EIMX-
EJSX+
MC2X+
JCMX-
SYRT-
ØVXX+
ACYX+
RSTX-
AC3X-
MSUX-
U11X+
ØVXX-
AC6X+
EXØR+
IAPX+
ANDX+
K1XX+
ESIX-
FCOX+
CL2X+
U10X+
RSHX+
AC3X+
μ-EXEC
AC4X+
HTCX-
U06X-
IMCX-
U07X-
ICYX-
U09X+
FEØX+
G3XX+
RØHX+
ACYX-
CL1X+
ØCYX+
EPHX-
U00X-
HLTX-
G2XX+
ICYX+
G1XX+
OV1X-
K2XX+
CANL-
U09X-
CALX+
AC5X+
AB11-
AB14-
AB12-
AB15-
AB13-
EJIX-
G4XX-
IEPX+
U15X-
MRKX-
EIMX+
MRKX+
U08X-
RA00+
K3XX+
SBAX+
U00X+
SETR+
JCN1+
PFØX-
AC2X+
SBAX-
U08X+
CBLX+
U12X-
CB15+
JCMX+
SETA+
U14X+
CB00+
U13X-
SHFX-
U14X-
UEON-
U15X+
ANDX-
U12X+
MRSX+
U13X+
MDN2+
H4XX-
SLAB+
ERCX+
SABX-
H1XX+
H2XX+
U07X+
H3XX+
SLGB-
U10X-
SLGB+
U11X-
EXOR-
AC1X+
+5V
GND
SBLX+
CANL-
CALX+
CBLX+
K2XX+
ACOX-
U11X-
EJIX-
U00X+
JCN1+
EJSX+
U00X-
U08X+
AC7X+
K3XX+
U09X+
U10X-
ES1X-
HLTX-
AC6X+
U15X-
G4XX+
FEØX+
ØCYX-
CL1X+
RØHX+
μ-EXEC
RSHX+
CL2X+
CB15+
SETR+
RR15+
RR15-
OV1X-
CL2X+
ØVXX+
ØVXX-
EIMX+
EIMX-
SYRT-
IMCX+
IMCX-
CBLX+
SETA+
SBAX+
SBAX-
RA00+
CB00+
TYP FOR 7473
NOTE: UNLESS OTHERWISE SPECIFIED
QTY REQD PER ASSY
FIND NO.
PART OR IDENTIFYING NO
NOMENCLATURE OR DESCRIPTION
MATERIAL OR CODE IDENT
SPECIFICATION
LIST OF MATERIALS OR PARTS LIST
DASH NO.
NEXT ASSY
N/A QTY
DIMENSIONS ARE IN INCHES AND AFTER PLATING
TOLERANCES (UNLESS OTHERWISE SPECIFIED)
.X ± .1
.XX ± .03
.XXX ± .010
ANGLES ± 0.5°
ALL MACHINED SURFACES
DR
CHK
DSGN
ENGR
PROJ
REL
APPROVED
APPROVED
DO NOT SCALE DRAWING
DATA MACHINES, INC.
NEWPORT BEACH, CALIF.
DIV. OF DECISION CONTROLS, INC.
LOGIC DIAGRAM
PROCESSOR CONTROL NO. 2
DM 340
CODE IDENT NO 21101
SIZE D
91D0360
REV B
SCALE
SHEET 3 OF 3

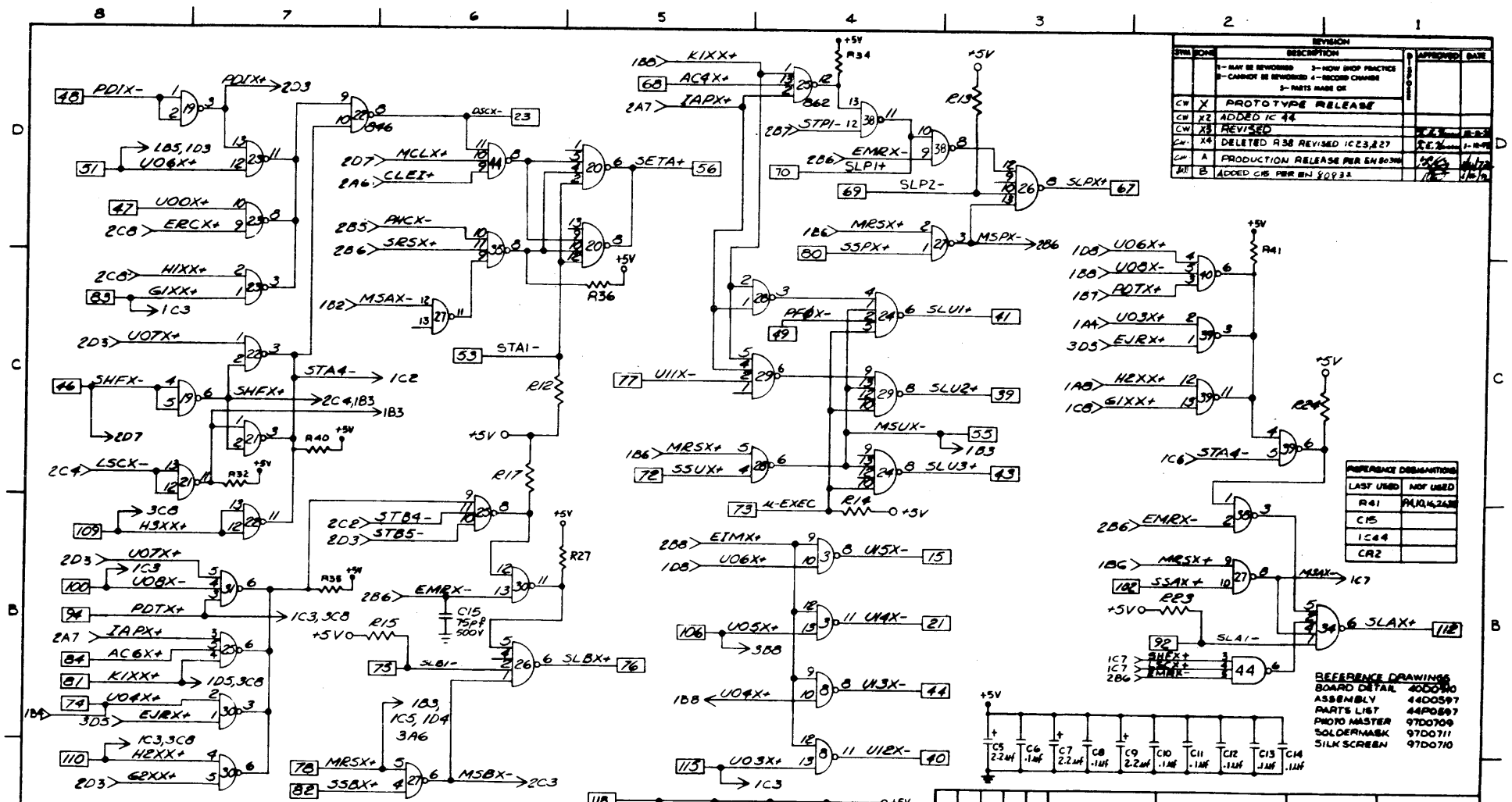

REVISION					
SYM	ZONE	DESCRIPTION		APPROVED	DATE
		1- MAY BE REWORKED 3- NOW SHOP PRACTICE 2- CANNOT BE REWORKED 4- RECORD CHANGE 5- PARTS MADE OK			
CW	X	PROTOTYPE RELEASE			
CW	X2	ADDED IC 44			
CW	X3	REVISED			
CW	X4	DELETED R38 REVISED IC23,227			
CW	A	PRODUCTION RELEASE PER EN 80316			
	B	ADDED C15 PER EN 80932			

REFERENCE DESIGNATIONS	
LAST USED	NOT USED
R41	R4,10,16,26,38
C15	
IC44	
CR2	

REFERENCE DRAWINGS

BOARD DETAIL	40D0510
ASSEMBLY	44D0597
PARTS LIST	44P0597
PHOTO MASTER	97D0709
SOLDERMASK	97D0711
SILK SCREEN	97D0710

5. POWER DISTRIBUTION TO IC 2 & 12 : PIN 4 = +5V. PIN 11 = GND.
4. POWER DISTRIBUTION TO IC'S: PIN 7 = GRD PIN 14 = +5V (EXCEPTIONS NOTE 5)
3. ALL CAPACITOR VALUES ARE ±10%.
2. ALL RESISTORS ARE 1.0K, ¼W, ±5%.
1. THE SYMBOLS XXX>— AND —>XXX INDICATE A SIGNAL SOURCE AND FLOW LOCATION CODE. THE FIRST DIGIT INDICATES SHEET NO., THE LETTER A HORIZONTAL ZONE AND THE SECOND DIGIT A VERTICAL ZONE.

NOTE: UNLESS OTHERWISE SPECIFIED

QTY REQD PER ASSY	FIND NO.	PART OR IDENTIFYING NO	NOMENCLATURE OR DESCRIPTION	MATERIAL OR CODE IDENT	SPECIFICATION

LIST OF MATERIALS OR PARTS LIST

G20L-100

DASH NO.	NEXT ASSY	NO. QTY
-	44D0597	REF

DIMENSIONS ARE IN INCHES AND AFTER PLATING

TOLERANCES (UNLESS OTHERWISE SPECIFIED)
.X ± .1
.XX ± .03
.XXX ± .010
ANGLES ± 0.5°
ALL MACHINED SURFACES

DR C. WARNER 10-26-72
CHK 1-12-72
DSGN
ENGR 1-12-72
PROJ 1-12-72
REL
APPROVED
APPROVED

LOGIC DIAGRAM-
PROCESSOR CONTROL NO.3
DM341

CODE IDENT NO 21101 | SIZE D | 91D0361 | REV

SCALE NONE | SHEET 1 OF 3

B

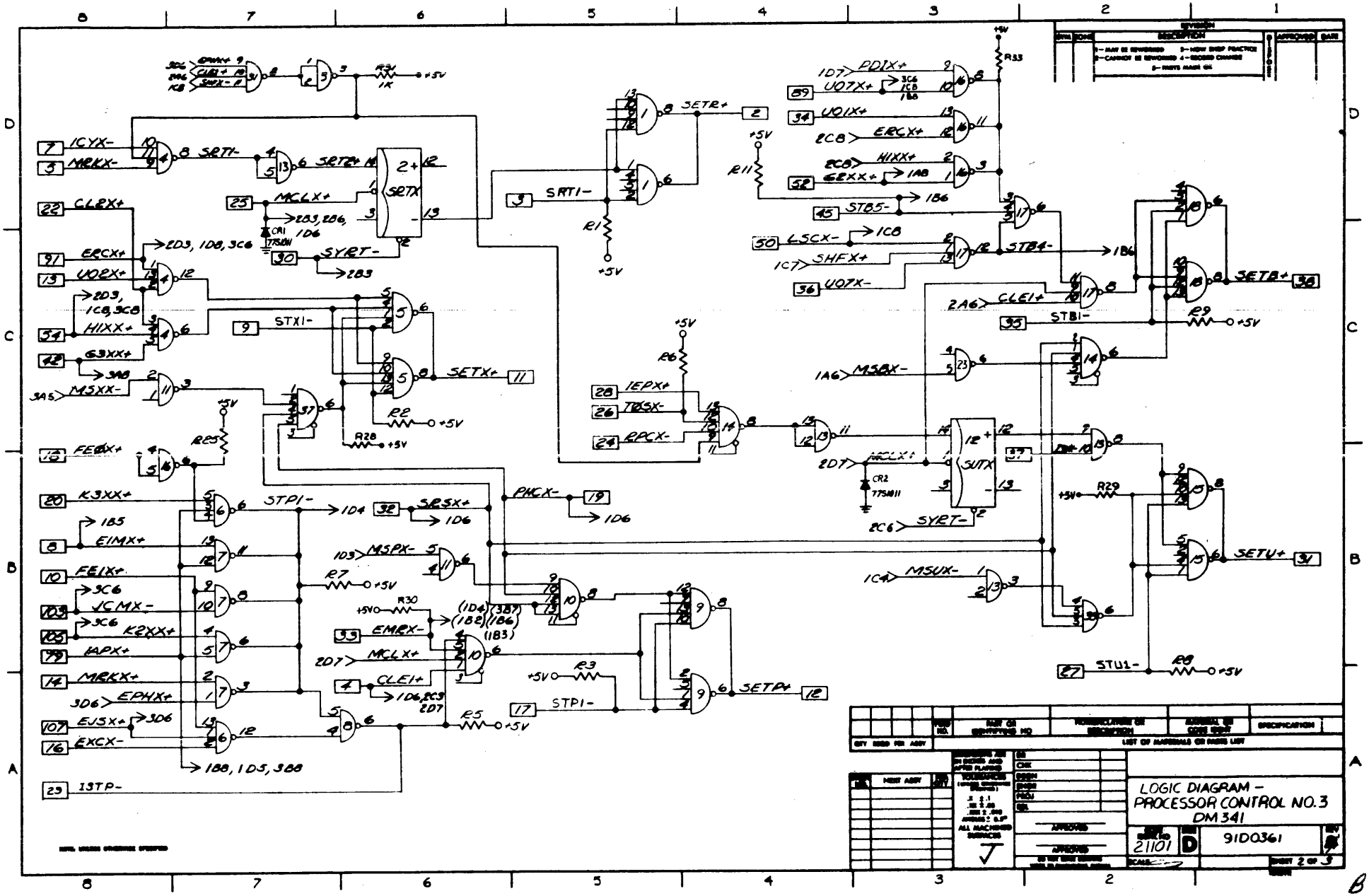
LOGIC DIAGRAM -
PROCESSOR CONTROL NO.3
DM 341
21101
D
91D0361
SHEET 2 OF 3
SRTX
SUTX
SETR+
SETX+
SETB+
SETU+
SETP+
SRT1-
SRT2+
SYRT-
STX1-
STP1-
STB1-
STB4-
STB5-
STU1-
MSBX-
MSUX-
MSPX-
MSXX-
MCLX+
CLE1+
EMRX-
PHCX-
SRSX+
ICYX-
MRKX-
CL2X+
ERCX+
UO2X+
HIXX+
G3XX+
FEØX+
K3XX+
EIMX+
FEIX+
JCMX-
K2XX+
IAPX+
MRKX+
EPHX+
EJSX+
EXCX-
ISTP-
IEPX+
TØSX-
RPCX-
PDIX+
UO7X+
UO1X+
HIXX+
G2XX+
LSCX-
SHFX+
UO7X-
CR1
CR2
R1
R2
R3
R5
R6
R7
R8
R9
R11
R25
R28
R29
R30
R31
R33
+5V

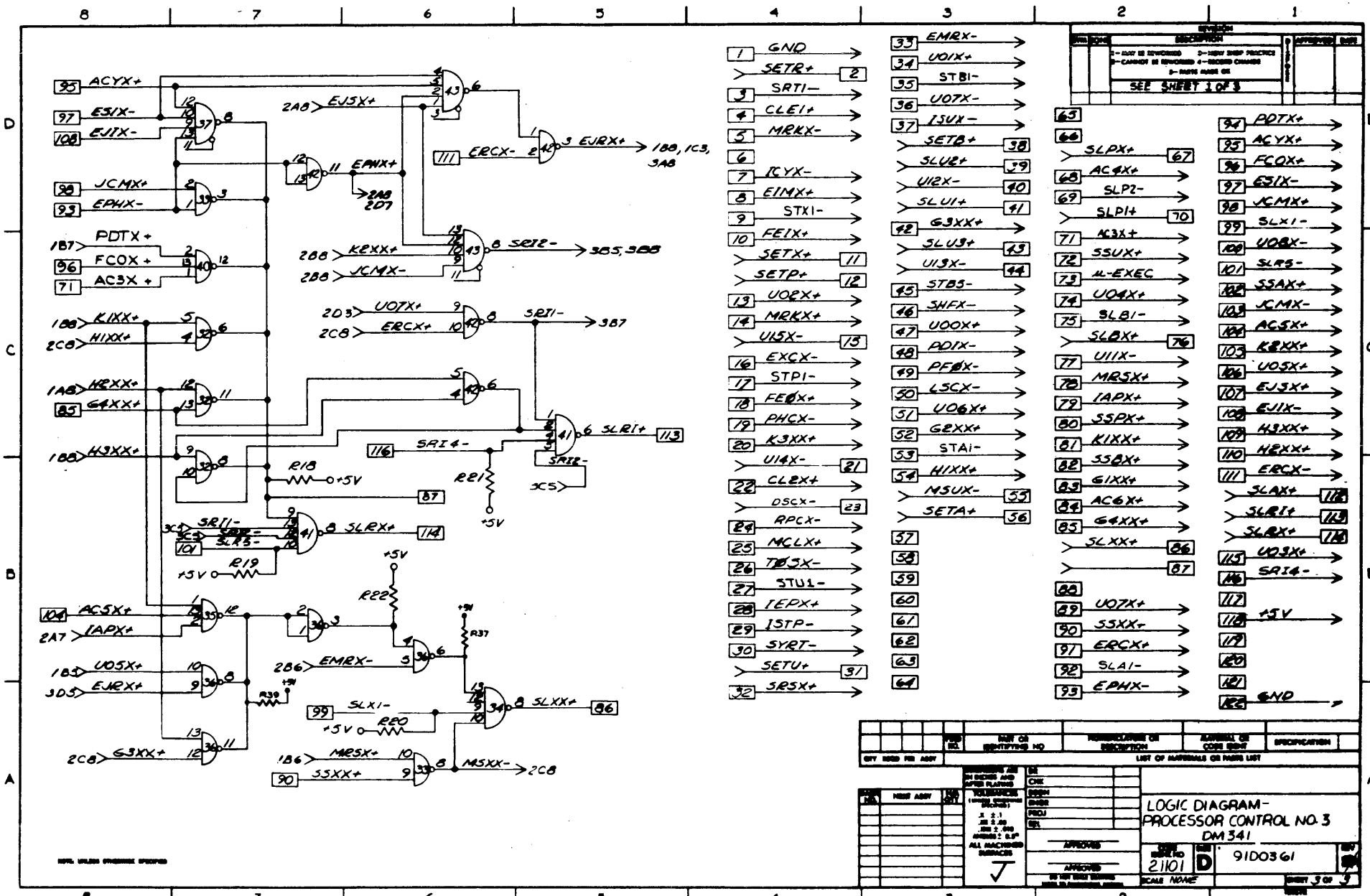

SEE SHEET 1 OF 3
LOGIC DIAGRAM-
PROCESSOR CONTROL NO. 3
DM341
21101
D
91D0361
SCALE NONE
SHEET 3 OF 3

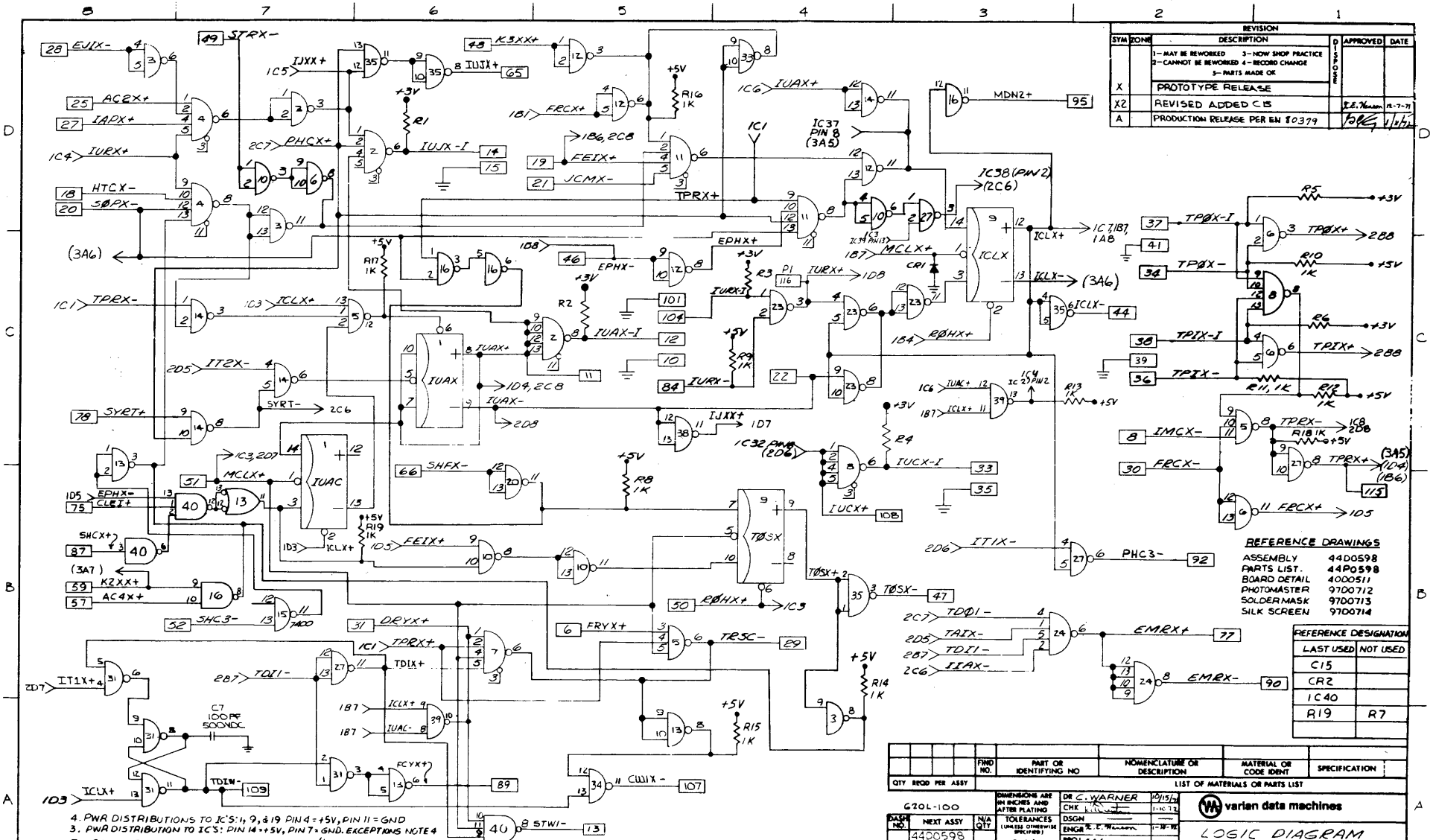

4. PWR DISTRIBUTIONS TO IC'S: 1, 9, & 19 PIN 4 = +5V, PIN 11 = GND
3. PWR DISTRIBUTION TO IC'S: PIN 14 = +5V, PIN 7 = GND. EXCEPTIONS NOTE 4
2. ALL RESISTORS ARE 150Ω, 1/4 W, ±5%.
1. THE SYMBOLS XXX> AND →XXX INDICATE A SIGNAL SOURCE AND FLOW LOCATION CODE. THE FIRST DIGIT INDICATES SHEET NO., THE LETTER A HORIZONTAL ZONE AND THE SECOND DIGIT A VERTICAL ZONE.

NOTE: UNLESS OTHERWISE SPECIFIED

REVISION					
SYM	ZONE	DESCRIPTION (1—MAY BE REWORKED 2—CANNOT BE REWORKED 3—NOW SHOP PRACTICE 4—RECORD CHANGE 5—PARTS MADE OK)	DISPOSE	APPROVED	DATE
X		PROTOTYPE RELEASE			
X2		REVISED ADDED C15		R.E. Warner	12-7-71
A		PRODUCTION RELEASE PER EN 80379		[illegible]	1/11/72

REFERENCE DRAWINGS

ASSEMBLY	44D0598
PARTS LIST.	44P0598
BOARD DETAIL	4000511
PHOTOMASTER	9700712
SOLDERMASK	9700713
SILK SCREEN	9700714

REFERENCE DESIGNATION	
LAST USED	NOT USED
C15	
CR2	
IC40	
R19	R7

QTY REQD PER ASSY	FIND NO.	PART OR IDENTIFYING NO	NOMENCLATURE OR DESCRIPTION	MATERIAL OR CODE IDENT	SPECIFICATION

LIST OF MATERIALS OR PARTS LIST

620L-100

DASH NO.	NEXT ASSY	N/A QTY
	4400598	

DIMENSIONS ARE IN INCHES AND AFTER PLATING

TOLERANCES (UNLESS OTHERWISE SPECIFIED) .X ± .1 .XX ± .03 .XXX ± .010 ANGLES ± 0.5° ALL MACHINED SURFACES

DR	C. WARNER	10/15/71
CHK	[illegible]	1-10-72
DSGN		
ENGR	R. E. Warner	1-10-72
PROJ	[illegible]	1-11-72
REL		

APPROVED

APPROVED

DO NOT CALE DRAWING WORK TO DIMENSIONS SHOWN

varian data machines

LOGIC DIAGRAM INTERRUPT TRAP DM 342

CODE IDENT NO	SIZE		REV
21101	D	91D0362	A

SCALE

SHEET 1 OF 3

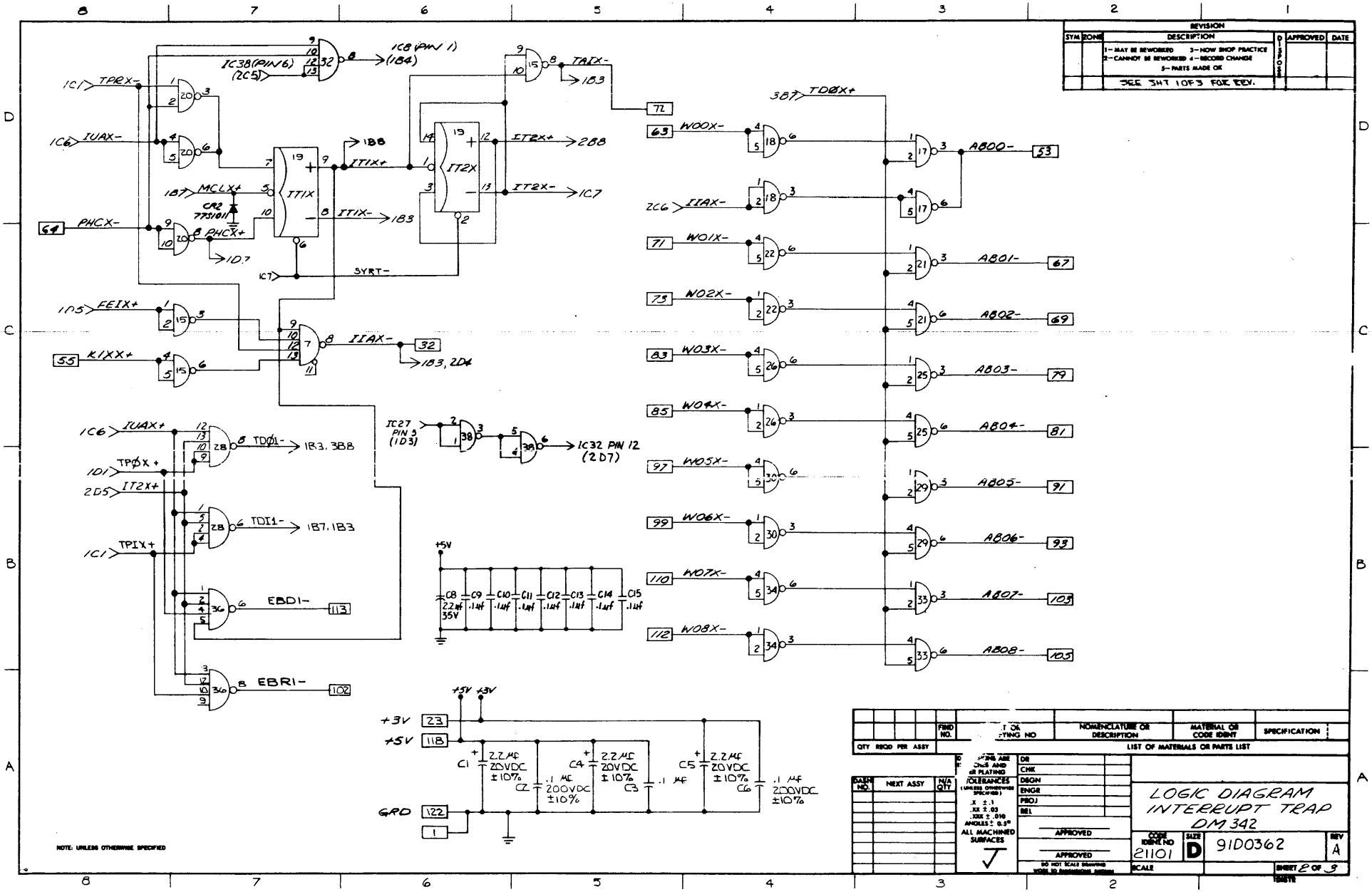

REVISION
SYM ZONE DESCRIPTION DISPOSE APPROVED DATE
1-MAY BE REWORKED 3-NOW SHOP PRACTICE
2-CANNOT BE REWORKED 4-RECORD CHANGE
5-PARTS MADE OK
SEE SHT 1 OF 3 FOR REV.
IC38(PIN6) (2C5)
IC8 (PIN 1) (1B4)
TAIX-
1B3
TPRX-
IUAX-
MCLX+
CR2 77S1011
PHCX-
PHCX+
1D7
IT1X
IT1X+
IT1X-
1B8
IT2X
IT2X+
2B8
IT2X-
1C7
SYRT-
FEIX+
K1XX+
IIAX-
1B3, 2D4
IC27 PIN 3 (1D3)
IC32 PIN 12 (2D7)
TDØ1-
1B3, 3B8
TPØX+
IT2X+
TDI1-
1B7, 1B3
TPIX+
EBD1-
EBR1-
TDØX+
W00X-
IIAX-
W01X-
W02X-
W03X-
W04X-
W05X-
W06X-
W07X-
W08X-
AB00-
AB01-
AB02-
AB03-
AB04-
AB05-
AB06-
AB07-
AB08-
+5V
C8 2.2µf 35V
C9 .1µf
C10 .1µf
C11 .1µf
C12 .1µf
C13 .1µf
C14 .1µf
C15 .1µf
+3V
+5V
GRD
C1 2.2µf 20VDC ±10%
C2 .1µf 200VDC ±10%
C4 2.2µf 20VDC ±10%
C3 .1µf
C5 2.2µf 20VDC ±10%
C6 .1µf 200VDC ±10%
NOTE: UNLESS OTHERWISE SPECIFIED
FIND NO.
NOMENCLATURE OR DESCRIPTION
MATERIAL OR CODE IDENT
SPECIFICATION
QTY REQD PER ASSY
LIST OF MATERIALS OR PARTS LIST
DASH NO.
NEXT ASSY
N/A QTY
TOLERANCES (UNLESS OTHERWISE SPECIFIED)
.X ±.1
.XX ±.03
.XXX ±.010
ANGLES ± 0.5°
ALL MACHINED SURFACES
DR
CHK
DSGN
ENGR
PROJ
REL
APPROVED
APPROVED
DO NOT SCALE DRAWING
LOGIC DIAGRAM
INTERRUPT TRAP
DM 342
CODE IDENT NO 21101
SIZE D
91D0362
REV A
SCALE
SHEET 2 OF 3

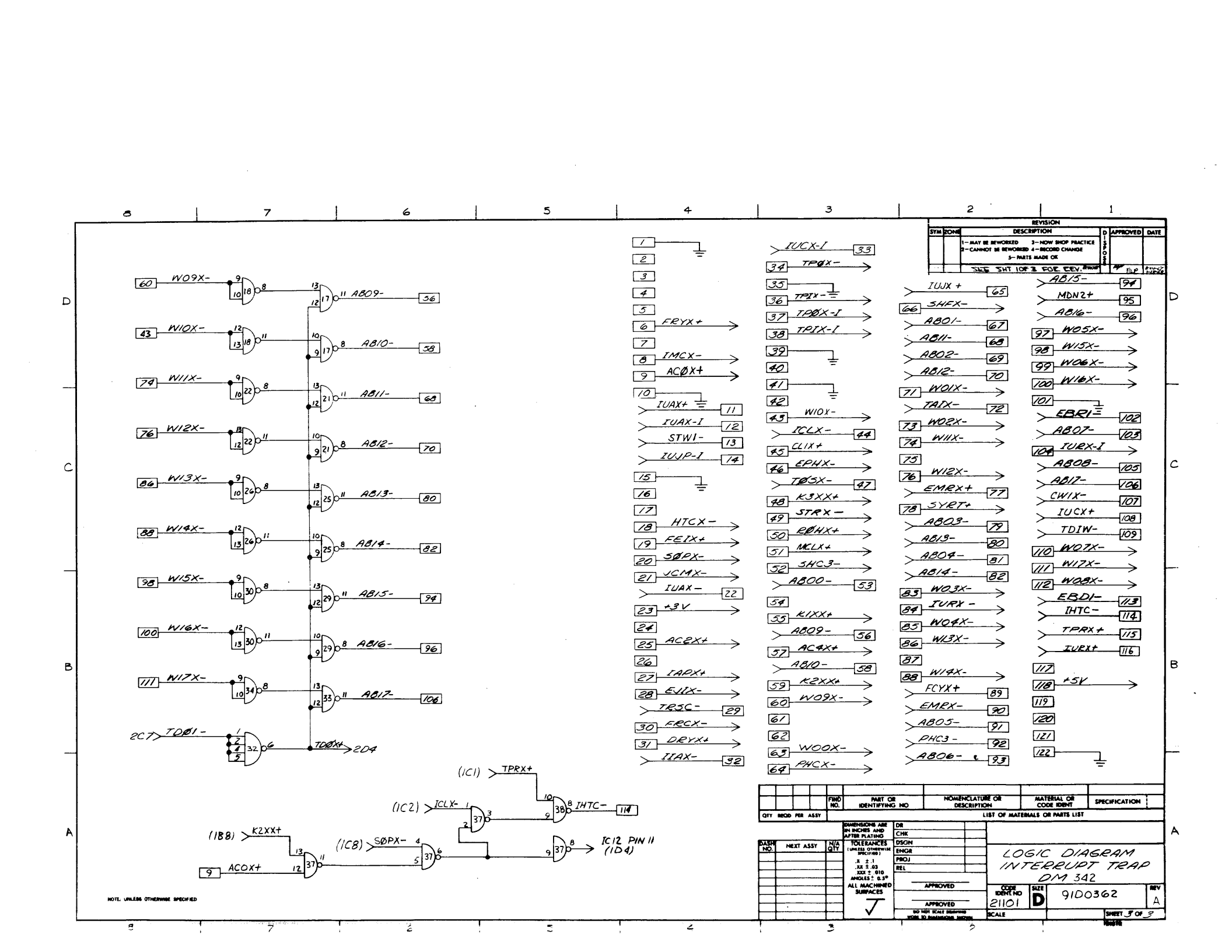

SYM	ZONE	REVISION DESCRIPTION	APPROVED	DATE
		1-MAY BE REWORKED 3-NOW SHOP PRACTICE 2-CANNOT BE REWORKED 4-RECORD CHANGE 5-PARTS MADE OK		
		SHEET SHT 1 OF 3 FOR REV.		

FIND NO.	PART OR IDENTIFYING NO	NOMENCLATURE OR DESCRIPTION	MATERIAL OR CODE IDENT	SPECIFICATION
QTY REQD PER ASSY	LIST OF MATERIALS OR PARTS LIST			

DASH NO.	NEXT ASSY	N/A QTY

DIMENSIONS ARE IN INCHES AND AFTER PLATING
TOLERANCES (UNLESS OTHERWISE SPECIFIED)
.X ±.1
.XX ±.03
.XXX ± .010
ANGLES ± 0.5°
ALL MACHINED SURFACES

DR
CHK
DSGN
ENGR
PROJ
REL

APPROVED
APPROVED
DO NOT SCALE DRAWING WORK TO DIMENSIONS SHOWN

LOGIC DIAGRAM
INTERRUPT TRAP
DM 342

CODE IDENT NO	SIZE	91D0362	REV
21101	D		A

SCALE

SHEET 3 OF 3

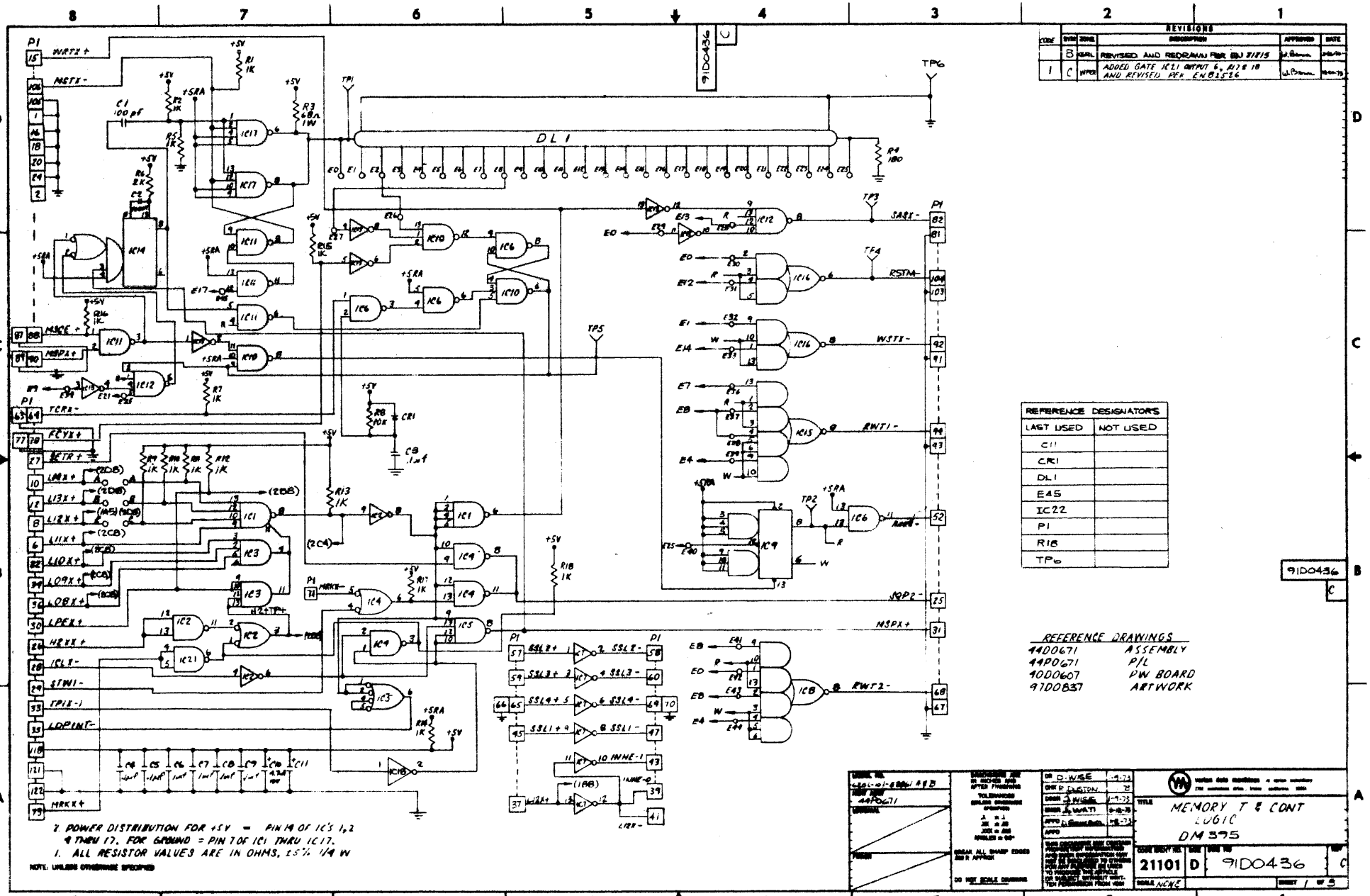
9100436 C
DL1
TP1
TP2
TP3
TP4
TP5
TP6
P1
MSTX+
MSTX-
MSCE+
MSPX+
TCRX-
RCVX+
RCTR+
MRKX+
SARX-
RSTM-
WSTX-
ENT1-
ENT2-
MSPX+
PWT2-
SSL2+
SSL3+
SSL4+
SSL1+
SSL2-
SSL3-
SSL4-
SSL1-
INME-1
INME-2
LDPINT-
STM1-
TPIE-1
R1 1K
R2 1K
R3 68Ω 1W
R4 180
R5 1K
R6 2K
R7 1K
R8 10K
R9 1K
R10 1K
R11 1K
R12 1K
R13 1K
R14 1K
R15 1K
R16 1K
R17 1K
R18 1K
C1 100 pf
C2
C3
C4
C5
C6
C7
C8
C9
C10 4.7 uf 10V
C11
CR1
IC1
IC2
IC3
IC4
IC5
IC6
IC7
IC8
IC9
IC10
IC11
IC12
IC13
IC14
IC15
IC16
IC17
IC18
IC21
IC22
E45
(2DB)
(2CB)
(2C4)
(2B8)
(2C8)
(2A8)
(2B4)
(2A4)
(2C2)
(2B2)
(2A2)
(2C1)
(2B1)
(2A1)
(1BB)
(1AB)
(1A8)
(1A4)
(1A2)
(1A1)
(1B4)
(1B2)
(1B1)
(1C1)
(1C2)
(1C4)
(1C8)
(1B8)
(1C4)
(1C2)
(1C1)
(1B8)
(1B4)
(1B2)
(1B1)
(1A8)
(1A4)
(1A2)
(1A1)
(1C1)
(1C2)
(1C4)
(1C8

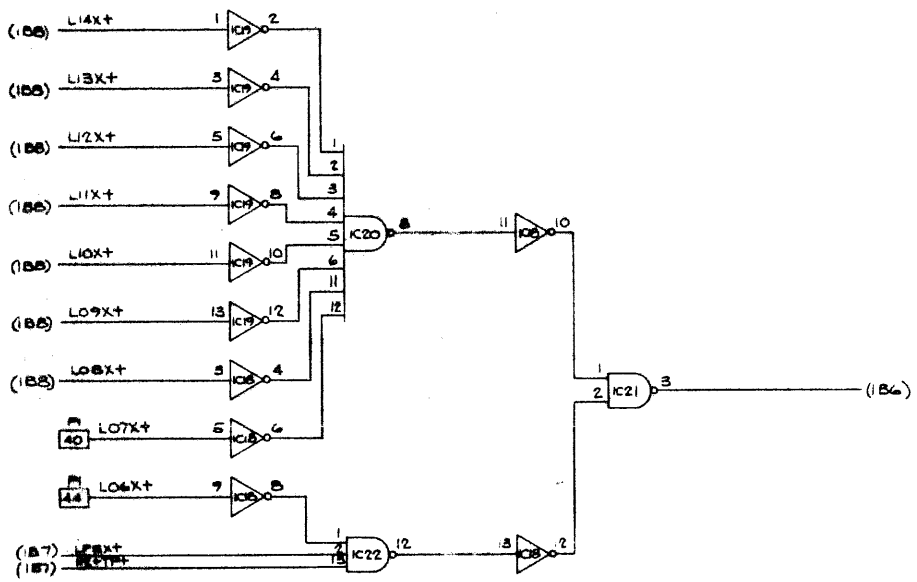

REVISIONS

ZONE	DESCRIPTION	APPROVED	DATE

91D0436 C

NOTE: UNLESS OTHERWISE SPECIFIED

SIZE	DWG NO	REV
D	91D0436	C

21101

SHEET 2 OF 3

9100436 C

REVISIONS			
ZONE	DESCRIPTION	APPROVED	DATE
	SEE SHEET 1		

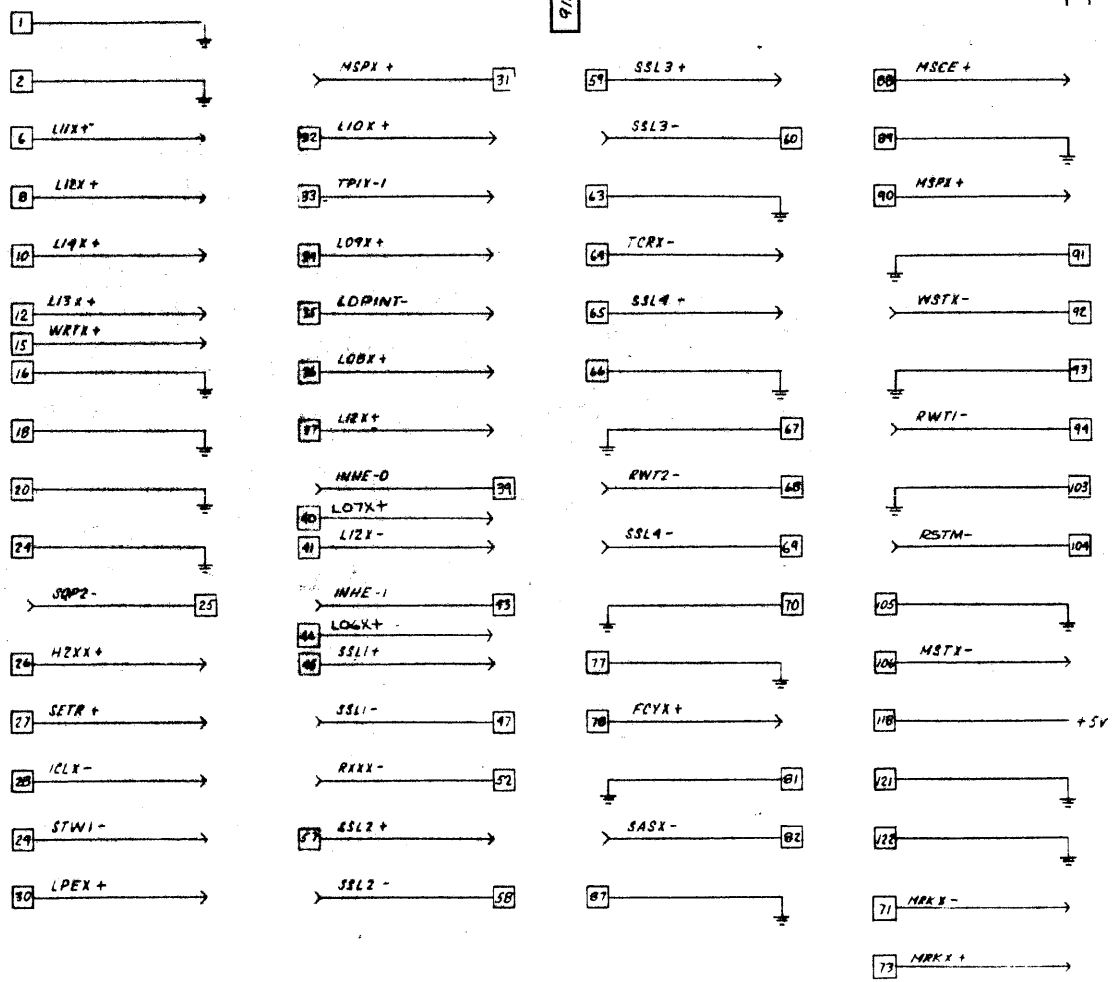

9100436 C

NOTE UNLESS OTHERWISE SPECIFIED

CODE IDENT NO	SIZE	DWG NO	REV
21101	D	9100436	

SCALE NONE SHEET 3 OF 4

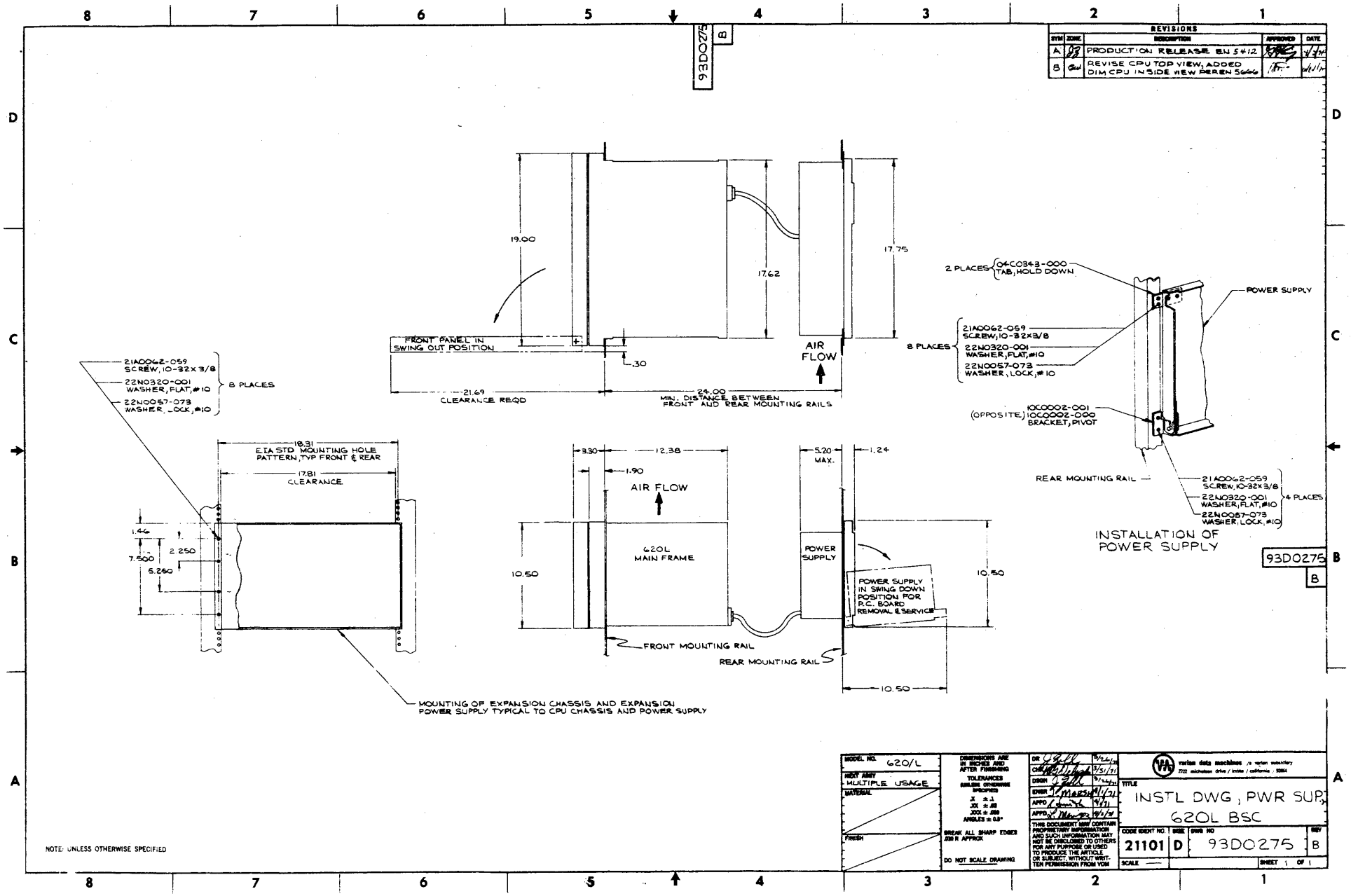

93D0275 B
REVISIONS
SYM ZONE DESCRIPTION APPROVED DATE
A PRODUCTION RELEASE EN 5412
B REVISE CPU TOP VIEW, ADDED DIM CPU INSIDE VIEW PER EN 5666
19.00
17.62
17.75
FRONT PANEL IN SWING OUT POSITION
.30
AIR FLOW
21.69 CLEARANCE REQD
24.00 MIN. DISTANCE BETWEEN FRONT AND REAR MOUNTING RAILS
21A0062-059 SCREW, 10-32X3/8
22N0320-001 WASHER, FLAT, #10
22N0057-073 WASHER, LOCK, #10
8 PLACES
18.31 EIA STD MOUNTING HOLE PATTERN, TYP FRONT & REAR
17.81 CLEARANCE
1.46
2.250
7.500
5.250
3.30
12.38
1.90
AIR FLOW
620L MAIN FRAME
10.50
5.20 MAX.
1.24
POWER SUPPLY
POWER SUPPLY IN SWING DOWN POSITION FOR P.C. BOARD REMOVAL & SERVICE
10.50
FRONT MOUNTING RAIL
REAR MOUNTING RAIL
10.50
MOUNTING OF EXPANSION CHASSIS AND EXPANSION POWER SUPPLY TYPICAL TO CPU CHASSIS AND POWER SUPPLY
2 PLACES 04C0343-000 TAB, HOLD DOWN
POWER SUPPLY
8 PLACES 21A0062-059 SCREW, 10-32X3/8
22N0320-001 WASHER, FLAT, #10
22N0057-073 WASHER, LOCK, #10
(OPPOSITE) 10C0002-001 10C0002-000 BRACKET, PIVOT
REAR MOUNTING RAIL
21A0062-059 SCREW, 10-32X3/8
22N0320-001 WASHER, FLAT, #10
22N0057-073 WASHER, LOCK, #10
4 PLACES
INSTALLATION OF POWER SUPPLY
93D0275 B
NOTE: UNLESS OTHERWISE SPECIFIED
MODEL NO. 620/L
NEXT ASSY MULTIPLE USAGE
MATERIAL
FINISH
DIMENSIONS ARE IN INCHES AND AFTER FINISHING
TOLERANCES (UNLESS OTHERWISE SPECIFIED)
.X ± .1
.XX ± .03
.XXX ± .010
ANGLES ± 0.5°
BREAK ALL SHARP EDGES .030 R APPROX
DO NOT SCALE DRAWING
DR 3/26/71
CHK 3/31/71
DSGN 3/26/71
ENGR 4/1/71
APPD 4/1/71
APPD 4/2/71
THIS DOCUMENT MAY CONTAIN PROPRIETARY INFORMATION AND SUCH INFORMATION MAY NOT BE DISCLOSED TO OTHERS FOR ANY PURPOSE OR USED TO PRODUCE THE ARTICLE OR SUBJECT, WITHOUT WRITTEN PERMISSION FROM VDM
varian data machines /a varian subsidiary
7722 michelson drive / irvine / california 92664
TITLE INSTL DWG, PWR SUP, 620L BSC
CODE IDENT NO. 21101
SIZE D
DWG NO 93D0275
REV B
SCALE —
SHEET 1 OF 1

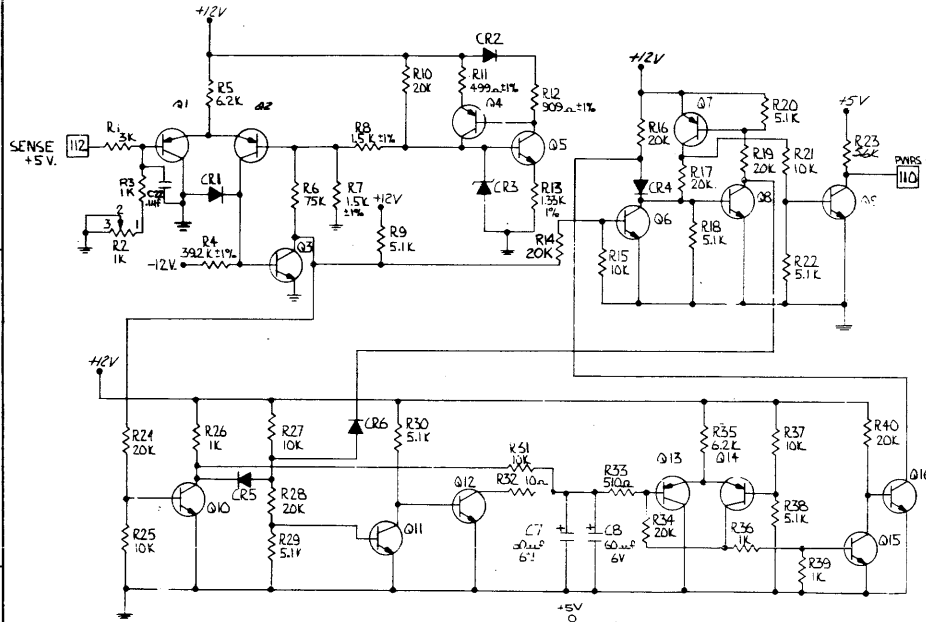

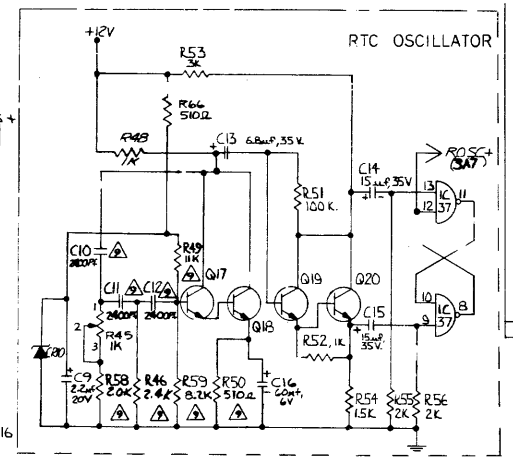

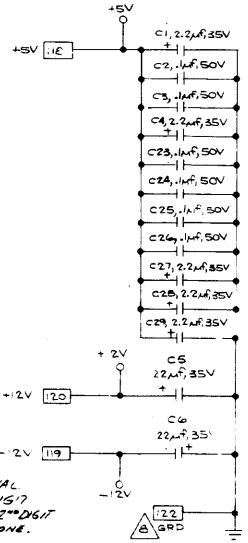

CODE	SYM	ZONE	REVISION DESCRIPTION (1—MAY BE REWORKED 3—NOW SHOP PRACTICE 2—CANNOT BE REWORKED 4—RECORD CHANGE 5—PARTS MADE OK)	D ENGINEERING	APPROVED	DATE
	X-1		PLOTOTYPE RELEASE			
	X-2		REVISED & REDRAWN			5-7-68
	X3		REVISED & REDRAWN			5-5-68
	A		PRODUCTION RELEASE, EN 2301			2-28-68
	B		R45 IS 1K WAS 500Ω PER EN 2476			4-3-68
	C		ADDED IC41 IC21 PER EN 2493			5-20-68
	D		ADDED IC42 PER EN 2765			1-23-69
	E		SHT 2 KIEK2 B2A0015-000 WAS B4A0004-001 & REVISED P/N NO.5 PER EN 2986			5-15-69
	F		ADDED CR10, DELETED Q21 PER EN 3274			8-18-69
	G	JB	DELETED NOTES 3, 4, 5, & ALL VDM P/N'S FROM F/D PER EN 3471			11/1/69
	H	CW	ADDED C22 .1μf CAP PER EN 5581			7-2-70
	J	CW	ADDED SILKSCREEN AND SOLDERMASK TO REF DWG PER EN 80012			7-4-71
	K	GRL	ADDED C23 THRU C29 PER EN 81082			8/10/72
1	L	WED	ADDED C30 SHT 2 EN 82509			12/27/73

⚠ VALUES SHOWN ARE FOR 8KHZ FREQ. RANGE. FOR OTHER FREQ. RANGES REFER TO SPECIFICATION 5W6 & 5W20.
⚠ SEE SHT 2 FOR A COMPLETE LISTING OF GND PINS
7. PWR DISTRIBUTION TO IC 1, 2: VIN 16=+5V, PIN 7=GND (EXCEPT FOR NOTE 6)
6. PWR DISTRIBUTION TO IC 13, 19, 20, 26, 3, 27 & 33: PIN 4=+5V PIN 11=GND
~~5. ALL IC'S ARE 4240008~~
~~4. ALL TRANSISTORS ARE 7651072~~
~~3. ALL DIODES ARE 7751017~~
2. ALL RESISTORS ARE 1/4W, 5%.
1. THE SYMBOLS XXX >— AND —> INDICATE A SIGNAL SOURCE AND FLOW LOCATION CODES; THE FIRST DIGIT INDICATES SHEET NO, THE LETTER A HORIZ & THE 2ND DIGIT A VERTICAL ZONE.
NOTE: UNLESS OTHERWISE SPECIFIED

REFERENCE DRAWINGS
97D0642 - SILKSCREEN
97D0641 - SOLDERMASK
97D0134 - PHOTOMASTER
4C00201 - BOARD DETAIL
4400185 - ASSEMBLY
44P0185 - PARTS LIST

LAST REFERENCE DESIGNATIONS USED
R68 | C30 | CR10 | Q20 | IC42 | K2

REFERENCE DESIGNATIONS NOT USED
CR8, R57, R43, R44, R47

FIND NO.	PART OR IDENTIFYING NO	NOMENCLATURE OR DESCRIPTION	MATERIAL OR CODE IDENT	SPECIFICATION
QTY REQD PER ASSY		LIST OF MATERIALS OR PARTS LIST		

DASH NO.	NEXT ASSY	N/A QTY
	4400185	REF

DIMENSIONS ARE IN INCHES AND AFTER PLATING
TOLERANCES (UNLESS OTHERWISE SPECIFIED)
.X ± .1
.XX ± .03
.XXX ± .010
ANGLES ± 0.5°
ALL MACHINED SURFACES

DR	4/15/68
CHK	4/23/68
DSGN	5/4/68
ENGR	7/1/68
PROJ	7/10/68
REL	7/3/68
APPROVED	7/3/68
APPROVED	

DO NOT SCALE DRAWING
WORK TO DIMENSIONS SHOWN

varian data machines
a varian subsidiary
newport beach california

LOGIC DIAGRAM
DM 123-3
PFIR AND RTC
G20 & -13/14

CODE IDENT NO	SIZE		REV
21101	D	95D0135	L

SCALE | SHEET 1 OF 4

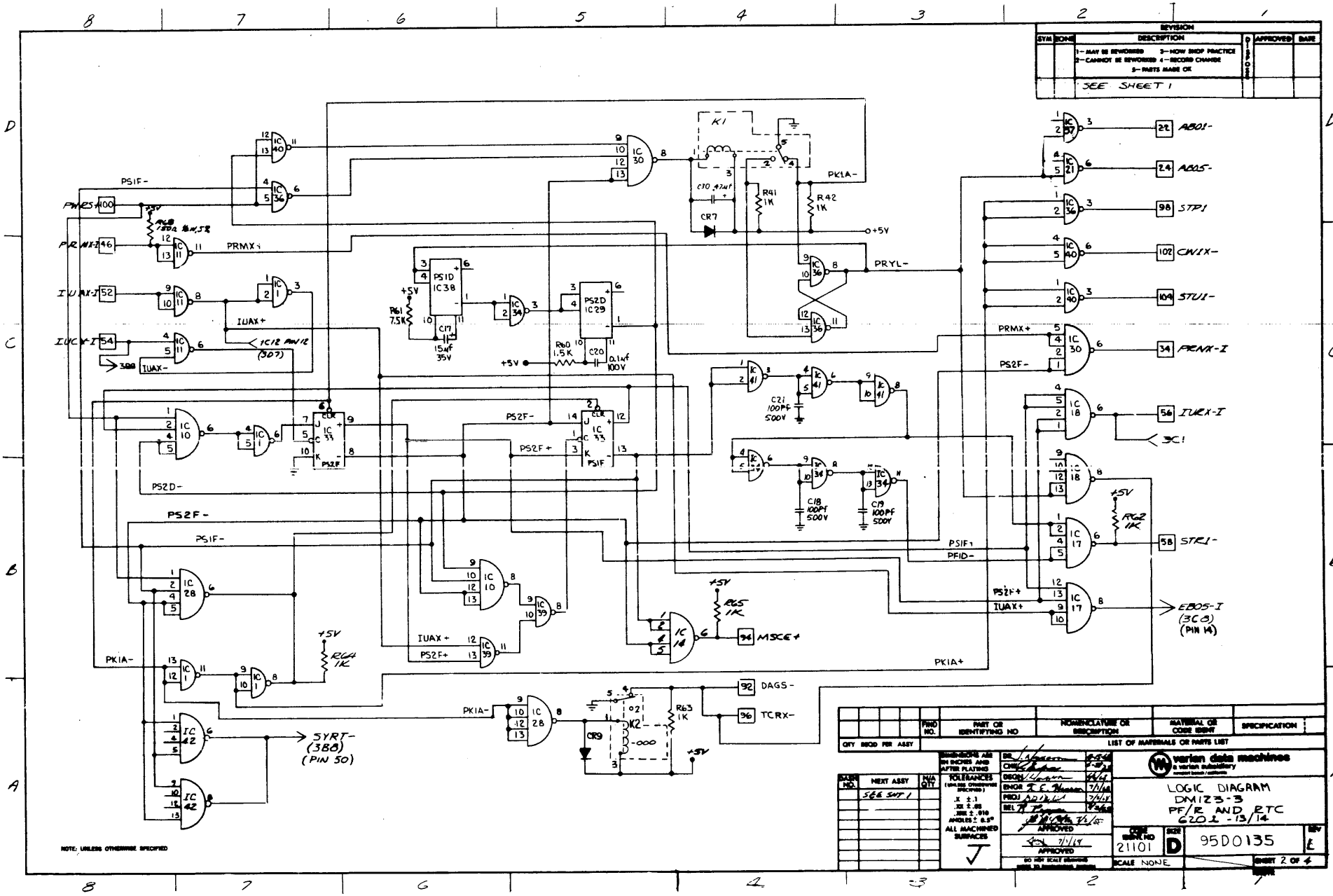

REVISION
SYM ZONE DESCRIPTION DISPOSE APPROVED DATE
1- MAY BE REWORKED 3- NOW SHOP PRACTICE
2- CANNOT BE REWORKED 4- RECORD CHANGE
5- PARTS MADE OK
SEE SHEET 1
PS1F-
PWRS+ 100
PRMX-I 46
IUAX-I 52
IUCX-I 54
PRMX+
IUAX+
IUAX-
IC12 PIN 12 (307)
PS1D IC38
PS2D IC29
R61 7.5K
C17 15uf 35V
R60 1.5K
C20 0.1uf 100V
K1
C30 .47uf
CR7
R41 1K
R42 1K
PK1A-
+5V
PRYL-
PS2F-
PS2F+
PS2D-
PS1F-
PS1F+
PFID-
PK1A+
IC 33
IC 28
IC 10
IC 39
IC 14
IC 42
IC 40
IC 36
IC 30
IC 41
IC 34
IC 18
IC 17
IC 21
IC 37
C21 100PF 500V
C18 100PF 500V
C19 100PF 500V
R62 1K
R65 1K
R64 1K
R63 1K
MSCE+
DAGS-
TCRX-
CR9
K2
SYRT- (3B8) (PIN 50)
AB01-
AB05-
STP1
CW1X-
STU1-
PRNX-I
IURX-I
3C1
STR1-
EB05-I (3C8) (PIN 14)
NOTE: UNLESS OTHERWISE SPECIFIED
QTY REQD PER ASSY
FIND NO.
PART OR IDENTIFYING NO
NOMENCLATURE OR DESCRIPTION
MATERIAL OR CODE IDENT
SPECIFICATION
LIST OF MATERIALS OR PARTS LIST
DASH NO.
NEXT ASSY
N/A QTY
SEE SHT 1
DIMENSIONS ARE IN INCHES AND AFTER PLATING
TOLERANCES (UNLESS OTHERWISE SPECIFIED)
.X ±.1
.XX ±.05
.XXX ±.010
ANGLES ± 0.5°
ALL MACHINED SURFACES
DR
CHK
DSGN
ENGR
PROJ
REL
APPROVED
DO NOT SCALE DRAWING
varian data machines
a varian subsidiary
LOGIC DIAGRAM
DM123-3
PF/R AND RTC
6201-13/14
CODE IDENT NO 21101
SIZE D
95D0135
REV E
SCALE NONE
SHEET 2 OF 4

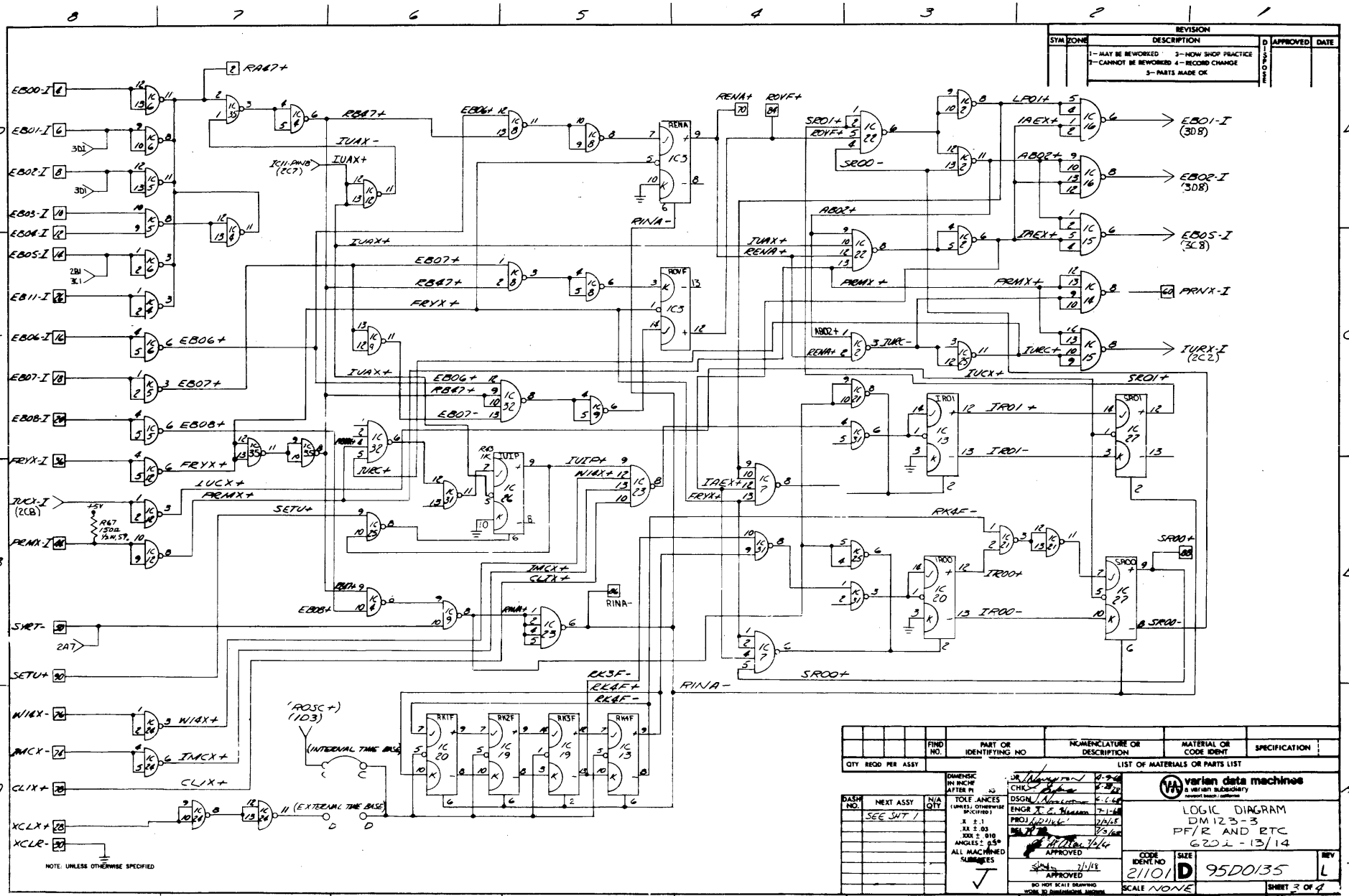
REVISION
SYM ZONE DESCRIPTION APPROVED DATE
1 – MAY BE REWORKED 3 – NOW SHOP PRACTICE
2 – CANNOT BE REWORKED 4 – RECORD CHANGE
5 – PARTS MADE OK
EB00-I
EB01-I
EB02-I
EB03-I
EB04-I
EB05-I
EB11-I
EB06-I
EB07-I
EB08-I
FRYX-I
LUCX-I (2C8)
PRMX-I
SMRT-
SETU+
W16X-
IMCX-
CLIX+
XCLX+
XCLR-
RA67+
RB67+
IUAX+
IUAX-
EB07+
FRYX+
EB06+
EB08+
SETU+
LUCX+
PRMX+
IMCX+
CLIX+
W16X+
RINA-
RENA+
ROVF+
SR01+
SR00-
LF01+
IAEX+
ABX2+
EB01-I (3D8)
EB02-I (3D8)
EB05-I (3C8)
PRMX+
PRNX-I (6A)
NBX2+
IUAC+
IURX-I (2C2)
IR01+
IR01-
IR00+
IR00-
SR00+
RK4E-
RK3F-
RK4F+
RK4F-
SR00-
IUIP+
W16X+
IAEX+
RINA-
(ROSC+) (1D3)
(INTERNAL TIME BASE)
(EXTERNAL TIME BASE)
RK1F
RK2F
RK3F
RK4F
RENA
ROVF
IR01
IR00
SR01
SR00
IC3
IC13
IC20
IC19
IC23
IC27
R67 1.52Ω 1/2W, 5%
+5V
2A7
3D1
2B1
3C1
NOTE: UNLESS OTHERWISE SPECIFIED
FIND NO.
PART OR IDENTIFYING NO
NOMENCLATURE OR DESCRIPTION
MATERIAL OR CODE IDENT
SPECIFICATION
QTY REQD PER ASSY
LIST OF MATERIALS OR PARTS LIST
DASH NO.
NEXT ASSY
N/A QTY
SEE SHT 1
DIMENSIONS IN INCHES AFTER PL
TOLERANCES (UNLESS OTHERWISE SPECIFIED)
.X ± .1
.XX ± .03
.XXX ± .010
ANGLES ± .5°
ALL MACHINED SURFACES
DR
CHK
DSGN
ENGR
PROJ
APPROVED
APPROVED
DO NOT SCALE DRAWING
WORK TO DIMENSIONS ONLY
varian data machines
a varian subsidiary
newport beach / california
LOGIC DIAGRAM
DM123-3
PF/R AND RTC
6201-13/14
CODE IDENT NO
21101
SIZE
D
95D0135
REV
L
SCALE NONE
SHEET 3 OF 4

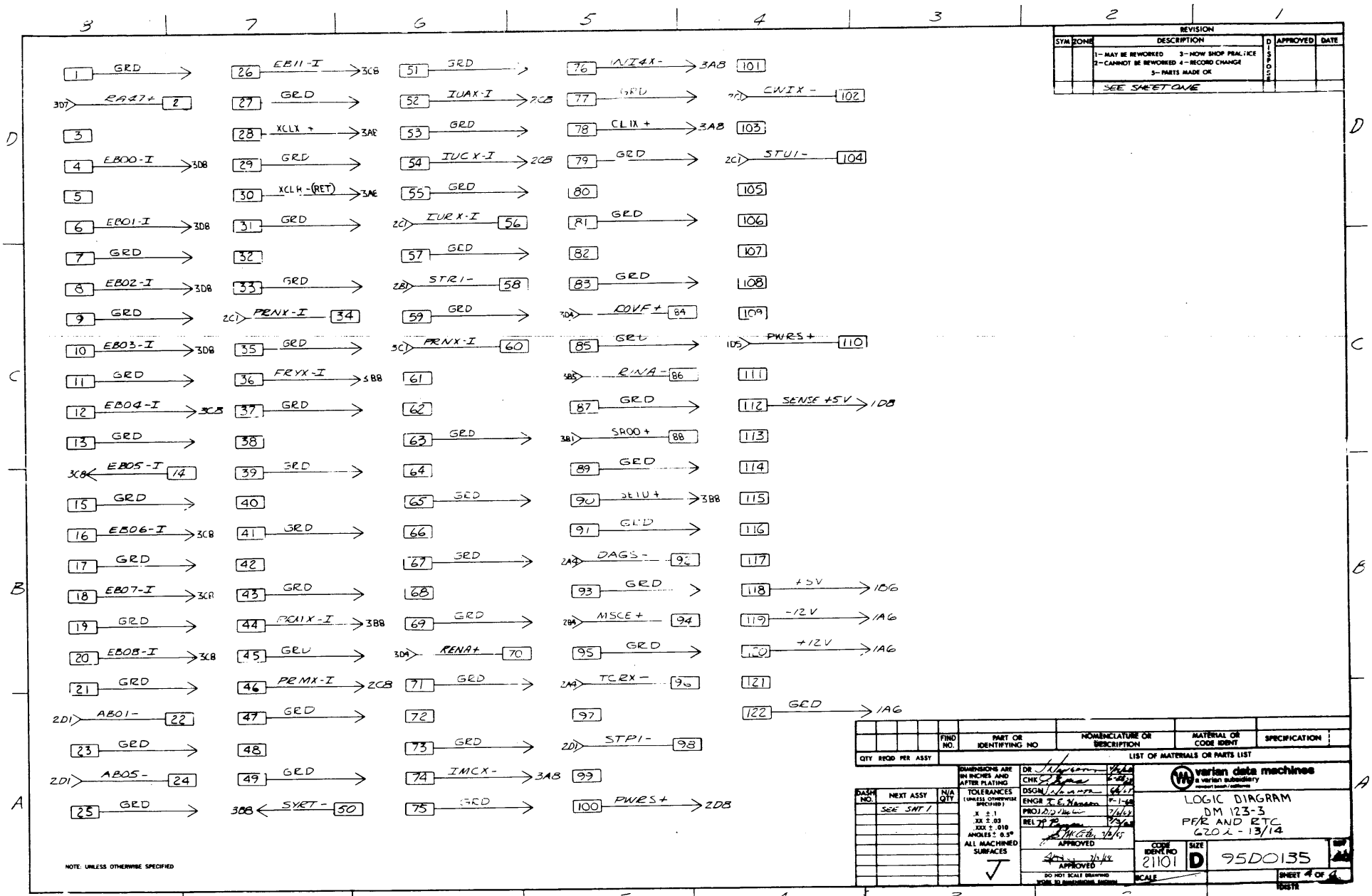
1 GRD
2 RA47+ 3D7
3
4 EB00-I 3D8
5
6 EB01-I 3D8
7 GRD
8 EB02-I 3D8
9 GRD
10 EB03-I 3D8
11 GRD
12 EB04-I 3C8
13 GRD
14 EB05-I 3C8
15 GRD
16 EB06-I 3C8
17 GRD
18 EB07-I 3C8
19 GRD
20 EB08-I 3C8
21 GRD
22 AB01- 2D1
23 GRD
24 AB05- 2D1
25 GRD
26 EB11-I 3C8
27 GRD
28 XCLX+ 3A8
29 GRD
30 XCLH-(RET) 3A8
31 GRD
32
33 GRD
34 PRNX-I 2C1
35 GRD
36 FRYX-I 5B8
37 GRD
38
39 GRD
40
41 GRD
42
43 GRD
44 PCAIX-I 3B8
45 GRD
46 PRMX-I 2C8
47 GRD
48
49 GRD
50 SYRT- 3D8
51 GRD
52 IUAX-I 2C8
53 GRD
54 IUCX-I 2C8
55 GRD
56 IURX-I 2C1
57 GRD
58 STR1- 2B1
59 GRD
60 PRNX-I 3C1
61
62
63 GRD
64
65 GRD
66
67 GRD
68
69 GRD
70 RENA+ 3D4
71 GRD
72
73 GRD
74 IMCX- 3A8
75 GRD
76 IVI4X- 3A8
77 GRD
78 CLIX+ 3A8
79 GRD
80
81 GRD
82
83 GRD
84 DOVF+ 3D4
85 GRD
86 RINA- 5B5
87 GRD
88 SR00+ 3B1
89 GRD
90 3E1U+ 3B8
91 GRD
92 DAGS- 2A4
93 GRD
94 MSCE+ 2B4
95 GRD
96 TCRX- 2A4
97
98 STP1- 2D1
99
100 PWRS+ 2D8
101
102 CWIX- 2D1
103
104 STU1- 2C1
105
106
107
108
109
110 PWRS+ 1D5
111
112 SENSE +5V 1D8
113
114
115
116
117
118 +5V 1D6
119 -12V 1A6
120 +12V 1A6
121
122 GRD 1A6
NOTE: UNLESS OTHERWISE SPECIFIED
REVISION
SYM ZONE DESCRIPTION DISCOS APPROVED DATE
1-MAY BE REWORKED 2-CANNOT BE REWORKED 3-NOW SHOP PRACTICE 4-RECORD CHANGE 5-PARTS MADE OK
SEE SHEET ONE
FIND NO. PART OR IDENTIFYING NO NOMENCLATURE OR DESCRIPTION MATERIAL OR CODE IDENT SPECIFICATION
QTY REQD PER ASSY
LIST OF MATERIALS OR PARTS LIST
DASH NO. NEXT ASSY N/A QTY
SEE SHT 1
DIMENSIONS ARE IN INCHES AND AFTER PLATING
TOLERANCES (UNLESS OTHERWISE SPECIFIED) .X ± 1 .XX ± .03 .XXX ± .010 ANGLES ± 0.5°
ALL MACHINED SURFACES
DR CHK DSGN ENGR PROJ REL TO PROD APPROVED APPROVED
DO NOT SCALE DRAWING WORK TO DIMENSIONS SHOWN
varian data machines a varian subsidiary newport beach / california
LOGIC DIAGRAM DM 123-3 PFR AND RTC G20 2 - 13/14
CODE IDENT NO 21101 SIZE D 95D0135
SCALE
SHEET 4 OF 4

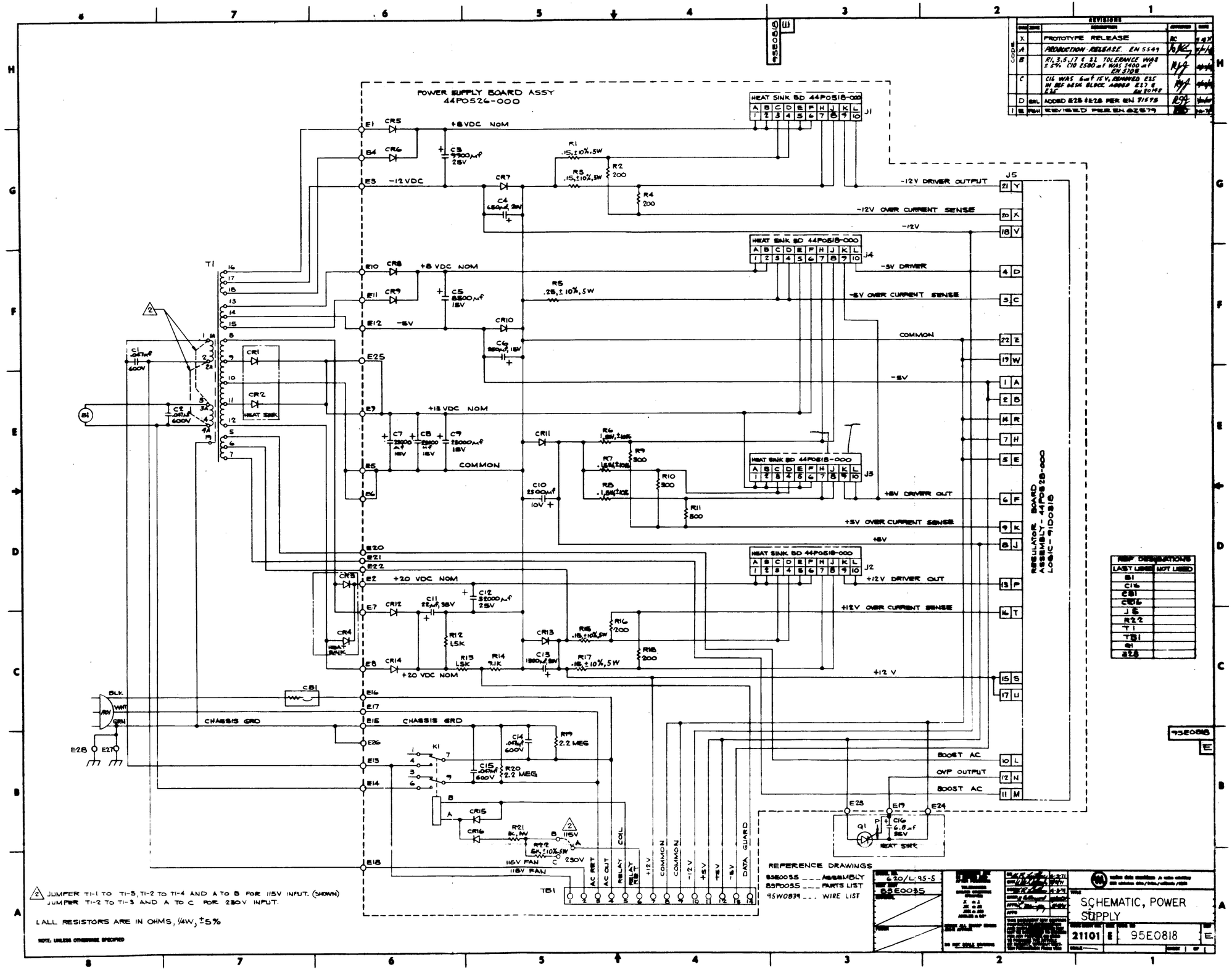

REF DESIGNATIONS	
LAST USED	NOT USED
B1	
C16	
CB1	
CR16	
J5	
R22	
T1	
TB1	
Q1	
Z28	

REFERENCE DRAWINGS

85E0035 ___ ASSEMBLY
85P0035 ___ PARTS LIST
95W0839 ___ WIRE LIST

2 JUMPER T1-1 TO T1-3, T1-2 TO T1-4 AND A TO B FOR 115V INPUT. (SHOWN)
JUMPER T1-2 TO T1-3 AND A TO C FOR 230V INPUT.

LALL RESISTORS ARE IN OHMS, 1/4W, ±5%

NOTE: UNLESS OTHERWISE SPECIFIED

REVISIONS				
CODE	SYM	ZONE	DESCRIPTION	APPROVED	DATE
	X		PROTOTYPE RELEASE	RC	
	A		PRODUCTION RELEASE EN 5549		
	B		R1, 3, 5, 17 & 22 TOLERANCE WAS ±5%. C10 2500 µf WAS 2400 µf EN 5708		
	C		C16 WAS 6 µf 15V, REMOVED E25 IN REF DESIG BLOCK ADDED E27 & E28 EN 30148		
	D	GRL	ADDED E28 & E28 PER EN 71575		
1	E	PSH	REVISED PER EN 82579		

95E0818 E

620/L-95-5

85E0035

SCHEMATIC, POWER SUPPLY

21101 E 95E0818 E

DISTR CODE

3238441

REVISIONS					
LTR	ZONE	DESCRIPTION	SIGNATURE AND DATE DFT	CHK	ENGRG
A		ERN 786-C	3-2-72		

PIN ASSIGNMENT

PIN	SIDE "A"	SIDE "B"
1	GND	GND
2	CA1	CA1
3	CC1	CC1
4	CA3	CA3
5	CC3	CC3
6	CA5	CA5
7	CC5	CC5
8	CA7	CA7
9	CC7	CC7
10	SPARE	SPARE
11	SPARE	SPARE
12	SPARE	SPARE
13	X56	X57
14	X54	X55
15	X52	X53
16	X50	X51
17	RTI-1	RTI-1
18	GND	GND
19	RTI-2	RTI-2
20	S11	$\overline{S11}$
21	I11	$\overline{I36}$
22	S6	I6
23	S15	$\overline{S15}$
24	I15	$\overline{I39}$
25	S9	I9
26	S5	$\overline{S5}$
27	I5	$\overline{I7}$
28	S7	I7
29	S0	$\overline{S0}$
30	I0	$\overline{I34}$
31	S4	I4
32	SPARE	SPARE
33	SPARE	SPARE
34	SPARE	SPARE
35	S1	$\overline{S1}$
36	I1	$\overline{S12}$
37	S12	I12
38	S14	$\overline{S14}$
39	I14	$\overline{S10}$
40	S10	I10
41	S3	$\overline{S3}$
42	I3	$\overline{S13}$
43	S13	I13
44	S8	$\overline{S8}$
45	I8	$\overline{S2}$
46	S2	I2
47	SPARE	SPARE
48	GND	GND
49	SPARE	SPARE
50	YS1	YS0
51	YS3	YS2
52	YS5	YS4
53	YS7	YS6
54	SPARE	SPARE
55	SPARE	SPARE
56	SPARE	SPARE
57	CA6	CA6
58	CC6	CC6
59	CA4	CA4
60	CC4	CC4
61	CA2	CA2
62	CC2	CC2
63	CA0	CA0
64	CC0	CC0
65	GND	GND

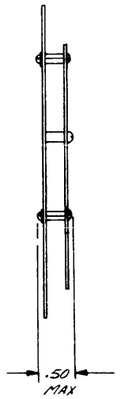

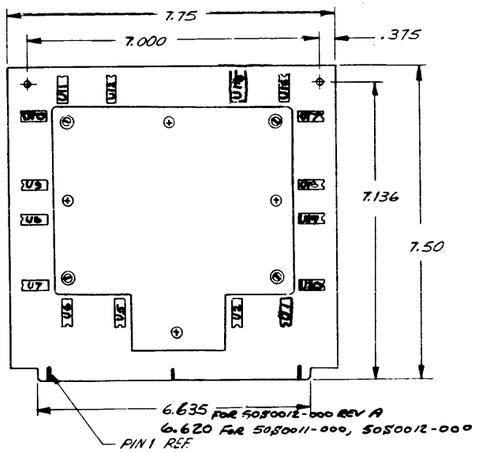

SIDE "A" SHOWN

TYPICAL TEST PROGRAM TIMING

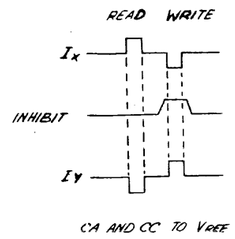

CA AND CC TO V_{REF}

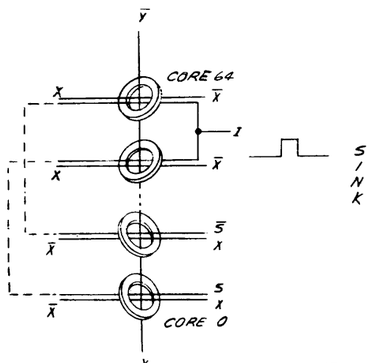

TYPICAL STACK LINES

	DRIVE U20 CC0 CA0	U9 CC1 CA1	U18 CC2 CA2	U7 CC3 CA3	U19 CC4 CA4	U10 CC5 CA5	U11 CC6 CA6	U8 CC7 CA7
X50	0	2	16	18	45	47	61	63
X51	1	3	17	19	44	46	60	62
X52	4	6	20	22	41	43	57	59
X53	5	7	21	23	40	42	56	58
X54	8	10	24	26	37	39	53	55
X55	9	11	25	27	36	38	52	54
X56	12	14	28	30	33	35	49	51
X57	13	15	29	31	32	34	48	50

SINK

"X" DECODE DRIVE

	DRIVE U1 CC0 CA0	U11 CC1 CA1	U16 CC2 CA2	U6 CC3 CA3	U2 CC4 CA4	U12 CC5 CA5	U15 CC6 CA6	U5 CC7 CA7
Y50	0	2	16	18	32	34	48	50
Y51	1	3	17	19	33	35	49	51
Y52	4	6	20	22	36	38	52	54
Y53	5	7	21	23	37	39	53	55
Y54	8	10	24	26	40	42	56	58
Y55	9	11	25	27	41	43	57	59
Y56	12	14	28	30	44	46	60	62
Y57	13	15	29	31	45	47	61	63

"Y" DIODE DECODE

WORST CASE PATTERN

	Y_0	Y_1	Y_2	Y_3	...	Y31	Y32		...	Y63
X0	1	1	1	1		1	0	0		0
X1	0	0	0	0		0	1	1		1
X2	1	1	1	1		1	0	0		0
X3	0	0	0	0		0	1	1		1
X63	0	0	0	0		0	1	1		1

SINK

6 INTEGRATED CIRCUIT U3, U4, U13 & U14 NOT USED.

5 PCB TYPE: PLANAR PLUGGABLE. COMPONENTS AND CORES ON ONE SIDE.

4 CAPACITY: 4KX18 18 MIL MAX. (COINCIDENT)
8KX9 18 MIL MAX.
(COINCIDENT/ANTICOINCIDENT, 4K DECODE).

3 WIRING: 3 WIRE - 3D
X & Y - CONTINOUSLY WIRED
SENSE/INHIBIT - BOWTIE 3 POINT TERMINATION.

2 DIODE TYPE: INTERGRATED CIRCUIT - DIODE ARRAY, DUAL-IN-LINE 16 DIODES PER PACKAGE. AMPEX PN 586-687.

1 CONNECTION TYPE: TOTAL 130 CONTACTS, 65 CONTACTS EACH SIDE SPACED AT .100. MATING CONNECTOR TYPE IS MASTERITE IND. PN 008GR65-DR-B-X OR EQUIV.

NOTES: UNLESS OTHERWISE SPECIFIED.

3238441

PARTS LIST ☐

		S.O.N.
3256373	9403-4411	
NEXT ASSY	USED ON	
APPLICATION		

NOTICE

THIS DRAWING SHALL NOT BE DUPLICATED, USED FOR ANY PURPOSE OTHER THAN THAT FOR WHICH PROVIDED OR DISCLOSED, IN WHOLE OR IN PART WITHOUT THE WRITTEN CONSENT OF AMPEX CORPORATION. PROVIDED, HOWEVER, THAT IF THIS DRAWING IS SPECIFIED TO BE DELIVERED TO THE GOVERNMENT, OR TO A GOVERNMENT CONTRACTOR, PURSUANT TO A GOVERNMENT PRIME OR SUBCONTRACT, THE GOVERNMENT MAY MAKE SUCH USE OF THIS DRAWING AS IS PERMITTED BY THE APPLICABLE "DATA" CLAUSE SET FORTH IN SUCH CONTRACT OR SUBCONTRACT.

UNLESS OTHERWISE SPECIFIED
DIMENSIONS ARE IN INCHES AND INCLUDE CHEMICALLY APPLIED OR PLATED FINISHES.
TOL ± | 2 PLC | 3 PLC | ANG | — | — | — | —
REMOVE BURRS AND SHARP EDGES YES ☐ NO ☐
DO NOT SCALE THIS PRINT

SIGNATURE	DATE
DRAWN BY	
CHK BY	
DFT APPD	
ENGRG APPD	
AUTH BY	

MATERIAL:
FINISH:

AMPEX
COMPUTER PRODUCTS DIV
Culver City, California 90230

ELECTRICAL/MECHANICAL INTERFACE AND SCHEMATIC

SIZE	CODE IDENT NO.	
D	09150	3238441

SCALE NONE SHEET OF

ENGINEERING NOTICE

E.N. NO. 83017

varian data machines
a varian subsidiary

ISSUE DATE 6-4-74

MODEL NUMBER	EFFECTIVE SERIAL	W2D 6/4/74 PARTS DISPOSITION			
620/L-100	ALL		USE AS IS		SCRAP
DEVICE DM342 INTERRUPT TRAP		X	REWORK SEE PAGE 3		NOT APPLICABLE

TYPE OF INFORMATION

	DRAWING RELEASE	X	DRAWING CHANGE		RECORD CHANGE		SUBSTITUTION OR DEVIATION		STOP ORDER

REASON FOR ACTION

OUTPUT CWIX - (IC34-11) IS OR-TIED ON GROUND PLANE WITH A DTL OUTPUT OF PFR BOARD. DRIVING GATES MUST BE OPEN-COLLECTOR OR DTL. DTL GATE ON PFR UNABLE TO PULL DOWN ACTIVE PULLUP GATE ON INTERRUPT TRAP BOARD RELIABLY.

CHANGE CODE: 1

OUTSTANDING CODE 2 EN'S: 0

ACTION TO BE TAKEN

44P0598 P/L-INTERRUPT TRAP ASSY DM342

1. UPDATE REVISION LETTER OF REF DRAWINGS 44D0598, 91D0362 AND F/N 1 40D0511-000 PER THIS EN.
2. F/N 3 (65N2500-102)
   A. QTY IS: 15 WAS: 12
   B. REMARKS IS: R8-22 WAS: R8-19
3. F/N 16 (49A0042-000)
   A. QTY IS: 7 WAS: 6
   B. REMARKS IS: IC13,17,21,25,29,33,34 WAS: IC17,21,25,29,33,13
4. F/N 18 (49A0039-000)
   A. QTY IS: 5 WAS: 6
   B. REMARKS IS: IC18,22,26,30,31 WAS: IC18,22,26,30,31,34

DOCUMENTS AFFECTED

DOCUMENT	REV. IS	REV. WAS	DOCUMENT	REV. IS	REV. WAS	REFERENCE DOCUMENTS
44D0598	B	A	91C0362	B	A	RECO # 05866
44P0598	E	D	97D0712	C	B	
40D0511	C	B	97D0713	C	B	
			97D0714	C	B	

DRAFTSMAN		CHECKER		PROJECT ENGR.		RESP. MGR.		REVIEW BOARD
J. Luther	5-23-74	Brownfield	6/3/74	T.E. Hanson	6-4-74		6/4/74	

96A 0013-000F

ENGINEERING NOTICE

varian data machines
a varian subsidiary

E.N. No. 83017
PAGE 2 OF 3

91C0362 LOGIC- INTERRUPT TRAP DM342

1. SHEET 1 REFERENCE DESIGNATION BLOCK
   LAST USED IS: R22 WAS: R19

2. SHEET 2 ZONE B4 ADD R20 & R21 AS SHOWN

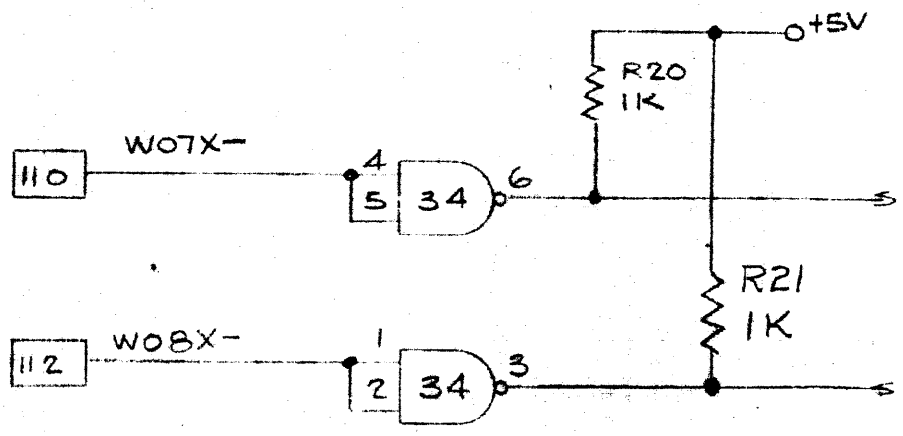

3. SHEET 3 ZONE B7 ADD R22 AS SHOWN

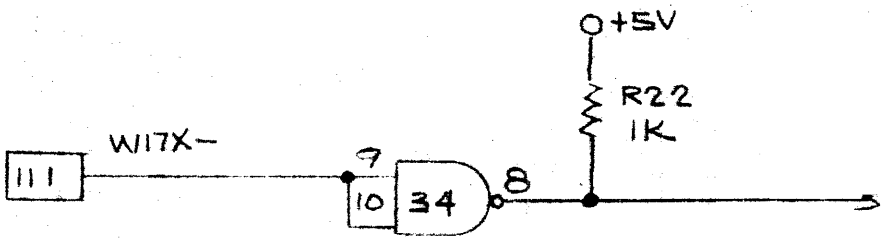

97D0712 ARTWORK DM342

REVISE TO CONFORM WITH CHANGES TO 91C0362 LOGIC

97D0713 SILKSCREEN DM342

97D0714 SOLDER MASK DM342

44D0598 ASSEMBLY DM342

REVISE TO CONFORM WITH CHANGES TO 97D0712 ARTWORK

40D0511 P.W. BOARD DM342

1. REVISE TO CONFORM WITH CHANGES TO 97D0712 ARTWORK.

2. UPDATE REVISION LETTER OF ARTWORK MASTERS 97D0712, 97D0713 AND 97D0714 PER THIS EN.

FORM 96A0013-01

ENGINEERING NOTICE

varian data machines
a varian subsidiary

REWORK INSTRUCTIONS

E.N. No. 83017
PAGE 3 OF 3

Reidentify the following revision letters by stamping an "X" over the old revision letter and restamping the new revision letter next to the "X".

Revision Is:	Revision Was:
44P0598-000 E	44P0598-000 D

44P0598-000 INTERRUPT TRAP BOARD DM342

1. REMOVE IC 34 (49A0039-000) AND REPLACE IC34 USING 49A0042-000 (74H01)
2. ADD 3 RESISTORS 1K, 1/4W, ±5% (65N2500-102) AS SHOWN

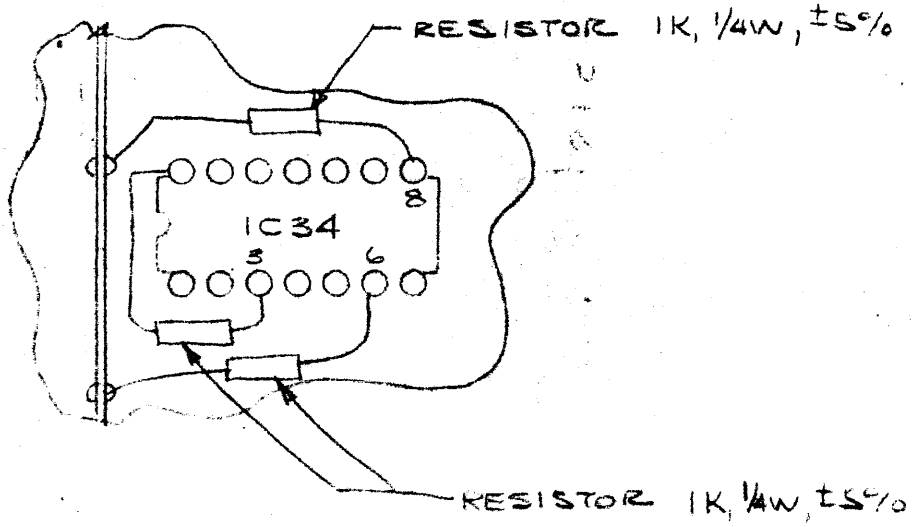

FORM 96A0013-001

ENGINEERING NOTICE

varian data machines
a varian subsidiary

E.N. NO. [illegible]
PAGE 1 OF 2
ISSUE DATE 6-17-73

MODEL NUMBER	EFFECTIVE SERIAL	PARTS DISPOSITION			
620L	EARLIEST OPPORTUNITY	X	USE AS IS		SCRAP
DEVICE			REWORK		NOT APPLICABLE
POWER SUPPLY					

TYPE OF INFORMATION

	DRAWING RELEASE	X	DRAWING CHANGE		RECORD CHANGE		SUBSTITUTION OR DEVIATION		STOP ORDER

REASON FOR ACTION

1. TO ADD NON-STANDARD HARDWARE REQUIREMENTS
2. TO REVISE HARDWARE CALLOUT
3. TO ELIMINATE POSSIBLE SHORTING OF HDW. TO HEATSINK
4. TO ADD MTG BRACKETS TO P.S. PARTS LIST

ACTION TO BE TAKEN

83P0035 PARTS LIST POWER SUPPLY

1.) UPDATE REVISION LETTER OF REFERENCE DRAWINGS PER THIS EN.

2.) DELETE FIND NO. 45 (79A0050-000)

3.) ADD THE FOLLOWING, QTY SHOWN SAME FOR ALL DASH NUMBERS.

QTY	F/N	PART NO.	DESC	REMARKS
2	48	79A0025-034	MICA WASHER	
1	49	79A0050-003	SPACER	
1	50	79A0050-004	WASHER	
1	51	79A0050-002	L.W. TERMINAL	
1	52	79A0050-001	JAM NUT	

DOCUMENTS AFFECTED

DOCUMENT	REV. IS	REV. WAS	DOCUMENT	REV. IS	REV. WAS	REFERENCE DOCUMENTS
83P0035	L	K				ECO # 4553
83E0035	H	G				4554
						4566

DRAFTSMAN		CHECKER		PROJECT ENGR.		RESP. MGR.		REVIEW BOARD
[signature]	6/15/73	[signature]	6/15/73	[signature]	6/15/73	[signature]	6/15/73 6/18/73	[signature]

23E0035 POWER SUPPLY ASSY

1) REVISE SECTION B-B AS SHOWN BELOW

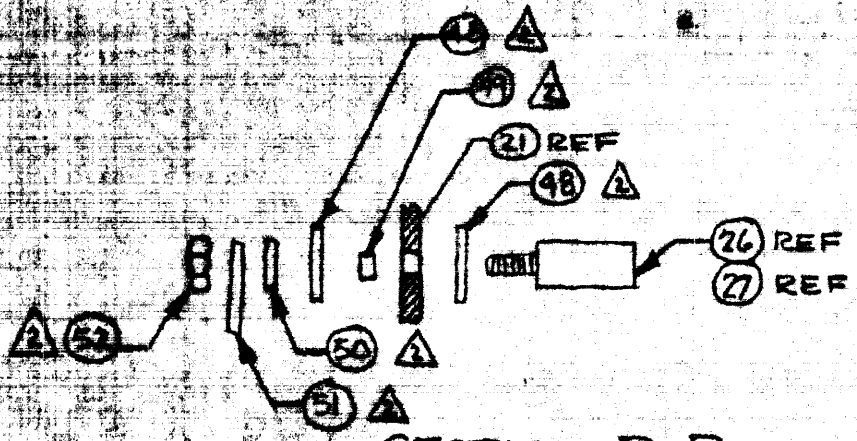

SECTION B-B
EXPLODED VIEW (TYP FOR CR1-CR4, Q1)

WAS!

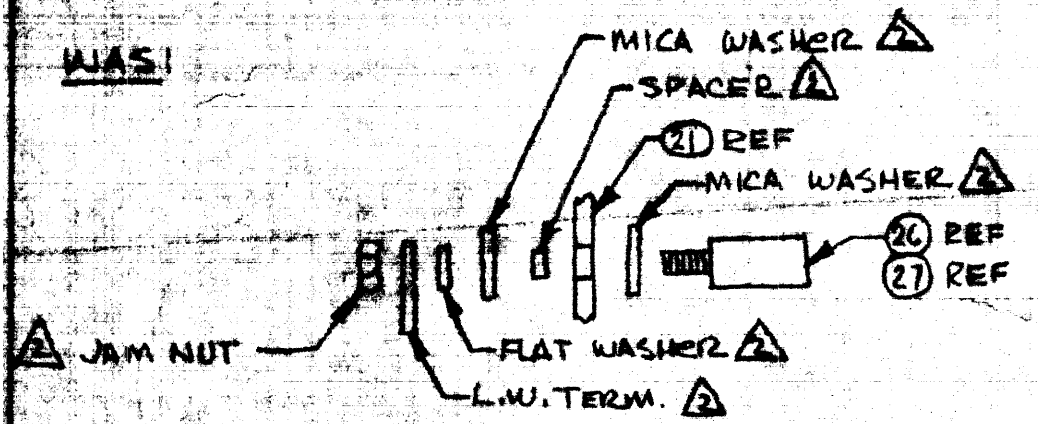

SECTION B-B
EXPLODED VIEW (TYP FOR CR1-CR4, Q1)
USE MTG KIT F/N 45 FOR Q1

ENGINEERING NOTICE

varian data mechines
a varian subsidiary

E.N. NO. 8[illegible]

ISSUE DATE 8-15-73

MODEL NUMBER	EFFECTIVE SERIAL	8/15/73 PARTS DISPOSITION			
620/L-100	EARLIEST	X	USE AS IS		SCRAP
DEVICE DM337 PROCESSOR CONT	OPPORTUNITY		REWORK		NOT APPLICABLE

TYPE OF INFORMATION

	DRAWING RELEASE	X	DRAWING CHANGE		RECORD CHANGE		SUBSTITUTION OR DEVIATION		STOP ORDER

REASON FOR ACTION

1. TO REMOVE JUMPER A-A

ACTION TO BE TAKEN

97D0697-ARTWORK-PROCESSOR CONTROL-DM337

1. REMOVE ETCH FROM P1-59 TO FEEDTHRU A
2. REMOVE ETCH FROM IC16-7 TO FEED THRU A
3. ADD ETCH FROM P1-59 TO IC16-7.

97D0698-SILKSCREEN-PROCESSOR CONT-DM337

1. REVISE PER CHANGES TO 97D0697

97D0699-SOLDER MASK-PROCESSOR CONT-DM337

1. REVISE PER CHANGES TO 97D0697

4000506-BD DETAIL-PROCESSOR CONT-DM337

1. UPDATE REV LETTERS OF ARTWORK MASTERS REQ'D PER THIS EN.

DOCUMENTS AFFECTED

DOCUMENT	REV. IS	REV. WAS	DOCUMENT	REV. IS	REV. WAS	REFERENCE DOCUMENTS
						RECO # 04484
97D0697	H	G	4000506	L	K	
9700698	G	F	4400593	G	F	
97D0699	G	F	44P0593	N	M	

DRAFTSMAN		CHECKER		PROJECT ENGR.		REL. MGR.		REVIEW BOARD
[signature]	8/9/73	[signature]	8/13/73	R.E. Hinson	8/14/73	[signature]	8/14/73	[signature]

EA 0013-060F

40.00506 - CONT'D

2. HOLE CHART, REVISE QTY FOR SYM A
15:1230, WAS: 1232

44.00598 - P/L - PROCESSOR CONTROL - DM337

1. UPDATE REV LETTER OF REF DWG'S PER THIS EN.

2. UPDATE REV LETTER OF FIND Nº 1 PER THIS EN.

3. DELETE FIND Nº 35, WAS: (QTY, -000, -001) 0, (PART Nº) 53A0647-200, (DES) WIRE, TEFLON, (REMARKS) 26 AWG

44.00623 - ASSY - PROCESSOR CONTROL - DM337

1. FIELD OF DWG, REMOVE JUMPER A-A
WAS:

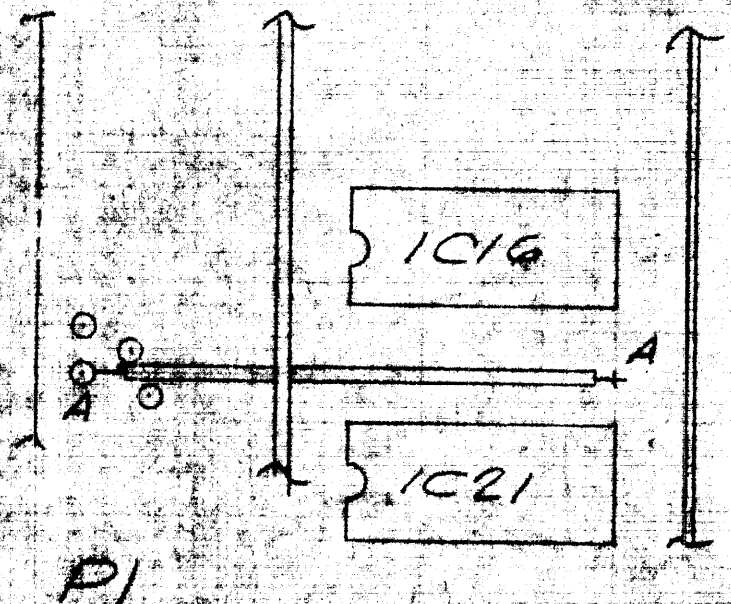

ENGINEERING NOTICE

varian data machines
a varian subsidiary

E.N. NO. 82044
PAGE 1 OF 5
ISSUE DATE 3-26-74

MODEL NUMBER	EFFECTIVE SERIAL	PARTS DISPOSITION			
620L-100	SEE BELOW *		USE AS IS		SCRAP
DEVICE PROC. CONT NO 2		X	REWORK SEE PG. 4		NOT APPLICABLE

TYPE OF INFORMATION

	DRAWING RELEASE	X	DRAWING CHANGE		RECORD CHANGE		SUBSTITUTION OR DEVIATION		STOP ORDER

REASON FOR ACTION
TO ENABLE THE 620L-100 TO PASS INSTRUCTION TEST NO. 2 BY ELIMINATING A DECODING SPIKE ON IAPX+

CHANGE CODE 1

OUTSTANDING CODE 1
ENS

~~ACTION TO BE TAKEN~~
* EFFECTIVE SERIAL

1.) SEE PAGE 5 FOR SER. NO. EFFECTIVITY

2.) ALL THOSE USED IN SYSTEMS THAT FAIL TO PASS MARGIN TESTS

ACTION TO BE TAKEN
(SEE PAGE 2)

3/25/74

DOCUMENTS AFFECTED

DOCUMENT	REV. IS	REV. WAS	DOCUMENT	REV. IS	REV. WAS	REFERENCE DOCUMENTS
9100360	C	B	4000509	E	D	ECO # 05220
4400596	F	E	9700706	C	B	ECO # 05140
4400596	C	B	9700707	E	D	
			9700708	C	B	

DRAFTSMAN		CHECKER		PROJECT ENGR.		RESP. MGR.		REVIEW BOARD
	3/24/74		3/21/74	R.E. Hannon	3/25/74		3/25/74	

95A 0013-000F

ENGINEERING NOTICE

varian data machines
a varian subsidiary

E.N. No. 82844
PAGE 2 OF 5

44P0596 P/L PROC. CONTROL NO. 2

1.) REVISE QTY AND REMARKS OF FIND NO. 4 (49A0008-000) QTY IS 5 WAS 4, REMARKS ADD IC49

2.) UPDATE REVISION LETTER OF REFERENCE DRAWINGS AND FIND NO. 1 PER THIS E.N.

9700706 ARTWORK DM340
9700708 SOLDERMASK DM340
9700707 SILKSCREEN DM340

1.) UPDATE PER CHANGES TO LOGIC DIAGRAM 91D0360

4DD0509 P.W. BOARD DM340

1.) REVISE F/D TO AGREE WITH CHANGES TO 97D0706

2.) UPDATE REVISION LETTERS OF "ARTWORK MASTERS REQUIRED" PER THIS E.N.

44D0596 PROC CONTROL NO. 2 ASSY

1.) ADD IC49 TO F/D

FORM 96A0013-001

ENGINEERING NOTICE

varian data machines
a varian subsidiary

E.N. No. 82844
PAGE 3 OF 5

91D0360-LOGIC-PROC. CONTROL Nº2

1. SHEET 1, ZONE C1, REVISE AS FOLLOWS:

IS:

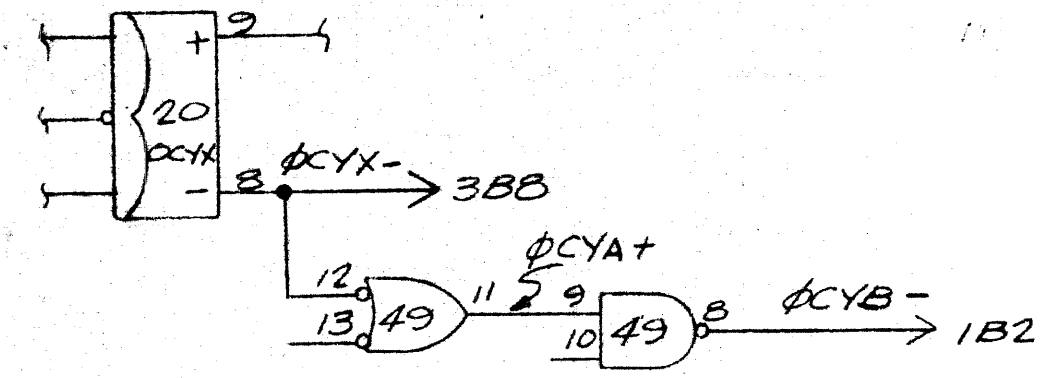

WAS:

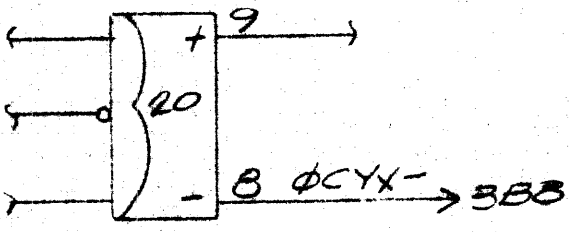

ZONE B2

IS:

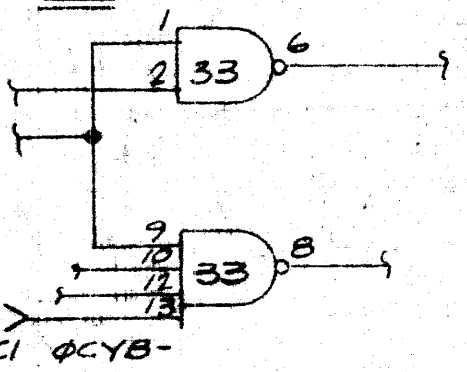

WAS:

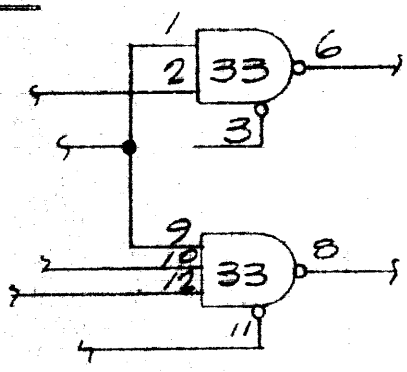

2. UPDATE REF DES LAST USED BLOCK;
IS: 1C49, WAS 1C48

FORM 3600013-001C

ENGINEERING NOTICE

varian data machines
a varian subsidiary

REWORK INSTRUCTIONS

E.N. No. 82994
PAGE 4 OF 5

Reidentify the following revision letters by stamping an "X" over the old revision letter and restamping the new revision letter next to the "X".

Revision Is:	Revision Was:
44P0596-000 F	44P0596-000 E

1.) INSTALL IC49, VDM P/N 49A0008-000 IN SPARE IC LOCATION AS SHOWN BELOW

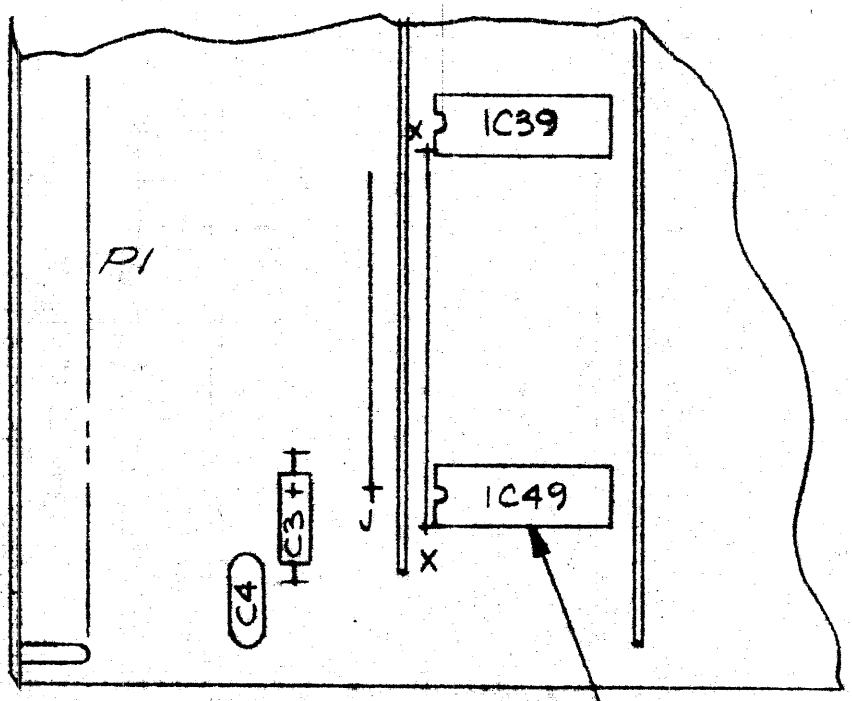

44P0596-000 COMPONENT SIDE

ADD IC (49A0008-000)

2.) ADD THE FOLLOWING JUMPERS TO COMP. SIDE USING WIRE, 53A0701-000, 30 AWG

FROM	TO
IC49-8	IC33-13
IC49-9	IC49-11
IC49-12	IC20-8

FORM 9A0013-01

ENGINEERING NOTICE

varian data machines
a varian subsidiary

E. N. No. 82844
PAGE 5 OF 5

SERIAL NO. EFFECTIVITY

44P0596-000 SER. NO. 1566 AND ON.

S/N 1166 THRU 1169,
1200
1201
1202
1210
1211
1215
1219
1220
1223
1225
1228
1236
S/N 1243 THRU 1337
S/N 1339 THRU 1359
S/N 1361 THRU 1368
1372
1386
1388
1389
1390
1394
1395
1396
1398
1400
1403
1407
1411
1413
1414
1422
1432
1438
1439
1444
1445
S/N 1451 THRU 1485
1526
1528
1529
1532
1533
1534
1536
1540
1544
S/N 1547 THRU 1550
1554
1557
1559
1561
1565