Operation and maintenance manua

Model 1510

INCREMENTAL MAGNETIC TAPE RECORDER

KENNEDY CO.
540 WEST WOODBURY ROAD, ALTADENA, CALIFORNIA

Model 1510

INCREMENTAL MAGNETIC TAPE RECORDER

TABLE OF CONTENTS

Section I
General Information

Section II
Performance Specifications

Section III
Checkout and Installation

Section IV
Operation

Section V
Maintenance

Section VI
Mechanical

Section VII
Electrical

Section VIII
Plug-in Modules

Section IX
Spare Parts

Modifications
Appendix
Glossary of Terms

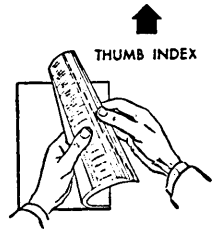

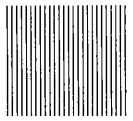

SECTION I

GENERAL INFORMATION

SECTION I

GENERAL INFORMATION

PRINCIPLES OF OPERATION

Kennedy Incremental Recorders prepare IBM compatible tape from sources of data operating at random or non-standard rates. This means that tapes recorded can be mounted on standard computer tape drives and read as though they had been written by the computer itself.

All the characteristics of computer written tape are duplicated. Data characters are evenly spaced as required by the computer, parity bits are generated internally and properly placed on tape and gaps of standard lengths are inserted on command.

Incremental recorders are capable of producing evenly spaced data even though the data source may be operating in a sporadic or random manner. Continuous, or start-stop tape drives, cannot do this without use of a large and costly memory.

As an example, consider the problem of recording the output of an electric typewriter operated manually. Keys are struck with variable rapidity and if the recording tape were in smooth motion, the variability would result in uneven spacing on the tape. Even if the operator were capable of absolutely consistent typing, time for carriage return would differ from key stroke time.

In an incremental recorder, each character is recorded upon command. The tape then steps one increment--which may be 0.005" for 200 BPI; 0.0018" for 556 BPI; or 0.0012" for 800 BPI--then stops and awaits the next step command, thus the data is evenly recorded assuming that the maximum asynchronous stepping rate of the recorder has not been exceeded. The incremental recorder has numerous advantages over other methods of performing this function:

1. The recorder is an inexpensive device because tape speeds are very low.

2. No expensive memory is required.

3. The recorder is mechanically simple with almost no moving parts to fail--highly reliable.

4. Tapes produced are immediately usable on computers without conversion.

Stepping Mechanism

The heart of the incremental recorder is its stepping mechanism which must be accurate and reliable. Not only must its step size be accurate, but there must be no possibility that the step is not accurately transmitted to the tape itself. When the drive is stationary, as

it may be for long periods of time, there must be no possibility that the tape may creep or otherwise move.

All these requirements together with the obvious requirement for high asynchronous stepping rates are met by the stepper motor drive used in Kennedy Incremental Recorders. The stepping motor itself is a special ultra-high speed, variable reluctance motor which moves 15° per step. Each position of the motor is strongly detented magnetically. This 15° step motion is reduced through precision gearing to the proper angular motion to advance the tape the required increment.

Tape is driven by a capstan and pinch roller in such a way as to make slippage a virtual impossibility at any speed.

The drive mechanisms on all standard Kennedy Incremental Recorders are identical--the only variation being in step size as determined by gear ratio and capstan diameter.

Electronics

Ease of application has been the primary consideration in design of the recorder interface. Internally, recorder electronics are all solid state, silicon. Integrated circuits are used in all appropriate applications.

INCREMENTAL RECORDING SYSTEMS

A block diagram is shown in Figure 1-1 of a typical Kennedy Incremental Recorder illustrating its principal components. It will be noted that electronics may be divided into sections having inter-related but separate functions.

1. Parity-Write Amplifier section produces the actual recording on tape.

2. Gap generation system develops the drive signals necessary to insert gaps.

3. Control section provides circuits operable by pushbuttons and remote signals to control tape motion.

4. Stepper drive system receives step commands and produces signals which cause the stepper motor to increment.

Each of these sections will be shown in detail in this book.

In addition to the basic system shown, there are other functions which may be added for special purposes. They do not basically alter the system but add to its complexity.

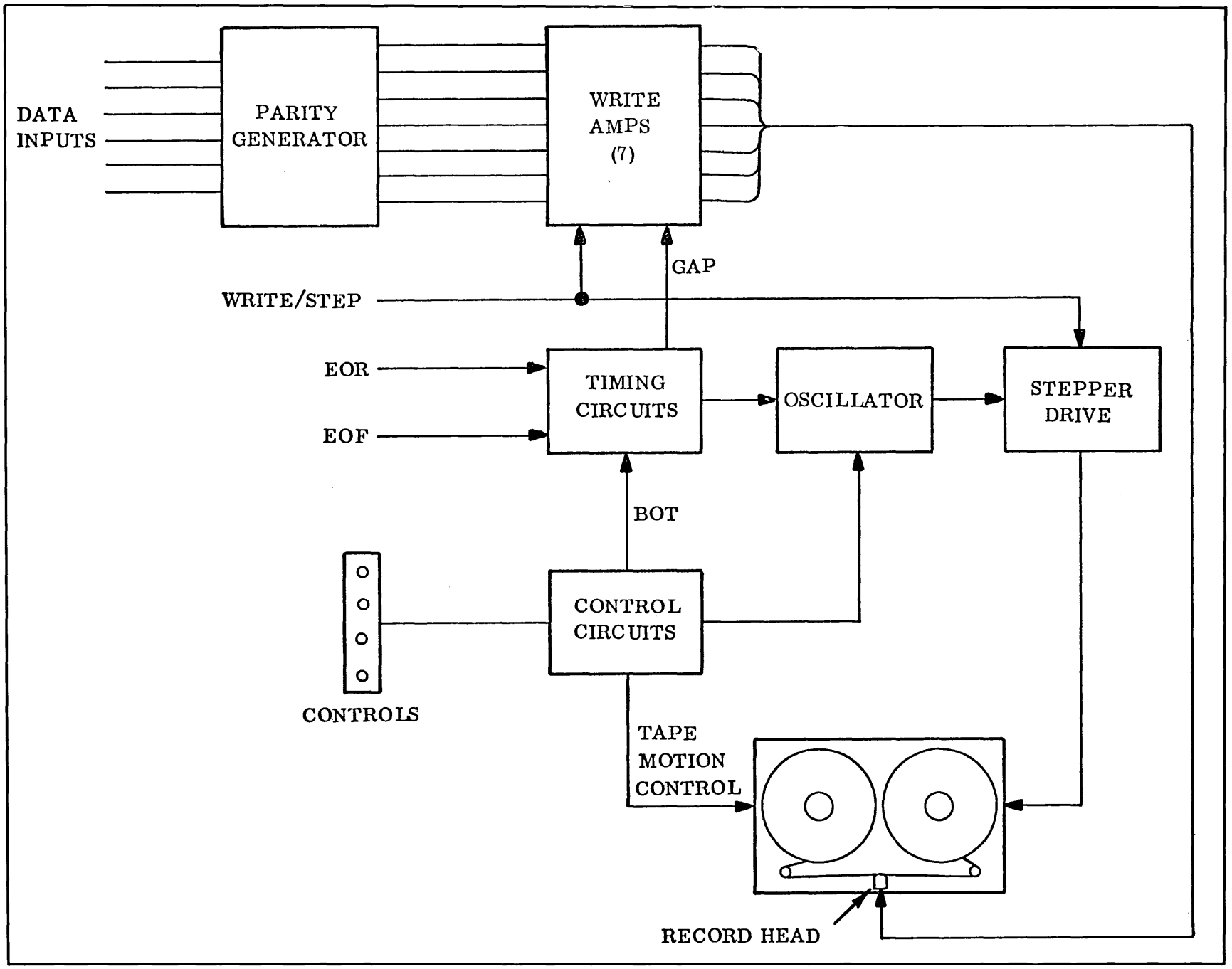

Figure 1-1. Incremental Recording System

DIGITAL MAGNETIC RECORDING

To record digital data on magnetic tape it is necessary, in some way, to magnetize the tape discretely to indicate binary ones and zeros. Of several different schemes, the IBM NRZI system has been most widely adopted. As shown in Figure 1-2, ones are represented by transitions between saturation magnetism (+ and -) on the tape.

Since magnetic heads respond to the rate of change of flux but not to steady flux, when tape is read output waveforms, such as those shown in Figure 1-2, are produced. No change in flux represents a binary zero and no voltage is recovered from the head.

In order to be usable as a recording scheme, the NRZI system requires at least one bit to be recorded for all characters; otherwise, in an all zero character there would be no indication that a character was supposed to be in that location.

NRZI recording is implemented by driving current through the head winding in a direction determined by a flip-flop which toggles for each one to be recorded.

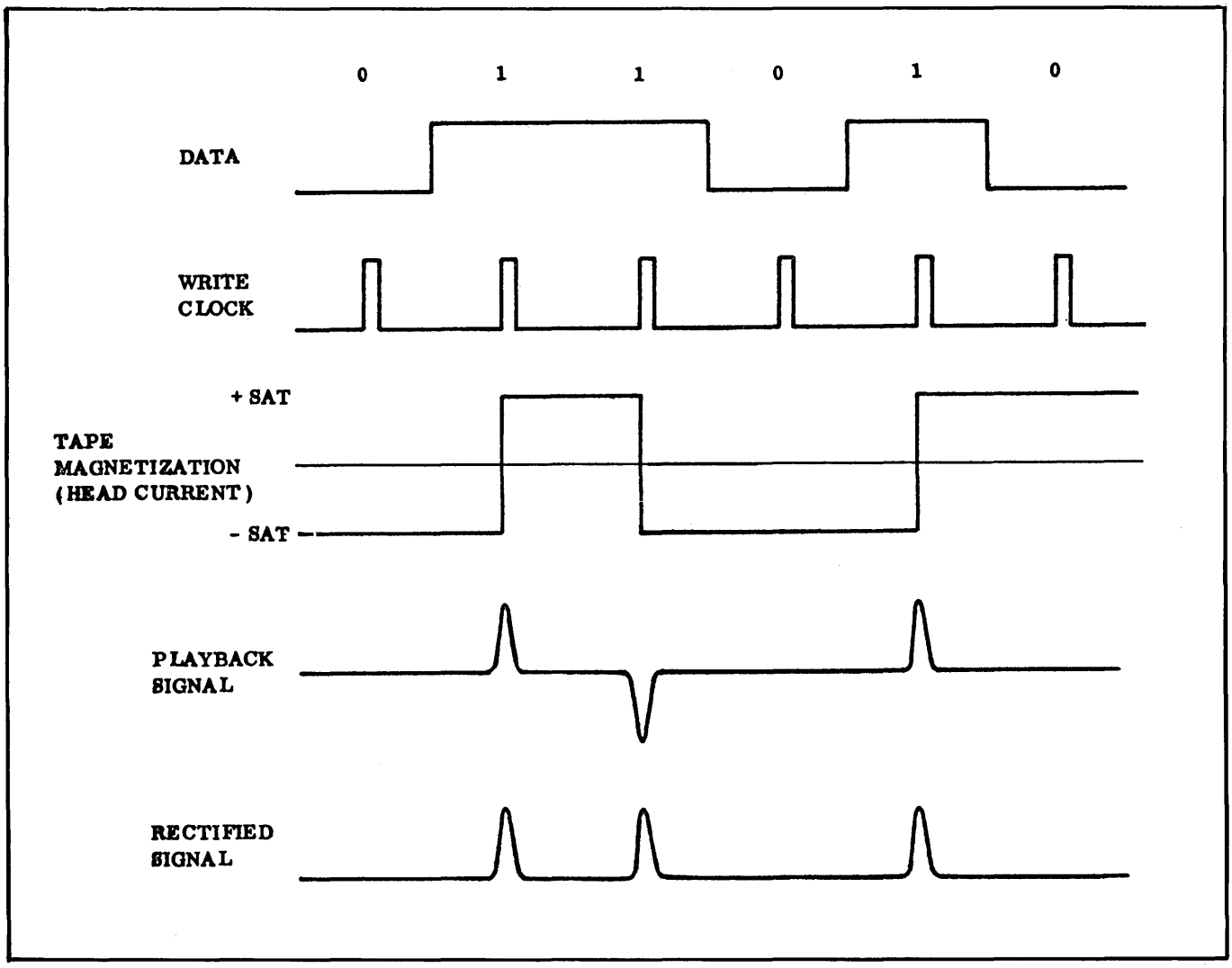

Figure 1-2. NRZ Waveforms

In a seven-track system, as shown in Figure 1-3, six of the tracks are data channels while the seventh is the parity channel. Parity may be either odd or even which is to say that bits may be added in the C track to make the sum of the bits in the character either odd or even. Even parity is used with BCD coding while odd parity is used when operating in the binary mode.

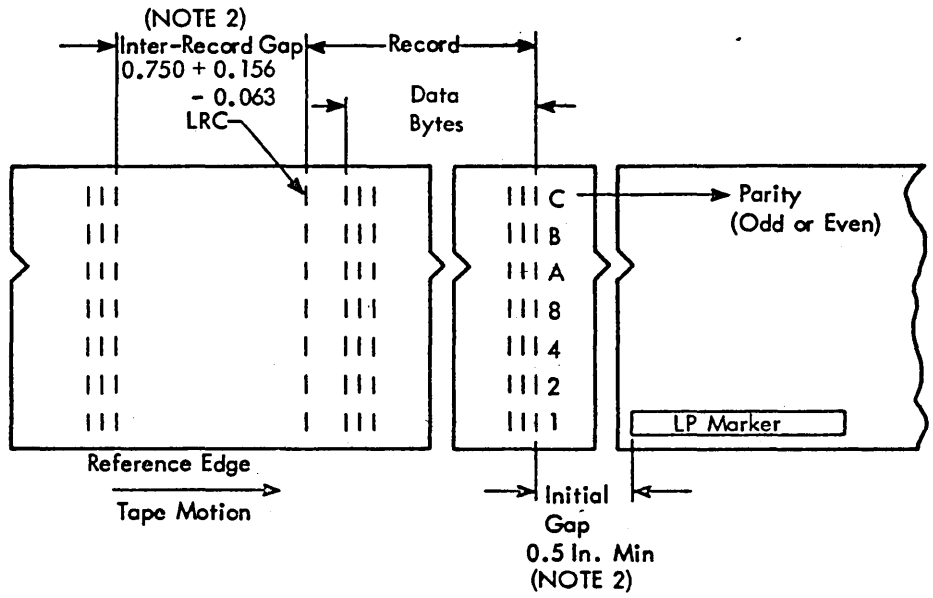

NOTES:
1. Tape is shown with oxide side down. NRZI recording. Bit produced by reversal of flux polarity. Tape fully saturated in each direction.
2. Tape to be fully saturated in the erased direction in the initial gap and the inter-record gap. Erasure such that an N seeking end of compass will point to start of tape.
3. LRC - Longitudinal redundancy check character - odd or even-spaced four bits from data character.
4. Parity Bit - A vertical parity bit is written for each character.
5. Must conform to all 729 specifications.

Figure 1-3. Data Format - Seven Track

BCD

IBM seven-channel BCD code is shown in Figure 1-4. It will be noted that there are 63 combinations of the 6-data bits available to stand for numerics, letters, and special symbols. Actually, a somewhat larger variety of symbols may be used, depending upon the print chain, by leaving out some unused symbols and substituting others.

Collating Sequence	Graphics		Eight - Bit Code								BCD					
	8 Bit	BCD	0	1	2	3	4	5	6	7	B	A	8	4	2	1
00	blank	blank	0	1	0	0	0	0	0	0	0	0	0	0	0	0
01	.	.	0	1	0	0	1	0	1	1	1	1	1	0	1	1
02	←	↑	0	1	0	0	1	1	0	0	1	1	1	1	0	0
03	(	[	0	1	0	0	1	1	0	1	1	1	1	1	0	1
04	+	<	0	1	0	0	1	1	1	0	1	1	1	1	1	0
05	GM	GM	0	1	0	0	1	1	1	1	1	1	1	1	1	1
06	&	&	0	1	0	1	0	0	0	0	1	1	0	0	0	0
07	$	$	0	1	0	1	1	0	1	1	1	0	1	0	1	1
08	*	*	0	1	0	1	1	1	0	0	1	0	1	1	0	0
09	)	]	0	1	0	1	1	1	0	1	1	0	1	1	0	1
10	;	;	0	1	0	1	1	1	1	0	1	0	1	1	1	0
11	MC	MC	0	1	0	1	1	1	1	1	1	0	1	1	1	1
12	-	-	0	1	1	0	0	0	0	0	1	0	0	0	0	0
13	/	/	0	1	1	0	0	0	0	1	0	1	0	0	0	1
14	,	,	0	1	1	0	1	0	1	1	0	1	1	0	1	1
15	%	%(	0	1	1	0	1	1	0	0	0	1	1	1	0	0
16	WS	WS	0	1	1	0	1	1	0	1	0	1	1	1	0	1
17	↑	\	0	1	1	0	1	1	1	0	0	1	1	1	1	0
18	SM	SM	0	1	1	0	1	1	1	1	0	1	1	1	1	1
19	ъ	ъ	0	1	1	1	1	0	1	0	0	1	0	0	0	0
20	#	#=	0	1	1	1	1	0	1	1	0	0	1	0	1	1
21	@	@'	0	1	1	1	1	1	0	0	0	0	1	1	0	0
22	∇	:	0	1	1	1	1	1	0	1	0	0	1	1	0	1
23	=	>	0	1	1	1	1	1	1	0	0	0	1	1	1	0
24	TM	TM	0	1	1	1	1	1	1	1	0	0	1	1	1	1
25	ð	ð	1	1	0	0	0	0	0	0	1	1	1	0	1	0
26	A	A	1	1	0	0	0	0	0	1	1	1	0	0	0	1
27	B	B	1	1	0	0	0	0	1	0	1	1	0	0	1	0
28	C	C	1	1	0	0	0	0	1	1	1	1	0	0	1	1
29	D	D	1	1	0	0	0	1	0	0	1	1	0	1	0	0
30	E	E	1	1	0	0	0	1	0	1	1	1	0	1	0	1
31	F	F	1	1	0	0	0	1	1	0	1	1	0	1	1	0
32	G	G	1	1	0	0	0	1	1	1	1	1	0	1	1	1
33	H	H	1	1	0	0	1	0	0	0	1	1	1	0	0	0
34	I	I	1	1	0	0	1	0	0	1	1	1	1	0	0	1
35	õ	õ	1	1	0	1	0	0	0	0	1	0	1	0	1	0
36	J	J	1	1	0	1	0	0	0	1	1	0	0	0	0	1
37	K	K	1	1	0	1	0	0	1	0	1	0	0	0	1	0
38	L	L	1	1	0	1	0	0	1	1	1	0	0	0	1	1
39	M	M	1	1	0	1	0	1	0	0	1	0	0	1	0	0
40	N	N	1	1	0	1	0	1	0	1	1	0	0	1	0	1
41	O	O	1	1	0	1	0	1	1	0	1	0	0	1	1	0
42	P	P	1	1	0	1	0	1	1	1	1	0	0	1	1	1
43	Q	Q	1	1	0	1	1	0	0	0	1	0	1	0	0	0
44	R	R	1	1	0	1	1	0	0	1	1	0	1	0	0	1
45	RM	RM	1	1	1	0	0	0	0	0	0	1	1	0	1	0
46	S	S	1	1	1	0	0	0	1	0	0	1	0	0	1	0
47	T	T	1	1	1	0	0	0	1	1	0	1	0	0	1	1
48	U	U	1	1	1	0	0	1	0	0	0	1	0	1	0	0
49	V	V	1	1	1	0	0	1	0	1	0	1	0	1	0	1
50	W	W	1	1	1	0	0	1	1	0	0	1	0	1	1	0
51	X	X	1	1	1	0	0	1	1	1	0	1	0	1	1	1
52	Y	Y	1	1	1	0	1	0	0	0	0	1	1	0	0	0
53	Z	Z	1	1	1	0	1	0	0	1	0	1	1	0	0	1
54	0	0	1	1	1	1	0	0	0	0	0	0	1	0	1	0
55	1	1	1	1	1	1	0	0	0	1	0	0	0	0	0	1
56	2	2	1	1	1	1	0	0	1	0	0	0	0	0	1	0
57	3	3	1	1	1	1	0	0	1	1	0	0	0	0	1	1
58	4	4	1	1	1	1	0	1	0	0	0	0	0	1	0	0
59	5	5	1	1	1	1	0	1	0	1	0	0	0	1	0	1
60	6	6	1	1	1	1	0	1	1	0	0	0	0	1	1	0
61	7	7	1	1	1	1	0	1	1	1	0	0	0	1	1	1
62	8	8	1	1	1	1	1	0	0	0	0	0	1	0	0	0
63	9	9	1	1	1	1	1	0	0	1	0	0	1	0	0	1

Figure 1-4. Eight Bit Code - BCD Relations

Binary Mode

In the binary mode, the computer is programmed to accept tape characters as binary numbers. This mode obviously is useful only with straight numeric input.

Thus, a six-bit character can represent a six-digit binary number, or 0-63. By using more than one character, larger numbers may be represented. In some cases this results in considerable saving in space on the tape and in computer time. For example, the number 56 would require two character spaces in BCD but only one in binary. Obviously, odd parity must be used because six zeros can be a perfectly valid portion of a binary number.

Nine-track Coding

Nine-track tape, as used in IBM System/360, uses a modified ASCII code also shown in Figure 1-5. Parity in the nine-track 800 BPI system is always odd.

Operation in binary mode is possible with proper programming. An interesting possibility is recording two 4-bit numerics per byte with consequent doubling of effective data rate.

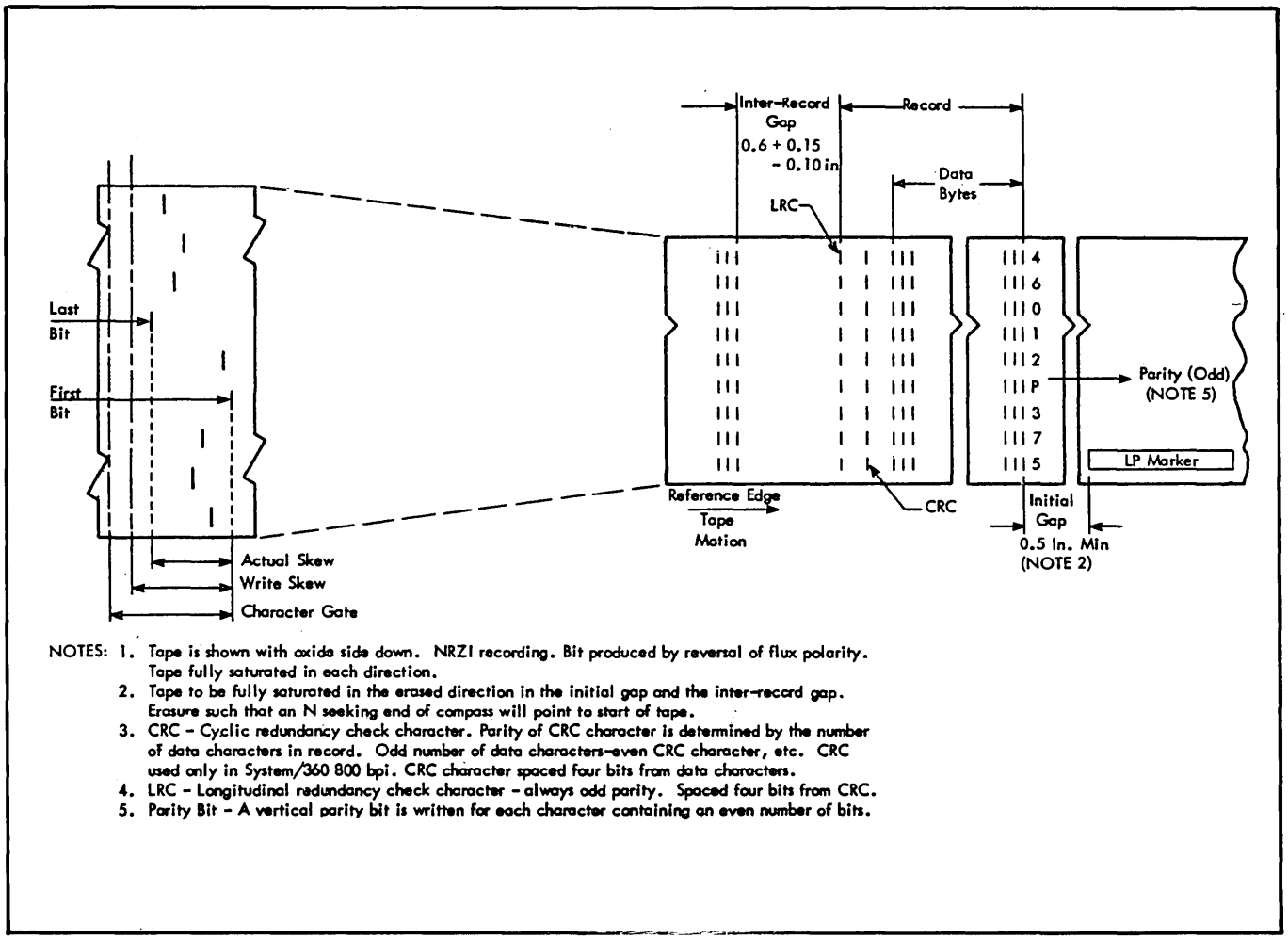

NOTES:
1. Tape is shown with oxide side down. NRZI recording. Bit produced by reversal of flux polarity. Tape fully saturated in each direction.
2. Tape to be fully saturated in the erased direction in the initial gap and the inter-record gap. Erasure such that an N seeking end of compass will point to start of tape.
3. CRC - Cyclic redundancy check character. Parity of CRC character is determined by the number of data characters in record. Odd number of data characters-even CRC character, etc. CRC used only in System/360 800 bpi. CRC character spaced four bits from data characters.
4. LRC - Longitudinal redundancy check character - always odd parity. Spaced four bits from CRC.
5. Parity Bit - A vertical parity bit is written for each character containing an even number of bits.

Figure 1-5. Data Format - Nine Track

Longitudinal Parity

In writing blocks on tape, it is necessary to return to the reference magnetic condition in the gaps if records are to be rewritten at any future time. Otherwise, the direction for any track would not be known and spurious characters would result. In returning to reference state those tracks which are in the opposite state, spurious characters are also generated. This difficulty has been cleverly converted to an asset in the NRZI system by accurately locating the "spurious" character and using it as a check.

Since it started and returned to reference level, each track must have had an even number of transitions. The number of transitions are counted and if the result is odd, an error is indicated.

The Longitudinal Check Character, as it is called, is spaced four or five character spaces from the end of the block so that it will not be interpreted as data.

Other Checks

In the newer IBM transports built for 800 BPI, nine-track recording, another check, called "Cyclic Redundancy Check", is included. This check has the ability to direct correction of a certain limited class of errors. Kennedy Incremental Recorders built for System 360 compatibility include circuits for generation of the CRC.

Additionally, in the nine-track system there is a "Lost Character Check" which implements the error correction routine. In this check a character is expected to have been read within 15 clock times of the last. If it has not been read in 17 clock times, an error is flagged.

This requirement places fairly stringent criteria on character spacing accuracy. While not used in the seven-track 2400 series transport, lost character detection circuits are retained placing the same restrictions on spacing as in the nine-track system.

FLUX CHECK™

Flux Check™ is a system of checking data as it is written on tape. A true read-after-write check, it uses only one gap for both operations. If a character is incorrectly written for any reason, including tape flaws, an error signal is produced before another character is due to be written.

Available as an option on nearly all Kennedy Incremental Recorders, Flux Check™ is the ultimate safeguard against lost data.

While it may be argued with perfect logic that good tape operating in a good machine will not have any errors recorded on it, the human factor cannot be entirely eliminated, and once precious data is lost it may be impossible to replace.

Basic principles of Flux Check™ recording are shown in Figure 1-6. Magnetically neutral tape is passed over the head which is built with a 0.006" gap--wider than the widest increment, 0.005" at 200 BPI. The head has two windings, a write winding and a read winding. Short pulses of current in the head magnetize a portion of the tape as wide as the gap. Polarity of the pulses is controlled by a flip-flop in the Flux Check™ Write Amplifier.

If zeros are being recorded, pulses are all in the same direction. This produces smooth magnetism on the tape as required for zeros. Polarity of write pulses reverses for ones. After writing, the tape moves, pulling the recorded section out of the gap and inducing a signal in the read windings.

Write pulses are suppressed by the Flux Check™ read amplifiers; but the read signal is amplified and compared on a bit-by-bit basis with the input data. If disagreement is found, an error is signalled.

Time to signal an error does not exceed 1.9 ms. This allows for a maximum operating speed of 500 steps per second, still retaining the ability to locate an erroneous character before the next is recorded.

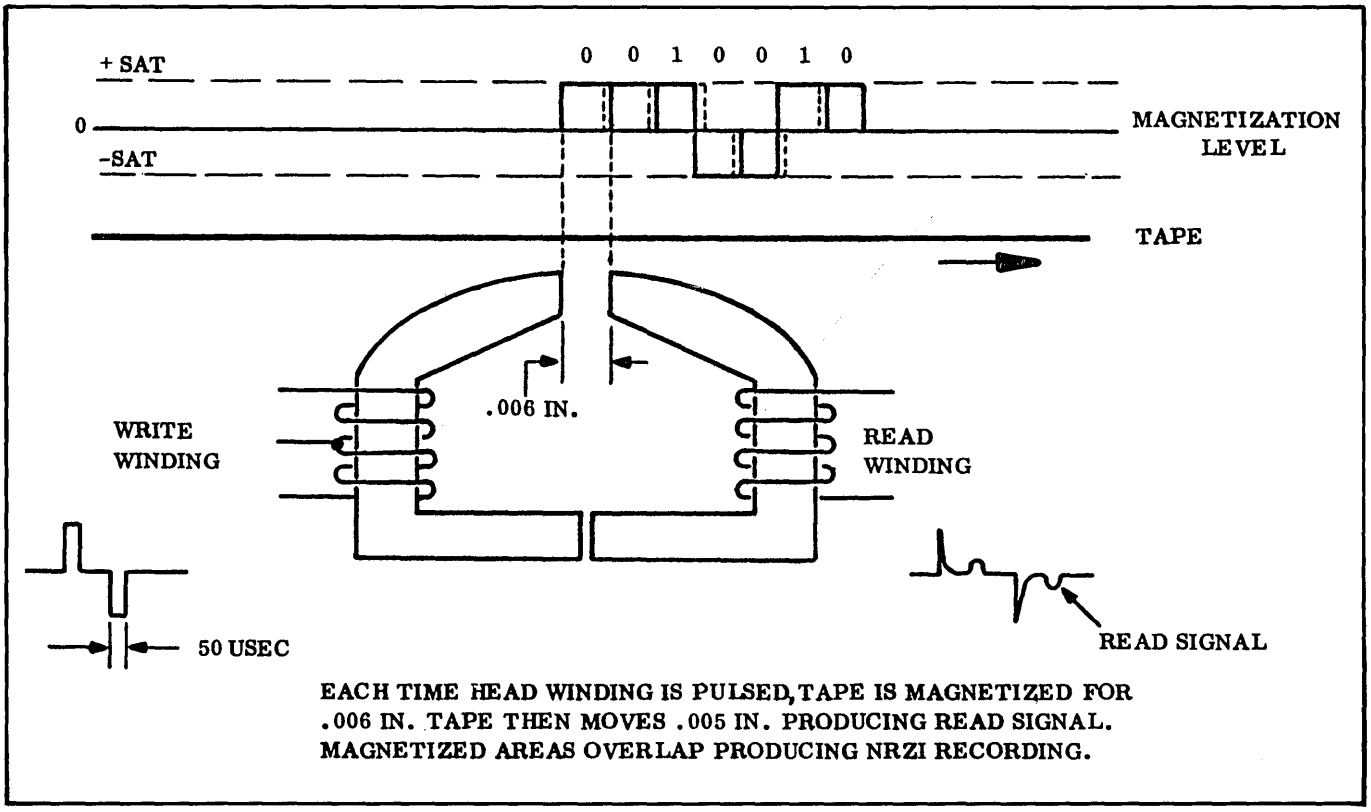

Figure 1-6. Flux Check Recording

READERS

Kennedy Company Incremental Magnetic Recorders may also be equipped for reading as well as writing tape. Model numbers are suffixed by designation as shown in the following examples:

1600R	Incremental Record/Continuous Read
1600IR	Incremental Record/Incremental Read
2059RO	Continuous Read Only

Principles and equipment requirements for the various models are identical or similar and, in many cases, the read portion of the machine is modular to simplify interfacing and construction.

The description in this section is general in nature. Specifics for a particular model may be found in the Performance Specifications section and in the circuit descriptions of the circuit cards used.

File Protect Switch

Kennedy recorders equipped for both reading and writing are also equipped with a File Protect Switch and Indicator Light. This switch detects the presence of the File Protect Ring in the reel of tape mounted on the supply side of the machine. If this flexible ring is removed from the reel, it indicates that the tape must not be written on under any circumstances. This treatment is often reserved for library and program tapes or, in some instances, the ring may be removed immediately after the tape is written to prevent erasure of a tape.

On a machine so equipped it is impossible to select the Write mode in the machine or to write or erase data on tape when the File Protect Ring has been removed from the reel. If an attempt is made to write on a tape which does not have the File Protect Ring in place, the red FILE PROTECT Light will glow either immediately or when the machine goes into Ready, depending on the model, to indicate to the operator that he has made a procedural error. An indication of this is also provided to the interface plug so that external equipment may sense this condition. Machines which are Write Only or Read Only do not have a File Protect Switch.

Controls and Loading Procedure

The controls and loading procedure for a Read machine are identical to those of a Write Only machine. However, when the tape is loaded, no Beginning of Tape gap is inserted. The read head will come to a stop at a point prior to the place where recording began. In other words, it will stop immediately when the Load Point sensor is under the photo cell instead of the customary 3-1/2" after this point.

Interface Connector

On all recent Kennedy Incremental Recorders a separate interface connector is provided for the functions associated with reading. This enables a machine equipped for reading to be directly substituted for a Write Only machine using the same wiring. The read signals do not compromise or affect the normal signals on the connector associated with writing.

Skew Delay

In writing a tape certain tolerances with regard to the gap scatter in the heads, the skew of the head (that is, the failure of the gaps to be absolutely perpendicular to the tape), and other causes can accumulate in tolerances which make it necessary to provide electronic circuitry to compensate for these variables and to assure that the output data is timed correctly. These conditions are aggravated when a tape is written on one machine and read on another which is a normal circumstance. The common method for achieving this is to read each track independently and sense the first "one" that is detected on any track. This is done by connecting the outputs of all of the data tracks into an "OR" gate. The first "one" then triggers a delay which is usually set to be approximately 45% of the prescribed time for one character.

At this time the data in the output register is changed to reflect the new character, and a few microseconds later a Clock pulse is provided to enable strobing this data into the external system. This assures that data is transferred at a time when it is valid and correct and eases the interfacing of the machine to an external system. (On old machines the output register was not provided, and Data pulses and Clock pulses were coincident with each other.)

Gap Detector

Another output provided at the interface connector is the Gap Detector output. In either Incremental Read or Continuous Read machines a Clock pulse should be detected within a prescribed time after a Read/Step or Read command is given. Internal circuitry has been provided to detect whether or not this clock is available within approximately two or three time intervals. If no clock is received within this time, then it follows that the read head must be passing through a gap. This output is called the Gap Detect output and may be used to control stopping of a Continuous machine in the gap.

Longitudinal Check Character

This Gap Detect output is also used internally to inhibit the Clock pulse for the Longitudinal Check Character. The Longitudinal Check Character will appear at the data output terminals and will remain there during the gap until the first character of the succeeding block is detected. However, the Clock pulse for it is deliberately inhibited since, in most simplified systems where a reader of this type is employed, the character is not desired. Where it is required, it may be reconstituted by a simple modification to one of the circuit cards. The factory should be consulted regarding this if it is required.

Error Rates

Maximum error rates are difficult to define. Many variables, such as tape condition, environment, etc., enter the picture. Continuous reading with error rates of less than one error in 10^6 characters is reasonable to expect under ordinary conditions and may be improved several orders of magnitude with reasonable precautions. Incremental reading is much more difficult to implement and is less tolerant of tape imperfections. Therefore, typical error rates may be expected to be slightly higher.

CONTINUOUS READING

On machines equipped for Continuous reading, the tape is run at a fixed speed and should be stopped only in Inter-Record gaps. In most recorders this is done by running the stepper motor at a slewing rate fast enough so that the steps blend together into a smooth continuous motion. This speed is usually 1000 steps per second.

On some machines, such as the 3700 Series, an auxiliary capstan motor is employed to run the tape at a pre-selected speed of up to 30 inches per second. Other machines, such as the 2059 Series, use a servo controlled dc motor system which allows pre-selected tape speeds of 1.5 inches to 6 inches per second. All of these systems have in common the fact that:

1. the tape is running at a pre-selected fixed speed,

2. a data register is filled at a synchronous rate,

3. a Read Clock output is provided to enable strobing out the register into memory or other external devices.

The control of these recorders is relatively simple. A Read Select level is applied followed by a Slew level which will cause the tape to accelerate rapidly to the prescribed speed and run continuously at that speed emitting Data and Clock pulses. When a gap is detected, a signal is available which may be used to control the slew level which should be removed to enable the tape to stop in the desired gap.

INCREMENTAL READING

The Incremental Read feature permits reading of 200 BPI NRZI tapes one character at a time. Standard computer tapes may be read into such low speed devices as typewriters, data sets, plotters, etc. without the necessity of buffering. In operation the machine is given a Read/Step command. The tape advances to the next character (read search) and stops upon having read that character. Output information is held in storage until the next Read/Step command. Read commands may be repeated at rates up to 150 characters per second.

In order to read incrementally, a means must be provided to assure orientation with the information on the tape. The motion of the tape must be such that the head gap falls between characters when the tape comes to a stop. A step size equal to the character spacing cannot be used since density and step size variations will eventually accumulate to a point where information could be lost.

Kennedy Incremental Recorders use a unique method of correcting tape position. The step size, instead of being 0.005" as it is in Incremental Write Only machines, is set at 0.0025". Thus, two steps will be required to move the tape one character space under ideal conditions. However, since magnetic tape does not have sprockets or other mechanical means to assure that the tape is between characters over the recorder gap, a technique is required which will assure that the tape always stops between characters and that it takes the correct number of steps to assure this. While two steps are usually required, one may be adequate or perhaps

three may be necessary. To achieve this an internal oscillator is started when the Read/Step pulse is applied at the interface. The stepper motor then advances the tape. As soon as a character is sensed, the oscillator is cut off and no more pulses are produced and the motor stops. In this way a closed loop system is produced which keeps the tape properly oriented.

Upon entering a blank region of tape, that is, an Inter-Record gap or End of File gap, the stepper drive will advance as many steps as may be required to reach the next character. A Read/Stop input is provided at the interface to allow stopping this action at the end of data on the tape.

It is also possible to apply a level instead of a series of pulses to the Write/Step input which allows reading a tape in a continuous fashion at an average rate higher than 150 characters per second. Reading rate is then approximately 300 characters per second. Use of this mode is somewhat more complex than the standard Incremental Read, and the factory should be consulted for details of operation in this mode.

Since the stepper motor and gear box must be arranged to provide two steps per character in the Incremental Read mode, it follows that the same unit being used in the Write mode requires that two steps be taken for each character written. This is automatically provided for internally so that each Write/Step results in a character on the tape with the proper 0.005" spacing. However, this does restrict the upper speed of the writing to 300 characters per second, and the high speed option is thus not available on machines equipped to incrementally read.

SECTION II

PERFORMANCE SPECIFICATIONS

SECTION II

MODEL 1510

PERFORMANCE SPECIFICATIONS

GENERAL SPECIFICATIONS

TAPE USED	0.5" wide, 1.5 mil thick computer tape
TAPE FORMAT	7-track NRZI
TAPE REELS	Up to 10.5-inch diameter, IBM compatible
TAPES COMPATIBLE WITH	IBM 729 and 2400 Series tape transports
WRITE MODE	
Recording Speed Incremental	0-300 characters per second (0-500 characters per second, special order)
Continuous	1000 characters per second (nominal)
Density	200 BPI or 556 BPI (specify)
RECORD GAP TIME	175 milliseconds (maximum) (200 BPI) 470 milliseconds (maximum) (556 BPI)
SLEW RATE	1000 characters per second (nominal) (5 ips at 200 BPI) (1.8 ips at 556 BPI)
REWIND TIME	Less than 4 minutes

OPERATOR CONTROLS AND INDICATORS

All front panel controls (except AC POWER Switch) are duplicated by logic inputs at Write Interface connector P1.

AC POWER Switch

Applies power to the tape unit, presets the control circuits, places dc braking voltage across the reel motors, and illuminates green power indicator.

LOAD FORWARD Pushbutton With Indicator

Automatically advances the tape to the Load Point marker during a loading operation and generates a Beginning of Tape (BOT) Gap (see below) when the Load Point marker is sensed.

After the loading operation, pressing this button causes tape to be advanced at 1000 characters per second. Indicator illuminates when the button is first pressed and remains lit until the automatic stop following a Rewind operation. The indicator also goes out if Broken Tape is sensed.

READY Indicator With Pushbutton

Indicator illuminates whenever the tape unit is in READY (ready to accept data). The push-button may be used to place the tape unit in READY by pressing it simultaneously with the LOAD FORWARD Pushbutton. This is an interlock to guard against inadvertently pushing this button. Since the tape unit automatically enters READY when the Load Point marker passes under the sensor assembly, this feature should be used only in the rare instances where no Load Point marker is present.

Note

Use of this feature will result in a BOT Gap (see below).

FILE GAP Pushbutton Only

Manually inserts the IBM File Gap (see below), File Mark, and IRG.

REWIND Pushbutton With Indicator

Drops the tape unit from READY and rewinds tape at high speed until the Load Point marker is sensed or until tape winds off the reel. In either case, stop is automatic.

INTERNAL CONTROLS AND FEATURES

Parity Generator

Lateral Parity is generated and written on Channel C. Odd or even parity may be selected through the interface.

Longitudinal Parity (the Longitudinal Check Character, or LCC) is written four character spaces after the last data character in a block. Its generation is part of the Inter-Record Gap and File Gap sequences.

Continuous (Slew) Operation

For applications requiring a higher data input rate, continuous writing at 1000 characters per second may be achieved with this recorder. In this mode, data is recorded in bursts, and all starts and stops take place in the IRG (see below).

The high speed is achieved by accelerating the motor beyond its normal asynchronous rate. Internally generated motor clock pulses are brought out to the interface for use as a system data clock. Thus, stepping and writing are exactly synchronized. Further details on this process will be found in the Operation section (Section IV) of this manual.

Gaps and Marks (Also See Figure 1-3, Data Format - Seven Track)

Inter-Record Gaps and File Gaps which are compatible with IBM format are generated automatically on command from the interface. File Gaps may also be automatically generated with a front panel control.

Inter-Record Gap (IRG)	3/4" IRG generated upon command from the interface. A properly spaced LCC is inserted as part of the gap timing sequence.
File Gap (EOF)	Standard 3-1/2" File Gap generated upon command from the interface or with a front panel control.
File Mark	Also called Tape Mark. Standard Binary 15 written automatically upon completion of the File Gap. The File Mark is followed automatically by a properly spaced File Mark Check Character (another Binary 15) and an additional 3/4" IRG.
Beginning of Tape Gap (BOT)	Also called Initial Gap. A 1/2" (minimum) BOT Gap is automatically inserted when the Load Point marker is sensed during a loading operation.

Tape Sensors

Load Point, End of Tape, and Broken Tape sensors are provided. Signals generated by the first two of these sensors are amplified and brought out to the interface connector. The Load Point sensor is used during a loading operation to generate a BOT Gap. It is also used to halt a Rewind operation.

The End of Tape sensor has no internal function. It provides a control signal to the external equipment when the End of Tape marker is under the sensor assembly.

The Broken Tape sensor halts all machine operations in the event of broken or missing tape at the sensor assembly.

INTERFACE CHARACTERISTICS

Model 1510 Standard Write interface is compatible with current sinking positive logic having a "one" level of +4V to +6V and a "zero" level of 0V ±0.5V. "Zero" levels should be capable of sinking 5 ma. All input functions except remote controls are initiated by "one" levels. Remote control inputs require closures to ground to be activated. Maximum current through the closure is 5 ma; open circuit voltage is +10V. This may be loaded or clamped to +5V (minimum) for use with IC logic.

Note

Because of the nature of DTL logic used in the tape unit, the following inputs must be tied to Signal Ground if they are not used: COUNT ENABLE, CONTROL COMMON, SLEW, EOF COMMAND, and EOR COMMAND. All P1 pins not assigned are reserved by Kennedy Company for future use and should not be used as tie points.

The P1 connector is P/N 121-5004-036 (Amphenol 57-40360 or equivalent). The mating connector (supplied) is P/N 121-5003-036 (Amphenol 57-30360 or equivalent).

Modified interfaces are available. Consult the factory.

Inputs

PULSES are to be a minimum of 20 usec long and a maximum of 100 usec long.

LEVELS are to be static at the time of the leading edge of the pulse which clocks them in. They must remain static for at least 50 usec thereafter.

CLOSURES TO GROUND are to be a minimum of 20 usec long and a maximum of 100 ms long.

DATA LINES	LEVEL	Channel 1	P1-18
		2	P1-19
		4	P1-17
		8	P1-20
		A	P1-21
		B	P1-16
WRITE/STEP Command	PULSE		P1-14
Clocks in information on data lines.			
EOR Command	PULSE		P1-30
Starts IRG sequence. Must be applied no sooner than trailing edge of final Write/Step Command.			
EOF Command	PULSE		P1-29
Starts File Gap sequence. Must be applied no sooner than trailing edge of final Write/Step Command. This function is duplicated by the File Gap front panel control.			
WRITE SELECT	LEVEL		P1-1
Enables Write mode when True and the tape unit is READY. Disables Write mode when False. In normal Write-Only operation this input should be tied directly to +5V or +6V.			

REMOTE LOAD FORWARD CLOSURE TO GROUND P1-2

Prepares tape unit for writing after tape has been loaded. Causes tape to feed at 1000 characters per second until Load Point marker is reached. BOT Gap is automatically generated at this point. This function is duplicated by the Load Forward front panel control.

REMOTE READY CLOSURE TO GROUND P1-3

Not normally used. Places machine in READY. This input should be used only in the rare instances where no Load Point marker is present on tape.

REMOTE REWIND CLOSURE TO GROUND P1-4

Drops READY and rewinds tape at high speed until the Load Point marker is sensed. To further rewind the tape off the reel for unloading, the tape unit must be placed in the Load Forward mode after the tape has stopped. Rewind may then be activated again to remove tape completely from the take-up reel. Rewind stops automatically when tape is completely wound on to the supply reel. This function is duplicated by the front panel Rewind control.

COUNT ENABLE LEVEL P1-6

Not used during incremental writing. During continuous writing at 1000 characters per second, a True level enables a four-count circuit which properly spaces the LCC from the final data character of a record. This level must be False at all other times to avoid writing errors on tape. Further details on the use of this input will be found in the Operation section (Section IV) of this manual.

CONTROL COMMON P1-7

Connect to Signal Ground to enable front panel pushbuttons. Buttons are disabled if this connection is not made.

SLEW LEVEL P1-8

Used during a continuous writing operation only. A True level activates an oscillator which gradually accelerates the stepping motor to 1000 steps per second. Outputs from this oscillator are brought to the interface (see below) for use in synchronizing the data inputs to the stepper motor pulses. Further details on the use of this input will be found in the Operation section (Section IV) of this manual.

REVERSE SELECT LEVEL P1-9
FORWARD SELECT LEVEL P1-10

Used in Read /Write models to control the direction of the stepper motor. It is sufficient to control the Forward Select input and leave the Reverse Select unconnected. A True Forward Select level causes the stepper motor to run forward. A False level causes the stepper motor to run backward.

CAUTION

In Write-Only models the Forward Select input should be tied directly to +5V or +6V to avoid driving tape backward and erasing it.

+6V P1-12

The internal +6V supply is brought to this pin for use as an external reference. Maximum external loading is 100 ma.

PARITY SELECT LEVEL P1-13

Controls the parity generation circuits so as to produce an odd or even vertical parity bit for input to the parity channel (Channel C) write amplifier. A True level produces even parity; a False level produces odd parity.

SIGNAL GROUND P1-11
CHASSIS (FRAME) GROUND P1-36

Signal Ground and Chassis Ground are not connected together within the tape unit. For best results, run these two lines separately to the Main System Ground and connect them together only at that point.

Outputs

P1 signal outputs are terminated in the tape unit through a source impedance of 1.5K (nominal), and are capable of sinking up to 10 ma of external load current. Levels are +6V ±1V True and 0V ±0.5V False. Outputs may be loaded or clamped to +3V (minimum).

READY LEVEL P1-27

Indicates that the loading process is complete and head current is flowing. Data may be recorded whenever this output is True and the Gap in Process output is False. This output is duplicated by the READY Indicator on the front panel.

GAP IN PROCESS LEVEL P1-28

Indicates that the tape unit is under the control of the gapping electronics and is inserting an IRG, End of File, or BOT Gap. The output includes a delay at the end of each gap for the tape unit to come to a stop. Writing should not be attempted while this level is True.

END OF TAPE LEVEL P1-5

Indicates that the End of Tape marker is under the sensor assembly. This function is not used internally.

WRITE ERROR LEVEL P1-24

Indicates that the Echo Check circuits have detected an error in the write electronics. Level will go True a maximum of 100 usec (0-300 character/second units) or 1.95 ms (0-500 character/second units) after the Write/Step Command has been given and will remain True until the next Write/Step Command is given.

OSCILLATOR OUT PULSE P1-26

Pulse duration 10 usec (minimum). Pulses from an internal oscillator, used primarily to drive the stepper motor at high speed during gapping operations, are brought out to this pin for use as a system clock in the Continuous Writing mode. Pulses are produced whenever the Slew input is applied or whenever the tape unit

is inserting a gap. Nominal rate is 1000 pulses per second; however, the motor must accelerate to this speed over a number of steps. Further details on the use of this output will be found in the Operation section (Section IV) of this manual.

Note

These pulses are used internally to drive the stepper motor during loading and gapping operations in either the Incremental or Continuous Writing mode. Therefore, they must be properly gated externally to avoid system errors when a loading or gapping operation is in progress.

LOAD POINT LEVEL P1-31

Indicates that the Load Point marker is under the sensor assembly. This function is used internally to generate a BOT Gap during a loading operation and to halt tape during a Rewind operation.

POWER REQUIREMENTS	117V ±10%, 50/60 Hz; 230V, 50/60 Hz selectable by switch. Power consumption: 125VA.
PHYSICAL CHARACTERISTICS	Panel 19 inches x 24-1/2 inches, fits standard rack. Depth behind panel: 10 inches. Weight: 65 lbs.

ENVIRONMENTAL

Operating Temperature	+2°C to +50°C (+35°F to +122°F)
Storage Temperature	-40°C to +75°C (-40°F to +167°F)
Storage Altitude	20,000 feet (maximum)
Relative Humidity	15% to 95%

Note

No condensation is allowed on any portion of the tape unit during operation. Any condensation accumulated during shipping and/or storage must be thoroughly removed before tape unit is operated. Tape manufacturers' specifications may impose more stringent environmental limitations than those given above. Consult tape supplier.

SECTION III

CHECKOUT AND INSTALLATION

SECTION III

CHECKOUT AND INSTALLATION

INTRODUCTION

This section contains information on unpacking, inspection, repacking, storage, and installation.

UNPACKING AND INSPECTION

If the shipping carton is damaged, ask that the carrier's agent be present when the recorder is unpacked. Inspect the recorder for damage (scratches, dents, broken knobs, etc.). If the recorder is damaged or fails to meet specifications, notify the carrier and Kennedy Company immediately. Retain the shipping carton and the padding material for the carrier's inspection. Kennedy Company will arrange for the repair or replacement of your recorder without waiting for the claim against the carrier to be settled.

STORAGE AND SHIPMENT

Packaging

To protect valuable electronic equipment during storage or shipment always use the best packaging methods available. Kennedy Company can provide packing material such as that used for original factory packaging. Contract packaging companies in many cities can provide dependable custom packaging on short notice. Here are a few recommended packaging methods:

Rubberized Hair: Cover painted surfaces of recorder with protective wrapping paper. Pack recorder securely in strong corrugated container (350 lbs./sq. in. bursting test) with 2-inch rubberized hair pads placed along all surfaces of the recorder. Insert fillers between pads and container to ensure a snug fit.

Excelsior: Cover painted surfaces of recorder with protective wrapping paper. Pack recorder in strong corrugated container (350 lbs./sq. in. bursting test) with a layer of excelsior about 6 inches thick packed firmly against all surfaces of the recorder.

Environment

Conditions during storage and shipment should normally be limited as follows:

a. Maximum altitude: 20,000 feet
b. Minimum temperature: -40°F (-40°C)
c. Maximum temperature: 167°F (75°C)

Shipping Frame

Some Kennedy Company recorders are shipped in steel frames for protection. This frame fits snugly inside the shipping carton. Remove unit and frame from box. The frame is suitable for holding the machine in an upright position during initial handling and checkout.

RACK MOUNTING

Rack mounting slots are accessible with the recorder door open. If desired for greater ease of access, the door may be removed during mounting and replaced when the machine is in place.

Appropriate washers under mounting screw heads will prevent damage to painted surfaces of the panel.

POWER CONNECTION

A 3-wire detachable power cable is supplied with each machine. Exposed portions of the machine are grounded for safety. When only a 2-blade outlet is available, use connector adapter and ground the short wire from the side of the adapter.

Before plugging in to a 230V main, be sure the machine is wired for 230V operation. 230V wiring will be indicated by a prominent stamp near the power connector.

SECTION IV

OPERATION

SECTION IV

OPERATION

INTRODUCTION

In order to operate the recorder properly it is necessary to have it connected to a suitable interface. This is particularly true in the case of machines with DTL logic; they will not operate unless inputs specified to be zero are connected to ground.

It is assumed in the following that suitable preparations have been made and the machine is in an operable condition.

TAPE LOADING

1. With power off, place a full reel on the supply hub as shown in Figure 4-1.
2. Thread tape along tape path as shown in Figure 4-1 to the take-up reel.
3. Holding end of tape with a finger, wrap a few turns around the take-up reel.
4. Turn power on.

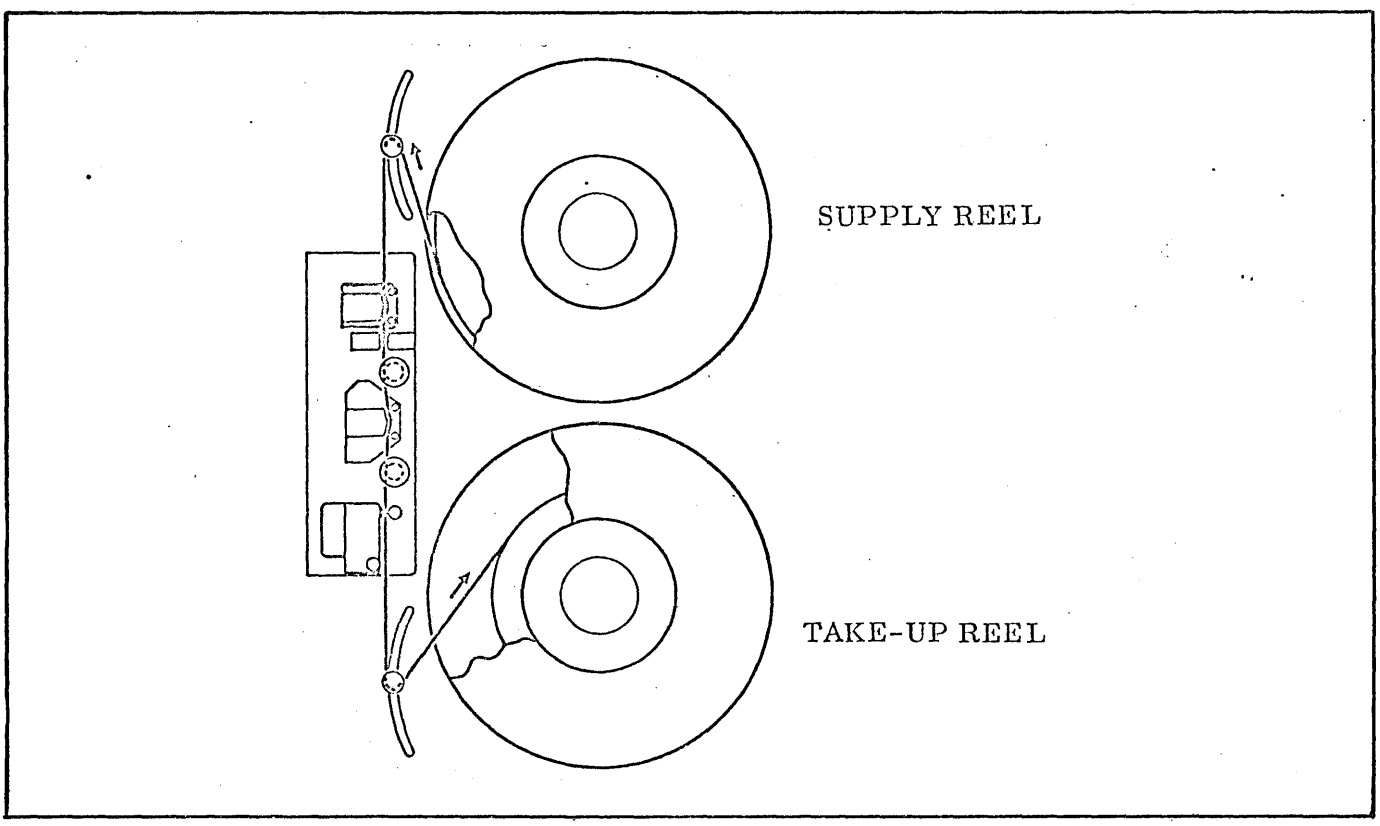

Figure 4-1. Tape Threading Diagram

5. Press LOAD FORWARD Pushbutton. Servos will energize and pinch roller will engage. Tape now advances automatically to the Load Point Marker and in Write mode will insert Beginning of Tape Gap and stop.

6. READY light comes on and machine is now prepared to accept data.

INCREMENTAL WRITING

1. Feed a series of data inputs and Write/Step Commands to the interface connector, observing the proper relative timing requirements for these inputs. Input rate must not exceed that shown in the Performance Specifications.

2. At intervals, determined solely by system requirements, an IRG must be inserted. At these times, apply an EOR Command to the interface. Be sure to observe the timing requirements with respect to the final Write/Step Command of the record.

3. At the end of a job, or at other times determined by system requirements, an EOF Gap must be inserted. This can be done by applying the appropriate command to the interface or by pressing the FILE MARK Pushbutton on the front panel.

Note

In the case of systems which apply an IRG at the end of each record, no improper formatting results from following the last IRG of a job with an EOF Command; however, the separate EOR Command is not required.

CONTINUOUS WRITING AT 1000 CHARACTERS PER SECOND

1. Writing in this mode is usually more complex than in the Incremental mode, since writing must be done in bursts, with starting and stopping taking place only in IRG or EOF Gaps. This normally requires the use of an external buffer (memory).

2. In the Continuous Writing mode, the stepper motor is accelerated beyond its normal asynchronous rate to 1000 steps per second (nominal) by using an internal oscillator. This oscillator is normally used to move tape forward during a loading operation, during gap sequences in the Incremental mode, and (in Read/Write models) during a Continuous Read operation. To properly space data on the tape, the same pulses which drive the stepper motor are brought out to the interface for use as a system data clock.

3. Two methods are available to record data in this mode. The preferred method is explained first, the alternate method second.

a. Refer to Figure 4-2, Timing Diagram (Preferred Method)

b. Connect the Count Enable input to Signal Ground. It will not be used in this mode.

c. Load tape as specified above.

d. Apply a Slew input to the interface. Use an external circuit to gate out Oscillator Out pulses appearing during the first 50 ms after applying the Slew input. This allows the stepper motor to accelerate properly.

e. After the first 50 ms, route the Oscillator Out pulses through the system to apply data inputs and Write/Step Commands to the interface. The relative timing requirements of these inputs remain the same as for Incremental Writing.

f. After writing the required number of characters, use the trailing edge of the Oscillator Out pulse corresponding to the final character to generate an EOR Command input. The Oscillator Out pulse immediately <u>following</u> that used to write the final data character may be used instead, as long as the total system propagation time between the Oscillator Out pulse and the EOR Command does not exceed 2 usec.

g. Use the resulting Gap in Process Output to inhibit the system and to inhibit the data and Write/Step Command inputs to the tape unit.

h. If it is desired to stop after the IRG, the Slew input may be dropped any time up to 10 ms after the Gap in Process Output goes True. In this case, the system must wait 50 ms when the Slew input is reapplied.

i. If writing is to continue immediately following the IRG, the Slew input need not be dropped. Writing may begin again as soon as the Gap in Process Output goes False.

Note

The Gap in Process Output is independent of the Oscillator Out pulses. If this method is used, provision should be made in the system so that a portion of an Oscillator Out pulse is not applied as a Write/Step Command if the Gap in Process Output should fall during the time of an Oscillator Out pulse.

j. This process may continue as long as required. During the final IRG of the job, drop the Slew input. When the Gap in Process Output goes False, enter an EOF Gap with the front panel pushbutton or through the interface. As an alternate, the system may apply an EOF Command in place of the final EOR Command.

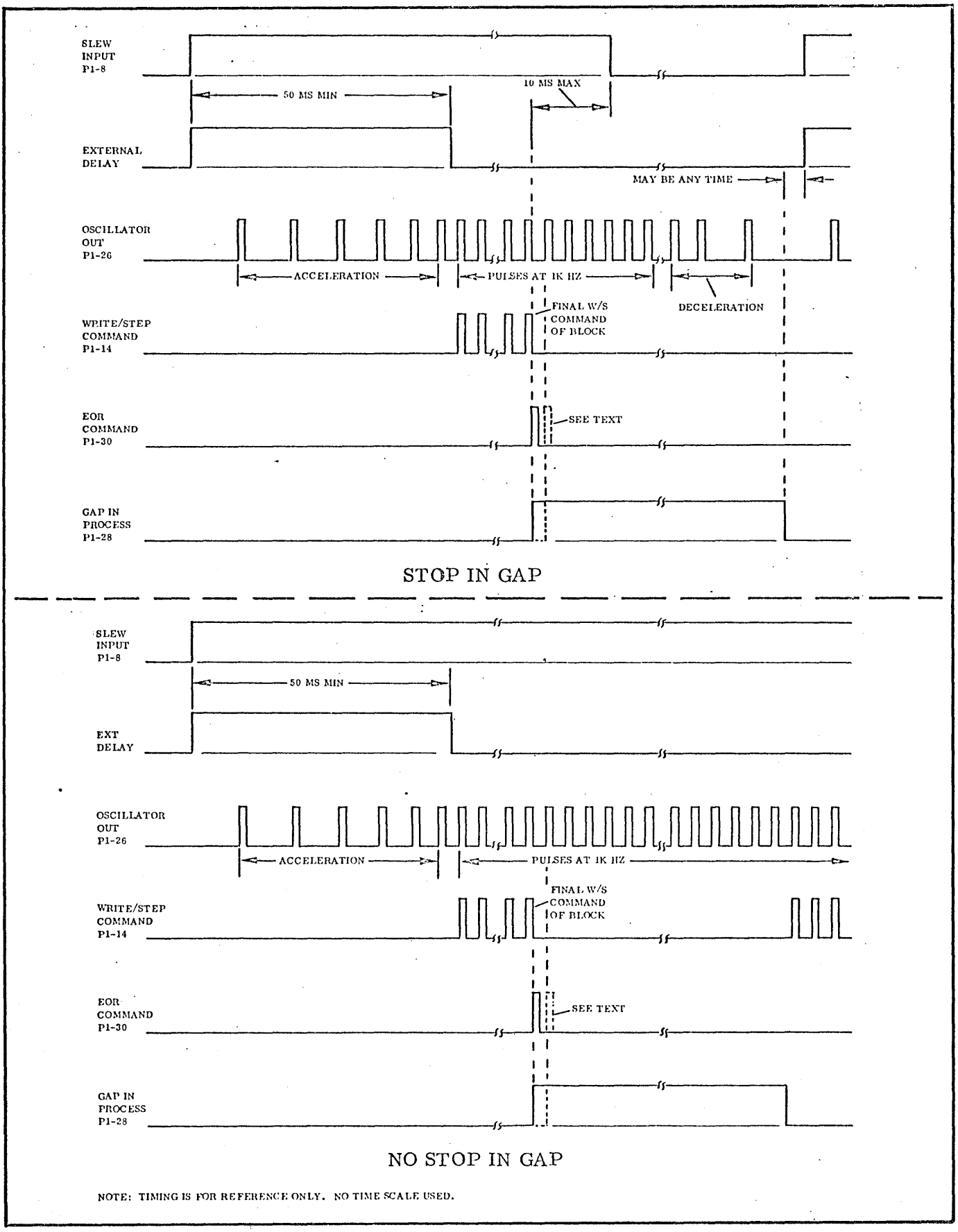

Figure 4-2. Timing Diagram (Preferred Method)

4. Alternate Method

   a. This method is available as Modification #M-115. It should be specified at the time the order is placed, but it is also feasible as a field modification.

   b. Modification #M-115 can be used only in seven-channel tape units. In nine-channel System 360 compatible units the preferred method must be used due to limitations imposed by the CRCC circuits.

   c. This method is similar to the preferred method, except that it uses the Count Enable input and does not use the EOR Command input. Gap timing must be done external to the tape unit, and the Gap in Process output remains False.

INCREMENTAL/CONTINUOUS WRITING

Data can be entered in both the Incremental and Continuous mode on the same tape. The transition from either mode to the other must take place following an IRG and with the stepper motor stopped. Then follow the appropriate instructions above.

REWIND

1. Press REWIND Pushbutton. Tape will rewind until Load Point marker is sensed and then stop. Rewind cannot be stopped (except by turning off power) once initiated. This is to prevent partial rewinding and subsequent possible destruction of data.

2. After tape has stopped it may be removed by manually completing the rewind with power off or by pressing LOAD FORWARD quickly, followed by pressing REWIND. Tape will then wind completely out of the machine and the reels will stop.

CAUTION

To avoid tape damage, always wait at least one second after the Load Point marker is sensed before activating any machine function. This allows the tape to stop completely.

SECTION V

MAINTENANCE

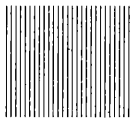

SECTION V

MAINTENANCE

ROUTINE MAINTENANCE

Primarily, routine maintenance consists of keeping mechanical parts clean. At regular intervals, depending in length upon use of machine and cleanliness of machine environment, the following steps should be taken:

1. Clean head surface and entire guide plate area with soft cloth and a mild organic solvent such as IBM head cleaner.

2. Clean surface of pinch roller to remove accumulation of oxide with a similar solvent.

3. Remove any accumulation of dust within the main cover and on the panel.

It should be kept in mind that while incremental recorders are very reliable devices and can operate under conditions more adverse than high speed computer tape transports, dirt is always a major source of difficulty and potential error. The tape path must be kept as clean as possible.

All bearings in the machine are lubricated for life. No further lubrication should be attempted since ball bearing lubrication can be destroyed by oil.

CHECKOUT AND ADJUSTMENT PROCEDURE

Relatively few adjustments are required on Kennedy Incremental Recorders. These can be divided into two classes, mechanical adjustments and electrical adjustments. Electrical adjustments, if any, will be found in Sections VI and VII. Mechanical adjustment procedures are given below.

Mechanical Adjustments

Tension Arm Adjustment: Two tape tension arms are provided for sensing tape tension and providing a buffer loop to allow free tape motion. Tension arms are coupled to potentiometers which control reel motor torque to maintain tension constant. Adjustments required are:

1. Tension Arm Return Force (Ref. Figure 5-1)

   Tension arms are spring loaded to provide proper tape tension. To set tape tension:

a. Swing arm to approximate center of arc.

b. Measure return force at the end of the arm with a spring scale.

c. Adjust anchor lug position for a spring scale reading of 4 oz. (113 gm). This setting will establish 2 oz. of tape tension.

2. Servo Potentiometer Angular Position (See Figure 5-1)

Tension arm is coupled to servo potentiometer by a shaft clamp. Potentiometer shaft extends through the panel and is slotted to accept a screwdriver. Servo potentiometer must be positioned to give proper motor torque.

a. Loosen shaft clamp lock screw until potentiometer shaft may be rotated with a screwdriver but still is snug enough to be rotated by tension arm. Press LOAD FORWARD pushbutton.

b. Hold tension arm in approximate center of arc. Turn potentiometer shaft until torque produced by reel servo drops to zero.

c. Tighten clamp lock screw.

d. With tape in place energize servos. Note position assumed by tension arm. If not close to center of arc, re-adjust potentiometer shaft to correct.

Note

Potentiometer shafts are accessible only with reels removed.

3. Tape Path Location

Tension arm rollers establish approximate tape path. To assure no skew is introduced this path must conform closely to guide path. To adjust:

a. Loosen lock nuts on roller shafts (Figure 5-1).

b. Measure height of rear edge of tape (closest to panel) at the guide plate. Tape should clear guide plate surface by 0.437" (1.72 cm) ±0.005" (0.127 mm), and be parallel to guide plate surface throughout its length.

c. Adjust roller screw for correct tape height.

d. Lock roller screw with lock nut.

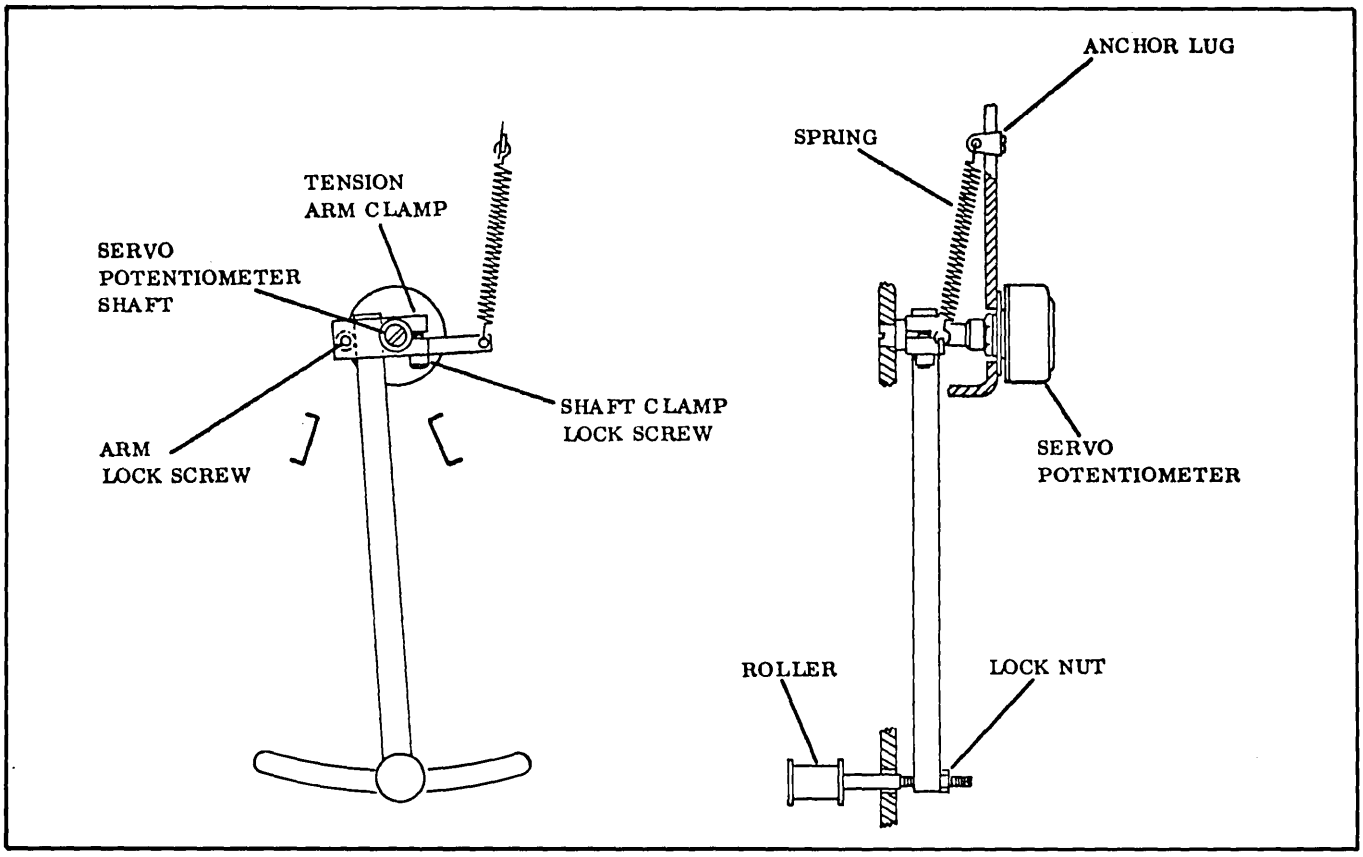

Figure 5-1. Tension Arm Adjustments

4. Capstan Drive Gear Mesh

Adjustment of Capstan Drive Gear Mesh is accomplished by rotating the stepper motor in its eccentric mounting. This adjustment should not be attempted unless there is strong reason to believe it is required. Gears are properly meshed when units leave the factory and should not require re-adjustment over long periods.

Mesh adjustment cannot be measured directly; it must be accomplished by feel. With power off:

a. Loosen three clamp screws holding motor in place.

b. Rotate motor clockwise (from rear) to tighten mesh.

c. Rotate capstan shaft as motor is rotated to detect zero backlash setting.

d. Lock motor in place and check again for zero backlash and free rotation. It should be possible to rotate motor from the capstan without difficulty.

e. If necessary, repeat procedure until zero backlash with free rotation is achieved. In the proper setting a slight "toothy" feel will be noticed.

5. Pinch Roller Adjustment (Figure 5-2)

Two criteria must be met in adjusting pinch rollers: frictional force must be sufficient to drive tape adequately and pinch roller must be parallel to the capstan in order to pull the tape straight. To adjust parallelism:

a. With power applied to pinch roller or holding solenoid in energized position, adjust roller height adjusting screw until roller does not touch capstan.

b. Turn screw one-quarter turn more.

c. Lock with Loctite grade H.

Pressure should now be properly set. Check tape pull as follows:

a. Prepare a length of tape about two feet long.

b. Feed tape through guides and over head, through pinch roller/capstan.

c. Attach a spring scale to tape and press LOAD FORWARD button. Hold tape back until it slips at the drive.

d. Spring scale should read at least 6 oz. (170 gm). If not, rotate screw slightly and re-measure. Be sure pinch roller is well cleaned before adjusting.

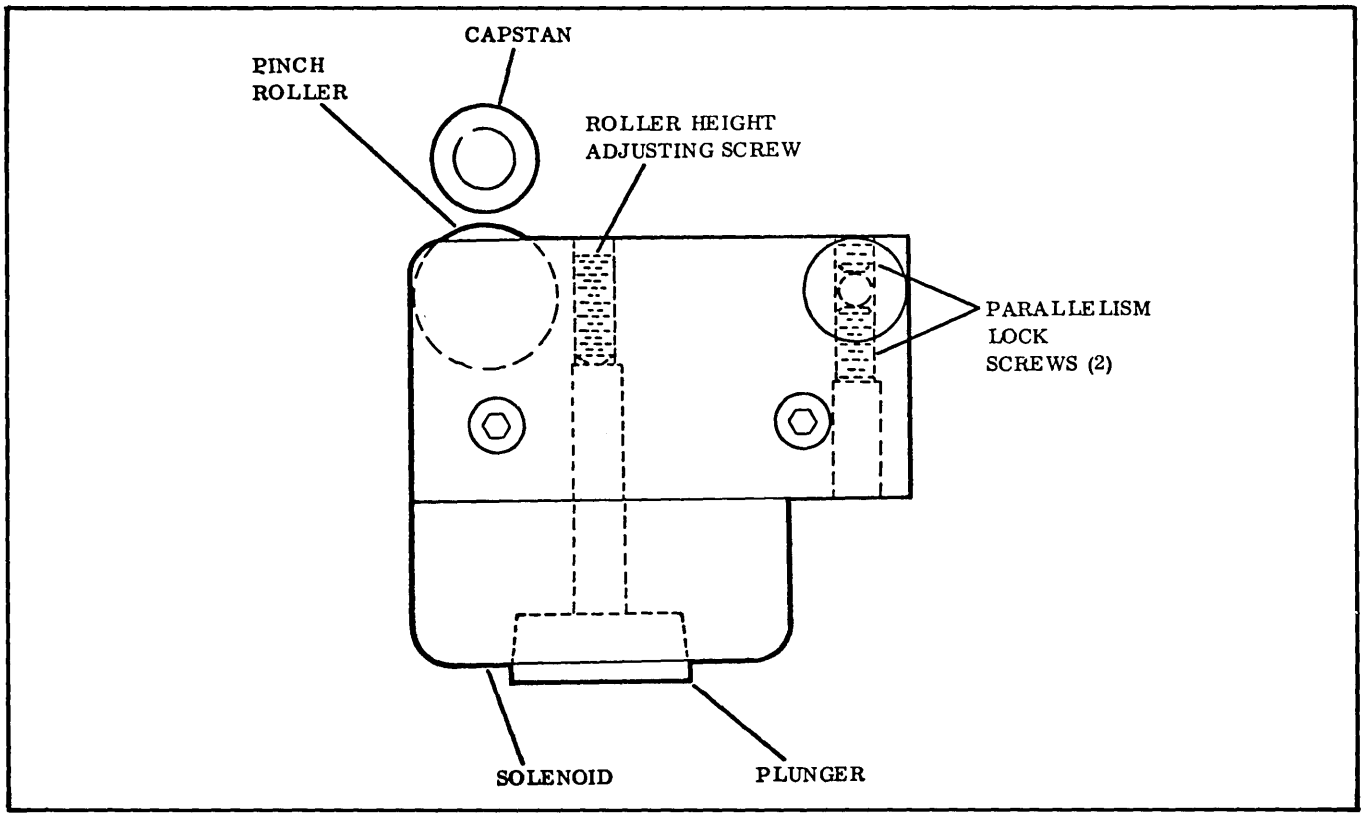

Figure 5-2. Pinch Roller Adjustments

Final parallelism adjustment is now made:

a. Using a length of tape, say, three feet long (about one meter), feed through machine as above.

b. Press LOAD FORWARD and observe tape motion. Tape should pull evenly through pinch roller/capstan with no tendency to skew either in or out.

c. If tape does not pull straight, re-adjust parallelism screws until straight motion is obtained. Tape will tend to move toward the tight side of engagement.

d. Lock screws in place and apply Loctite grade H.

e. Re-check as above after locking.

REPLACEMENT OF PARTS

In the event of damage to the machine, parts not normally expected to be replaced might require maintenance. The following discussion describes procedures for maintenance under these circumstances.

1. Servo Potentiometer Replacement

   a. Remove potentiometer by removing two screws holding potentiometer mounting plate. Remember to loosen shaft clamp screw in tension arm clamp.

   b. Mount new potentiometer with lugs in same approximate location of old unit.

   c. Return potentiometer and mounting plate to assembly replacing tension arm.

   d. Return mounting screws. Be sure potentiometer shaft rotates freely after screws are tightened.

   e. Go through adjustment procedure as outlined above.

2. Tension Roller

   Under extreme circumstances shaft of tension arm roller may be bent. In this case it requires replacement.

   a. Remove old roller together with shaft.

   b. Install new roller and shaft.

   c. Adjust as previously described in step 3.

3. Pinch Roller

After long service the pinch roller may become worn and require replacement. To replace pinch roller:

a. Remove assembly from mounting surface by removing screws (item 1, Figure 5-3).

b. Remove pin (item 2) by means of a small hook formed from stiff wire.

c. Lift pinch roller yoke (item 3) clear of housing (item 4).

d. Remove retaining ring (item 5) from front of shaft.

e. Remove shaft (item 6) from rear of assembly, freeing pinch roller (item 7).

f. Replace pinch roller and re-assemble.

g. Re-adjust pinch roller as previously described in step 5.

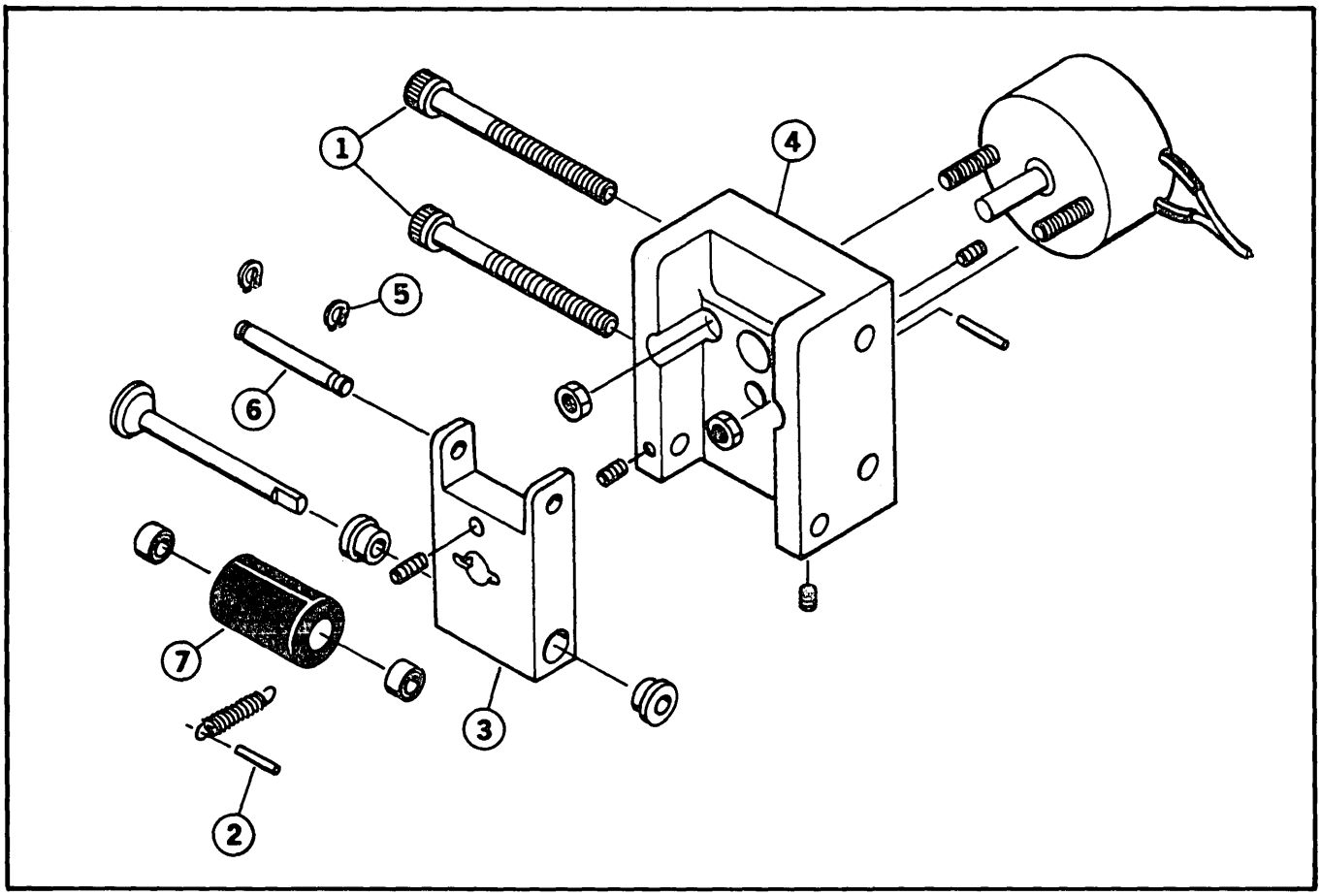

Figure 5-3. Pinch Roller Replacement

4. Capstan Assembly

In the event that through wear or other cause the capstan assembly needs replacement:

a. Remove old assembly by removing wires from terminal block and removing two mounting screws from front side of panel.

b. Replace with new assembly. Bearing must seat in counterbore on reverse side of mounting plate.

c. Re-adjust pinch roller (as previously described in step 5). Repair of capstan assemblies in the field is not advised. Return used assembly together with complete information to factory for credit.

5. Reel Hub Grip Ring (Figure 5-4)

A rubber ring is used as an expansion ring to hold the tape reel in place. If it should require replacement, simply pry old ring off without disassembling hub and snap new ring in its place.

6. Guides

If a guide becomes worn, it is usually adequate to simply loosen its mounting screw, turn the guide a few degrees, and re-tighten.

If complete replacement is desired, remove screw and guide. Replace with new guide; no adjustment is required.

7. Magnetic Head

Heads have very long life at speeds encountered in incremental recorders. If replacement is required:

a. Unplug head.

b. Remove two mounting screws.

c. Pass connector through hole in panel and remove head.

d. Replace with new head.

No adjustment of heads is possible or required. Return head to factory with complete details of cause for replacement. In some cases credit will be issued.

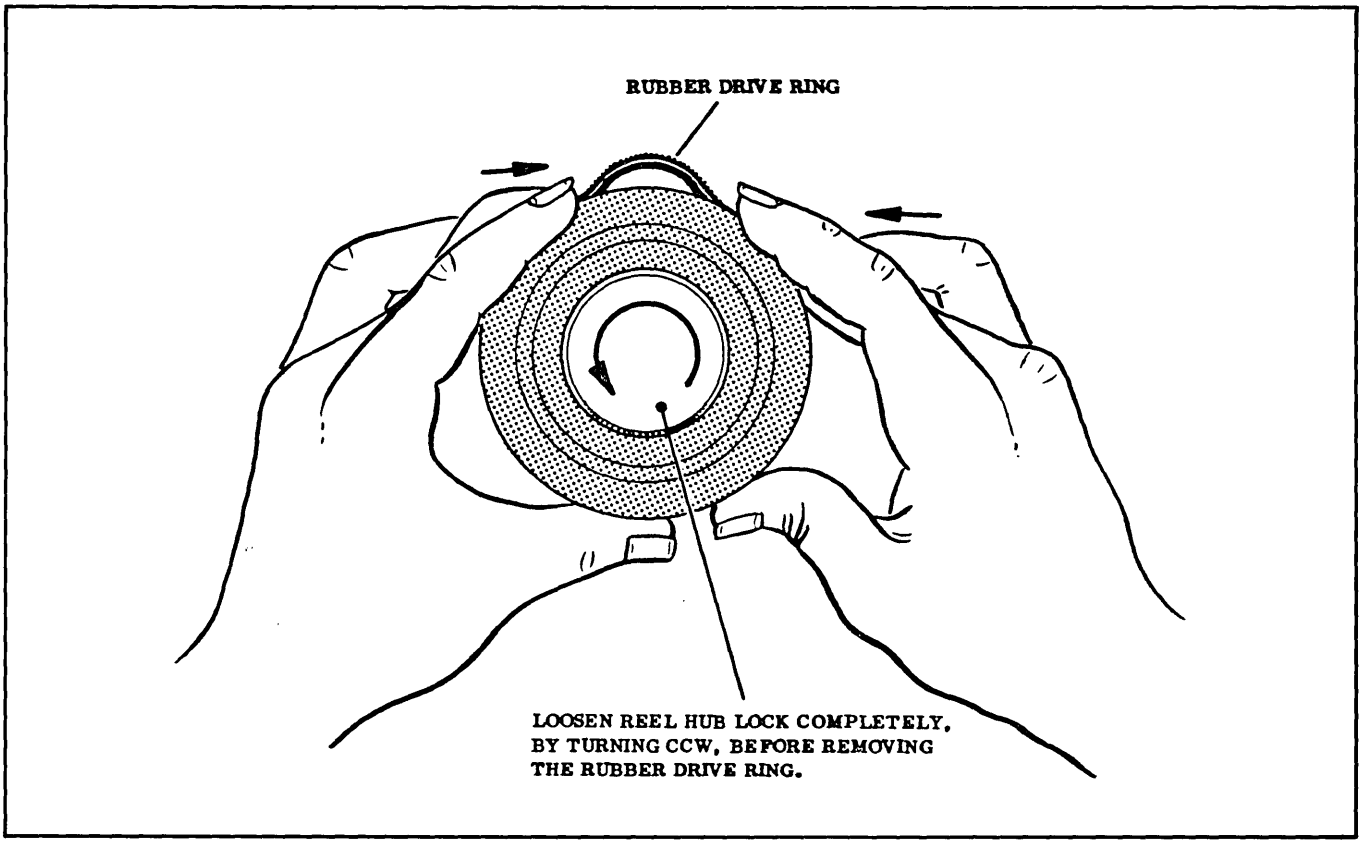

Figure 5-4. Rubber Ring Drive Replacement

SECTION VI

MECHANICAL

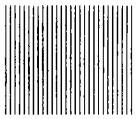

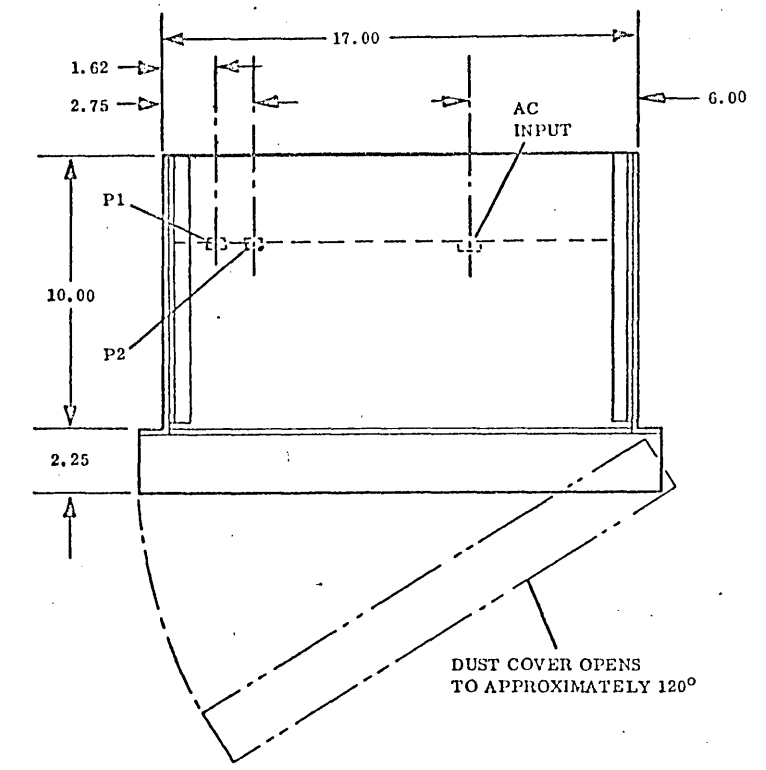

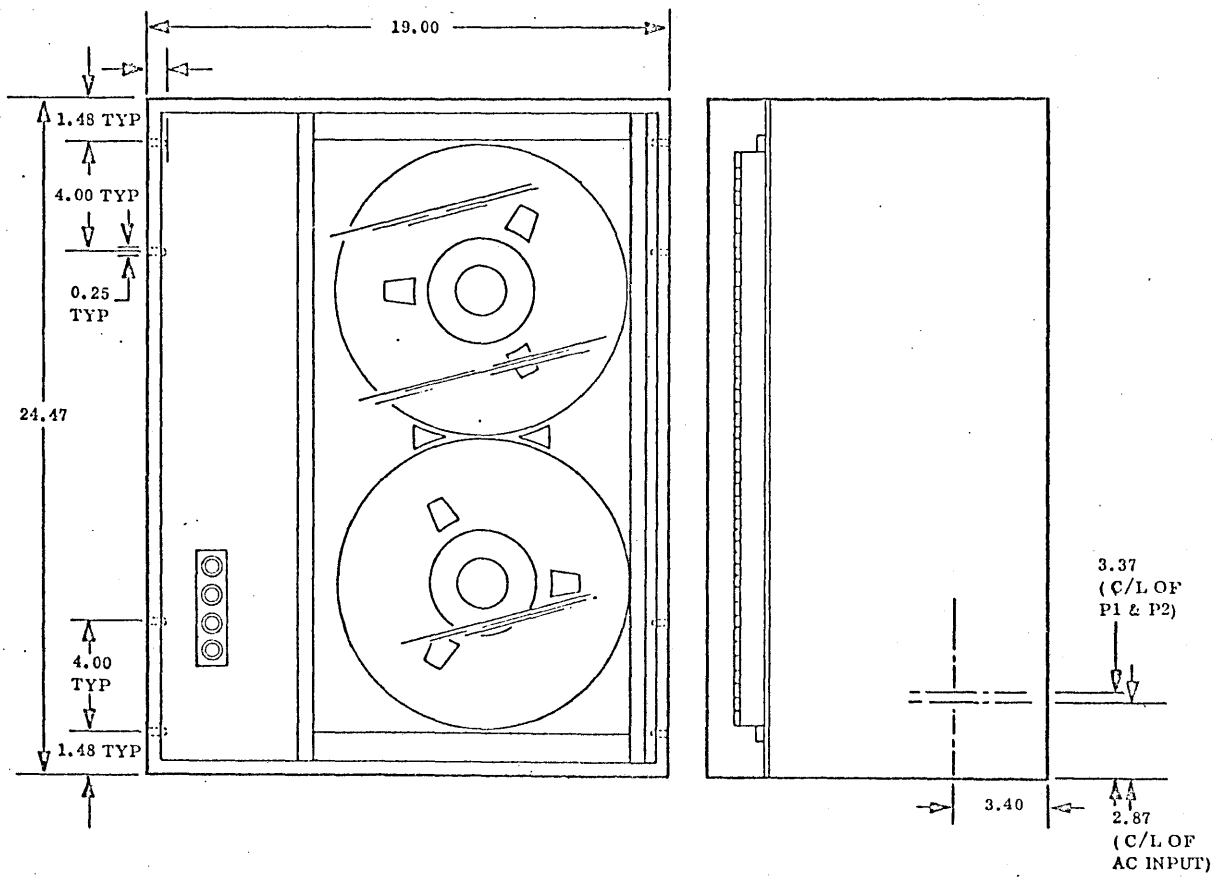

Outline and Installation Drawing

SECTION VII

ELECTRICAL

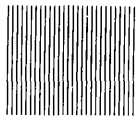

SIGNAL	REAR CONNECTOR AMPHENOL MICRORIBBON 36 PIN P1-	NOTES	INTERFACE CARD		TO
IL	1 WRITE ENABLE	+5 FOR WRITE ONLY			TO C-M
GP	2 REM. LD. FWD.	GROUND TO OPERATE			TO C-P
GP	3 REM. READY	" " "			TO C-S
GP	4 REM. RWD.	" " "			TO C-T
OL	5 END OF TAPE	+5V LEVEL AT EOT			TO C-U
IL	6 COUNT INHIBIT	USED FOR CONT. WRITE, GRD INCREMENTAL			TO GT-P
--	7 PUSHBUTTONS ENABLE	CONNECT TO GRD			TO PUSHBUTTONS COM.
IL	8 SLEW	USED FOR CONT. OPERATION, GRD INCREMENTAL			TO SL-H
IL	9 REVERSE SEL.	" " " " " "			TO SL-L
IL	10 FWD. SEL.	" " " " +5V "			TO SL-M
--	11 GROUND	SIGNAL GRD. CONNECT TO FRAME GRD			
--	12 +5V	100 MA MAX. LOAD			
IL	13 PARITY SEL.	+5V EVEN, 0V ODD	5	E	TO P-E
IP	14 WRITE/STEP CMD.	PULSE +4V MIN. 20-100 USEC	6	F	TO P-F
--	15 SPARE		7		
IL	16 DATA B	LEVEL +4V MIN. TRUE AT LDG. EDGE OF W. CMD. 50 USEC MIN.	8	J	TO P-J
IL	17 DATA 4		9	K	TO P-K
IL	18 DATA 1		10	L	TO P-L
IL	19 DATA 2		11	M	TO P-M
IL	20 DATA 8		12	N	TO P-N
IL	21 DATA A		13	P	TO P-P
--	22 SPARE		14	R	TO P-S
--	23 SPARE		15	S	TO P-T
OL*	24 WRITE ERROR	LEVEL +5V NOM.	16	T	TO P-U
--	25 SPARE		17	U	SPARE
OP	26 OSC. OUT	+5V OSC. PULSES, 10 USEC MIN.	18	V	TO SL-P
OL	27 READY LEVEL	+5V LEVEL INDICATES MACHINE READY	Z	22 & H	TO C-N AND P-H
OL	28 GAP IN PROCESS	+5V LEVEL INDICATES GAP BEING GENERATED	Y	21	TO GT-J, N & R
IP	29 EOF CMD.	PULSE +4V MIN. 20-100 USEC INITIATES EOF GAP	X	20	TO GT-T
IP	30 EOR CMD.	" " " " " " EOR "	W	19	TO GT-U
OL	31 LOAD POINT	+5V LEVEL AT LOAD POINT			TO C-W
	36 FRAME GRD				

IL - INPUT LEVEL +4V TO +6V TRUE 0V ±0.5V FALSE 5 MA SINK.

IP - INPUT PULSE +4V TO +6V TRUE 20-100 USEC. RISE TIME <2USEC 0V ±0.5V FALSE 5 MA SINK.

OL - OUTPUT LEVEL +5V TRUE (±1V), 0V ±0.5V FALSE. WILL SINK 10 MA. SOURCE IMPEDANCE 3K. OUTPUT MAY BE LOADED TO +3V OR HIGHER.

OP - OUTPUT PULSE, +5V TRUE (±1V), 0V ±0.5V FALSE. WILL SINK 10 MA. SOURCE IMPEDANCE 1K. OUTPUT MAY BE LOADED TO +3V OR HIGHER.

GP - LINE NORMALLY +10V. CLOSURE TO 0V ACTUATES REM. FUNCTION. CLOSURE TIME 10 USEC MIN. 100 MSEC MAX. CURRENT <5MA. MAY BE LOADED TO +5V (MIN.) FOR IC LOGIC.

* ERROR SIGNAL TRUE WITHIN 1.9 MS OF WRITE CMD. REMAINS TRUE UNTIL NEXT WRITE CMD.

202-0004-001
INTERFACE CONNECTIONS
MODEL 1600/1510
STANDARD WRITE ONLY
KENNEDY COMPANY
ALTADENA, CALIF.

FIGURE 1.

401-2563-001C

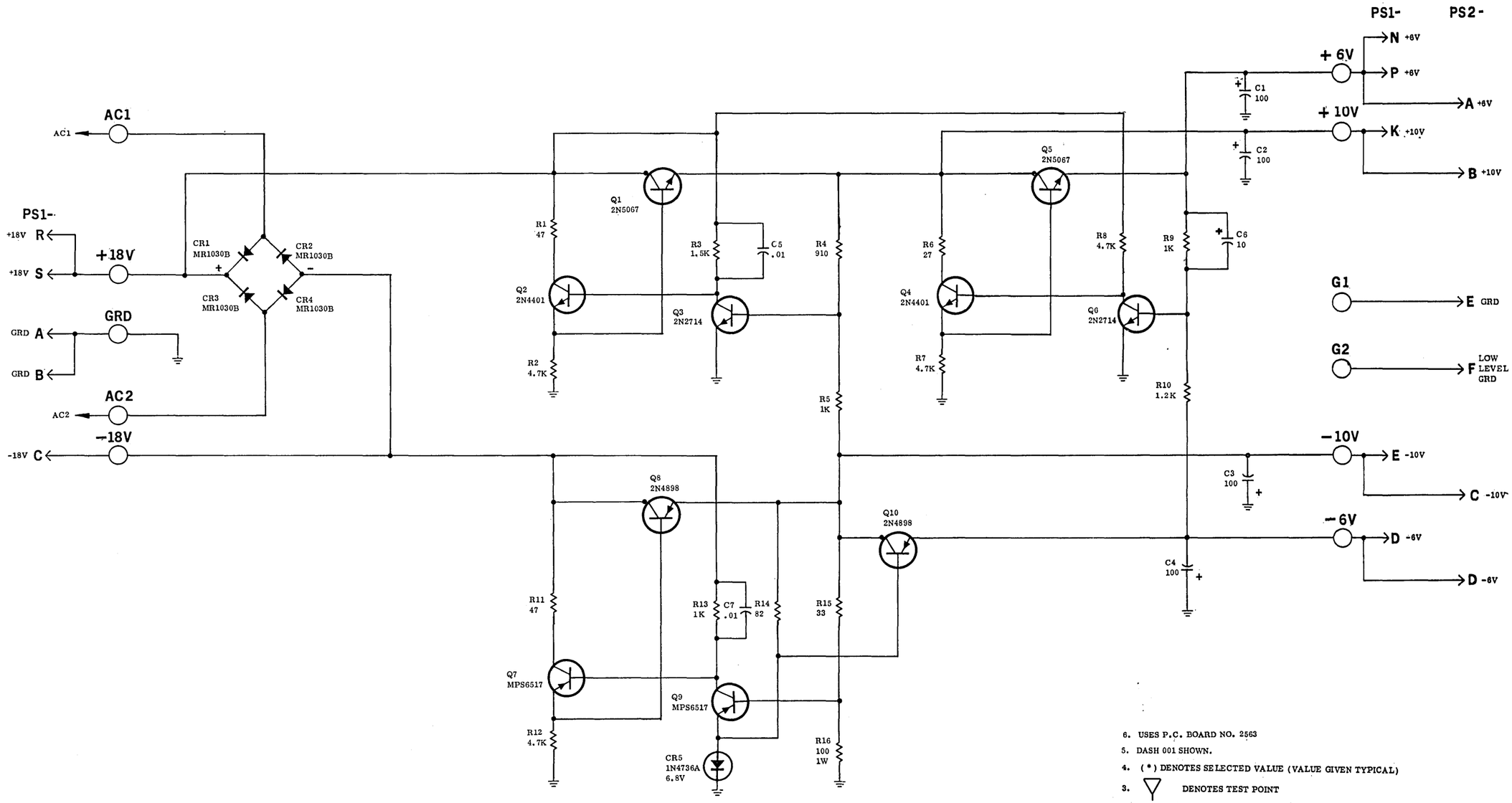

6. USES P.C. BOARD NO. 2563
5. DASH 001 SHOWN.
4. (*) DENOTES SELECTED VALUE (VALUE GIVEN TYPICAL)
3. ▽ DENOTES TEST POINT
2. CAPACITOR VALUES IN MICROFARADS
1. RESISTOR VALUES IN OHMS, FIXED COMP, 5%, 1/2 W

NOTES: UNLESS OTHERWISE SPECIFIED

Power Supply, Type 2307
Schematic Diagram

401-2223-001-

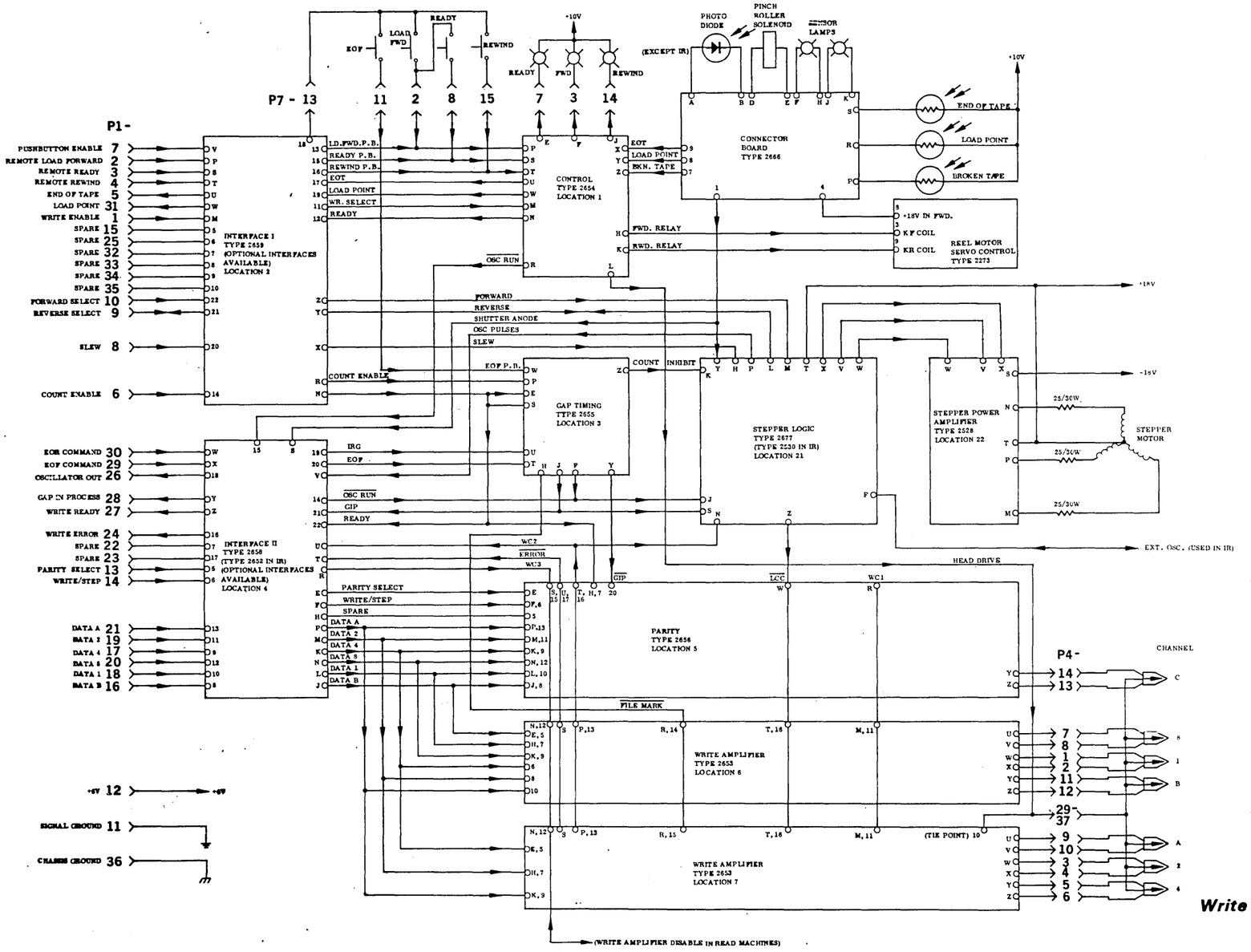

Write Logic Section, Model 1510, Schematic Diagram

TYPE 2273 REEL MOTOR SERVO CONTROL

CARD PURPOSE

Servos and control circuits for both reel motors are contained on the Type 2273 card.

DESCRIPTION

Circuitry for the supply motor will be described. Circuitry for the take-up motor is similar.

Reel Braking

When power is first turned on, dc dynamic braking holds the tape reels in position. The same condition is obtained following a Rewind operation and brings the tape to a stop quickly and smoothly.

In the braking condition, both relays KF and KR are de-energized. Braking current then flows from +18V through KF1-NC, R5 (a current limiting resistor), CR3, the line winding of the supply motor, and KF3-NC to -18V.

Servo Operation

The reel servos control motor torque output to achieve constant tape tension. Tension is sensed by passing the tape over spring loaded buffer arms connected to potentiometers in the servo circuit.

WARNING

The servos are powered entirely from line voltage. Consequently, the components in these circuits are at line potential and can be dangerous unless handled carefully.

KF is energized by grounding Terminal 3. This occurs when the LOAD FORWARD Pushbutton is pressed. The control logic holds KF energized until the conclusion of a Rewind operation. During this time, the dc voltage is disconnected from the reel motors and replaced by controlled ac voltage.

Ac power is connected to the supply reel motor through KF2-NO, control bridge rectifier CR8, the motor windings, and KF3-NO. The bridge conducts ac current to the extent that it is loaded at its dc terminals.

Transistor Q4 is connected as a dc load to CR8. Its conduction is controlled by servo potentiometer R7 and transistor Q2. Part of the voltage appearing across Q4 is applied to the potentiometer. When the slider voltage exceeds the total of the forward-biased diode drops of Q2, Q4, and CR2, then Q4 begins to conduct. As it conducts, ac current flows through the supply reel motor and produces torque.

Rectifiers CR3 and CR4 isolate the controlled ac supplies of the two reel motors from each other. During dc braking they are both forward-biased and provide braking current to their respective reel motors.

A dc path is completed to the pinch roller solenoid whenever KF is energized and KR is de-energized, as in normal operation. Current flows from +18V through KF1-NO and KR2-NC to the solenoid.

Another dc path is completed to the File Protect solenoid (in Write/Read units only) whenever KF is energized. Current flows from +18V through KF1-NO to Terminal 6 and the File Protect solenoid. This allows tape reels to be changed in the dc condition without switching power off, yet still provides full file protection by de-energizing the File Protect solenoid while the reels are being changed.

Rewind

Relay KR is interlocked with KF1-NO and cannot be energized unless KF is also energized. KR is energized by grounding Terminal 9. This occurs when the REWIND Pushbutton is pressed. A holding circuit is provided in the control logic. In the rewind condition the pinch roller solenoid is de-energized, current being switched instead to the REWIND Indicator on the front panel. KR3-NO connects the ac line directly to the supply motor through R6 (thus bypassing CR8), causing the supply motor to run independently of the condition of the supply tension arm and potentiometer R7.

Note

Resistor R6 and relay connection KR3 are not duplicated on the take-up motor.

401-2273-001A

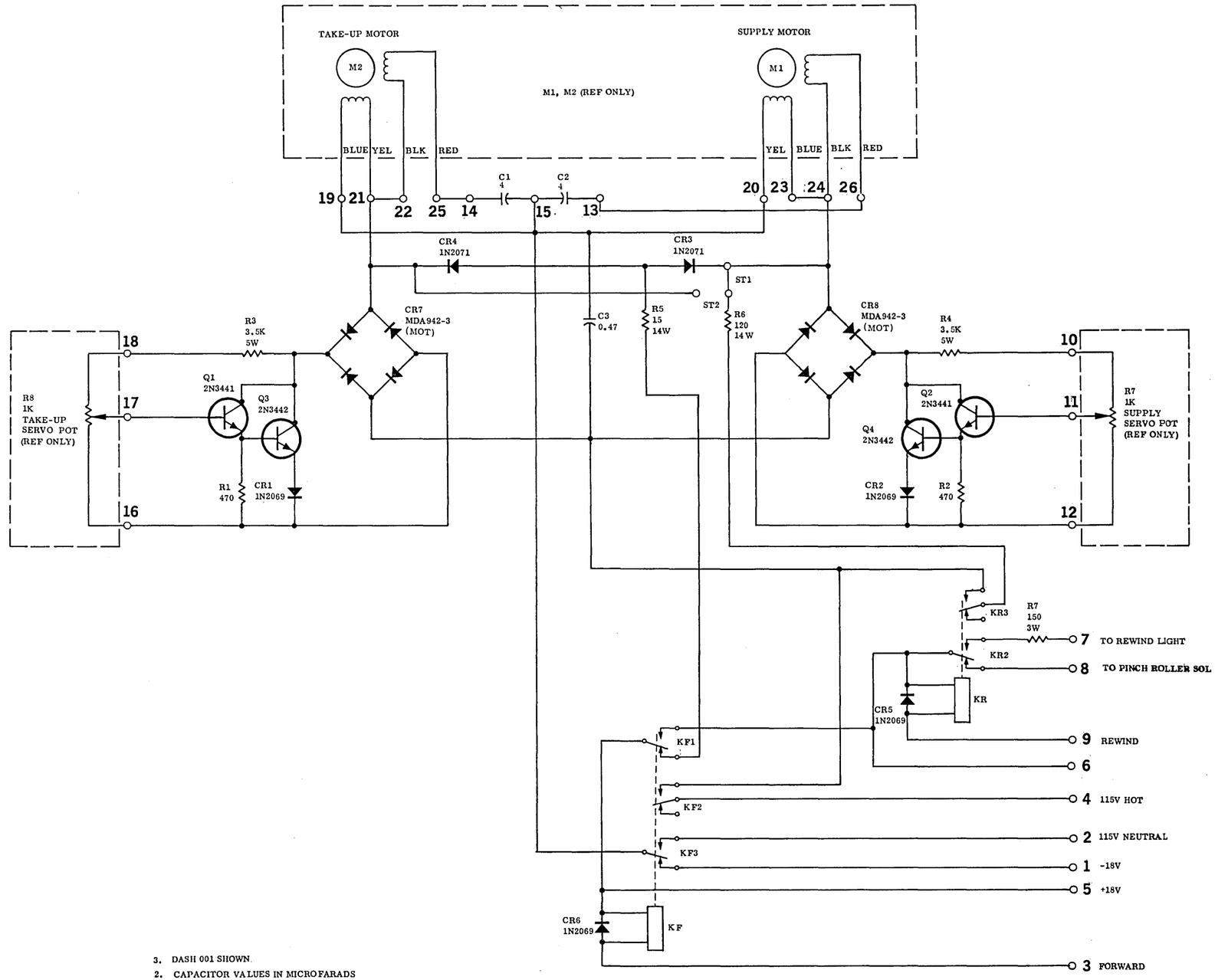

3. DASH 001 SHOWN.
2. CAPACITOR VALUES IN MICROFARADS
1. RESISTOR VALUES IN OHMS, FIXED COMP, 5%, 1/2 W

NOTES: UNLESS OTHERWISE SPECIFIED

Reel Motor Servo Control, Type 2273, Schematic Diagram

SECTION VIII

PLUG-IN MODULES

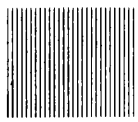

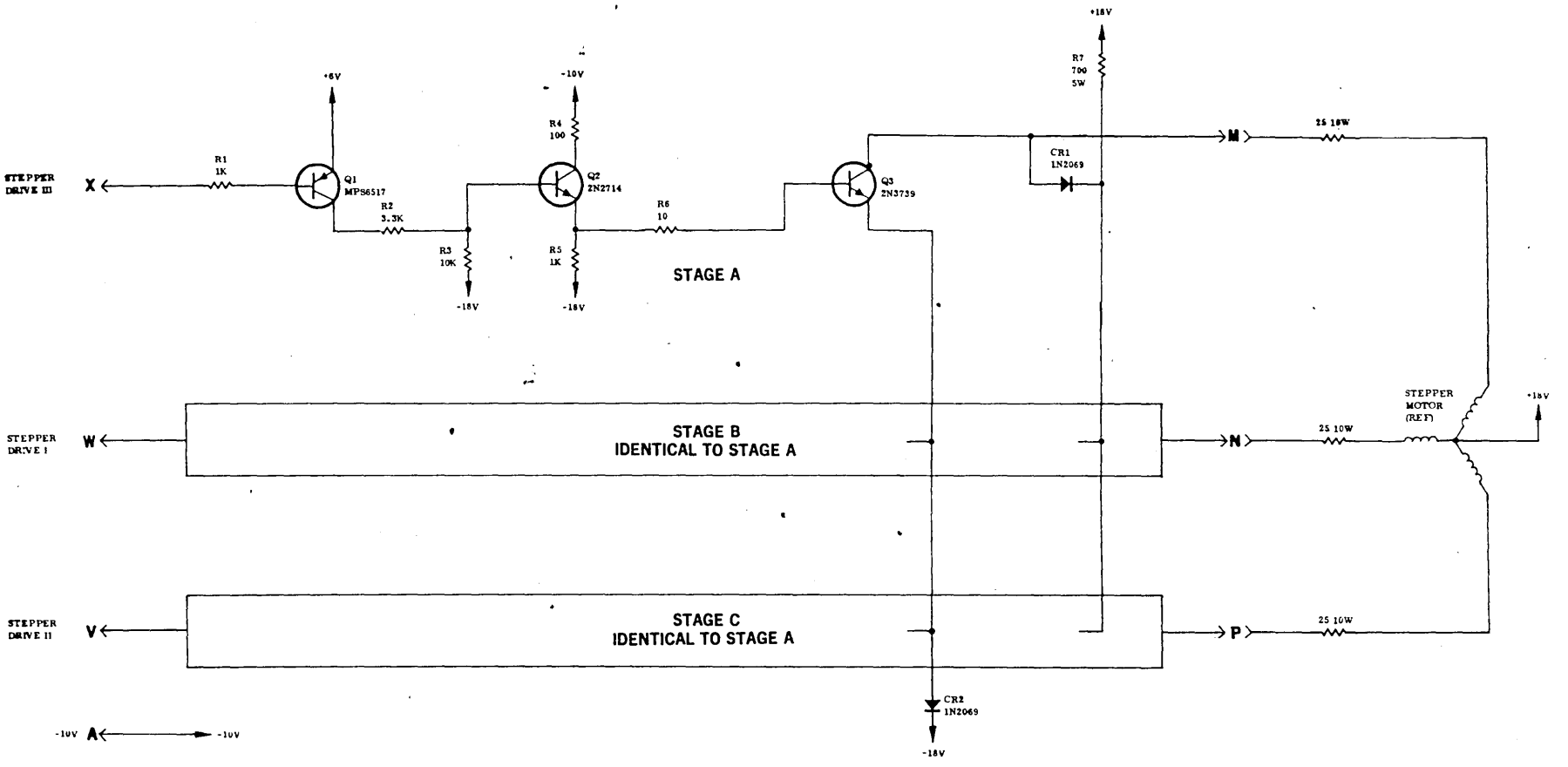

5. DASH -001 AND -002 SHOWN
4. (*) DENOTES SELECTED VALUE (VALUE GIVEN TYPICAL)
3. ▽ DENOTES TEST POINT
2. CAPACITOR VALUES IN MICROFARADS
1. RESISTOR VALUES IN OHMS, FIXED COMP, 5%, 1/2 W

NOTES: UNLESS OTHERWISE SPECIFIED

Stepper Power Amplifier, Type 2528
Schematic Diagram

401-2653-001

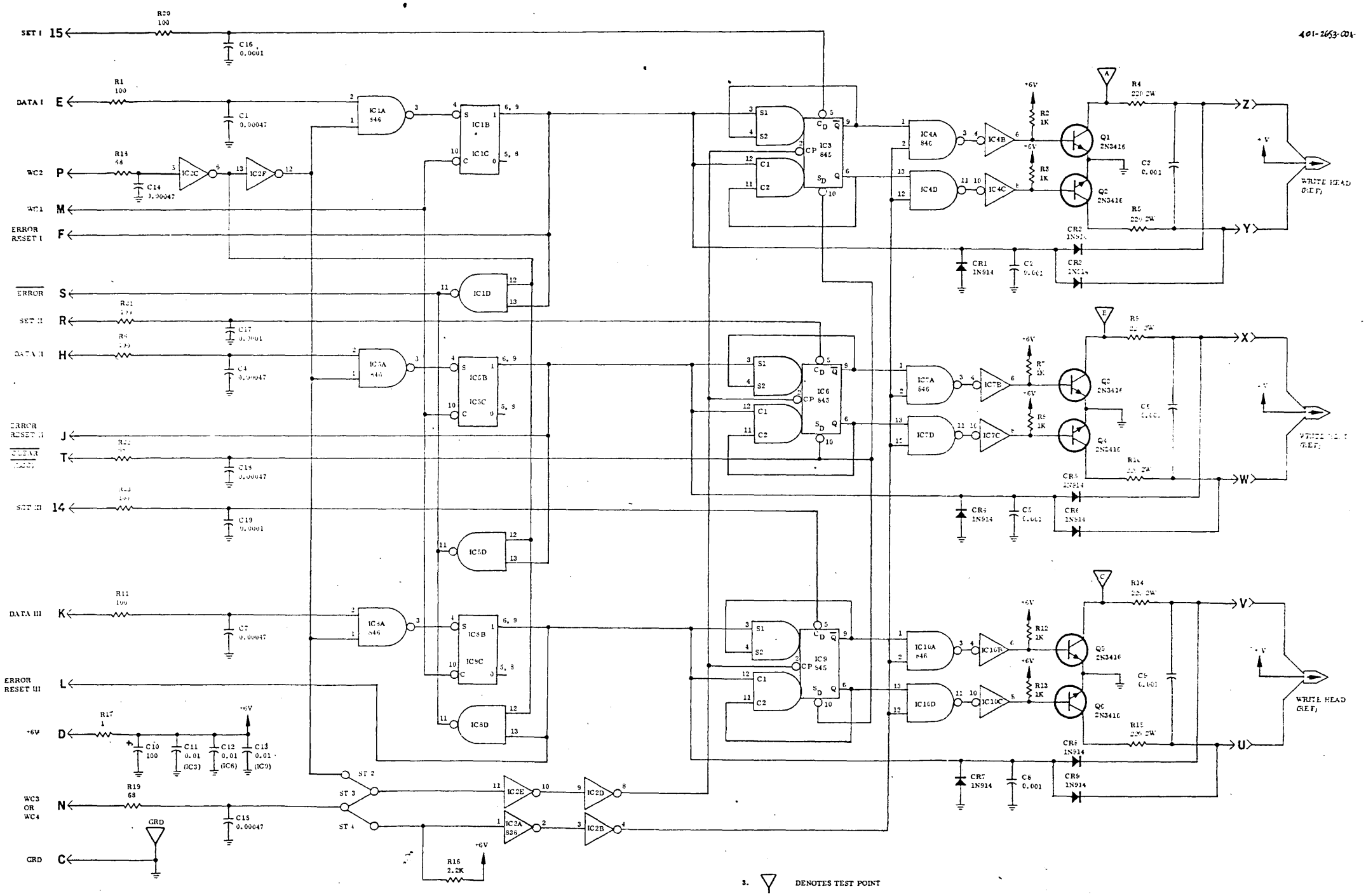

3. ▽ DENOTES TEST POINT
2. CAPACITOR VALUES IN MICROFARADS
1. RESISTOR VALUES IN OHMS, FIXED COMP, 5%, 1/2 W

NOTES: UNLESS OTHERWISE SPECIFIED

Write Amplifier, Type 2653, Schematic Diagram Sheet 1 of 2

DASH NO.	-001	-002	-003	-004	-005	-006	-007	-008	-009	-010
FIRST USED ON	1600FC			1510	1510IR					
SPEED	300			500	300					
DENSITY	200			ALL	200					
C2	omit			AS	AS					
C3	AS			0.00047	0.00047					
C5	omit			AS	AS					
C6	AS			0.00047	0.00047					
C8	omit			AS	AS					
C9	AS			0.00047	0.00047					
C16	omit			AS	AS					
C17	AS			AS	AS					
C19	AS			AS	AS					
CR1	omit			AS	AS					
CR2	omit			AS	AS					
CR3	omit			AS	AS					
CR4	omit			AS	AS					
CR5	omit			AS	AS					
CR6	omit			AS	AS					
CR7	omit			AS	AS					
CR8	omit			AS	AS					
CR9	omit			AS	AS					
R4	AS			680 ½W	680 ½W					
R5	AS			680 ↑	680 ↑					
R9	AS			680 |	680 |					
R10	AS			680 |	680 |					
R14	AS			680 ↓	680 ↓					
R15	AS			680 ½W	680 ½W					
R16	omit			AS	omit					
R20	omit			AS	AS					
R21	AS			AS	AS					
R23	AS			AS	AS					
ST2	AS			omit	AS					
ST3	omit			AS	omit					
ST4	AS			omit	AS					

REV - REVERSED
AS - AS SHOWN

Write Amplifier, Type 2653,
Schematic Diagram Sheet 2 of 2

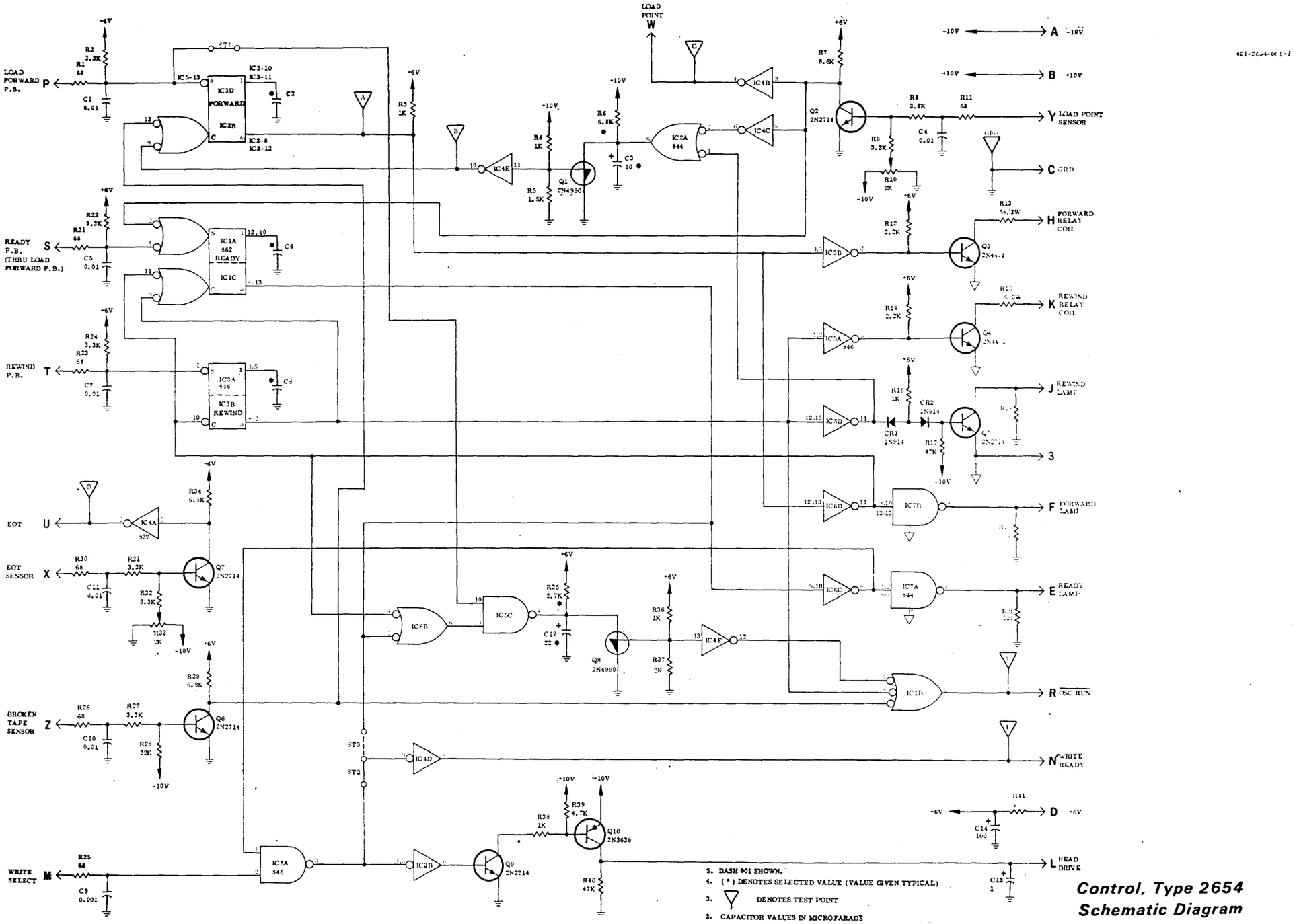

401-2654-001-E

5. DASH #01 SHOWN.
4. (*) DENOTES SELECTED VALUE (VALUE GIVEN TYPICAL)
3. ▽ DENOTES TEST POINT
2. CAPACITOR VALUES IN MICROFARADS
1. RESISTOR VALUES IN OHMS, FIXED COMP, 5%, 1/2 W

NOTES: UNLESS OTHERWISE SPECIFIED

Control, Type 2654
Schematic Diagram

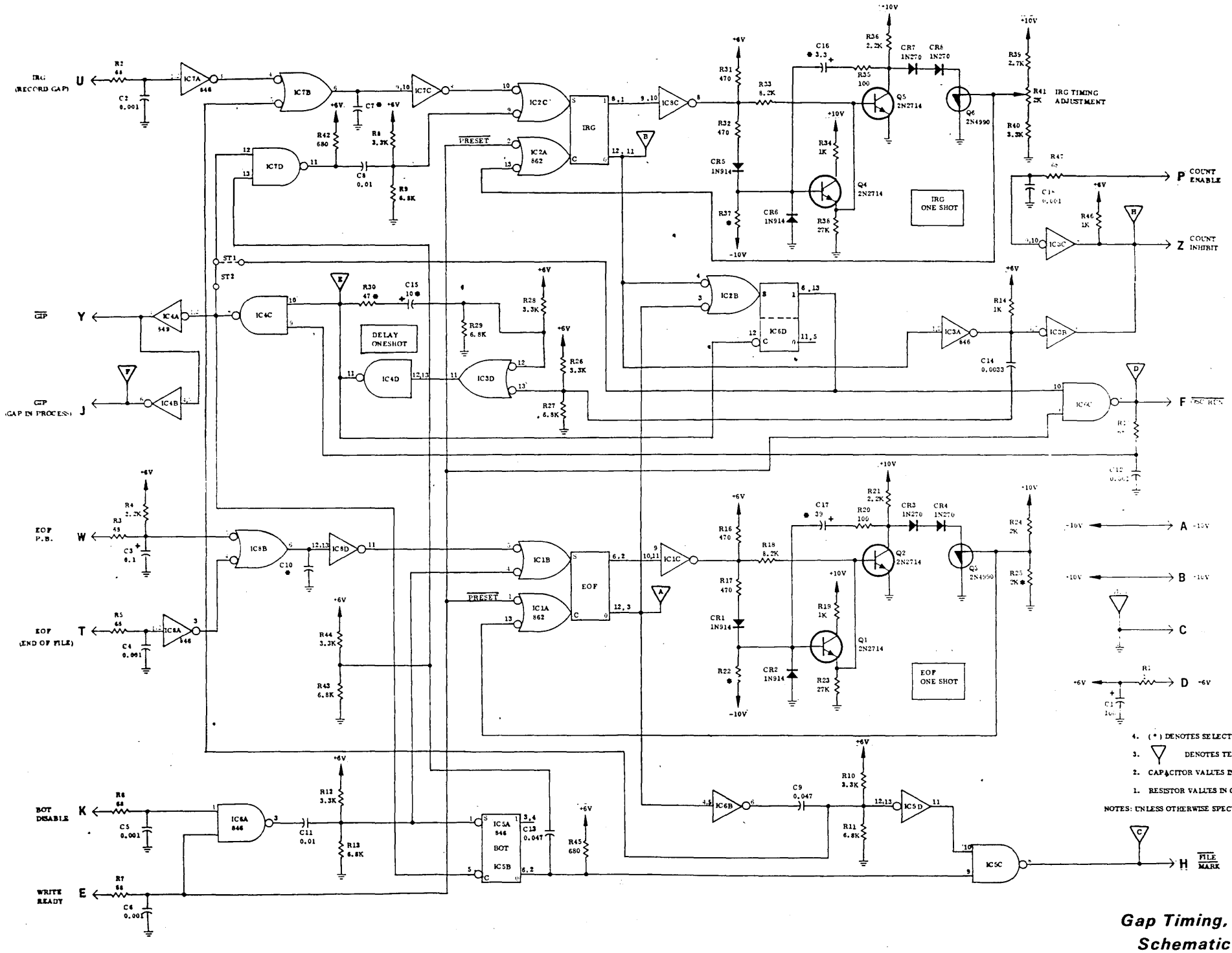

4. (*) DENOTES SELECTED VALUE (VALUE GIVEN TYPICAL)
3. ▽ DENOTES TEST POINT
2. CAPACITOR VALUES IN MICROFARADS
1. RESISTOR VALUES IN OHMS, FIXED COMP. 5%, 1/2 W

NOTES: UNLESS OTHERWISE SPECIFIED

Gap Timing, Type 2655
Schematic Diagram

441-2656-0C1-A

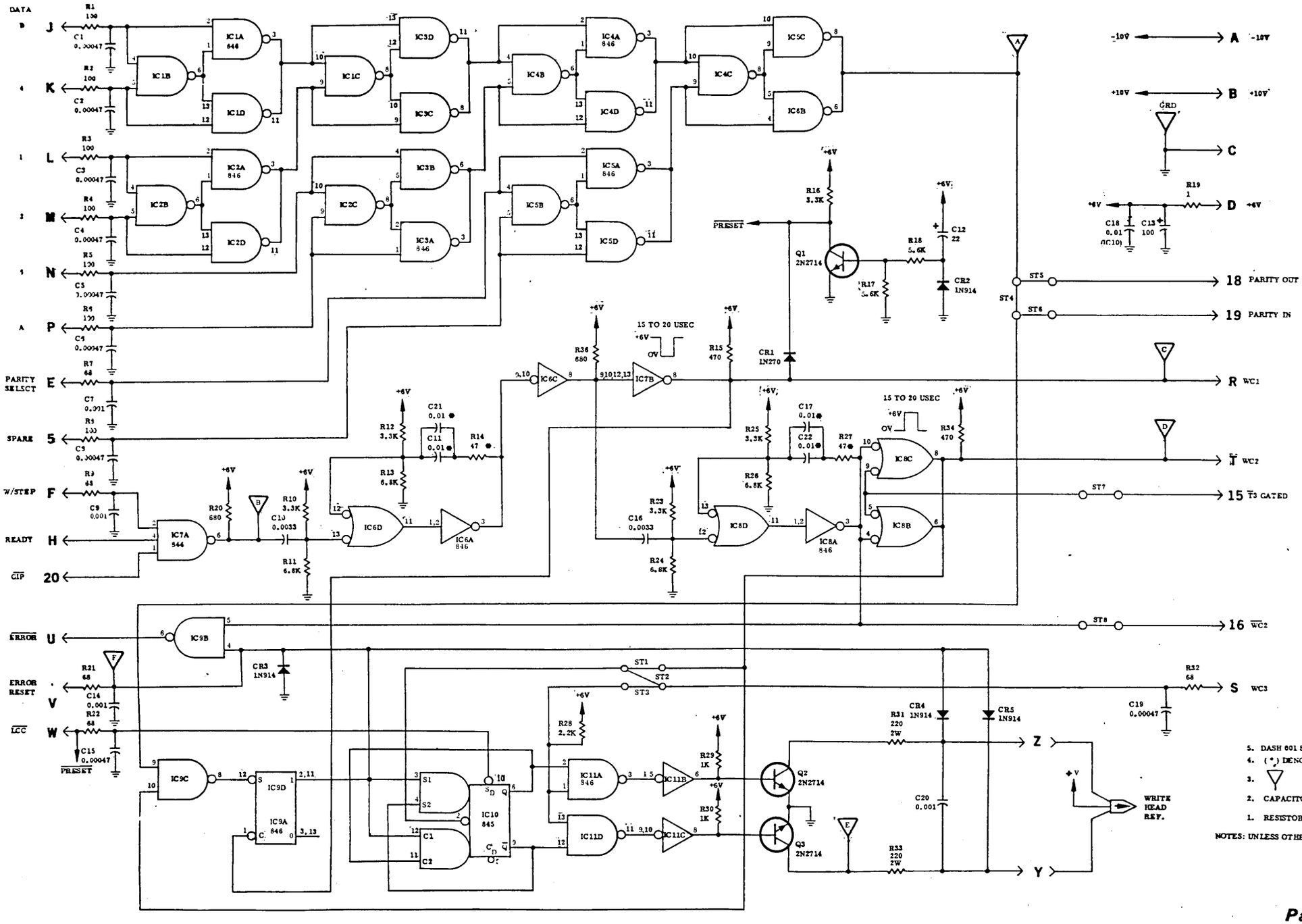

5. DASH 001 SHOWN.
4. (*) DENOTES SELECTED VALUE (VALUE GIVEN TYPICAL)
3. ▽ DENOTES TEST POINT
2. CAPACITOR VALUES IN MICROFARADS
1. RESISTOR VALUES IN OHMS, FIXED COMP, 5%, 1/2 W

NOTES: UNLESS OTHERWISE SPECIFIED

Parity, Type 2656

Schematic Diagram

Sheet 1 of 2

DASH NO.	-001	-002	-003	-004	-005	-006	-007	-008	-009	-010
FIRST USED ON	1600FC			1510	1510IR					
SPEED	ALL			All	300					
DENSITY	200-556			200-556	200					
R8	OMIT			OMIT	OMIT					
C8	STRAP			STRAP	STRAP					
R28	OMIT			AS	OMIT					
R31	AS			680	680					
R33	AS			680	680					
CR3	OMIT			AS	AS					
CR4	OMIT			AS	AS					
CR5	OMIT			AS	AS					
C20	AS			0.00047	0.00047					
ST 1	AS			OMIT	AS					
ST 2	OMIT			AS	OMIT					
ST 3	AS			OMIT	AS					
C11	AS			AS	AS					
C21	AS			AS	AS					
R14	AS			AS	AS					
C17	AS			AS	AS					
C22	AS			AS	AS					
R27	AS			AS	AS					
ST4	AS			AS	AS					
ST5	OMIT			OMIT	OMIT					
ST6	OMIT			OMIT	OMIT					
ST7	OMIT			OMIT	OMIT					
ST8	OMIT			OMIT	OMIT					

REV - REVERSED
AS - AS SHOWN

Parity, Type 2656 Schematic Diagram Sheet 2 of 2

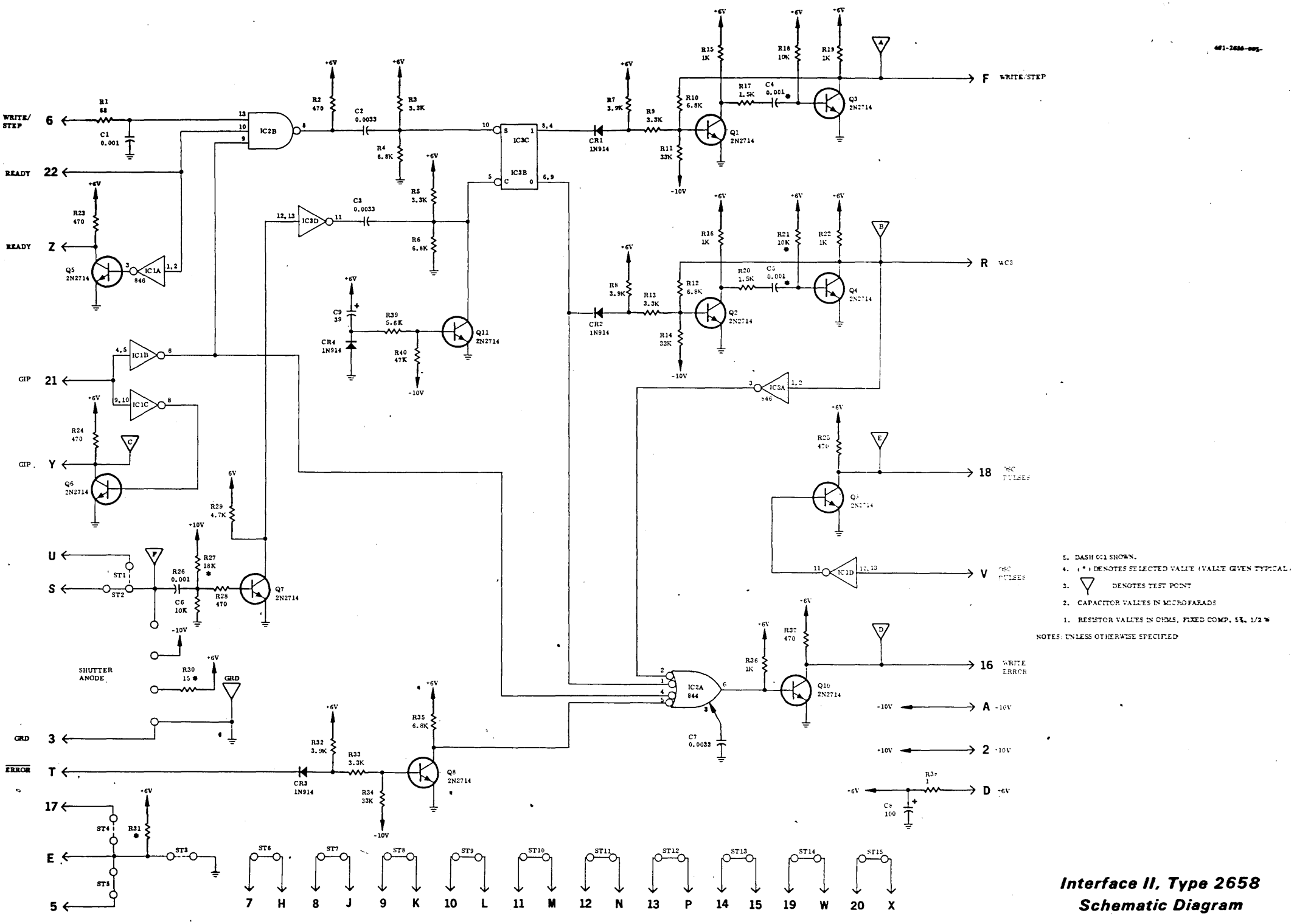

5. DASH 001 SHOWN.
4. (*) DENOTES SELECTED VALUE (VALUE GIVEN TYPICAL)
3. ▽ DENOTES TEST POINT
2. CAPACITOR VALUES IN MICROFARADS
1. RESISTOR VALUES IN OHMS, FIXED COMP. 5%, 1/2 W

NOTES: UNLESS OTHERWISE SPECIFIED

Interface II, Type 2658
Schematic Diagram

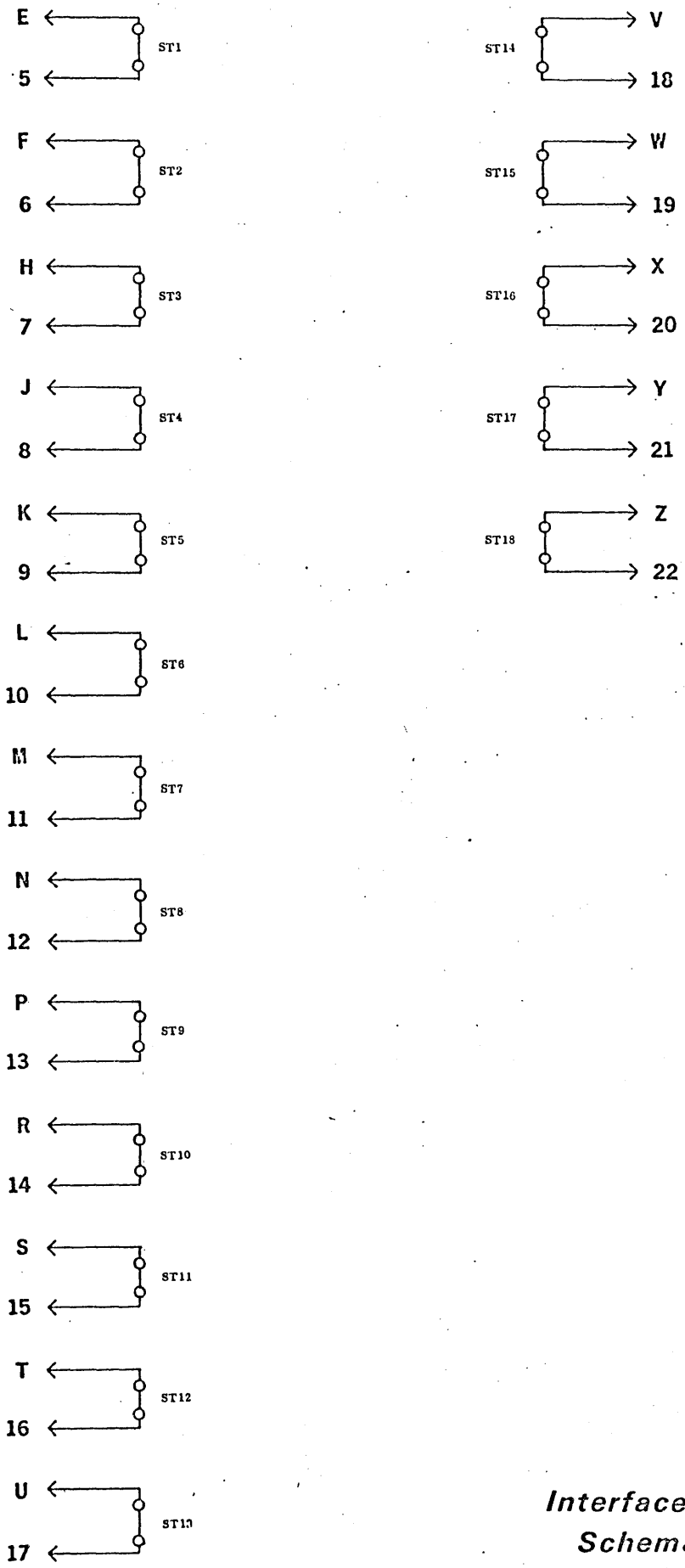

Interface I, Type 2659
Schematic Diagram

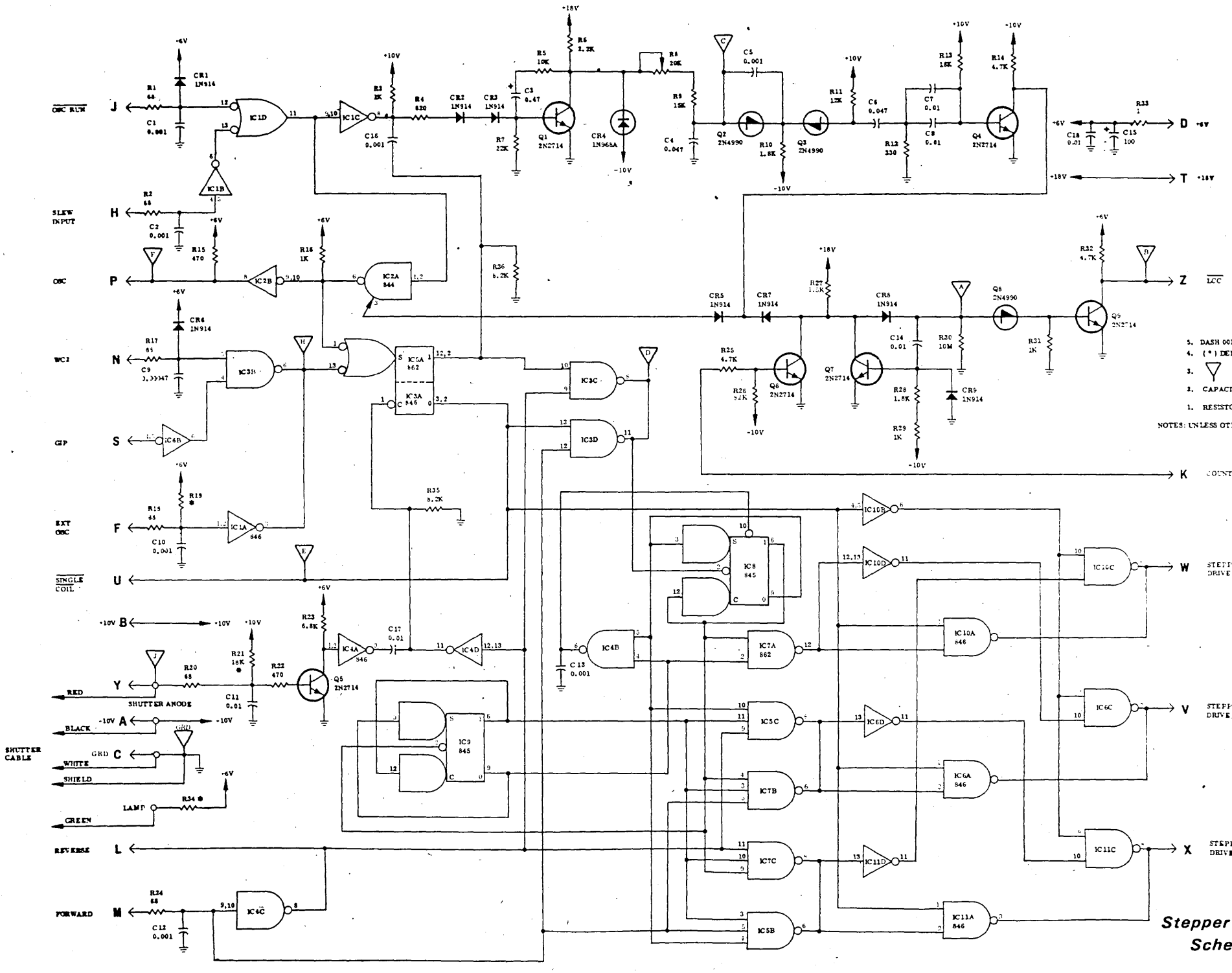

441-2677-001 A

5. DASH 001 SHOWN.
4. (*) DENOTES SELECTED VALUE (VALUE GIVEN TYPICAL)
3. ▽ DENOTES TEST POINT
2. CAPACITOR VALUES IN MICROFARADS
1. RESISTOR VALUES IN OHMS, FIXED COMP. 5%, 1/2 W

NOTES: UNLESS OTHERWISE SPECIFIED

DASH NO.	[illegible]	[illegible]
FIRST USED ON	[illegible]	[illegible]
SPEED	[illegible]	[illegible]
DENSITY	[illegible]	[illegible]
C11	[illegible]	[illegible]
R21	[illegible]	[illegible]
C14	[illegible]	[illegible]

Stepper Logic, Type 2677
Schematic Diagram

MODIFICATIONS

APPENDIX

GLOSSARY OF TERMS

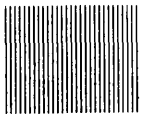

GLOSSARY OF TERMS

ASYNCHRONOUS OPERATION. The mode of operation in which each step of an operation starts as a result of a signal generated by the completion of the previous step.

BCD MODE. Recording mode in which each character is composed of bits representing an alphanumeric character. Sixty-three such characters may be represented by 6 bits.

BINARY MODE. Recording mode in which each data bit in one byte represents one digit of a binary number of total length the number of possible bits in the byte.

BIT. A binary digit.

BLOCK. A group of things, such as words, characters or digits that is handled as a unit.

BYTE. A sequence of adjacent binary digits acted upon as a unit and usually shorter than a word. In tape usage, usually one character.

CHARACTER. A sequence of adjacent binary bits in one line across the tape. In seven channel recording a character must have at least one bit (odd parity) or at least two bits (even parity).

END OF TAPE. (EOT) Location of a marker near the physical end of tape. Recording must end shortly after EOT but record may be finished.

FILE. A collection of related records which are treated as a unit.

FILE GAP. An area on the magnetic tape which indicates the end of a file.

FLAG. An indicator used for identification that signals the occurrence of a particular condition.

FLUX CHECK. Each character is read immediately after recording to verify that it appears on the tape in the intended form.

HEAD. A device that reads, records or erases data on a storage medium such as paper tape and/or magnetic tape.

LEADER. The blank section of tape at the beginning of a reel of tape.

LCC. Longitudinal Check Character (sometimes LRC -- Longitudinal Redundancy Check). A character composed of bits generated to make the sum of all bits in that track even. It is written four or five character spaces after end of record. If all tracks are even, LCC is missing.

LOAD POINT. (LP) Location of a marker ten feet from physical beginning of tape. Recording may begin shortly after this point.

MAGNETIC TAPE. A tape with a magnetic surface on which data can be stored by selective polarization of portions of the surface.

MARK. Same as Flag.

MARKER. Strips of reflective foil affixed to the tape to indicate Load Point and End of Tape. Computer tape has these markers in place.

NRZI. Recording method in which binary ones are represented by transitions of flux on the tape.

PACKING DENSITY. The number of useful storage cells per unit of dimension, e.g., the number of bits per inch stored on one track of magnetic tape.

PARITY BIT. A binary digit appended to an array of bits to make the sum of all bits always odd or always even.

PARITY CHECK. A check that tests whether the number of ones (or zeros) in an array of binary digits is odd or even.

RECORD. A collection of related items of data, treated as a unit.

RECORD GAP. On magnetic tape, an area used to indicate the end of a record.

SKEW. The angular displacement of an individual printed character, group of characters, or other data from the intended or ideal placement.

SYNCHRONOUS. The mode of operation in which each step of an operation starts as a result of a signal generated at a particular time.

TAPE DRIVE. A device that moves tape past a Head.

TAPE TRANSPORT. Same as Tape Drive.

TRACK. The portion of a moving storage medium that is accessible to a given reading Head position.

WORD LENGTH. The number of bits or other characters in a word.

Warranty

Kennedy Company products are warranted to be free from defects in materials and workmanship for a period of one year.

Kennedy Company reserves the right to inspect any defective parts or material to determine damage and cause of failure.

This warranty does not apply to any Kennedy equipment that has been subject to neglect, misuse, improper installation and maintenance, or accident.

Liability under warranty is limited to no charge repair of defective units when equipment is shipped prepaid to factory or authorized service center after authorization from Kennedy Company to make such return.

Kennedy Company is continually striving to provide improved performance, value and reliability in their products, and reserves the right to make these improvements without being obligated to retrofit delivered equipment.

KENNEDY CO.

KENNEDY CO.
540 WEST WOODBURY ROAD, ALTADENA, CALIFORNIA