SR23-3469-0
Course 10331

IBM Field Engineering Education
Supplementary Course Material

# Programming System Introduction
## Project Book 2

## PREFACE

This publication is primarily intended for use by IBM personnel enrolled in course 10331.

**PRELIMINARY EDITION** (October 1970)
This publication has been printed in a preliminary format so that it would be available to the intended users in time for training on this course. This preliminary manual may contain typographical errors that would normally be corrected before publication. This edition is not eligible for suggestion awards, however, your comments will be appreciated.

Issued to: _____

Branch Office: _____ No: _____

Address: _____

_____

If this manual is mislaid, please return it to the above address.

Address any comments concerning the contents of this publication to: IBM, Field Support Documentation, Dept 927, Rochester, Minnesota 55901.

CONTENTS

```
PPPPPPPPPPP   RRRRRRRRRRR   OOOOOOOOOOOOO     JJJJJJJJJJ  BBBBBBBBBBB   OOOOOOOOOOOOO  OOOOOOOOOOOOO  KK         KK
PPPPPPPPPPPP  RRRRRRRRRRRR  OOOOOOOOOOOOO     JJJJJJJJJJ  BBBBBBBBBBBB  OOOOOOOOOOOOO  OOOOOOOOOOOOO  KK        KK
PP         PP RR         RR OO         OO         JJ     BB         BB OO         OO OO         OO KK       KK
PP         PP RR         RR OO         OO         JJ     BB         BB OO         OO OO         OO KK     KK
PP         PP RR         RR OO         OO         JJ     BB        BB  OO         OO OO         OO KK    KK
PPPPPPPPPPPP  RRRRRRRRRRRR  OO         OO         JJ     BBBBBBBBBB    OO         OO OO         OO KKKKKKK
PPPPPPPPPPP   RRRRRRRRRRR   OO         OO         JJ     BBBBBBBBBB    OO         OO OO         OO KKKKKKK
PP            RR     RR     OO         OO         JJ     BB        BB  OO         OO OO         OO KK    KK
PP            RR      RR    OO         OO   JJ    JJ     BB         BB OO         OO OO         OO KK     KK
PP            RR       RR   OO         OO   JJ    JJ     BB         BB OO         OO OO         OO KK      KK
PP            RR        RR  OOOOOOOOOOOOO   JJJJJJJJ     BBBBBBBBBBBB  OOOOOOOOOOOOO  OOOOOOOOOOOOO  KK       KK
PP            RR         RR OOOOOOOOOOOOO    JJJJJJ      BBBBBBBBBBBB  OOOOOOOOOOOOO  OOOOOOOOOOOOO  KK        KK
```

```
 2222222222
22222222222
22        22
          22
          22
         22
       22
     22
   22
 22
22222222222
22222222222
```

```
 SSSSSSSSS   UU        UU  BBBBBBBBBB   RRRRRRRRRR   UU        UU  TTTTTTTTTTTT   IIIIIIIIII   NN        NN
SSSSSSSSSSS  UU        UU  BBBBBBBBBBB  RRRRRRRRRRR  UU        UU  TTTTTTTTTTTT   IIIIIIIIII   NNN       NN
SS        SS UU        UU  BB        BB RR        RR UU        UU       TT            II       NNNN      NN
SS           UU        UU  BB        BB RR        RR UU        UU       TT            II       NN NN     NN
SSS          UU        UU  BB       BB  RR        RR UU        UU       TT            II       NN  NN    NN
 SSSSSSSSS   UU        UU  BBBBBBBBBB   RRRRRRRRRRRR UU        UU       TT            II       NN   NN   NN
  SSSSSSSS   UU        UU  BBBBBBBBBB   RRRRRRRRRRRR UU        UU       TT            II       NN    NN  NN
        SSS  UU        UU  BB        BB RR    RR    UU        UU       TT            II       NN     NN NN
         SS  UU        UU  BB        BB RR     RR   UU        UU       TT            II       NN      NNNN
SS       SS  UU        UU  BB        BB RR      RR  UU        UU       TT            II       NN       NNN
SSSSSSSSSSS  UUUUUUUUUUUU  BBBBBBBBBBB  RR       RR UUUUUUUUUUUU       TT         IIIIIIIIII  NN        NN
 SSSSSSSSS    UUUUUUUUUU   BBBBBBBBBB   RR        RR  UUUUUUUUUU       TT         IIIIIIIIII  NN         N
```

```
 9999999999
999999999999
99        99
99        99
99        99
999999999999
999999999999
          99
          99
99        99
999999999999
 9999999999
```

EXTERNAL SYMBOL DICTIONARY

| SYMBOL | TYPE | ID | ADDR | LENGTH | LD ID |
|---|---|---|---|---|---|
| SUBRTN01 | SD | 01 | 000000 | 0000F8 | |
| EXPONENT | ER | 02 | | | |
| EXPONENT | SD | 03 | 0000F8 | 0000BC | |

```
 LOC  OBJECT CODE    ADDR1 ADDR2  STMT   SOURCE STATEMENT                                                F08APR70   9/17/70
000000                              2 SUBRTN01 CSECT                                                                  00000200
00000C                              3 RBASE    EQU   12          BASE REGISTER FOR THE PROGRAM.                         00000300
00000F                              4 RX       EQU   15          ANY SCRATCH REGISTER.                                  00000400
000000                              5 R0       EQU   0                                                                  00000500
000001                              6 R1       EQU   1                                                                  00000600
000002                              7 R2       EQU   2                                                                  00000700
000003                              8 R3       EQU   3                                                                  00000800
000004                              9 R4       EQU   4                                                                  00000900
000005                             10 R5       EQU   5                                                                  00001000
000006                             11 R6       EQU   6                                                                  00001100
000007                             12 R7       EQU   7                                                                  00001200
00000A                             13 R10      EQU   10                                                                 00001300
00000B                             14 R11      EQU   11                                                                 00001400
00000C                             15 R12      EQU   12                                                                 00001500
00000D                             16 R13      EQU   13                                                                 00001600
00000E                             17 R14      EQU   14                                                                 00001700
00000F                             18 R15      EQU   15                                                                 00001800

                                   20 *                    ************************************                          00002000
                                   21 *                    * SUBROUTINE USAGE WORK PROJECT 1. *                          00002100
                                   22 *                    * ---------- ----- ---- ------- -- *                          00002200
                                   23 *                    ************************************                          00002300

                                   25 ********************************************************************************** 00002500
                                   26 *                                                                                   00002600
                                   27 *        THIS PROGRAM IS BEING 'CALLED' BY A HIGHER PROGRAM, WHICH I                00002700
                                   28 *        WILL CALL 'BIGBRTHR', AND, SINCE THIS IS A 'CALLED' PROGRAM,               00002800
                                   29 *        IT HAS CERTAIN RESPONSIBILITIES TO IT'S 'CALLER' ('BIGBRTHR').             00002900
                                   30 *        FOR EXAMPLE, WE ARE GOING TO HAVE TO RETURN TO HIS PROGRAM                 00003000
                                   31 *        WHEN WE ARE FINISHED EXECUTING, AND MUST THEREFORE SAVE HIS                00003100
                                   32 *        REGISTERS SO THAT WE MAY GIVE THEM BACK TO HIM UPON RETURN.                00003200
                                   33 *                                                                                   00003300
                                   34 *        CONVENTIONS SAY THAT OUR 'CALLER' ('BIGBRTHR') MUST SEND US                00003400
                                   35 *        THE ADDRESS OF A SAVE AREA IN REGISTER 13 WHEN HE BRANCHES                 00003500
                                   36 *        TO OUR PROGRAM, AND THAT WE MUST SAVE HIS REGISTERS IN THE                 00003600
                                   37 *        4TH THROUGH 18TH WORDS OF THAT AREA, STARTING WITH REGISTER                00003700
                                   38 *        14 IN THE 4TH WORD, AND ENDING WITH REGISTER 12 IN THE 18TH                00003800
                                   39 *        WORD OF THAT AREA.                                                         00003900
                                   40 *                                                                                   00004000
                                   41 ********************** QUESTION 8.1 ********************************************** 00004100
                                   42 *                                                                                   00004200
                                   43 *        WRITE THE INSTRUCTION(S) NECESSARY TO SAVE 'BIGBRTHR'S                     00004300
                                   44 *        REGISTERS, ACCORDING TO CONVENTIONS.                                       00004400
                                   45 *                                                                                   00004500
                                   46 ********************************************************************************** 00004600
                                   47 *                                                                                   00004700
                                   48 *                                                                                   00004800
                                   49 *                                                                                   00004900
                                   50 ********************************************************************************** 00005000
```

```
LOC   OBJECT CODE    ADDR1 ADDR2  STMT   SOURCE STATEMENT                                          F08APR70   9/17/70

                                   52 *.......................................................................  00005200
                                   53 *                                                                        00005300
                                   54 *        ANSWER 8.1                                                      00005400
                                   55 *                                                                        00005500
                                   56 *        THE BEST ANSWER IS THIS:                                        00005600
                                   57 *                                                                        00005700
000000 90EC D00C            0000C  58          STM   R14,R12,12(R13)       SAVE 'BIGBRTHR'S REGISTERS.      00005800
                                   59 *                                                                        00005900
                                   60 *        BUT ANY INSTRUCTION OR COMBINATION OF INSTRUCTIONS THAT GIVE  00006000
                                   61 *        THE FOLLOWING RESULT, WOULD BE CORRECT.                         00006100
                                   62 *                                                                        00006200
                                   63 *        REG 13 ---> SAVE AREA PASSED BY 'BIGBRTHR'.                     00006300
                                   64 *                   +--------+                                           00006400
                                   65 *                +0 |        |        THE SAME RESULTS COULD BE GAINED 00006500
                                   66 *                   +--------+        BY USING:                          00006600
                                   67 *                   |        |                                           00006700
                                   68 *                   +--------+                ST   R14,12(R13)           00006800
                                   69 *                   |        |                ST   R15,16(R13)           00006900
                                   70 *                   +--------+                ST   R0,20(R13)            00007000
                                   71 *                +12 | REG.14 |                ST   R1,24(R13)            00007100
                                   72 *                   +--------+                ETC. ETC. ETC...           00007200
                                   73 *                +16 | REG.15 |                                           00007300
                                   74 *                   +--------+        BUT IT IS CONSIDERABLY LESS       00007400
                                   75 *                +20 | REG.0  |        EFFICIENT THAN THE STORE          00007500
                                   76 *                   +--------+        MULTIPLE INSTRUCTION.              00007600
                                   77 *                   ))))))))))                                           00007700
                                   78 *                   ((((((((((                                           00007800
                                   79 *                   +--------+                                           00007900
                                   80 *                +68 | REG.12 |                                           00008000
                                   81 *                   +--------+                                           00008100
                                   82 *                                                                        00008200
                                   83 *.......................................................................  00008300

                                   85 ***********************************************************************  00008500
                                   86 *                                                                        00008600
                                   87 *        NOW, SINCE WE ARE GOING TO USE SYMBOLIC NAMES IN THIS PROGRAM, 00008700
                                   88 *        WE NEED TO ESTABLISH ADDRESSIBILITY TO THESE NAMES FOR THE     00008800
                                   89 *        ASSEMBLER PROGRAM, SO THAT IT MAY CONVERT THEM TO BASE AND     00008900
                                   90 *        DISPLACEMENT VALUES.                                           00009000
                                   91 *                                                                        00009100
                                   92 ************************ QUESTION 8.2 ********************************  00009200
                                   93 *                                                                        00009300
                                   94 *        WRITE THE INSTRUCTION(S) NECESSARY TO SET UP A BASE REGISTER   00009400
                                   95 *        AND ESTABLISH ADDRESSABILITY FOR THE ASSEMBLER.                00009500
                                   96 *                                                                        00009600
                                   97 ***********************************************************************  00009700
                                   98 *                                                                        00009800
                                   99 *                                                                        00009900
                                  100 ***********************************************************************  00010000
```

```
 LOC  OBJECT CODE    ADDR1 ADDR2  STMT   SOURCE STATEMENT                                        F08APR70   9/17/70

                                  102 *.......................................................................  00010200
                                  103 *                                                                        00010300
                                  104 *        ANSWER 8.2                                                      00010400
                                  105 *                                                                        00010500
                                  106 *        THERE ARE ANY NUMBER OF WAYS TO ACCOMPLISH THIS, BUT THE ONE    00010600
                                  107 *        THAT I PREFER TO USE IS:                                        00010700
                                  108 *                                                                        00010800
000004 05C0                       109          BALR   RBASE,0            PUT THE ADDRESS OF 'HERE' IN BASEREG 00010900
000006                            110          USING  *,RBASE            TELL THE ASSEMBLER WHAT ADDRESS AND  00011000
                                  111 *                                  WHAT REGISTER TO USE FOR SYMBOLIC    00011100
                                  112 *                                  NAME ADDRESSING.                     00011200
                                  113 *                                                                        00011300
000006 05C0                       114          BALR   RBASE,0            YOU COULD ALSO USE THIS METHOD.      00011400
000008                            115          USING  SUBRTN01+8,RBASE                                        00011500
                                  116 *.......................................................................  00011600


                                  118 ***********************************************************************  00011800
                                  119 *                                                                        00011900
                                  120 *        NOW, SINCE WE ARE GOING TO BECOME A 'CALLING' PROGRAM WHEN      00012000
                                  121 *        WE USE THE 'EXPONENT' SUBROUTINE, WE MUST PROVIDE IT WITH       00012100
                                  122 *        A PLACE FOR IT TO SAVE OUR REGISTERS, AND, AT THE SAME TIME,    00012200
                                  123 *        WE MUST REMEMBER WHERE THE SAVE AREA PASSED BY 'BIGBRTHR'       00012300
                                  124 *        IS LOCATED. CONVENTIONS SAY THAT WE SHOULD CHAIN SAVE AREAS     00012400
                                  125 *        AS IN THE FOLLOWING DIAGRAM:                                    00012500
                                  126 *                                                                        00012600
                                  127 *        SAVE AREA IN 'BIGBRTHR'          OUR SAVE AREA ('SAVEAREA')      00012700
                                  128 *                   +--------+            +--------+                     00012800
                                  129 *                +0 | UNUSED |<--+   +-->| UNUSED |                     00012900
                                  130 *                   +--------+   |   |   +--------+                     00013000
                                  131 *                +4 |00000000|   +<-C---+--<<<<  |                     00013100
                                  132 *                   +--------+       |   +--------+                     00013200
                                  133 *                +8 |  >>>>--+------>+   |00000000|                     00013300
                                  134 *                   +--------+           +--------+                     00013400
                                  135 *               +12 | REG.14 |       +12 | EMPTY. |                     00013500
                                  136 *                   +--------+           +--------+                     00013600
                                  137 *                   ))))))))))           ))))))))))                     00013700
                                  138 *                   ((((((((((           ((((((((((                     00013800
                                  139 *                   +--------+           +--------+                     00013900
                                  140 *                                                                        00014000
                                  141 ********************** QUESTION 8.3 ********************************  00014100
                                  142 *                                                                        00014200
                                  143 *        WRITE THE CODE TO ACCOMPLISH THIS, USING THE NAME 'SAVEAREA'    00014300
                                  144 *        FOR OUR SAVE AREA.                                              00014400
                                  145 *                                                                        00014500
                                  146 ***********************************************************************  00014600
                                  147 *                                                                        00014700
                                  148 *                                                                        00014800
                                  149 *                                                                        00014900
                                  150 ***********************************************************************  00015000
```

```
LOC  OBJECT CODE    ADDR1 ADDR2  STMT   SOURCE STATEMENT                                          F08APR70   9/17/70

                                 152 *.......................................................... 00015200
                                 153 *                                                            00015300
                                 154 *        ANSWER 8.3                                          00015400
                                 155 *                                                            00015500
                                 156 *        YOUR CODE SHOULD LOOK SOMETHING LIKE THE FOLLOWING : 00015600
                                 157 *                                                            00015700
000008 41F0 C09C            000A4 158         LA    RX,SAVEAREA       ADDRESS OF OUR SAVE AREA.   00015800
00000C 50D0 C0A0            000A8 159         ST    R13,SAVEAREA+4    SAVE 'BIGBRTHR'S SAVE AREA ADDRESS. 00015900
00001C 50FD 0008            00008 160         ST    RX,8(R13)         CHAIN OUR SAVE AREA TO 'BIGBRTHR'S 00016000
000014 18DF                       161         LR    R13,RX            MAKE OUR SAVE AREA THE ACTIVE ONE. 00016100
000016 47F0 C058            00060 162         B     MAINLINE          SKIP AROUND CONSTANTS.      00016200
                                 163 *.......................................................... 00016300


                                 165 ******************************************************************** 00016500
                                 166 *                                                                    00016600
                                 167 *        THIS PROGRAM USES A SUBROUTINE WHICH WILL RAISE AN INTEGER  00016700
                                 168 *        VALUE TO A POWER REPRESENTED BY ANOTHER INTEGER .           00016800
                                 169 *                                                                    00016900
                                 170 *        FOR EXAMPLE, THE SUBROUTINE MAY BE USED TO RAISE 3 TO THE   00017000
                                 171 *        4TH POWER. THREE RAISED TO THE FOURTH POWER MEANS THAT 3 IS 00017100
                                 172 *        USED AS A FACTOR 4 TIMES. I.E. 3 X 3 X 3 X 3 = 3 TO THE 4TH. 00017200
                                 173 *                                                                    00017300
                                 174 *        +++++++++ READ THE PROLOGUE FOR THE EXPONENT SUBROUTINE NOW. 00017400
                                 175 *        IT MAY BE FOUND ON PAGE 10 OF THIS ASSEMBLY LISTING. +++++++ 00017500
                                 176 *                                                                    00017600
                                 177 *        I'LL BE WAITING HERE FOR YOU TO GET BACK......              00017700
                                 178 *                                                                    00017800
                                 179 *        USING THE INFORMATION SUPPLIED IN THE PROLOGUE, WE ARE GOING 00017900
                                 180 *        TO SET UP THE PARAMETERS AND LINKAGE NECESSARY TO USE THE   00018000
                                 181 *        ROUTINE.                                                    00018100
                                 182 *                                                                    00018200
                                 183 *        FIRST, WE WILL HAVE TO DEFINE THE PARAMETERS WHICH WE INTEND 00018300
                                 184 *        TO PASS TO THE SUBROUTINE.                                  00018400
                                 185 *                                                                    00018500
                                 186 ************************ QUESTION 8.4 ********************************** 00018600
                                 187 *                                                                    00018700
                                 188 *        LET US SUPPOSE THAT WE WANT TO RAISE 6 TO THE EIGHTH POWER. 00018800
                                 189 *        WRITE THE CONSTANTS NECESSARY TO DO THIS USING THE FORMAT   00018900
                                 190 *        DEFINED IN THE SUBROUTINE'S SPECIFICATIONS.                 00019000
                                 191 *                                                                    00019100
                                 192 ******************************************************************** 00019200
                                 193 *                                                                    00019300
                                 194 *                                                                    00019400
                                 195 ******************************************************************** 00019500
```

```
 LOC  OBJECT CODE    ADDR1 ADDR2  STMT   SOURCE STATEMENT                                    F08APR70   9/17/70

                                  197 *.......................................................... 00019700
                                  198 *         ANSWER 8.4                                        00019800
                                  199 *                                                           00019900
                                  200 *         IF YOU WROTE SOMETHING LIKE THE FOLLOWING, YOU ARE CORRECT.  00020000
000020                            201 SOMENAME DS    OD                                           00020100
000020 00000006                   202 SIX      DC    F'6'                                         00020200
000024 00000008                   203 EIGHT    DC    F'8'                                         00020300
000028 0000000000000000           204 ANSWER   DC    D'0'                                         00020400
                                  205 *                                                           00020500
                                  206 *         OR, YOU MAY HAVE WRITTEN THE FOLLOWING INSTEAD OF THE  00020600
                                  207 *         CONSTANTS CALLED 'SIX' AND 'EIGHT'.               00020700
                                  208 *                                                           00020800
000030 0000000600000008           209           DC    F'6,8'                                       00020900
                                  210 *                                                           00021000
                                  211 *         YOU MAY ALSO HAVE WRITTEN '' CNOP 0,8 '' IN PLACE OF THE  00021100
                                  212 *         '' DS 0D '', AS BOTH CAUSE THE DESIRED DOUBLE-WORD  00021200
                                  213 *         ALIGNMENT.                                        00021300
                                  214 *                                                           00021400
                                  215 *.......................................................... 00021500


                                  217 ************************ QUESTION 8.5 ********************************** 00021700
                                  218 *                                                           00021800
                                  219 *         NOTICE THAT WE USED A ''  DS 0D '' TO BEGIN THE LIST IN OUR  00021900
                                  220 *         ANSWER, WAS THIS NECESSARY? IF SO, WHY?           00022000
                                  221 *                                                           00022100
                                  222 ******************************************************************** 00022200
                                  223 *                                                           00022300
                                  224 *                                                           00022400
                                  225 *                                                           00022500
                                  226 *                                                           00022600
                                  227 ******************************************************************** 00022700
000038 0700                       228           CNOP  2,8                                          00022800
```

```
LOC   OBJECT CODE     ADDR1 ADDR2  STMT   SOURCE STATEMENT                                    F08APR70   9/17/70

                                   230 *.......................................................... 00023000
                                   231 *        ANSWER 8.5                                        00023100
                                   232 *                                                          00023200
                                   233 *        YES, IT IS NECESSARY TO CAUSE THE FIRST WORD IN THE LIST TO   00023300
                                   234 *        BE ON A DOUBLE-WORD BOUNDARY, AND THE THIRD PARAMETER IN      00023400
                                   235 *        THE LIST, WHICH MUST BE ON A DOUBLE-WORD TO BE CONTIGUOUS     00023500
                                   236 *        WITH THE SECOND PARAMETER.                                    00023600
                                   237 *                                                          00023700
                                   238 *        NOTICE WHAT HAPPENS IN THE FOLLOWING EXAMPLE, WHEN            00023800
                                   239 *        THE DOUBLE-WORD ALIGNMENT IS NOT FORCED BY THE PROGRAMMER.    00023900
                                   240 *.......................................................... 00024000
00003A 0000
00003C 00000006                    241 LIST     DC    F'6'                                        00024100
000040 00000008                    242          DC    F'8'                                        00024200
000044 00000000
000048 0000000000000000            243          DC    D'0'                                        00024300

                                   245 *++++++++++++++++++++++++++++++++++++++++++++++++++++++++++ 00024500
                                   246 *        NOTICE THAT THERE WAS PADDING GENERATED BETWEEN THE           00024600
                                   247 *        FULL-WORD '6' AND THE DOUBLE-WORD '0' BECAUSE WE DIDN'T HAVE  00024700
                                   248 *        THE FORE-SIGHT TO TAKE A LITTLE PRECAUTIONARY MEASURE LIKE    00024800
                                   249 *        A '' DS OD ''.                                    00024900
                                   250 *++++++++++++++++++++++++++++++++++++++++++++++++++++++++++ 00025000

                                   252 ************************ QUESTION 8.6 ********************************** 00025200
                                   253 *                                                          00025300
                                   254 *        OK. SO MUCH FOR ALIGNMENT CONSIDERATIONS, WE HAVE TO PASS     00025400
                                   255 *        THE PARAMETERS TO THE SUBROUTINE, USING THE SPECIFICATIONS    00025500
                                   256 *        SUPPLIED. WRITE THE CODE NECESSARY TO PASS THE PARAMETERS     00025600
                                   257 *        IN THE FOLLOWING LIST TO THE SUBROUTINE.                      00025700
                                   258 *                                                          00025800
                                   259 ********************************************************************** 00025900
                                   260 *                                                          00026000
                                   261 *                                                          00026100
                                   262 *                                                          00026200
                                   263 ********************************************************************** 00026300
000050                             264 PARMLIST DS    OD                                          00026400
000050 0000000600000008            265          DC    F'6,8'                                      00026500
000058 0000000000000000            266          DC    D'0'                                        00026600
000060                             267 MAINLINE EQU    *                                          00026700
```

```
LOC   OBJECT CODE    ADDR1 ADDR2  STMT   SOURCE STATEMENT                                  F08APR70   9/17/70

                                  269 *.................................................................. 00026900
                                  270 *                                                                  00027000
                                  271 *        ANSWER 8.6                                                00027100
                                  272 *                                                                  00027200
                                  273 *        YOU SHOULD HAVE WRITTEN EITHER:                           00027300
                                  274 *                                                                  00027400
000060 4110 C048          00050   275          LA    R1,PARMLIST                                         00027500
                                  276 *                                                                  00027600
                                  277 *        OR ELSE:                                                  00027700
                                  278 *                                                                  00027800
000064 5810 C064          0006C   279          L     R1,ANADCON                                          00027900
000068 47F0 C068          00070   280          B     ANADCON+4                                           00028000
00006C 00000050                   281 ANADCON  DC    A(PARMLIST)                                         00028100
                                  282 *                                                                  00028200
                                  283 *        REMEMBER THAT THIS WAS A 'CALL-BY-VALUE' OPERATION, SO WE 00028300
                                  284 *        WANTED TO PASS THE 'ADDRESS' OF THE PARAMETERS, RATHER    00028400
                                  285 *        THAN THE PARAMETERS THEMSELVES.                           00028500
                                  286 *.................................................................. 00028600


                                  288 *------------------------------------------------------------------ 00028800
                                  289 *        ALL RIGHT, WE HAVE SET UP THE PARAMETERS THAT THE ROUTINE 00028900
                                  290 *        REQUIRES FOR INPUT, NOW WE HAVE TO GET TO THE ROUTINE AND 00029000
                                  291 *        BACK WITH THE ANSWER. AGAIN WE WILL USE STANDARD LINKAGE  00029100
                                  292 *        CONVENTIONS.                                              00029200
                                  293 *------------------------------------------------------------------ 00029300


                                  295 ************************ QUESTION 8.7 ********************************** 00029500
                                  296 *                                                                  00029600
                                  297 *        WRITE THE CODE NECESSARY TO LINK TO THE SUBROUTINE.       00029700
                                  298 *                                                                  00029800
                                  299 *        FOLLOW STANDARD LINKAGE CONVENTIONS.                      00029900
                                  300 *                                                                  00030000
                                  301 ******************************************************************** 00030100
                                  302 *                                                                  00030200
                                  303 *                                                                  00030300
                                  304 *                                                                  00030400
                                  305 *                                                                  00030500
                                  306 *                                                                  00030600
                                  307 ******************************************************************** 00030700
```

```
LOC  OBJECT CODE    ADDR1 ADDR2  STMT   SOURCE STATEMENT                                          F08APR70   9/17/70

                                 309 *.......................................................................  00030900
                                 310 *        ANSWER 8.7                                                      00031000
                                 311 *                                                                        00031100
                                 312 *        YOU SHOULD HAVE WRITTEN SOMETHING WHICH CLOSELY RESEMBLES       00031200
                                 313 *        ONE OF THE FOLLOWING:                                           00031300
                                 314 *                                                                        00031400
000070 58F0 C0E8            0C0F0 315         L     R15,=V(EXPONENT)     &&&&&&&&&&&&&&&&&&&&&&&&&&&&&&&&&&&&  00031500
000074 05EF                       316         BALR  R14,R15              & REMEMBER, CONVENTION REQUIRES    &  00031600
                                 317 *                                   & THAT WE SET UP THE SUBROUTINE'S &  00031700
                                 318 *        OR ELSE,                   & ENTRY ADDRESS IN REGISTER 15,    &  00031800
                                 319 *                                   & AND THE RETURN POINT TO OUR      &  00031900
000076 58F0 C078            00080 320         L     R15,AVCON            & PROGRAM IN REGISTER 14.          &  00032000
00007A 05EF                       321         BALR  R14,R15              &&&&&&&&&&&&&&&&&&&&&&&&&&&&&&&&&&&&  00032100
00007C 47F0 C07C            00084 322         B     AVCON+4                                                  00032200
000080 000000C0                   323 AVCON   DC    V(EXPONENT)                                              00032300
                                 324 *.......................................................................  00032400


                                 326 *++++++++++++++++++++++++++++++++++++++++++++++++++++++++++++++++++++++  00032600
                                 327 *                                                                        00032700
                                 328 *        OF COURSE YOU COULD NOT SUCCESSFULLY WRITE:                     00032800
                                 329 *                                                                        00032900
                                 330 *        LA    R15,EXPONENT                                              00033000
                                 331 *                                                                        00033100
                                 332 *        BECAUSE ''EXPONENT'' IS AN EXTERNAL NAME, NOT RESOLVABLE AT     00033200
                                 333 *        ASSEMBLY TIME.                                                  00033300
                                 334 *                                                                        00033400
                                 335 *        NOR COULD YOU WRITE:                                            00033500
                                 336 *                                                                        00033600
                                 337 *        LA    R15,EXPONENT                                              00033700
                                 338 *        EXTRN EXPONENT                                                  00033800
                                 339 *                                                                        00033900
                                 340 *        BECAUSE, IN THIS FORM, ''EXPONENT'' IS NOT RESOLVABLE USING     00034000
                                 341 *        ANY KNOWN BASE OR ANY CALCULABLE DISPLACEMENT. ( IF THAT        00034100
                                 342 *        DIDN'T MAKE ANY SENSE, IT'S INSTRUCTOR BUGGING TIME..)          00034200
                                 343 *                                                                        00034300
                                 344 *        ANYWAY, HAVING SUCCESSFULLY GOTTEN TO THE SUBROUTINE, WE WANT   00034400
                                 345 *        TO VERIFY THAT THE ROUTINE FUNCTIONED PROPERLY BEFORE WE        00034500
                                 346 *        GO AHEAD AND USE THE DATA THAT WAS RETURNED TO US.              00034600
                                 347 *                                                                        00034700
                                 348 *        REMEMBER THAT THE SUBROUTINE RETURNED A CODE TO INFORM US       00034800
                                 349 *        OF THE RELATIVE SUCCESS OF THE OPERATION. IT WOULD BE WISE TO   00034900
                                 350 *        TEST IT AT THIS TIME.                                           00035000
                                 351 *++++++++++++++++++++++++++++++++++++++++++++++++++++++++++++++++++++++  00035100


                                 353 ************************ QUESTION 8.8 ********************************  00035300
                                 354 *        WRITE THE NECESSARY CODE TO TEST FOR SUCCESSFUL COMPLETION.     00035400
                                 355 *        YOU SHOULD CAUSE A PROGRAM CHECK IF UNSUCCESSFUL EXECUTION      00035500
                                 356 *        OCCURRED, OR CONTINUE EXECUTION OF THE DATA IS VALID.           00035600
                                 357 ***********************************************************************  00035700
                                 358 *                                                                        00035800
                                 359 *                                                                        00035900
                                 360 *                                                                        00036000
                                 361 ***********************************************************************  00036100
```

```
  LOC  OBJECT CODE    ADDR1 ADDR2  STMT   SOURCE STATEMENT                                                F08APR70   9/17/70
                                    363 *............................................................................ 00036300
                                    364 *         ANSWER 8.8                                                          00036400
                                    365 *                                                                             00036500
                                    366 *         YOU COULD HAVE WRITTEN EITHER OF THE FOLLOWING:                     00036600
                                    367 *                                                                             00036700
000084 12FF                         368           LTR   R15,R15                                                       00036800
000086 4780 C084            0008C   369           BZ    *+6                                                           00036900
00008A 0000                         370           DC    H'0'                                                          00037000
                                    371 *                                                                             00037100
                                    372 *         OR SOMETHING APPROXIMATING:                                         00037200
                                    373 *                                                                             00037300
00008C 59F0 C0EC            000F4   374           C     R15,=F'0'                                                     00037400
000090 4780 C08E            00096   375           BE    *+6                                                           00037500
000094 0000                         376           DC    H'0'                                                          00037600
                                    377 *............................................................................ 00037700


000096 0000                         379           DC    H'0'     * * * THIS WILL GET US A DUMP JUST TO SEE IF THE 00037900
                                    380 *                        * * * SUBROUTINE REALLY WORKS.                       00038000
                                    381 *                        * * * CHECK THE ANSWER IN THE DUMP TO BE SURE        00038100
                                    382 *                        * * * THAT IT DID WORK.                              00038200
000098 58DD 0004            00004   383           L     R13,4(R13)                                                    00038300
00009C 98EC D00C            0000C   384           LM    R14,R12,12(R13)    RESTORE MY CALLER'S REGISTERS.             00038400
0000A0 07FE                         385           BR    R14                 AND GO ON HOME.....                       00038500


                                    387 *&&&&&&&&&&&&&&&&&&&&&&&&&&&&&&&&&&&&&&&&&&&&&&&&&&&&&&&&&&&&&&&&&&&&&&&&&&&&&& 00038700
                                    388 *                                                                             00038800
                                    389 *         NOW THAT YOU HAVE BECOME FAMILIAR WITH THE METHOD OF USING          00038900
                                    390 *         SOMEONE ELSE'S CODE, APPLY WHAT YOU HAVE JUST LEARNED BY            00039000
                                    391 *         DOING THE LAB PROJECT ENTITLED 'THE CURRENT - POWER PROBLEM'        00039100
                                    392 *         LOCATED IN YOUR LAB GUIDE.                                          00039200
                                    393 *         GOOD LUCK.....                                                      00039300
                                    394 *                                                                             00039400
                                    395 *&&&&&&&&&&&&&&&&&&&&&&&&&&&&&&&&&&&&&&&&&&&&&&&&&&&&&&&&&&&&&&&&&&&&&&&&&&&&&& 00039500


0000A4                              397 SAVEAREA DS    18F                                                            00039700
```

```
 LOC  OBJECT CODE    ADDR1 ADDR2  STMT   SOURCE STATEMENT                                    F08APR70   9/17/70

0000F8                            399 EXPONENT CSECT                                                    00039900
                                  400 ********************************************************************** 00040000
                                  401 *                                                                  00040100
                                  402 *        THIS SUBROUTINE WILL RAISE A FIXED POINT INTEGER VALUE 'I'  00040200
                                  403 *        TO A FIXED POINT INTEGER VALUE 'J' AND RETURN THE NEW VALUE 00040300
                                  404 *        IN A DOUBLE WORD 'Y'.                                     00040400
                                  405 *                                                                  00040500
                                  406 *        THE SUBROUTINE USES STANDARD LINKAGE CONVENTIONS, AND USES 00040600
                                  407 *        PARAMETERS OF THE FOLLOWING FORM...                       00040700
                                  408 *              GENERAL REGISTER 1 ADDRESSES A LIST OF THREE CONSTANTS 00040800
                                  409 *        TWO OF WHICH ARE FULL-WORDS, AND THE LAST OF WHICH IS A   00040900
                                  410 *        DOUBLE-WORD, LOCATED ON A DOUBLE-WORD BOUNDARY. THESE WILL 00041000
                                  411 *        CONTAIN THE VALUES 'I', 'J' AND 'Y' RESPECTIVELY, WHERE 'Y' 00041100
                                  412 *        EQUALS 'I' RAISED TO THE 'J' POWER.  I.E.:                00041200
                                  413 *                                                                  00041300
                                  414 *        +-------+  +--------+--------+----------------+          00041400
                                  415 *        |   +---+->|   'I'  |  'J'   | 'Y----------Y' |          00041500
                                  416 *        +-------+  +--------+--------+----------------+          00041600
                                  417 *        REG. 1     0        4        8                16          00041700
                                  418 *                                     D<---- MUST BE ON A DOUBLE-WORD 00041800
                                  419 *                                            BOUNDARY.            00041900
                                  420 *                                                                  00042000
                                  421 *        ON RETURN, REGISTER 15 WILL CONTAIN A CONDITION CODE WHICH 00042100
                                  422 *        INDICATES THE SUCCESS OF THE OPERATION. IT WILL CONTAIN ONE 00042200
                                  423 *        OF THE FOLLOWING VALUES...                                00042300
                                  424 *                                                                  00042400
                                  425 *              0 -- OPERATION WAS SUCCESSFUL                       00042500
                                  426 *              4 -- THE VALUE OF THE EXPONENTIATION EXCEEDED ONE   00042600
                                  427 *                              REGISTER, THE RESULT MAY BE INCOMPLETE. 00042700
                                  428 *              8 -- ONE OF THE INPUT PARAMETERS WAS LOCATED ON OTHER 00042800
                                  429 *                              THAN THE REQUIRED BOUNDARY, NO      00042900
                                  430 *                              EXPONENTIATION WAS ATTEMPTED.       00043000
                                  431 *                                                                  00043100
                                  432 ********* NOTE: YOU MAY IGNORE THE REST OF THIS SUBROUTINE, AS IT IS 00043200
                                  433 *          NOT PERTINENT TO THE COMPLETION OF THIS PROJECT.        00043300
                                  434 ********************************************************************** 00043400

000005                            436 I        EQU   5              INTEGER VALUE 'I'                   00043600
000006                            437 J        EQU   6              EXPONENT VALUE 'J'                  00043700
000008                            438 Y        EQU   8              REGISTERS 8 & 9 CONTAIN 'Y'         00043800

0000F8 90EC D00C          0000C   440          STM   14,12,12(13)   SAVE CALLER'S REGISTERS             00044000
0000FC 05C0                       441          BALR  12,0           ESTABLISH ADDRESSABILITY            00044100
0000FE                            442          USING *,12           CLUE THE ASSEMBLER IN ON IT.        00044200
0000FE 41F0 C06E          0016C   443          LA    15,SAVEAR2     STANDARD                            00044300
000102 50FD 0008          00008   444          ST    15,8(13)        SAVE                               00044400
000106 50DF 0004          00004   445          ST    13,4(15)         AREA                              00044500
00010A 18DF                       446          LR    13,15             CHAINING                        00044600
00010C D703 D008 D008 00008 00008  447          XC    8(4,13),8(13)      CONVENTIONS.                   00044700
000112 1BFF                       448          SR    15,15          SET RETURN CODE = 0                 00044800
```

```
 LOC  OBJECT CODE    ADDR1 ADDR2  STMT   SOURCE STATEMENT                                          F08APR70   9/17/70

000114 1821                       450          LR    2,1            SAVE PARAMETER LIST ADDRESS.                00045000
000116 8910 001D            0001D 451          SLL   1,29           SHIFT OUT ALL BUT LOW ORDER 3 BITS          00045100
                                  452 *                            OF PARAMETER LIST ADDRESS                   00045200
00011A 1211                       453          LTR   1,1            IF THE PARAMETER LIST WAS NOT ON A          00045300
00011C 4770 C04C            0014A 454          BNZ   RETCODE8       DOUBLE-WORD BOUNDARY, RETURN AN ERROR CD.   00045400
000120 9856 2000            00000 455          LM    I,J,0(2)       GET VALUES OF 'I' AND 'J'                   00045500
000124 1255                       456          LTR   I,I            IF 'I' = 0, RETURN RESULT OF ZERO           00045600
000126 4780 C062            00160 457          BZ    YEQUALS0                                                   00045700
00012A 1B88                       458          SR    Y,Y            INITIALLY SET THE VALUE                     00045800
00012C 4190 0001            00001 459          LA    Y+1,1           OF 'Y' TO 1                                00045900
000130 1266                       460          LTR   J,J            IF EXPONENT EQUALS ZERO,                    00046000
000132 4780 C044            00142 461          BZ    RETURN1        RETURN A VALUE OF 1                         00046100

                                  463 *                                                                        00046300
                                  464 *        THIS PART OF THE ROUTINE DOES ALL THE DIRTY WORK OF             00046400
                                  465 *        THE EXPONENTIATION.                                             00046500
                                  466 *                                                                        00046600
000136 1C85                       467 RAISE    MR    Y,I            RAISE 'I' TO THE 'J'-TH POWER               00046700
000138 1288                       468          LTR   Y,Y            TEST FOR VALUE IN EXCESS OF 32 BITS.        00046800
00013A 4770 C050            0014E 469          BNZ   RETCODE4       FOUND, SET RETURN CODE = 4.                 00046900
00013E 4660 C038            00136 470          BCT   J,RAISE        NO OVERFLOW, CONTINUE WITH EXPONENTIATION   00047000

000142                            472 RETURN1  EQU   *                                                        00047200
000142 9089 2008            00008 473          STM   Y,Y+1,8(2)     RETURN VALUE OF 'Y'                         00047300
000146 47F0 C054            00152 474          B     RETCODE0       AND RETURN A CODE OF ZERO                   00047400

00014A 41FF 0004            00004 476 RETCODE8 LA    15,4(15)       SET RETURN CODE TO 8                        00047600
00014E 41FF 0004            00004 477 RETCODE4 LA    15,4(15)       SET RETURN CODE TO 4                        00047700
000152 58DD 0004            00004 478 RETCODE0 L     13,4(13)                                                   00047800
000156 58ED 000C            0000C 479          L     14,12(13)      RESTORE 14                                  00047900
00015A 980C D014            00014 480          LM    0,12,20(13)    RESTORE REMAINING REGISTERS                 00048000
00015E 07FE                       481          BR    14             RETURN TO USER                              00048100

000160 D707 2008 2008 00008 00008 483 YEQUALS0 XC    8(8,2),8(2)    SET 'Y' EQUAL TO ZERO                       00048300
000166 47F0 C054            00152 484          B     RETCODE0       RETURN A CONDITION CODE OF ZERO             00048400

00016C                            486 SAVEAR2  DS    18F                                                        00048600
000000                            487          END   SUBRTN01                                                   00048700
0000F0 00000000                   488                =V(EXPONENT)
0000F4 00000000                   489                =F'0'
```

9/17/70

| POS.ID | REL.ID | FLAGS | ADDRESS |
|---|---|---|---|
| 01 | 01 | 0C | 00006C |
| 01 | 02 | 1C | 000080 |
| 01 | 02 | 1C | 0000F0 |

9/17/70

| SYMBOL | LEN | VALUE | DEFN | REFERENCES | | | | | | | |
|---|---|---|---|---|---|---|---|---|---|---|---|
| ANADCON | 00004 | 00006C | 00281 | 0279 | 0280 | | | | | | |
| ANSWER | 00008 | 000028 | 00204 | | | | | | | | |
| AVCON | 00004 | 000080 | 00323 | 0320 | 0322 | | | | | | |
| EIGHT | 00004 | 000024 | 00203 | | | | | | | | |
| EXPONENT | 00001 | 0000F8 | 00399 | | | | | | | | |
| I | 00001 | 000005 | 00436 | 0455 | 0456 | 0456 | 0467 | | | | |
| J | 00001 | 000006 | 00437 | 0455 | 0460 | 0460 | 0470 | | | | |
| LIST | 00004 | 00003C | 00241 | | | | | | | | |
| MAINLINE | 00001 | 000060 | 00267 | 0162 | | | | | | | |
| PARMLIST | 00008 | 000050 | 00264 | 0275 | 0281 | | | | | | |
| RAISE | 00002 | 000136 | 00467 | 0470 | | | | | | | |
| RBASE | 00001 | 00000C | 00003 | 0109 | 0110 | 0114 | 0115 | | | | |
| RETCODE0 | 00004 | 000152 | 00478 | 0474 | 0484 | | | | | | |
| RETCODE4 | 00004 | 00014E | 00477 | 0469 | | | | | | | |
| RETCODE8 | 00004 | 00014A | 00476 | 0454 | | | | | | | |
| RETURN1 | 00001 | 000142 | 00472 | 0461 | | | | | | | |
| RX | 00001 | 00000F | 00004 | 0158 | 0160 | 0161 | | | | | |
| R0 | 00001 | 000000 | 00005 | | | | | | | | |
| R1 | 00001 | 000001 | 00006 | 0275 | 0279 | | | | | | |
| R10 | 00001 | 00000A | 00013 | | | | | | | | |
| R11 | 00001 | 00000B | 00014 | | | | | | | | |
| R12 | 00001 | 00000C | 00015 | 0058 | 0384 | | | | | | |
| R13 | 00001 | 00000D | 00016 | 0058 | 0159 | 0160 | 0161 | 0383 | 0383 | 0384 | |
| R14 | 00001 | 0000CE | 00017 | 0058 | 0316 | 0321 | 0384 | 0385 | | | |
| R15 | 00001 | 00000F | 00018 | 0315 | 0316 | 0320 | 0321 | 0368 | 0368 | 0374 | |
| R2 | 00001 | 000002 | 00007 | | | | | | | | |
| R3 | 00001 | 000003 | 00008 | | | | | | | | |
| R4 | 00001 | 000004 | 00009 | | | | | | | | |
| R5 | 00001 | 000005 | 00010 | | | | | | | | |
| R6 | 00001 | 000006 | 00011 | | | | | | | | |
| R7 | 00001 | 000007 | 00012 | | | | | | | | |
| SAVEAREA | 00004 | 0000A4 | 00397 | 0158 | 0159 | | | | | | |
| SAVEAR2 | 00004 | 00016C | 00486 | 0443 | | | | | | | |
| SIX | 00004 | 000020 | 00202 | | | | | | | | |
| SOMENAME | 00008 | 000020 | 00201 | | | | | | | | |
| SUBRTN01 | 00001 | 000000 | 00002 | 0115 | 0487 | | | | | | |
| Y | 00001 | 000008 | 00438 | 0458 | 0458 | 0459 | 0467 | 0468 | 0468 | 0473 | 0473 |
| YEQUALS0 | 00006 | 000160 | 00483 | 0457 | | | | | | | |

NO STATEMENTS FLAGGED IN THIS ASSEMBLY
*STATISTICS* SOURCE RECORDS (SYSIN) = 487
*OPTIONS IN EFFECT* LIST, NODECK, LOAD, NORENT, XREF, NOTEST, ALGN, OS, LINECNT = 55
544 PRINTED LINES

```
F44-LEVEL LINKAGE EDITOR OPTIONS SPECIFIED MAP,LET,LIST,NCAL
          VARIABLE OPTIONS USED -  SIZE=(45056,6144)-          DEFAULT OPTION(S) USED
IEW0000             ENTRY UTILITY

                                                  MODULE MAP

  CONTROL SECTION                        ENTRY

    NAME    ORIGIN  LENGTH                 NAME   LOCATION     NAME   LOCATION     NAME   LOCATION     NAME   LOCATION

  SUBRTN01      00      F8
  EXPONENT      F8      BC
  UTILITY      1B8     5A0
                                         PRINT        21A    PCHKRETN     476

 ENTRY ADDRESS      1B8
 TOTAL LENGTH       758

****GO        DOES NOT EXIST BUT HAS BEEN ADDED TO DATA SET
```

```
F.P. REGS.  0D.60E900 00000042   F4.174278 9870260F   00.000008 00000000   00.000000 00000000

REGS 0-7     FFFFFF2E 0005F8F8 0001DC4C 00000000    00015110 000153C0 0001D7C0 000169E0
REGS 8-15    0001DC30 00000000 0001DC58 00000000    6F05F8B0 0005F94C 4F05F924 00000000

000000    00000000 00000000 00000000 00000000    0005F8A8 00000000 FF060000 80000000  *...................8.............*
000020    00040003 50006A3E FFD50001 4F05F940    0000FF00 00000000 FF040233 A000C54A  *.........N....9 ..............E.*
000040    00000000 04000000 00001468 00005920    083D5600 0000996C 00040000 00007498  *................................*
000060    00040000 00007BC8 00040000 00007588    00000000 00012D10 00040000 0000751A  *.......H........................*

05F8A0    A0E1A0E0 924CA1BE 90ECD00C 05C005C0    41F0C09C 50D0C0A0 50FD0008 18DF47F0  *..... ...........0.............0*
05F8C0    C0588056 41DD0008 00000006 00000008    00000000 00000000 00000006 000000C8  *................................*
05F8E0    07000000 00000006 00000008 00000000    00000000 00000000 00000006 00000008  *................................*
05F900    00000000 0019A100 4110C048 5810C064    47F0C068 0005F8F8 58F0C0E8 05EF58F0  *..................0....88.0.Y...0*
05F920    C07805EF 47F0C07C 0005F9A0 12FF4780    C0840000 59F0C0EC 4780C08E 00000000  *.....0....9..........0..........*
05F940    58DD0004 98ECD00C 07FEC000 953A4740    0006BF68 0005FA14 4F05F924 0005F9A0  *............... ...........9...9.*
05F960    FFFFFF2E 0005F8F8 0001DC4C 00000000    00015110 000153C0 0001D7C0 000169E0  *......88..................P.....*
05F980    0001DC30 00000000 0001DC58 00000000    6F05F8B0 80564740 0005F9A0 00000000  *...................8.... ..9.....*
05F9A0    90ECD00C 05C041F0 C06E50FD 000850DF    C00418DF D703D008 D0081BFF 18218910  *.......0............P...........*
05F9C0    001D1211 4770C04C 98562000 12554780    C0621B88 41900001 12664780 C0441C85  *................................*
05F9E0    12884770 C0504660 C0389089 200847F0    C05441FF 000441FF 000458DD 000458ED  *................0................*
05FA00    0000980C D01407FE D7072008 200847F0    C0549104 70044710 0005F94C 00000000  *........P......0..........9.....*
05FA20    C02705EF D203C024 94FE910C 80564740    946AD503 701494FE 47809470 58F094DE  *....K........... ..N..........0..*
05FA40    07FF58F0 94E605EF 48BCA000 41A0A002    90ABC024 185D58D0 C03441D0 D00058F0  *...0.W........................0*
05FA60    90ECD00C 05C004F0 07004110 C0100511    0F05FB04 7FFF0A0E 58B00010 9110B074  *.......0........................*

060C20    4A009BDE 40050000 47F095C6 48609BFF    8A6C0001 4770969E 48609C26 41660001  *.... ....0.F....................*
```



**********

```
BBBBBBBBBBB   RRRRRRRRRRR    AAAAAAAAAA   NN        NN   CCCCCCCCCC   HH        HH  EEEEEEEEEEEE   SSSSSSSSSS
BBBBBBBBBBBB  RRRRRRRRRRRR  AAAAAAAAAAAA  NNN       NN  CCCCCCCCCCCC  HH        HH  EEEEEEEEEEEE  SSSSSSSSSSSS
BB        BB  RR        RR  AA        AA  NNNN      NN  CC        CC  HH        HH  EE            SS        SS
BB        BB  RR        RR  AA        AA  NN NN     NN  CC            HH        HH  EE            SS
BB        BB  RR        RR  AA        AA  NN  NN    NN  CC            HH        HH  EE            SSS
BBBBBBBBBB    RRRRRRRRRRRR  AAAAAAAAAAAA  NN   NN   NN  CC            HHHHHHHHHHHH  EEEEEEEE       SSSSSSSS
BBBBBBBBBB    RRRRRRRRRRR   AAAAAAAAAAAA  NN    NN  NN  CC            HHHHHHHHHHHH  EEEEEEEE        SSSSSSSS
BB        BB  RR    RR      AA        AA  NN     NN NN  CC            HH        HH  EE                    SSS
BB        BB  RR     RR     AA        AA  NN      NNNN  CC            HH        HH  EE                     SS
BB        BB  RR      RR    AA        AA  NN       NNN  CC        CC  HH        HH  EE            SS        SS
BBBBBBBBBBBB  RR       RR   AA        AA  NN        NN  CCCCCCCCCCCC  HH        HH  EEEEEEEEEEEE  SSSSSSSSSSSS
BBBBBBBBBBB   RR        RR  AA        AA  NN         N   CCCCCCCCCC   HH        HH  EEEEEEEEEEEE   SSSSSSSSSS
```

```
 9999999999
999999999999
99        99
99        99
99        99
999999999999
999999999999
          99
          99
99        99
999999999999
 9999999999
```



**********

EXTERNAL SYMBOL DICTIONARY

| SYMBOL | TYPE | ID | ADDR | LENGTH | LD ID |
|---|---|---|---|---|---|
| BRANCHES | SD | 01 | 000000 | 000232 | |
| PCHKRETN | ER | 02 | | | |

```
 LOC  OBJECT CODE    ADDR1 ADDR2  STMT   SOURCE STATEMENT                                          F08APR70   9/17/70

000000                                2 BRANCHES CSECT                                                          00000200
000000 90EC D00C            0000C     3          STM   14,12,12(13)     SAVE THE CALLER'S REGISTERS             00000300
000004 05C0                           4          BALR  12,0             ESTABLISH THE PROGRAM BASE REGISTER     00000400
000006                                5          USING *,12             TELL THE ASSEMBLER ABOUT IT             00000500
000006 41F0 C1D2            001D8     6          LA    15,BRSAVE        MY SAVE AREA ADDRESS                    00000600
00000A 50DF 0004            00004     7          ST    13,4(15)         BACKWARD CHAIN                          00000700
00000E 50FD 0008            00008     8          ST    15,8(13)         FORWARD CHAIN                           00000800
000012 18DF                           9          LR    13,15            ESTABLISH MY SAVE AREA                  00000900
000014 D703 D008 D008 00008 00008    10          XC    8(4,13),8(13)    TERMINATE THE FORWARD CHAIN             00001000
                                    11 *         AT THIS POINT, STANDARD ENTRY CONVENTIONS ARE COMPLETE.         00001100
                                    12           PRINT OFF              A LITTLE SLEIGHT OF HAND...             00001200
00002E 47F0 C19E            001A4   19           B     LOCATION            SKIP ALL THE OTHER CODE (ILLUS.ONLY) 00001900
```

```
LOC  OBJECT CODE    ADDR1 ADDR2  STMT   SOURCE STATEMENT                                    F08APR70   9/17/70

                                  21 *                    ********************************************** 00002100
                                  22 *                    * BRANCHING AND SWITCHING WORK PROJECT 1.    * 00002200
                                  23 *                    * --------- --- --------- ---- ------- --     * 00002300
                                  24 *                    ********************************************** 00002400


                                  26 *+++++++++++++++++++++++++++++++++++++++++++++++++++++++++++++++++++++ 00002600
                                  27 *        THIS PROJECT CONTAINS EXAMPLES OF THE 'LOGICAL' INSTRUCTIONS * 00002700
                                  28 *        (AND, OR, EXCLUSIVE OR, AND TEST), SHOWING THE WAY IN WHICH   00002800
                                  29 *        THEY MAY BE USED TO MANIPULATE ''LOGICAL PROGRAM SWITCHES''.  00002900
                                  30 *                                                                      00003000
                                  31 *        IT ALSO CONTAINS EXAMPLES OF THE VARIOUS BRANCH INSTRUCTIONS, 00003100
                                  32 *        SHOWING SOME OF THE WAYS THEY MAY BE USED TO CONTROL PROGRAM  00003200
                                  33 *        LOGIC FLOW.                                                   00003300
                                  34 *                                                                      00003400
                                  35 *        --- NOTE --- THE EXAMPLES CONTAINED HEREIN ARE NOT INTENDED   00003500
                                  36 *        TO CONSTITUTE ANY COMPLETE PROGRAM. RATHER, THEY ARE MERELY   00003600
                                  37 *        DISCRETE CODING SAMPLES, AND DO NOT NECESSARILY RELATE TO     00003700
                                  38 *        ANY OF THE OTHER EXAMPLES IN THE PROJECT.                     00003800
                                  39 *        BECAUSE OF THIS, EACH SHOULD BE EXAMINED SEPARATELY           00003900
                                  40 *        AND ALL QUESTIONS CONCERNING ANY SINGLE EXAMPLE SHOULD BE     00004000
                                  41 *        COMPLETED (AND THEIR ANSWERS UNDERSTOOD) BEFORE GOING ON TO   00004100
                                  42 *        THE NEXT EXAMPLE.                                             00004200
                                  43 *        IF YOU DON'T UNDERSTAND, BUG YOUR INSTRUCTOR FOR AN ANSWER,   00004300
                                  44 *        THAT'S WHAT HE GETS PAID FOR...                               00004400
                                  45 *                                                                      00004500
                                  46 *        FIRST, A BIT OF PRELIMINARY INFORMATION. THROUGHOUT THIS      00004600
                                  47 *        SECTION, WE'RE GOING TO BE USING THE 4-BYTE 'NO-OPERATION'    00004700
                                  48 *        INSTRUCTION, WHICH IS A BRANCH HAVING A CONDITION MASK OF     00004800
                                  49 *        ZERO, WHICH MEANS THAT NO BRANCH WILL EVER BE MADE WHEN THE   00004900
                                  50 *        INSTRUCTION IS EXECUTED. DOESN'T SOUND TOO USEFUL ?? WELL,    00005000
                                  51 *        JUST WAIT AND SEE...                                          00005100
                                  52 *+++++++++++++++++++++++++++++++++++++++++++++++++++++++++++++++++++++ 00005200
```

```
LOC  OBJECT CODE    ADDR1 ADDR2  STMT   SOURCE STATEMENT                                F08APR70   9/17/70

                                  54 *-------------------------------------------------------------------- 00005400
                                  55 *        LET US FIRST CONSIDER THE MEANING OF THE TERM 'SWITCH' AS      00005500
                                  56 *        APPLIED TO PROGRAMMING.                                        00005600
                                  57 *                                                                       00005700
                                  58 *        OF COURSE, YOU ARE FAMILIAR WITH AT LEAST ONE FORM OF SWITCH,  00005800
                                  59 *        THAT OF A LIGHT SWITCH, WHICH ROUTES THE FLOW OF ELECTRIC      00005900
                                  60 *        CURRENT EITHER TO THE LIGHT BULB, OR TO NOWHERE, DEPENDING     00006000
                                  61 *        UPON THE SETTING OF THE SWITCH.                                00006100
                                  62 *                                                                       00006200
                                  63 *        SIMILARLY, IN PROGRAMMING, A SWITCH IS AN INSTRUCTION WHICH    00006300
                                  64 *        ROUTES THE FLOW OF INSTRUCTION EXECUTION ONE WAY OR ANOTHER,   00006400
                                  65 *        DEPENDING ON THE CURRENT SETTING OF THE 'PROGRAM SWITCH'.      00006500
                                  66 *                                                                       00006600
                                  67 *        THE MOST BASIC FORM OF SWITCH IS THE BRANCH INSTRUCTION        00006700
                                  68 *        WHOSE CONDITION MASK IS DYNAMICALLY ALTERED AT PROGRAM         00006800
                                  69 *        EXECUTION TIME. CONSIDER THE FOLLOWING EXAMPLE:                00006900
                                  70 *                                                                       00007000
000032 4700 C038          0003E   71 SWITCH   BC     0,DONTDOIT        1                                   00007100
000036 96F0 C02D     00033        72          OI     SWITCH+1,X'F0'    2                                   00007200
00003A 47F0 C02C          00032   73          B      SWITCH            3                                   00007300
00003E 940F C02D     00033        74 DONTDOIT NI     SWITCH+1,X'0F'    4                                   00007400
                                  75 *-------------------------------------------------------------------- 00007500


                                  77 ************************ QUESTION  9.1 ******************************** 00007700
                                  78 *        USING THE NUMBERS WHICH APPEAR IN THE COMMENTS FIELDS          00007800
                                  79 *        IN THE EXAMPLE ABOVE, DETERMINE THE ORDER OF EXECUTION         00007900
                                  80 *        OF THE INSTRUCTIONS IN THAT EXAMPLE. ASSUME THAT 'SWITCH'      00008000
                                  81 *        IS EXECUTED FIRST. WRITE YOUR ANSWER BELOW BEFORE GOING        00008100
                                  82 *        ON TO THE NEXT PAGE.                                           00008200
                                  83 ******************************************************************** 00008300
                                  84 *                                                                       00008400
                                  85 *                                                                       00008500
                                  86 *                                                                       00008600
                                  87 ******************************************************************** 00008700
```

```
LOC   OBJECT CODE    ADDR1 ADDR2  STMT   SOURCE STATEMENT                                          F08APR70   9/17/70

                                   89 *.......................................................... 00008900
                                   90 *        ANSWER 9.1                                          00009000
                                   91 *                                                            00009100
                                   92 *        THE INSTRUCTIONS WILL EXECUTE IN THE SEQUENCE: 1,2,3,1,4.  00009200
                                   93 *                                                            00009300
                                   94 *        THIS IS TRUE BECAUSE THE THIRD INSTRUCTION CHANGES THE MASK  00009400
                                   95 *        OF 'SWITCH', CAUSING IT TO BRANCH THE SECOND TIME IT IS  00009500
                                   96 *        EXECUTED. THE INSTRUCTION NUMBERED '4' RESETS THE MASK TO IT'S 00009600
                                   97 *        ORIGINAL CONDITION.                                 00009700
                                   98 *.......................................................... 00009800


                                  100 ************************ QUESTION 9.2 ******************************** 00010000
                                  101 *        REMEMBERING WHAT YOU HAVE JUST SEEN, LOOK AT THE FOLLOWING  00010100
                                  102 *        EXAMPLE AND LIST THE ORDER IN WHICH THE INSTRUCTIONS WILL  00010200
                                  103 *        BE EXECUTED.                                        00010300
                                  104 *        ASSUME THAT 'SWITCH2' WILL BE EXECUTED FIRST.       00010400
                                  105 ********************************************************************** 00010500
                                  106 *                                                            00010600
                                  107 *                                                            00010700
                                  108 *                                                            00010800
                                  109 ********************************************************************** 00010900
000042 47F0 C044          0004A   110 SWITCH2  BC     15,BYPASSIT          1                      00011000
000046 47F0 C04C          00052   111          B      BEGONE               2                      00011100
00004A 97F0 C03D    00043         112 BYPASSIT XI    SWITCH2+1,X'F0'      3                      00011200
00004E 47F0 C03C          00042   113          B      SWITCH2              4                      00011300
000052                            114 BEGONE   EQU    *                    5                      00011400
```

```
LOC  OBJECT CODE    ADDR1 ADDR2  STMT   SOURCE STATEMENT                                          F08APR70   9/17/70

                                 116 *.......................................................... 00011600
                                 117 *        ANSWER 9.2                                          00011700
                                 118 *                                                            00011800
                                 119 *        THE INSTRUCTIONS WILL EXECUTE IN THE ORDER 1,3,4,1,2,5 00011900
                                 120 *                                                            00012000
                                 121 *        THIS IS TRUE BECAUSE THE EXECUTION OF 'BYPASSIT' WILL 00012100
                                 122 *        CHANGE 'SWITCH2' TO A ''NOP'' INSTRUCTION AND THE SECOND 00012200
                                 123 *        TIME THAT IT (SWITCH2) IS EXECUTED, WE FALL THROUGH INTO 00012300
                                 124 *        THE BRANCH TO 'BEGONE'.                             00012400
                                 125 *.......................................................... 00012500


                                 127 *++++++++++++++++++++++++++++++++++++++++++++++++++++++++++++ 00012700
                                 128 *        AN INSTRUCTION WHICH IS IDEALLY SUITED TO THIS KIND OF 00012800
                                 129 *        OPERATION IS THE ONE CALLED 'TEST AND SET', WHICH SETS THE 00012900
                                 130 *        TESTED BYTE OF STORAGE TO X'FF' AND SETS THE CONDITION CODE 00013000
                                 131 *        BASED UPON THE VALUE OF THE BYTE BEFORE THE 'TS' INSTRUCTION 00013100
                                 132 *        WAS EXECUTED.                                       00013200
                                 133 *++++++++++++++++++++++++++++++++++++++++++++++++++++++++++++ 00013300
000052 9300 C060     00066       134 TEST@SET TS     BYTE0        1                               00013400
000056 4740 C058            0005E 135         BC     4,WALKONBY   2                               00013500
00005A 47F0 C04C            00052 136         B      TEST@SET     3                               00013600
00005E 9400 C060     00066       137 WALKONBY NI     BYTE0,0      4                               00013700
000062 47F0 C072            00078 138         B      EXAMPLE1     5                               00013800
000066 00                        139 BYTE0    DC     X'00'                                        00013900


                                 141 ************************** QUESTION 9.3 ************************** 00014100
                                 142 *        WHAT WILL BE THE EXECUTION SEQUENCE OF THE PRECEEDING CODE?? 00014200
                                 143 ************************************************************** 00014300
                                 144 *                                                            00014400
                                 145 ************************************************************** 00014500
```

```
LOC  OBJECT CODE    ADDR1 ADDR2  STMT   SOURCE STATEMENT                                    F08APR70   9/17/70

                                 147 *.......................................................... 00014700
                                 148 *        ANSWER 9.3                                        00014800
                                 149 *                                                          00014900
                                 150 *        THE INSTRUCTIONS WILL EXECUTE IN THE ORDER: 1,2,3,1,2,4,5.  00015000
                                 151 *                                                          00015100
                                 152 *        THE FIRST TIME THE 'TS' IS EXECUTED, IT MAKES 'BYTEO' EQUAL  00015200
                                 153 *        X'FF', BUT SINCE BITO OF 'BYTEO' WAS A '0', THE CONDITION  00015300
                                 154 *        CODE = 8, SO WE DON'T BRANCH AT INSTRUCTION # 2. ON THE NEXT  00015400
                                 155 *        EXECUTION OF THE 'TS', THE CONDITIONS ARE REVERSED, AND WE  00015500
                                 156 *        DO BRANCH TO 'WALKONBY'.                          00015600
                                 157 *------------------------------------------------------------- 00015700


                                 159 *------------------------------------------------------------- 00015900
                                 160 *                                                          00016000
                                 161 *        THE FOLLOWING TWO SAMPLES ARE SIMILAR TO THE TWO YOU WERE  00016100
                                 162 *        JUST QUESTIONED ABOUT IN QUESTION 9.2, BUT NOTICE THAT THEY  00016200
                                 163 *        USE THE 'EXCLUSIVE OR' INSTRUCTION TO ALTERNATE THE  00016300
                                 164 *        CONDITION MASK IN THE SWITCH FROM 0 TO 15 AND BACK TO 0.  00016400
                                 165 *                                                          00016500
                                 166 *        THIS EXAMPLE CAUSES A BRANCH EACH ODD-NUMBERED TIME THAT  00016600
                                 167 *        IT IS EXECUTED, ASSUMING OF COURSE, THAT THEY ARE BRANCHED  00016700
                                 168 *        AT A LATER DATE.                                  00016800
                                 169 *                                                          00016900
25
000067 00
000068 97F0 C067     0006D       170 OPCDSW1  XI    *+5,X'F0'                                   00017000
00006C 4700 C082           00088 171          BC    0,ADDRESS                                   00017100
                                 172 *                                                          00017200
                                 173 *        AND THIS ONE BRANCHES EVERY EVEN-NUMBERED TIME.   00017300
                                 174 *                                                          00017400
00007C 97F0 C06F     00075       175 OPCDSW2  XI    *+5,X'F0'                                   00017500
000074 47F0 C082           00088 176          BC    15,ADDRESS                                  00017600
                                 177 *                                                          00017700
                                 178 *                                                          00017800
                                 179 *        NOTICE THAT THE ONLY SIGNIFICANT DIFFERENCE BETWEEN THE TWO  00017900
                                 180 *        SAMPLES IS THE INITIAL SETTING OF THE SWITCH'S CONDITION MASK. 00018000
                                 181 *------------------------------------------------------------- 00018100
```

```
LOC   OBJECT CODE    ADDR1 ADDR2  STMT   SOURCE STATEMENT                                F08APR70   9/17/70

                                  183 *-------------------------------------------------------------------- 00018300
                                  184 *        IF YOU HAVE BEEN SUCCESSFULLY FOLLOWING WHAT WE'VE BEEN        00018400
                                  185 *        DOING, YOU HAVE A GOOD KNOWLEDGE OF HOW WE MAY ALTER           00018500
                                  186 *        BRANCH INSTRUCTION'S MASK TO CREATE A ''PROGRAM SWITCH''.      00018600
                                  187 *                                                                       00018700
                                  188 *        O.K. LOOK, IF YOU WILL, AT THE FOLLOWING TWO EXAMPLES.         00018800
                                  189 *        NOTE THAT THEY ARE SIMILAR TO THE LAST TWO IN THAT THEY        00018900
                                  190 *        MODIFY AN INSTRUCTION. HOWEVER, THEY MODIFY THE OPERATION      00019000
                                  191 *        CODE PORTION OF THE INSTRUCTION, WHERE THE PREVIOUS SAMPLES    00019100
                                  192 *        MODIFIED THE BRANCH CONDITION MASK.                            00019200
                                  193 ******** THE QUESTION BELOW IS DESIGNED TO HELP EXPLAIN THE CODE, SO     00019300
                                  194 *        ANSWER THE QUESTION NOW.                                       00019400
                                  195 *                                                                       00019500
                                  196 *        THIS ONE WILL BRANCH ONLY THE FIRST TIME IT IS EXECUTED.       00019600
000078 9706 C072     00078        197 EXAMPLE1 XI    *,6                                                     00019700
00007C 4770 C082           00088  198          BC    7,ADDRESS                                               00019800
                                  199 *                                                                       00019900
                                  200 *        AND THIS ONE WILL BRANCH EVERY TIME BUT THE FIRST.             00020000
                                  201 *                                                                       00020100
000080 9706 C07A     00080        202          XI    *,6                                                     00020200
000084 4780 C082           00088  203          BC    8,ADDRESS                                               00020300
                                  204 *                                                                       00020400
                                  205 *-------------------------------------------------------------------- 00020500


                                  207 ************************ QUESTION 9.4 ********************************** 00020700
                                  208 *                                                                       00020800
                                  209 *        --- FILL IN THE BLANKS. ---                                    00020900
                                  210 *                                                                       00021000
                                  211 *        ALL OF THE QUESTIONS IN THIS BLOCK REFER TO 'EXAMPLE1' ABOVE.  00021100
                                  212 *                                                                       00021200
                                  213 *        IN ORDER TO UNDERSTAND WHAT HAPPENED IN THE LAST TWO           00021300
                                  214 *        EXAMPLES, IT IS NECESSARY TO BE ABLE TO SEE WHAT WAS DONE      00021400
                                  215 *        TO THEIR OPERATION CODES. CONSIDER WHAT WILL BE THE            00021500
                                  216 *        RESULT WHEN WE EXCLUSIVE OR THE 'XI' OP-CODE (X'97')           00021600
                                  217 *        WITH THE VALUE OF THE IMMEDIATE DATA IN THE INSTRUCTION        00021700
                                  218 *        (X'06'). THE CALCULATED RESULT IS X'__', WHICH IS THE          00021800
                                  219 *        OPERATION CODE FOR THE _______________ INSTRUCTION.            00021900
                                  220 *                                                                       00022000
                                  221 *        WHEN WE EXECUTE THE RESULTING INSTRUCTION, WHICH IS:           00022100
                                  222 *                                                                       00022200
                                  223 *        __     *,6     (SUBSTITUTE THE MNEMONIC FOR THE YOUR LAST      00022300
                                  224 *                        ANSWER IN THIS OP CODE FIELD.)                 00022400
                                  225 *                                                                       00022500
                                  226 *        WE CAN SEE THAT THE CONDITION CODE SETTING FOR THE NEW         00022600
                                  227 *        INSTRUCTION IS EQUAL TO __ AND THEREFORE, THE INSTRUCTION:     00022700
                                  228 *                                                                       00022800
                                  229 *        BC     7,ADDRESS                                               00022900
                                  230 *                                                                       00023000
                                  231 *        --- CIRCLE THE CORRECT ONE ---                                 00023100
                                  232 *                                                                       00023200
                                  233 *        WILL (BRANCH/NOT BRANCH)                                       00023300
                                  234 *                                                                       00023400
                                  235 ******************************************************************** 00023500
```

```
LOC  OBJECT CODE    ADDR1 ADDR2  STMT   SOURCE STATEMENT                                    F08APR70   9/17/70

                                 237 *.......................................................... 00023700
                                 238 *        ANSWER 9.4                                        00023800
                                 239 *                                                          00023900
                                 240 *        X'91'  -- X'97' EXCLUSIVE OR'ED WITH X'06'.       00024000
                                 241 *        TEST UNDER MASK  -- THE INSTRUCTION WHOSE OP CODE = X'91'.  00024100
                                 242 *        TM  -- THE MNEMONIC FOR TEST UNDER MASK           00024200
                                 243 *        0  (ZERO)  -- THE CONDITION SET WHEN '' TM *,6 '' IS EXECUTED. 00024300
                                 244 *        NOT BRANCH  -- BECAUSE THE MASK VALUE OF 7 WILL NOT ALLOW  00024400
                                 245 *                       THE BRANCH TO BE TAKEN, SINCE BOTH BITS 5 & 6  00024500
                                 246 *                       ARE ZERO IN THE OP CODE.              00024600
                                 247 *                                                          00024700
                                 248 ******** WHEN YOU REACH THIS POINT, DISPLAY THE GREEN SIDE OF THE  00024800
                                 249 *        "ANSWER CUE".                                     00024900
                                 250 *.......................................................... 00025000


                                 252 *------------------------------------------------------------------ 00025200
                                 253 *                                                          00025300
                                 254 *        THE PRECEEDING WERE HOPEFULLY INTERESTING AND WERE COMPLETELY  00025400
                                 255 *        VALID METHODS OF IMPLEMENTING ''PROGRAM SWITCHES''. BUT,  00025500
                                 256 *        THEY HAVE ONE MAJOR DRAWBACK, WHICH WE WILL NOW EXAMINE.  00025600
                                 257 *                                                          00025700
                                 258 *        IN THE SECTION ON SUBROUTINE USAGE, WE DISCUSSED SOME  00025800
                                 259 *        PROGRAM ATTRIBUTES, WHICH WE CALLED: NON-REUSABLE,  00025900
                                 260 *        SERIALLY REUSABLE, RE-ENTRANT, AND REFRESHABLE. THE EXISTENCE  00026000
                                 261 *        OF ALL 4 OF THESE WAS DETERMINED ON THE BASIS OF WHETHER OR  00026100
                                 262 *        NOT THE PROGRAMMER DID ANY DIRECT MODIFICATION OF THE  00026200
                                 263 *        STORAGE ALLOCATED TO HIS PROGRAM.                 00026300
                                 264 *                                                          00026400
                                 265 *        IF YOU CONSIDER WHAT WE HAVE DONE IN ALL THE PRECEEDING  00026500
                                 266 *        EXAMPLES, YOU WILL NOTICE THAT EACH ONE MODIFIED NOT JUST  00026600
                                 267 *        A CONSTANT, BUT THE CODE ITSELF. AN OBVIOUS VIOLATION  00026700
                                 268 *        OF RE-ENTRANCE, AND, IF NOT PROPERLY INITIALIZED,  00026800
                                 269 *        A VIOLATION OF EVEN REUSABILITY.                  00026900
                                 270 *                                                          00027000
                                 271 *        IF YOU DO NOT RECALL THE MEANING OF THE TERMS  00027100
                                 272 *        'REUSABLE' AND 'RE-ENTRANT', NOW WOULD BE A GOOD  00027200
                                 273 *        TIME TO GO BACK TO THOSE NOTES YOU TOOK IN THE  00027300
                                 274 *        SUBROUTINE USAGE SECTION, OR BUG YOUR INSTRUCTOR  00027400
                                 275 *        AND HAVE HIM EXPLAIN THE CONCEPT TO YOU.          00027500
                                 276 *                                                          00027600
                                 277 *        GO AHEAD, I'LL WAIT HERE FOR YOU...               00027700
                                 278 *------------------------------------------------------------------ 00027800
```

```
LOC   OBJECT CODE    ADDR1 ADDR2  STMT   SOURCE STATEMENT                                    F08APR70   9/17/70

                                  280 *-------------------------------------------------------------------- 00028000
                                  281 *                                                                     00028100
                                  282 *        IN ORDER TO MAKE OUR PROGRAM 'RE-ENTRANT', WE WOULD HAVE     00028200
                                  283 *        TO GET BY WITH SOME OTHER MEANS OF MODIFYING THE PROGRAM     00028300
                                  284 *        SWITCH, WHICH, IN THIS CASE, CANNOT BE A STORAGE LOCATION.   00028400
                                  285 *                                                                     00028500
                                  286 *        SEEM LIKE AN IMPOSSIBLE TASK ? FORTUNATELY, IT IS NOT.       00028600
                                  287 *        DEEP DOWN IN OUR BAG OF TRICKS WE FIND THE VERY VERSATILE    00028700
                                  288 *        EXECUTE INSTRUCTION, WHICH, AS YOU RECALL, GIVES THE         00028800
                                  289 *        COMPUTER THE IMPRESSION THAT WE HAVE MODIFIED AN INSTRUCTION 00028900
                                  290 *        ALTHOUGH WE KNOW THAT THE INSTRUCTION NEVER CHANGED.         00029000
                                  291 *        CHANGE, LIKE BEAUTY, IS IN THE EYE OF THE BEHOLDER.          00029100
                                  292 *        BEHOLD THEN, THE FOLLOWING EXAMPLE, WHICH IS 'SWITCH' (FROM  00029200
                                  293 *        QUESTION 9.1) ALL OVER AGAIN, BUT IT IS RE-ENTRANT THIS TIME. 00029300
                                  294 *                                                                     00029400
                                  295 *-------------------------------------------------------------------- 00029500
000088                            296 ADDRESS  EQU   *                                                      00029600
000088 1BEE                       297          SR    14,14                                                  00029700
00008A 18FE                       298 PICKUP15 LR    15,14              1                                   00029800
00008C 44F0 C0A2          000A8   299          EX    15,SWITCH3         2                                   00029900
000090 56E0 C09A          000A0   300          O     14,F240            3                                   00030000
000094 47F0 C084          0008A   301          B     PICKUP15           4                                   00030100
000098 54E0 C09E          000A4   302 DONTDOME N     14,F15             5                                   00030200
00009C 47F0 C0A6          000AC   303          B     SWITCH3+4          6                                   00030300
0000A0 000000F0                   304 F240     DC    F'240'                                                 00030400
0000A4 0000000F                   305 F15      DC    F'15'                                                  00030500
0000A8 4700 C092          00098   306 SWITCH3  BC    0,DONTDOME                                             00030600
                                  307 *                                                                     00030700
                                  308 *        THIS SAMPLE IS NOT INTENDED TO BE A PARTICULARLY GOOD        00030800
                                  309 *        CODING EXAMPLE, BUT IT SERVES TO ILLUSTRATE A POINT.         00030900
                                  310 *        ------------------------------------------------------       00031000


                                  312 ************************* QUESTION 9.5 ******************************** 00031200
                                  313 *        TO INSURE THAT YOU SEE THE SIMILARITY, DETERMINE THE ORDER   00031300
                                  314 *        IN WHICH THE INSTRUCTIONS IN THE EXAMPLE ABOVE WILL BE       00031400
                                  315 *        EXECUTED AND WRITE THEM BELOW BEFORE GOING ON TO THE NEXT    00031500
                                  316 *        PAGE. ASSUME THAT THE SR 14,14 IS EXECUTED FIRST, BUT DON'T  00031600
                                  317 *        WORRY ABOUT IT'S NOT HAVING A NUMBER.                        00031700
                                  318 ********************************************************************** 00031800
                                  319 *                                                                     00031900
                                  320 *                                                                     00032000
                                  321 *                                                                     00032100
                                  322 ********************************************************************** 00032200
```

```
LOC  OBJECT CODE    ADDR1 ADDR2  STMT   SOURCE STATEMENT                                          F08APR70   9/17/70

                                 324 *.......................................................... 00032400
                                 325 *        ANSWER 9.5                                          00032500
                                 326 *                                                            00032600
                                 327 *        THE INSTRUCTIONS WILL EXECUTE IN THE ORDER: 1,2,3,4,1,2,5,6   00032700
                                 328 *                                                            00032800
                                 329 *        REALIZE, OF COURSE, THAT WITH EACH EXECUTION OF THE EXECUTE   00032900
                                 330 *        INSTRUCTION, THAT THE INSTRUCTION LABELED 'SWITCH3' WAS ALSO  00033000
                                 331 *        EXECUTED. BECAUSE THE EFFECTIVE MASK WAS FIRST EQUAL TO 0 AND 00033100
                                 332 *        THEN CHANGED TO 15, THE BRANCH FIRST FAILED AND THEN WAS      00033200
                                 333 *        TAKEN THE SECOND TIME IT WAS EXECUTED.                        00033300
                                 334 *                                                            00033400
                                 335 *.......................................................... 00033500


                                 337 ************************ QUESTION 9.6 ********************************** 00033700
                                 338 *                                                            00033800
                                 339 *        IN THE FOLLOWING CODE, WHICH BYTE,('MASK1','MASK2' OR 'MASK3') 00033900
                                 340 *        SHOULD I INSERT INTO REGISTER 15 IN ORDER TO BRANCH TO        00034000
                                 341 *        LOCATION 'ALOWER' ?                                           00034100
                                 342 *                                                            00034200
                                 343 ******************************************************************** 00034300


29
0000AC 4120 000A          0000A  345          LA    2,10                                            00034500
0000B0 4130 0014          00014  346          LA    3,20              &&&&&&&&&&&&&&&&&&&&&&&&&&&&  00034600
                                 347 *        IC    15,_____  <-------& WRITE IN THE FIELD NAME  &   00034700
0000B4 1923                      348          CR    2,3               & (MASK1, MASK2 OR MASK3). &  00034800
0000B6 44F0 C0BC          000C2  349          EX    15,BRANCH         &&&&&&&&&&&&&&&&&&&&&&&&&&&&  00034900
0000BA 47F0 C0C2          000C8  350          B     AHIGHER                                         00035000
0000BE 80                        351 MASK1    DC    X'80'                                           00035100
0000BF 40                        352 MASK2    DC    X'40'                                           00035200
0000C0 20                        353 MASK3    DC    X'20'                                           00035300
0000C1 00
0000C2 4700 C0C0          000C6  354 BRANCH   BC    0,ALOWER                                        00035400
0000C6                           355 ALOWER   EQU   *                                               00035500
0000C6 1A32                      356          AR    3,2                 JUST A FILL INSTRUCTION TO MAKE  00035600
                                 357 *                                  'ALOWER' AND 'AHIGHER' DIFFERENT 00035700
                                 358 *                                  LOCATIONS.                      00035800
0000C8                           359 AHIGHER  EQU   *                                               00035900
```

```
LOC  OBJECT CODE    ADDR1 ADDR2  STMT   SOURCE STATEMENT                                    F08APR70   9/17/70

                                 361 *.......................................................... 00036100
                                 362 *        ANSWER 9.6                                        00036200
                                 363 *                                                          00036300
                                 364 *        IC     15,MASK2                                   00036400
                                 365 *                                                          00036500
                                 366 *        THIS SETS UP THE BRANCH TO APPEAR AS BC  4,ALOWER 00036600
                                 367 *        AND, SINCE 10 IS LOWER THAN 20, NATURE TAKES IT'S PROPER 00036700
                                 368 *        COURSE.                                           00036800
                                 369 *                                                          00036900
                                 370 ******** WHEN YOU REACH THIS POINT, DISPLAY THE BLUE SIDE OF YOUR 00037000
                                 371 *        "ANSWER CUE".                                     00037100
                                 372 *.......................................................... 00037200


                                 374 *---------------------------------------------------------- 00037400
                                 375 *                                                          00037500
                                 376 *        GOOD ENOUGH, THAT CONCLUDES THE PORTION ON THE USE OF 00037600
                                 377 *        PROGRAM SWITCHES. THE BALANCE OF THIS PROJECT WILL BE 00037700
                                 378 *        DEVOTED TO ILLUSTRATIONS OF OTHER WAYS IN WHICH BRANCH 00037800
                                 379 *        INSTRUCTIONS ARE COMMONLY USED.                   00037900
                                 380 *                                                          00038000
                                 381 *        BACK IN THE PROJECT ON ''SUBROUTINE USAGE'', WE USED A 00038100
                                 382 *        SUBROUTINE THAT RETURNED A CODE IN REGISTER 15 TO INDICATE 00038200
                                 383 *        JUST HOW SUCCESSFUL IT WAS IN FULFILLING THE JOB THAT WE HAD 00038300
                                 384 *        CALLED ON IT TO DO.   REMEMBER ?????              00038400
                                 385 *                                                          00038500
                                 386 *        IF YOU FORGOT, NOW WOULD BE A GOOD TIME TO REFRESH YOUR 00038600
                                 387 *        MEMORY BY GOING BACK AND TAKING A LOOK AT THE PROLOGUE 00038700
                                 388 *        FOR THE EXPONENTIATION SUBROUTINE.                00038800
                                 389 *                                                          00038900
                                 390 *---------------------------------------------------------- 00039000
0000C8 47F0 C19E         001A4   391          B     LOCATION     BRANCH AROUND THE BXH CODE... 00039100
```

```
LOC  OBJECT CODE    ADDR1 ADDR2  STMT   SOURCE STATEMENT                                    F08APR70   9/17/70

                                 393 *-------------------------------------------------------------------- 00039300
                                 394 *        GOOD, NOW THAT YOU REMEMBER THAT, REMEMBER ALSO THAT WE      00039400
                                 395 *        TESTED THE COMPLETION CODE USING SOMETHING LIKE THIS:        00039500
                                 396 *                                                                     00039600
0000CC 12FF                      397          LTR   15,15                                                  00039700
0000CE 4770 C0DC        000E2    398          BNZ   PHOOEY                                                 00039800
                                 399 *                                                                     00039900
                                 400 *        THE PROBLEM WITH THIS METHOD OF TESTING IS THAT IT HAS NO    00040000
                                 401 *        WAY OF DISTINGUISHING THE DEGREE OF FAILURE THAT OCCURRED    00040100
                                 402 *        WHEN WE USED THE SUBROUTINE.                                 00040200
                                 403 *                                                                     00040300
                                 404 *        O.K., YOU MIGHT SAY, WE COULD USE A COMPARISON OPERATION     00040400
                                 405 *        AND TEST THE VALUE OF THE RETURN CODE. CONSIDER:             00040500
0000D2 59F0 C21A        00220    406          C     15,=F'0'                                               00040600
0000D6 4780 C120        00126    407          BE    GOODASAU                                               00040700
0000DA 59F0 C21E        00224    408          C     15,=F'4'                                               00040800
0000DE 4780 C0E8        000EE    409          BE    HALFGOOD                                               00040900
0000E2                           410 PHOOEY   EQU   *                                                      00041000
                                 411 *                                                                     00041100
                                 412 *        OR, MORE IDEALLY,                                            00041200
                                 413 *                                                                     00041300
0000E2 59F0 C21E        00224    414          C     15,=F'4'                                               00041400
0000E6 4720 C0DC        000E2    415          BH    PHOOEY                                                 00041500
0000EA 4740 C120        00126    416          BL    GOODASAU                                               00041600
0000EE                           417 HALFGOOD EQU   *                                                      00041700
                                 418 *                                                                     00041800
                                 419 *        ALL THINGS BEING EQUAL, THE AVERAGE PROGRAMMER MIGHT BE MORE 00041900
                                 420 *        INCLINED TO USE SOMETHING CALLED A ''BRANCH TABLE'', WHICH,  00042000
                                 421 *        AS YOU WILL SEE, IS  JUST A BUNCH OF BRANCH INSTRUCTIONS     00042100
                                 422 *        ARRANGED SYSTEMATICALLY.                                     00042200
                                 423 *                                                                     00042300
                                 424 *        HERE'S ONE THAT DOES THE SAME THING AS THE PRECEEDING        00042400
                                 425 *        EXAMPLES.                                                    00042500
                                 426 *                                                                     00042600
                                 427 *                                                                     00042700
0000EE 47FF C0EC        000F2    428          B     BRTABLE(15)                                            00042800
0000F2 47F0 C120        00126    429 BRTABLE  B     GOODASAU            RETURN CODE = 0                    00042900
0000F6 47F0 C0E8        000EE    430          B     HALFGOOD            RETURN CODE = 4                    00043000
0000FA                           431 BADBAD   EQU   *                   RETURN CODE = 8                    00043100
                                 432 *                                                                     00043200
                                 433 *        BECAUSE THE USE OF THE BRANCH TABLE IS SO COMMON, IT         00043300
                                 434 *        HAS ALMOST BECOME A CONVENTION FOR SUBROUTINES TO RETURN     00043400
                                 435 *        CODES WHICH ARE MULTIPLES OF 4 (THE LENGTH OF THE BRANCH     00043500
                                 436 *        INSTRUCTION).                                                00043600
                                 437 *                                                                     00043700
                                 438 *        NOTICE THAT ALTHOUGH THE CODE FOR THE SAMPLE CALLED          00043800
                                 439 *        'BRTABLE' USES AS MANY BYTES OF CORE AS THE SAMPLE BEFORE IT, 00043900
                                 440 *        THE AMOUNT OF CODE TO TEST FOR MORE RETURN CODES GROWS       00044000
                                 441 *        ONLY SLIGHTLY FOR THE BRANCH TABLE (4 BYTES TIMES THE NUMBER 00044100
                                 442 *        OF CODES TO BE RETURNED).                                    00044200
                                 443 *                                                                     00044300
                                 444 *-------------------------------------------------------------------- 00044400
```

```
LOC  OBJECT CODE    ADDR1 ADDR2  STMT   SOURCE STATEMENT                                          F08APR70   9/17/70

                                 446 ************************ QUESTION 9.7 ********************************** 00044600
                                 447 *                                                                      00044700
                                 448 *        OK, THE CONCEPT OF THE BRANCH TABLE IS RATHER SIMPLE, SO,     00044800
                                 449 *        BY NOW, YOU MUST BE READY FOR A QUESTION ABOUT ONE.           00044900
                                 450 *                                                                      00045000
                                 451 *        IN THE FOLLOWING, WHAT MUST THE RETURN CODE BE TO CAUSE US    00045100
                                 452 *        TO BRANCH TO 'BLEAH' ?                                        00045200
                                 453 ********************************************************************** 00045300
                                 454 *                                                                      00045400
                                 455 *                                                                      00045500
                                 456 *                                                                      00045600
                                 457 ********************************************************************** 00045700


0000FA 47FF C0F4          000FA   459 BTABLE   B     BTABLE(15)                                            00045900
0000FE 47F0 C120          00126   460         B     COOLCOOL                                              00046000
000102 47F0 C120          00126   461         B     CLOSE                                                 00046100
000106 47F0 C120          00126   462         B     ENUF4JAZ                                              00046200
00010A 47F0 C120          00126   463         B     MEDIOCRE                                              00046300
00010E 47F0 C120          00126   464         B     GETSCOLD                                              00046400
000112 47F0 C120          00126   465         B     HALFPAST                                              00046500
000116 47F0 C120          00126   466         B     BLEAH                                                 00046600
00011A 47F0 C120          00126   467         B     YECHHH                                                00046700
00011E 47F0 C120          00126   468         B     ROTTEN                                                00046800
000122 47F0 C120          00126   469         B     DISASTER                                              00046900
```

```
LOC  OBJECT CODE    ADDR1 ADDR2  STMT   SOURCE STATEMENT                                    F08APR70   9/17/70

                                 471 *.......................................................... 00047100
                                 472 *        ANSWER 9.7                                        00047200
                                 473 *                                                          00047300
                                 474 *        THE RETURN CODE MUST BE EQUAL TO 28.              00047400
                                 475 *                                                          00047500
                                 476 *        IF YOU GET ANYTHING ELSE, GO BACK AND LOOK AT THE TABLE  00047600
                                 477 *        AGAIN. OH YES, WHEN YOU LOOK BACK AT IT, ALSO ANSWER  00047700
                                 478 *        QUESTION 9.8.                                     00047800
                                 479 *                                                          00047900
                                 480 *.......................................................... 00048000


                                 482 ************************* QUESTION 9.8 ******************************** 00048200
                                 483 *                                                          00048300
                                 484 *        LOOK AT THE FIRST INSTRUCTION. IS THERE ANYTHING ABOUT IT  00048400
                                 485 *        THAT WOULD MAKE IT BEHAVE INCORRECTLY ?           00048500
                                 486 *                                                          00048600
                                 487 ********************************************************** 00048700
                                 488 *                                                          00048800
                                 489 *                                                          00048900
                                 490 ********************************************************** 00049000
```

```
  LOC  OBJECT CODE    ADDR1 ADDR2  STMT   SOURCE STATEMENT                                          F08APR70   9/17/70

                                    492 *.......................................................................  00049200
                                    493 *         ANSWER 9.8                                                      00049300
                                    494 *                                                                         00049400
                                    495 *         THAT DEPENDS ON YOUR POINT OF VIEW. WHAT DOES HAPPEN IS THAT    00049500
                                    496 *         THE FIRST INSTRUCTION WILL LOOP FOREVER IF A CODE OF 0 IS       00049600
                                    497 *         RETURNED. AND REMEMBER, ZERO WAS THE RETURN CODE FOR            00049700
                                    498 *         SUCCESSFUL COMPLETION. SO WE WOULD EXPECT A RETURN CODE OF      00049800
                                    499 *         ZERO NORMALLY, AND TO LOOP IF EVERYTHING GOES WELL IS NOT       00049900
                                    500 *         PARTICULARLY ADVANTAGEOUS, UNLESS OF COURSE, YOU CAN'T          00050000
                                    501 *         STAND PROSPERITY.                                               00050100
                                    502 *                                                                         00050200
                                    503 ********* WHEN YOU GET HERE, DISPLAY THE RED SIDE OF THE "ANSWER CUE".    00050300
                                    504 *                                                                         00050400
                                    505 *.......................................................................  00050500


                                    507 *&&&&&&&&&&&&&&&&&&&&&&&&&&&&&&&&&&&&&&&&&&&&&&&&&&&&&&&&&&&&&&&&&&&&&&&  00050700
                                    508 *         SKIP TO THE NEXT PAGE, THE EQUATES THAT FOLLOW ARE JUST TO      00050800
                                    509 *         KEEP THE NAMES I'VE BEEN USING FROM COMING OUT UNRESOLVED.      00050900
                                    510 *&&&&&&&&&&&&&&&&&&&&&&&&&&&&&&&&&&&&&&&&&&&&&&&&&&&&&&&&&&&&&&&&&&&&&&&  00051000


000126                              512 GOODASAU EQU   *            YOU                                       00051200
000126                              513 COOLCOOL EQU   *            MAY                                       00051300
000126                              514 CLOSE    EQU   *            IGNORE                                    00051400
000126                              515 ENUF4JAZ EQU   *            THESE,                                    00051500
000126                              516 MEDIOCRE EQU   *            THEY                                      00051600
000126                              517 GETSCOLD EQU   *            ARE                                       00051700
000126                              518 HALFPAST EQU   *            ONLY HERE                                 00051800
000126                              519 BLEAH    EQU   *            TO                                        00051900
000126                              520 YECHHH   EQU   *            MAKE THE                                  00052000
000126                              521 ROTTEN   EQU   *            ASSEMBLER                                 00052100
000126                              522 DISASTER EQU   *            HAPPY.                                    00052200
```

```
LOC  OBJECT CODE    ADDR1 ADDR2  STMT   SOURCE STATEMENT                                    F08APR70   9/17/70

                                 524 *-------------------------------------------------------------------- 00052400
                                 525 *        NOW WE MOVE ON TO ONE OF THE MORE EXOTIC INSTRUCTIONS CALLED  00052500
                                 526 *        'BRANCH ON INDEX HIGH' OR BXH, AND ITS RELATIVE 'BRANCH ON    00052600
                                 527 *        INDEX LOW OR EQUAL' OR BXLE. THE WAY THAT I'M GOING TO USE    00052700
                                 528 *        THESE TWO INSTRUCTIONS HERE IS PROBABLY NOT THE WAY THEY       00052800
                                 529 *        WERE INTENDED TO BE USED, BUT IT TURNS OUT TO BE QUITE         00052900
                                 530 *        HANDY AND RAPIDLY GAINING IN POPULARITY.                       00053000
                                 531 *                                                                       00053100
                                 532 *        LET US FIRST EXAMINE THE OPERATION OF THE INSTRUCTION IN IT'S  00053200
                                 533 *        LEAST INVOLVED FORM.                                           00053300
                                 534 *        THE INSTRUCTION FORMAT IS.....                                 00053400
                                 535 *                                                                       00053500
                                 536 *        BXH   REGA,REGB,LOCATION                                       00053600
                                 537 *                                                                       00053700
                                 538 *        IT IS INTUITIVELY OBVIOUS TO THE MOST CASUAL OBSERVER THAT     00053800
                                 539 *        THERE ARE TWO REGISTERS USED IN THE BXH INSTRUCTION, RIGHT ??  00053900
                                 540 *                                                                       00054000
                                 541 *        WRONG ... THAT WILL TEACH YOU TO ONLY CASUALLY OBSERVE.        00054100
                                 542 *        THE SECOND OPERAND 'REGB' USUALLY ADDRESSES AN EVEN NUMBERED   00054200
                                 543 *        REGISTER, AND WHEN IT DOES, THE NEXT HIGHER ODD REGISTER       00054300
                                 544 *        ALSO GETS INCLUDED IN THE ACTION.                              00054400
                                 545 *                                                                       00054500
                                 546 *        LETS SEE, THAT GIVES US THREE REGISTERS NAMED REGA, REGB       00054600
                                 547 *        AND REGB+1. FUNCTIONALLY (BASED UPON WHAT THEY DO), WE         00054700
                                 548 *        MIGHT CALL THESE REGISTERS BY THE FOLLOWING NAMES.             00054800
                                 549 *        REGA IS CALLED THE 'INDEX'.                                    00054900
                                 550 *        REGB WE WILL CALL THE 'INCREMENT', BECAUSE IT IT USED TO       00055000
                                 551 *             INCREASE THE VALUE IN REGA.                               00055100
                                 552 *        REGB+1 IS THE 'COMPARAND' BECAUSE IT WILL BE COMPARED TO       00055200
                                 553 *             THE 'INDEX'.                                              00055300
                                 554 *                                                                       00055400
                                 555 *        SO, THE BXH WORKS LIKE THIS:                                   00055500
                                 556 *        1) THE 'INCREMENT' IS ADDED TO THE 'INDEX'.                    00055600
                                 557 *           'REGA' = 'REGA' + 'REGB'                                    00055700
                                 558 *                                                                       00055800
                                 559 *        2) THE NEW 'INDEX' VALUE IS COMPARED TO THE 'COMPARAND'.       00055900
                                 560 *           'REGA' ? 'REGB+1'              (? MEANS COMPARED AGAINST)   00056000
                                 561 *                                                                       00056100
                                 562 *        3) IF THE NEW 'INDEX' IS HIGHER, WE TAKE THE BRANCH.           00056200
                                 563 *           IF 'REGA' > 'REGB+1', BRANCH.                               00056300
                                 564 *                                                                       00056400
                                 565 *        READ THAT OVER AGAIN TO BE CERTAIN THAT IT IS CLEAR,           00056500
                                 566 *        THEN ANSWER THE FOLLOWING.                                     00056600
                                 567 *-------------------------------------------------------------------- 00056700


                                 569 ************************ QUESTION 9.9 ********************************** 00056900
                                 570 *        REGISTER 3 CONTAINS 250.                                       00057000
                                 571 *        REGISTER 4 CONTAINS 25.                                        00057100
                                 572 *        REGISTER 5 CONTAINS 275.                                       00057200
                                 573 *        IF I EXECUTE THE FOLLOWING, WILL WE BRANCH TO 'INDEX3HI' ?     00057300
                                 574 ********************************************************************** 00057400
                                 575 *                                                                       00057500
                                 576 ********************************************************************** 00057600
000126 8634 C124          0012A  577          BXH   3,4,INDEX3HI                                            00057700
```

```
 LOC  OBJECT CODE    ADDR1 ADDR2  STMT   SOURCE STATEMENT                                        F08APR70   9/17/70

                                  579 *.......................................................... 00057900
                                  580 *        ANSWER 9.9                                        00058000
                                  581 *                                                          00058100
                                  582 *        NO, BECAUSE 250 + 25   IS NOT HIGHER THAN 275.    00058200
                                  583 *                    REG3 + REG4 IS NOT HIGHER THAN REG 5.  00058300
                                  584 *.......................................................... 00058400
00012A                            585 INDEX3HI EQU   *                                           00058500


                                  587 ************************ QUESTION 9.10 ******************************** 00058700
                                  588 *                                                          00058800
                                  589 *        ALL RIGHT, JUST FOR DRILL, WE'LL TRY ANOTHER ONE. GIVEN 00058900
                                  590 *        THE FOLLOWING REGISTER CONTENTS,                  00059000
                                  591 *        REGISTER 3 CONTAINS 12345.                        00059100
                                  592 *        REGISTER 4 CONTAINS -1224.                        00059200
                                  593 *        REGISTER 5 CONTAINS 11111.                        00059300
                                  594 *        IF I EXECUTE THE FOLLOWING, WILL I BRANCH TO 'INDEX3AI' ? 00059400
                                  595 *                                                          00059500
                                  596 ********************************************************** 00059600
                                  597 *                                                          00059700
                                  598 ********************************************************** 00059800
00012A 8634 C128          0012E   599        BXH   3,4,INDEX3AI                                  00059900
```

```
 LOC  OBJECT CODE    ADDR1 ADDR2  STMT   SOURCE STATEMENT                                          F08APR70   9/17/70

                                  601 *.......................................................................  00060100
                                  602 *        ANSWER 9.10                                                    00060200
                                  603 *                                                                       00060300
                                  604 *        YES, BECAUSE 12345 + (-1224) IS HIGHER THAN 11111.(IT = 11121) 00060400
                                  605 *                     REG.3 +  REG.4  IS HIGHER THAN REG.5.             00060500
                                  606 *.......................................................................  00060600
00012E                            607 INDEX3AI EQU   *                                                       00060700


                                  609 *-----------------------------------------------------------------------  00060900
                                  610 *                                                                       00061000
                                  611 *        FIRST VARIATION ON A THEME.                                    00061100
                                  612 *                                                                       00061200
                                  613 *        BXH   REGA,REGB,LOCATION                                       00061300
                                  614 *                                                                       00061400
                                  615 *        SUPPOSE WE WERE TO USE AN ODD-NUMBERED REGISTER FOR REGB.      00061500
                                  616 *        IN SO DOING, REGB+1 IS NO LONGER ODD AND THE BXH OPERATION     00061600
                                  617 *        CHANGES SLIGHTLY.                                              00061700
                                  618 *                                                                       00061800
                                  619 *        IF THE SECOND OPERAND IS AN ODD-NUMBERED REGISTER, IT BECOMES  00061900
                                  620 *        BOTH 'INCREMENT' AND 'COMPARAND' AND THE INSTRUCTION GOES      00062000
                                  621 *        ON AS BEFORE.                                                  00062100
                                  622 *                                                                       00062200
                                  623 *        1.'REGA' = 'REGA' + 'REGB'                                     00062300
                                  624 *        2.'REGA' ? 'REGB'       (? MEANS IS COMPARED AGAINST)          00062400
                                  625 *        3.IF 'REGA' > 'REGB', BRANCH.                                  00062500
                                  626 *                                                                       00062600
                                  627 *-----------------------------------------------------------------------  00062700


                                  629 ************************ QUESTION 9.11 ********************************  00062900
                                  630 * GIVEN: REGISTER 4 CONTAINS 250.                                       00063000
                                  631 *        REGISTER 5 CONTAINS 25.                                        00063100
                                  632 *                                                                       00063200
                                  633 *        IF I EXECUTE THE FOLLOWING, WILL I BRANCH TO 'INDEX4HI' ?      00063300
                                  634 ***********************************************************************  00063400
                                  635 *                                                                       00063500
                                  636 *                                                                       00063600
                                  637 ***********************************************************************  00063700
00012E 8645 C12C            00132 638          BXH   4,5,INDEX4HI                                           00063800
```

```
 LOC  OBJECT CODE    ADDR1 ADDR2  STMT   SOURCE STATEMENT                                    F08APR70   9/17/70

                                  640 *.......................................................... 00064000
                                  641 *        ANSWER 9.11                                       00064100
                                  642 *                                                          00064200
                                  643 *        YES, BECAUSE REG4 + REG5 IS HIGHER THAN REG5.     00064300
                                  644 *                     250  +  25  IS HIGHER THAN 25.       00064400
                                  645 *.......................................................... 00064500
000132                            646 INDEX4HI EQU   *                                           00064600


                                  648 *------------------------------------------------------------ 00064800
                                  649 *        SECOND AND FINAL VARIATION ON A THEME.            00064900
                                  650 *                                                          00065000
                                  651 *        NOW WE GET TO THE REAL FUN......                  00065100
                                  652 *                                                          00065200
                                  653 *        IF WE WERE TO MAKE REGA EQUAL REGB, AND MAKE (IT/THEM) ODD 00065300
                                  654 *        AT THE SAME TIME, THE ONE REGISTER WOULD BE 'INDEX',  00065400
                                  655 *        'INCREMENT' AND 'COMPARAND' AND EVERYTHING WOULD PROCEED 00065500
                                  656 *        JUST AS BEFORE.                                   00065600
                                  657 *        1) THE 'INDEX' IS ADDED TO THE 'INCREMENT'.       00065700
                                  658 *        2) THE NEW INDEX VALUE IS COMPARED TO THE 'COMPARAND'. 00065800
                                  659 *        3) IF THE 'INDEX' IS HIGHER THAN THE 'COMPARAND', WE BRANCH. 00065900
                                  660 *                                                          00066000
                                  661 *        HA HA  YOU SCOFF, IF YOU ADD SOMETHING TO ITSELF IT MUST 00066100
                                  662 *        BE HIGHER THAN IT WAS AND YOU WOULD ALWAYS BRANCH, RIGHT ? 00066200
                                  663 *                                                          00066300
                                  664 *        WRONG ... DO YOUR SCOFFING ON YOUR OWN TIME, LETS BE 00066400
                                  665 *        SERIOUS AND REALLY DIG INTO THIS INSTRUCTION.     00066500
                                  666 *                                                          00066600
                                  667 *        THE ADDITION THAT WE DO IS ALGEBRAIC, BUT NO OVERFLOW 00066700
                                  668 *        INDICATION IS GIVEN. THE KEY TO WHAT IS ABOUT TO HAPPEN 00066800
                                  669 *        IS THAT THE SIGN BIT MAY BE CHANGED DURING THE OPERATION 00066900
                                  670 *        AND SINCE THE ALGEBRAIC COMPARISON IS MADE WITHOUT TESTING 00067000
                                  671 *        FOR OVERFLOW, A PREVIOUSLY POSITIVE NUMBER MAY HAVE JUST 00067100
                                  672 *        CHANGED TO A NEGATIVE ONE, IF OVERFLOW OCCURS.    00067200
                                  673 *                                                          00067300
                                  674 *        SOME CHINESE PHILOSOPHER CLAIMED THAT A PICTURE IS WORTH 00067400
                                  675 *        A THOUSAND WORDS, LET ME SEE IF THAT IS TRUE. LOOK AT THE 00067500
                                  676 *        FOLLOWING EXAMPLE OF THE EXECUTION OF THIS INSTRUCTION. 00067600
                                  677 *                                                          00067700
000132 8633 C19E          001A4   678          BXH   3,3,LOCATION                                00067800
                                  679 *------------------------------------------------------------ 00067900
```

```
 LOC  OBJECT CODE    ADDR1 ADDR2  STMT   SOURCE STATEMENT                                          F08APR70   9/17/70
                                  681 ***********************************************************************00068100
                                  682 *                                                                      00068200
                                  683 *        ASSUME THAT REGISTER 3 CONTAINS THE FOLLOWING BINARY VALUE.   00068300
                                  684 *                                                                      00068400
                                  685 *        BIT NUMBER   012345  10        20          31                 00068500
                                  686 *        REGISTER 3 = 01100111001111010010011101101001                 00068600
                                  687 *                                                                      00068700
                                  688 *        WHEN WE EXECUTE:                                              00068800
000136 8633 C19E            001A4 689          BXH   3,3,LOCATION                                            00068900
                                  690 *                                                                      00069000
                                  691 *        REGISTER THREE GETS ADDED TO ITSELF:                          00069100
                                  692 *                                                                      00069200
                                  693 *        REGISTER 3 = 01100111001111010010011101101001                 00069300
                                  694 *  PLUS  REGISTER 3 = 01100111001111010010011101101001                 00069400
                                  695 *                     ________________________________                 00069500
                                  696 * EQUALS NEW REG. 3 = 11001110011110100100111011010010                 00069600
                                  697 *        WHICH IS MERELY THE OLD VALUE SHIFTED LEFT ONE BIT POSITION.  00069700
                                  698 *        BUT WE ARE NOT FINISHED EXECUTING THE INSTRUCTION YET, SO:    00069800
                                  699 *                                                                      00069900
                                  700 *        OLD REG. 3 = 01100111001111010010011101101001                 00070000
                                  701 *        COMPARED TO                                                   00070100
                                  702 *        NEW REG. 3 = 11001110011110100100111011010010                 00070200
                                  703 *        YIELDS:                                                       00070300
                                  704 *        THE NEW VALUE OF REGISTER 3 IS LOWER THAN THE OLD VALUE       00070400
                                  705 *        OF REGISTER THREE, SO WE DO NOT BRANCH.                       00070500
                                  706 *                                                                      00070600
                                  707 *        "WHAT THE HECK ??", YOU INQUIRE POLITELY.                     00070700
                                  708 *        "ELEMENTARY, MY DEAR WHATSIS ", I REPLY, "REGISTER 3 IS LOWER 00070800
                                  709 *        NOW BECAUSE IT HAS GONE NEGATIVE WHEN THE '1' IN BIT          00070900
                                  710 *        POSITION 1 GOT SHIFTED INTO POSITION 0 (THE SIGN BIT IN THE   00071000
                                  711 *        REGISTER)".                                                   00071100
                                  712 *                                                                      00071200
                                  713 *----------------------------------------------------------------------00071300


                                  715 ********************** QUESTION 9.12 ********************************00071500
                                  716 *                                                                      00071600
                                  717 *        IF WE WERE TO EXECUTE THE                                     00071700
00013A 8633 C19E            001A4 718          BXH   3,3,LOCATION                                            00071800
                                  719 *        INSTRUCTION AGAIN, USING THE LAST VALUE GIVEN IN THE EXAMPLE  00071900
                                  720 *        ABOVE, WOULD WE BRANCH TO 'LOCATION' THIS TIME ?              00072000
                                  721 *                                                                      00072100
                                  722 ***********************************************************************00072200
                                  723 *                                                                      00072300
                                  724 *                                                                      00072400
                                  725 ***********************************************************************00072500
```

```
LOC  OBJECT CODE    ADDR1 ADDR2  STMT   SOURCE STATEMENT                                    F08APR70   9/17/70

                                 727 *.......................................................... 00072700
                                 728 *        ANSWER 9.12                                       00072800
                                 729 *                                                          00072900
                                 730 *        NO, WE DO NOT BRANCH THIS TIME EITHER, BECAUSE A BIT WAS  00073000
                                 731 *        SHIFTED INTO THE SIGN POSITION MAKING THE RESULT NEGATIVE 00073100
                                 732 *        AGAIN.                                            00073200
                                 733 *                                                          00073300
                                 734 *        CONSIDER THIS MORE CLOSELY, SINCE THE TWO VALUES OF REGISTER  00073400
                                 735 *        3 ARE NEGATIVE, THERE IS A CHANCE THAT THE NEW VALUE COULD 00073500
                                 736 *        BE HIGHER THAN THE OLD, AND MAYBE WE REALLY SHOULD BRANCH. 00073600
                                 737 *                                                          00073700
                                 738 *        ONE THING THAT YOU MUST REMEMBER, IS THAT OUR NEGATIVE NUMBER 00073800
                                 739 *        IN REGISTER 3 IS IN TWO'S COMPLEMENT FORM AND AS SUCH IS  00073900
                                 740 *        MORE 'NEGATIVE' THAN IT USED TO BE.               00074000
                                 741 *                                                          00074100
                                 742 *        VISUALLY:                                         00074200
                                 743 *                                                          00074300
                                 744 *        OLD REGISTER 3 = 11001110011110100100111011010010 00074400
                                 745 *        2'S COMPLEMENT = 00110001100001011011000100101110 (MINUS) 00074500
                                 746 *                                                          00074600
                                 747 *        NEW REGISTER 3 = 10011100111101001001110110100100 00074700
                                 748 *        2'S COMPLEMENT = 01100011000010110110001001C11100 (MINUS) 00074800
                                 749 *                                                          00074900
                                 750 *        BECAUSE THE NEW VALUE IS FARTHER AWAY FROM ZERO THAN THE OLD 00075000
                                 751 *        ( IN THE NEGATIVE DIRECTION ), IT IS ALGEBRAICALLY 00075100
                                 752 *        SMALLER, AND WE DON'T BRANCH.                     00075200
                                 753 *                                                          00075300
                                 754 ********************************************************** 00075400


                                 756 ******************** QUESTION 9.13 ************************** 00075600
                                 757 *                                                          00075700
                                 758 *        NOW'S YOUR BIG CHANCE...... LETS EXECUTE THE SAME 00075800
                                 759 *        INSTRUCTION ONE MORE TIME. AND SEE WHAT HAPPENS.  00075900
                                 760 *        ASSUME THAT REGISTER 3 CONTAINS THE SAME VALUE THAT WE 00076000
                                 761 *        LEFT OFF WITH IN THE LAST QUESTION.               00076100
                                 762 *        WILL WE BRANCH TO 'LOCATION' THIS TIME ?          00076200
                                 763 *                                                          00076300
                                 764 ********************************************************** 00076400
                                 765 *                                                          00076500
                                 766 *                                                          00076600
                                 767 ********************************************************** 00076700
00013E 8633 C19E          001A4  768          BXH   3,3,LOCATION                               00076800
```

```
LOC  OBJECT CODE    ADDR1 ADDR2  STMT   SOURCE STATEMENT                                    F08APR70   9/17/70

                                 770 *.......................................................... 00077000
                                 771 *        ANSWER 9.13                                       00077100
                                 772 *                                                          00077200
                                 773 *        YES, THIS TIME WE BRANCH, BECAUSE THE SIGN BIT WILL CONTAIN  00077300
                                 774 *        A ZERO WHEN THE SHIFTING IS COMPLETED, AND THE RESULT IS     00077400
                                 775 *        POSITIVE AND HIGHER THAN THE PREVIOUS NEGATIVE NUMBER IN     00077500
                                 776 *        REGISTER 3.                                                  00077600
                                 777 *        OLD REG. 3 = 10011100111101001001110110100100               00077700
                                 778 *        NEW REG. 3 = 00111001111010010011101101001000               00077800
                                 779 *                                                                    00077900
                                 780 *.......................................................... 00078000


                                 782 *---------------------------------------------------------- 00078200
                                 783 *                                                                    00078300
                                 784 *        IF WE WERE TO CARRY THIS OPERATION ONE STEP FARTHER, WE     00078400
                                 785 *        WOULD SEE THAT THE NEXT SHIFT WOULD PUT A ZERO IN THE       00078500
                                 786 *        SIGN AGAIN AND, BECAUSE THE NEW VALUE WOULD BE TWICE THE    00078600
                                 787 *        OLD, WE WOULD BRANCH.                                       00078700
                                 788 *                                                                    00078800
                                 789 *        FROM WHAT WE HAVE OBSERVED, THEN, WE CAN DERIVE A RULE.     00078900
                                 790 *                                                                    00079000
                                 791 *                 ************************                           00079100
                                 792 *                 * BXH AXIOM NUMBER 1 . *                           00079200
                                 793 *                 * --- ----- ------ - - *                           00079300
                                 794 *                 ************************                           00079400
                                 795 *                                                                    00079500
                                 796 *        WHENEVER WE EXECUTE A BXH INSTRUCTION OF THE FORM:          00079600
                                 797 *                                                                    00079700
                                 798 *        BXH   ODDREG,ODDREG,LOCATION                                00079800
                                 799 *                                                                    00079900
                                 800 *        THE BRANCH TO 'LOCATION' WILL BE MADE ANY TIME THAT         00080000
                                 801 *        A ZERO IS SHIFTED INTO THE SIGN POSITION, AND WE WILL       00080100
                                 802 *        NOT BRANCH ANY TIME THAT A ONE-BIT IS SHIFTED INTO THE      00080200
                                 803 *        SIGN POSITION OF THE REGISTER.                              00080300
                                 804 *                                                                    00080400
                                 805 *        SO BE IT.                                                   00080500
                                 806 *                                                                    00080600
                                 807 ******** NOW DISPLAY THE YELLOW SIDE OF THE "ANSWER CUE".           00080700
                                 808 *                                                                    00080800
                                 809 *---------------------------------------------------------- 00080900
```

```
                                    811 *++++++++++++++++++++++++++++++++++++++++++++++++++++++++++++++++++++++ 00081100
                                    812 *                                                                       00081200
                                    813 *        EARLIER, I SAID THAT THIS TECHNIQUE WAS GAINING IN POPULARITY, 00081300
                                    814 *        BUT I HAVEN'T REALLY SHOWN ANY REAL USE FOR THIS BXH           00081400
                                    815 *        INSTRUCTION, AT LEAST NOT IN THE WAY I'VE JUST DESCRIBED.      00081500
                                    816 *        WELL, IT'S USED TO CONTROL LOGIC FLOW IN SOME PROGRAMS, WHERE  00081600
                                    817 *        THE SAME CODE MAY BE USED TO DO MANY THINGS. LOOK AT THE       00081700
                                    818 *        FOLLOWING PROGRAM, WHICH WILL FIND THE AREA OF A CIRCLE,       00081800
                                    819 *        A SQUARE, A TRIANGLE, A TRAPEZOID, OR A RECTANGLE,             00081900
                                    820 *        DEPENDING UPON THE VALUE POINTED TO BY REGISTER 14.            00082000
                                    821 *        NOTICE THAT IT IS THE BXH INSTRUCTION THAT DOES ALL THE        00082100
                                    822 *        DECISION MAKING IN THE PROGRAM.                                00082200
                                    823 *                                                                       00082300
                                    824 *++++++++++++++++++++++++++++++++++++++++++++++++++++++++++++++++++++++ 00082400


                                    826 *********************************************************************** 00082600
                                    827 *        ON ENTRY TO THIS ROUTINE, THE USER MUST HAVE SET UP THE        00082700
                                    828 *        FOLLOWING FLOATING-POINT REGISTERS WITH THE FOLLOWING VALUES,  00082800
                                    829 *        DEPENDING UPON THE DESIRED FUNCTION. ALSO, GENERAL REGISTER    00082900
                                    830 *        14 WILL NEED TO POINT TO A HALF-WORD CONSTANT WHICH CONTAINS   00083000
                                    831 *        THE INDICATED VALUE. THIS CONSTANT VALUE WILL BE USED TO       00083100
                                    832 *        OBTAIN A BIT PATTERN FROM A TABLE OF CONSTANTS. THE BITS IN    00083200
                                    833 *        THIS BIT PATTERN WILL GUIDE THE FLOW THROUGH THE ROUTINE,      00083300
                                    834 *        USING THE BXH INSTRUCTION.                                     00083400
                                    835 *                                                                       00083500
                                    836 *        AREA OF: |F.P.REG 0  |F.P.REG 2 |F.P.REG 4| REG 14 ->DC H'N'   00083600
                                    837 *        ---------+-----------+----------+---------+-----------------¬  00083700
                                    838 *        CIRCLE   |DIAMETER   |   N/A    |  N/A    |    H'0'         |  00083800
                                    839 *        ---------+-----------+----------+---------+-----------------¬  00083900
                                    840 *        SQUARE   |SIDE       |   N/A    |  N/A    |    H'2'         |  00084000
                                    841 *        ---------+-----------+----------+---------+-----------------¬  00084100
                                    842 *        RECTANGLE|LENGTH     |WIDTH     |  N/A    |    H'4'         |  00084200
                                    843 *        ---------+-----------+----------+---------+-----------------¬  00084300
                                    844 *        TRIANGLE |HEIGHT     |BASE      |  N/A    |    H'6'         |  00084400
                                    845 *        ---------+-----------+----------+---------+-----------------¬  00084500
                                    846 *        TRAPEZOID|HEIGHT     |SHORT SIDE|LONG SIDE|    H'8'         |  00084600
                                    847 *        ---------+-----------+----------+---------+------------------  00084700
                                    848 *                                                                       00084800
                                    849 *        FORMULAE USED:                                                 00084900
                                    850 *          AREA CIRCLE = (DIAMETER/2)(DIAMETER/2) X 3.14159             00085000
                                    851 *          AREA SQUARE = SIDE X SIDE                                    00085100
                                    852 *          AREA RECTANGLE = LENGTH X WIDTH                              00085200
                                    853 *          AREA TRIANGLE  = (HEIGHT/2) X BASE                           00085300
                                    854 *          AREA TRAPEZOID = (LONG SIDE + SHORT SIDE) X HEIGHT/2         00085400
                                    855 *                                                                       00085500
                                    856 *********************************************************************** 00085600

000000                              858 R0       EQU   0        FLOATING POINT REGISTER 0                       00085800
000001                              859 R1       EQU   1        GENERAL PURPOSE REGISTER 1                      00085900
000002                              860 R2       EQU   2        FLOATING POINT REGISTER 2                       00086000
000004                              861 R4       EQU   4        FLOATING POINT REGISTER 4                       00086100
00000E                              862 R14      EQU   14       GENERAL PURPOSE REGISTER 14                     00086200
```

```
 LOC  OBJECT CODE    ADDR1 ADDR2  STMT   SOURCE STATEMENT                                        F08APR70   9/17/70

000142 481E 0000            00000   864 AREAS    LH    R1,0(R14)       PICK UP DISPLACEMENT INTO TABLE          00C86400
000146 4811 C16C            00172   865          LH    R1,MSKTABLE(R1) OBTAIN MASK                              00086500
00014A 8910 0010            00010   866          SLL   R1,16           SHIFT TO BITS 0-15 IN REGISTER 1         00C86600
                                    867 *                                                                        00086700
                                    868 * THE FOLLOWING BRANCH IS CONTROLLED BY BIT 'A' IN THE MASK.             00086800
                                    869 *                                                                        00086900
00014E 8611 C14E            00154   870          BXH   R1,R1,NOHALVE                                          00087000
000152 2400                         871        .  HDR   R0,R0           DIVIDE BY TWO                            00087100
                                    872 *                                                                        00087200
                                    873 * THE FOLLOWING BRANCH IS CONTROLLED BY BIT 'B'.                         00087300
                                    874 *                                                                        00087400
000154 8611 C154            0015A   875 NOHALVE  BXH   R1,R1,NOADD                                            00087500
000158 2A24                         876          ADR   R2,R4           ADD SIDE1 AND SIDE 2 (TRAPEZOID ONLY)    00087600
                                    877 *                                                                        00087700
                                    878 * THE FOLLOWING BRANCH IS CONTROLLED BY BIT 'C'.                         00087800
                                    879 *                                                                        00087900
00015A 8611 C15A            00160   880 NOADD    BXH   R1,R1,NOSQUARE                                         00088000
00015E 2C00                         881          MDR   R0,R0           SQUARE THE FACTOR                        00088100
                                    882 *                                                                        00088200
                                    883 * THE FOLLOWING BRANCH IS CONTROLLED BY BIT 'D'.                         00088300
                                    884 *                                                                        00088400
000160 8611 C160            00166   885 NOSQUARE BXH   R1,R1,NOMLTPLY                                         00088500
000164 2C02                         886          MDR   R0,R2           MULTIPLY TWO FACTORS                     00088600
                                    887 *                                                                        00088700
                                    888 * THE FOLLOWING BRANCH IS CONTROLLED BY BIT 'E'.                         00088800
                                    889 *                                                                        00088900
000166 8611 C168            0016E   890 NOMLTPLY BXH   R1,R1,ALLFOLKS                                          00089000
00016A 6C00 C17A            00180   891          MD    R0,PI           MULTIPLY BY PI                           00089100
00016E 47FE 0002            00002   892 ALLFOLKS B     2(R14)          RETURN TO CALLER, ANSWER IS IN F.P.REG 0. 00089200


000172                              894 MSKTABLE DS    0H                                                        00089400
                                    895 *                  +++++<------------THESE LETTERS CORRESPOND TO         00089500
                                    896 *                  |||||             THE BITS REFERRED TO IN QUOTES       00089600
                                    897 *                  VVVVV             ( BIT 'A' ), IN THE COMMENTS         00089700
                                    898 *                 -ABCDE--PADDING--  PRECEEDING THE BXH'S ABOVE.          00089800
000172 54FF                         899 CIRCLE   DC    BL2'0101010011111111'                                    00089900
000174 10FF                         900 SQUARE   DC    BL2'0001000011111111'                                    00090000
000176 08FF                         901 RECTNGLE DC    BL2'0000100011111111'                                    00090100
000178 0000                         902 TRIANGLE DC    2X'0'                YOU GET TO SET UP THIS ONE.         00090200
00017A 68FF                         903 TRPEZOID DC    BL2'0110100011111111'                                    00090300
00017C 00000000
000180 413243F3E0370CDD             904 PI       DC    D'3.14159'                                               00090400
```

```
 LOC   OBJECT CODE    ADDR1 ADDR2  STMT   SOURCE STATEMENT                                    F08APR70   9/17/70

                                   906 *-------------------------------------------------------------------- 00090600
                                   907 *                                                                     00090700
                                   908 *        TO SEE EXACTLY HOW THE ROUTINE WORKS, LET'S TAKE ONE OF THE  00090800
                                   909 *        FIGURES THROUGH. FOR THE SAKE OF ARGUMENT, WE'LL TAKE THE    00090900
                                   910 *        CIRCLE, SINCE IT'S THE FIRST IN THE LIST. FIRST, LET'S       00091000
                                   911 *        CONSIDER WHAT THE PROGRAMMER USING THE ROUTINE WOULD WRITE.  00091100
                                   912 *                                                                     00091200
000188 6800 C192            00198  913          LD    R0,DIAMETER                                            00091300
00018C 45E0 C13C            00142  914          BAL   R14,AREAS                                              00091400
000190 0000                        915          DC    H'0'          DISPLACEMENT TO THE CIRCLE MASK IN TABLE. 00091500
000192 47F0 C19E            001A4  916          B     LOCATION                                               00091600
000196 0000
000198 4219722D0E560419            917 DIAMETER DC    D'25.446'        DIAMETER OF SOME CIRCLE             00091700
                                   918 *                                                                     00091800
                                   919 *        THEN THE 'AREAS' ROUTINE WOULD GET CONTROL AND PICK UP THE   00091900
                                   920 *        MASK LABELED 'CIRCLE'. AT THE FIRST BXH, BIT 'A' WOULD BECOME 00092000
                                   921 *        THE SIGN, AND SINCE WE HAD WANTED TO HALVE THE DIAMETER TO   00092100
                                   922 *        GET THE RADIUS, WE WANT TO FALL THROUGH AND EXECUTE THE 'HDR' 00092200
                                   923 *        INSTRUCTION. BECAUSE WE HAD WANTED THIS, THE MASK FOR THE    00092300
                                   924 *        CIRCLE HAD CONTAINED A '1' BIT IN POSITION 'A', PREVENTING US 00092400
                                   925 *        FROM BRANCHING. THE NEXT OPERATION,(ADD SIDE ONE TO SIDE TWO), 00092500
                                   926 *        IS NOT A PART OF FINDING THE AREA OF A CIRCLE, SO , WE WANT  00092600
                                   927 *        TO SKIP OVER THIS. WE ACCOMPLISH THE SKIP BY PUTTING A '0' IN 00092700
                                   928 *        BIT POSITION 'B' OF THE MASK, AND, AS YOU REMEMBER, A '0'    00092800
                                   929 *        GOING INTO THE SIGN POSITION OF THE REGISTER CAUSES OUR BXH  00092900
                                   930 *        INSTRUCTION TO BRANCH. OK, YOU SHOULD SEE THE LOGIC BY NOW,  00093000
                                   931 *        SO ANSWER QUESTION 9.14, WHICH IS A CONTINUATION OF THE CIRCLE 00093100
                                   932 *        PROBLEM SOLUTION WE HAVE BEEN DOING.                         00093200
                                   933 *                                                                     00093300
                                   934 *-------------------------------------------------------------------- 00093400


                                   936 ************************* QUESTION 9.14 ******************************** 00093600
                                   937 *                                                                     00093700
                                   938 *        WHAT ARE THE LABELS ON THE BXH INSTRUCTIONS THAT WILL        00093800
                                   939 *        NOT CAUSE A BRANCH TO BE TAKEN DURING THE SOLUTION OF THE    00093900
                                   940 *        AREA OF THE CIRCLE? ASSUME THAT WE HAVE ALREADY EXECUTED THE 00094000
                                   941 *        FIRST TWO, AS IN THE INSTRUCTIONS IN THE PARAGRAPH ABOVE.    00094100
                                   942 *                                                                     00094200
                                   943 ********************************************************************** 00094300
```

```
LOC  OBJECT CODE    ADDR1 ADDR2  STMT   SOURCE STATEMENT                                    F08APR70   9/17/70

                                 945 *.......................................................... 00094500
                                 946 *        ANSWER 9.14                                       00094600
                                 947 *                                                          00094700
                                 948 *        BECAUSE BOTH BITS 'C' AND 'E' IN THE 'CIRCLE' MASK ARE 1'S,  00094800
                                 949 *        THE BRANCHES LABELED 'NOADD' AND 'NOMLTPLY' WILL NOT BRANCH,  00094900
                                 950 *        CAUSING US TO SQUARE THE RADIUS AND MULTIPLY BY PI.  00095000
                                 951 *                                                          00095100
                                 952 *.......................................................... 00095200


                                 954 ************************ QUESTION 9.15 ****************************** 00095400
                                 955 *                                                          00095500
                                 956 *        CONSTRUCT THE BIT MASK REQUIRED TO FIND THE AREA OF THE  00095600
                                 957 *        TRIANGLE. USE THE FORMULA AND REGISTER CONTENTS AS DESCRIBED  00095700
                                 958 *        IN THE PROLOGUE OF THIS ROUTINE.                  00095800
                                 959 *                                                          00095900
                                 960 ********************************************************** 00096000
                                 961 *                                                          00096100
                                 962 ********************************************************** 00096200
```

```
LOC  OBJECT CODE    ADDR1 ADDR2  STMT   SOURCE STATEMENT                                    F08APR70   9/17/70

                                  964 *.......................................................... 00096400
                                  965 *        ANSWER 9.15                                        00096500
                                  966 *                                                           00096600
                                  967 *        TRIANGLE DC    BL2'010010XXXXXXXXX1'                00096700
                                  968 *                                                           00096800
                                  969 *        THIS ALLOWS US TO FALL THROUGH BXH 'A' AND HALVE REGISTER 0   00096900
                                  970 *        WHICH CONTAINS THE HEIGHT, TAKE BXH'S 'B' AND 'C', SKIPPING   00097000
                                  971 *        OVER THE UNDESIRED ADDITION AND SQUARING, FALL THROUGH BXH    00097100
                                  972 *        'D', MULITIPLYING THE HEIGHT (WHICH WE PREVIOUSLY HALVED) BY  00097200
                                  973 *        THE BASE, GIVING US THE DESIRED AREA. NATURALLY, WE WANT TO   00097300
                                  974 *        TAKE BXH 'E', BECAUSE WE ARE ALREADY FINISHED.                00097400
                                  975 *.......................................................... 00097500


                                  977 *++++++++++++++++++++++++++++++++++++++++++++++++++++++++++++++++++++ 00097700
                                  978 *        THE OPERATION OF THE BXLE INSTRUCTION IS NEARLY IDENTICAL TO  00097800
                                  979 *        THAT OF THE BXH. THAT IS TO SAY,                              00097900
                                  980 *        1) THE 'INCREMENT' IS ADDED TO THE 'INDEX'.                   00098000
                                  981 *        2) THE NEW 'INDEX' IS COMPARED TO THE 'COMPARAND'.            00098100
                                  982 *        3) THE BRANCH IS TAKEN IF THE NEW 'INDEX' VALUE IS LESS THAN  00098200
                                  983 *           OR EQUAL TO THE 'COMPARAND'.                               00098300
                                  984 *        NOTICE THAT ONLY THE TEXT OF LINE (3) CHANGED FROM THE        00098400
                                  985 *        DESCRIPTION OF THE BXH INSTRUCTION.                           00098500
                                  986 *                                                                      00098600
                                  987 *        O.K. THEN, FROM THIS DIFFERENCE, WE CAN DERIVE A RULE FOR     00098700
                                  988 *        THE BXLE WHERE THE SAME ODD-NUMBERED REGISTER IS USED FOR     00098800
                                  989 *        BOTH THE 'A' AND 'B' OPERANDS.                                00098900
                                  990 *                                                                      00099000
                                  991 *                  ************************                            00099100
                                  992 *                  * BXLE AXIOM NUMBER ONE. *                          00099200
                                  993 *                  * ---- ----- ------ ---- *                          00099300
                                  994 *                  ************************                            00099400
                                  995 *        THE BRANCH WILL BE TAKEN WHENEVER A ONE BIT IS SHIFTED INTO   00099500
                                  996 *        THE SIGN POSITION OF THE REGISTER USED IN A BXLE OF THE FORM: 00099600
                                  997 *                                                                      00099700
                                  998 *        BXLE  ODDREG,ODDREG,LOCATION                                  00099800
                                  999 *                                                                      00099900
                                 1000 *        TO VERIFY YOUR UNDERSTANDING OF THIS, ANSWER QUESTION 9.16.   00100000
                                 1001 ********************************************************************** 00100100


                                 1003 ************************ QUESTION 9.16 ***************************** 00100300
                                 1004 *        TO SHOW THE SIMILARITY OF OPERATION BETWEEN BXH AND BXLE,     00100400
                                 1005 * GIVEN: REGISTER 5 CONTAINS 264833.                                  00100500
                                 1006 *        REGISTER 8 CONTAINS -345221.                                  00100600
                                 1007 *        REGISTER 9 CONTAINS -80388.                                   00100700
                                 1008 *        WILL I BRANCH TO 'INDX5LO#', WHEN THE FOLLOWING INSTRUTION    00100800
                                 1009 *        IS EXECUTED ?                                                 00100900
                                 1010 ********************************************************************** 00101000
                                 1011 *                                                                     00101100
                                 1012 ********************************************************************** 00101200
0001A0 8758 C1C6          001CC  1013          BXLE  5,8,INDX5LO#                                          00101300
```

```
LOC   OBJECT CODE    ADDR1 ADDR2  STMT   SOURCE STATEMENT                                          F08APR70   9/17/70

                                  1015 *.......................................................... 00101500
                                  1016 *        ANSWER 9.16                                        00101600
                                  1017 *                                                           00101700
                                  1018 *        YES, BECAUSE 264833 + (-345221) IS EQUAL TO -80388.  00101800
                                  1019 *                     REG.5  +  REG.8    IS EQUAL TO  REG.9.  00101900
                                  1020 *                                                           00102000
                                  1021 *.......................................................... 00102100


                                  1023 ************************* QUESTION 9.17 ****************************** 00102300
                                  1024 *                                                                   00102400
                                  1025 *        WHAT WILL BE THE VALUE IN REGISTER 5 WHEN THE INSTRUCTION  00102500
                                  1026 *        CALLED 'ENDALL' IS EXECUTED ??                             00102600
                                  1027 *                                                                   00102700
                                  1028 ************************************************************************ 00102800
                                  1029 *                                                                   00102900
                                  1030 ************************************************************************ 00103000


0001A4                            1032 LOCATION EQU    *                                                 00103200
0001A4 1B55                       1033 PASSCONS SR     5,5                                               00103300
0001A6 5870 C222          00228   1034          L      7,=X'A7053200'                                    00103400
0001AA 8777 C1AC          001B2   1035 BXLE1    BXLE   7,7,BXLE2                                         00103500
0001AE 4A50 C226          0022C   1036          AH     5,=H'12'                                          00103600
0001B2 8777 C1B4          001BA   1037 BXLE2    BXLE   7,7,BXH1                                          00103700
0001B6 4A50 C228          0022E   1038 ADD2     AH     5,=H'2'                                           00103800
0001BA 8677 C1B0          001B6   1039 BXH1     BXH    7,7,ADD2                                          00103900
0001BE 8777 C1C0          001C6   1040 BXLE3    BXLE   7,7,*+8                                           00104000
0001C2 4B50 C22A          00230   1041          SH     5,=H'3'                                           00104100
0001C6 000C                       1042 TAKEDUMP DC     H'0'                                              00104200
0001C8 47F0 C1C6          001CC   1043 ENDALL   B      COMPLETE                                          00104300
```

```
  LOC  OBJECT CODE    ADDR1 ADDR2  STMT   SOURCE STATEMENT                                               F08APR70   9/17/70

                                   1045 *....................................................................... 00104500
                                   1046 *         ANSWER 9.17                                                     00104600
                                   1047 *                                                                         00104700
                                   1048 *         REGISTER 5 EQUALS 16.                                           00104800
                                   1049 *                                                                         00104900
                                   1050 *         THE FOLLOWING SHOWS THE SEQUENCE OF EVENTS THAT TOOK PLACE      00105000
                                   1051 *         IN THE EXECUTION OF THE CODE FOR QUESTION 9.17.                 00105100
                                   1052 *                                                                         00105200
                                   1053 *         LABEL    | NEW SIGN |  ACTION TAKEN       | REG.5 = |          00105300
                                   1054 *         ---------+----------+--------------------+---------¬          00105400
                                   1055 *         BXLE1    |    0     | NO BRANCH           |   0     |          00105500
                                   1056 *         ---------+----------+--------------------+---------¬          00105600
                                   1057 *         BXLE2    |    1     | BRANCH TO BXH1      |  12     |          00105700
                                   1058 *         ---------+----------+--------------------+---------¬          00105800
                                   1059 *         BXH1     |    0     | BRANCH TO ADD2      |  12     |          00105900
                                   1060 *         ---------+----------+--------------------+---------¬          00106000
                                   1061 *         BXH1     |    0     | BRANCH TO ADD2      |  14     |          00106100
                                   1062 *         ---------+----------+--------------------+---------¬          00106200
                                   1063 *         BXH1     |    1     | NO BRANCH           |  16     |          00106300
                                   1064 *         ---------+----------+--------------------+---------¬          00106400
                                   1065 *         BXLE3    |    1     | BRANCH TO TAKEDUMP|  16     |          00106500
                                   1066 *                                                                         00106600
                                   1067 *....................................................................... 00106700


                                   1069 *&&&&&&&&&&&&&&&&&&&&&&&&&&&&&&&&&&&&&&&&&&&&&&&&&&&&&&&&&&&&&&&&&&&&&&& 00106900
                                   1070 *                                                                         00107000
                                   1071 *         THIS CONCLUDES THE WORK PROJECT FOR THE BRANCHING AND           00107100
                                   1072 *         SWITCHING SECTION OF THE COURSE. SO THAT YOUR INSTRUCTOR        00107200
                                   1073 *         KNOWS THAT YOU ARE FINISHED, DISPLAY THE WHITE SIDE OF          00107300
                                   1074 *         THE "ANSWER CUE" AT THIS TIME.                                  00107400
                                   1075 *                                                                         00107500
                                   1076 *&&&&&&&&&&&&&&&&&&&&&&&&&&&&&&&&&&&&&&&&&&&&&&&&&&&&&&&&&&&&&&&&&&&&&&& 00107600


0001CC                             1078 COMPLETE EQU   *                                                          00107800
0001CC                             1079 INDX5LO# EQU   *                                                          00107900
0001CC 58DD 0004            00004  1080          L     13,4(13)                                                   00108000
0001D0 98EC D00C            0000C  1081          LM    14,12,12(13)                                               00108100
0001D4 07FE                        1082          BR    14                                                         00108200
0001D8                             1083 BRSAVE   DS    18F                                                        00108300
000000                             1084          END   BRANCHES                                                   00108400
000220 00000000                    1085                =F'0'
000224 00000004                    1086                =F'4'
000228 A7053200                    1087                =X'A7053200'
00022C 000C                        1088                =H'12'
00022E 0002                        1089                =H'2'
000230 0003                        1090                =H'3'
```

| POS.ID | REL.ID | FLAGS | ADDRESS |
|---|---|---|---|
| 01 | C2 | 1C | 000028 |

9/17/70

| SYMBOL | LEN | VALUE | DEFN | REFERENCES | | | | | | |
|---|---|---|---|---|---|---|---|---|---|---|
| ADDRESS | 00001 | 000088 | 00296 | 0171 | 0176 | 0198 | 0203 | | | |
| ADD2 | 00004 | 0001B6 | 01038 | 1039 | | | | | | |
| AHIGHER | 00001 | 0000C8 | 00359 | 0350 | | | | | | |
| ALLFOLKS | 00004 | 00016E | 00892 | 0890 | | | | | | |
| ALOWER | 00001 | 0000C6 | 00355 | 0354 | | | | | | |
| AREAS | 00004 | 000142 | 00864 | 0914 | | | | | | |
| BADBAD | 00001 | 0000FA | 00431 | | | | | | | |
| BEGONE | 00001 | 000052 | 00114 | 0111 | | | | | | |
| BLEAH | 00001 | 000126 | 00519 | 0466 | | | | | | |
| BRANCH | 00004 | 0000C2 | 00354 | 0349 | | | | | | |
| BRANCHES | 00001 | 000000 | 00002 | 1084 | | | | | | |
| BRSAVE | 00004 | 0001D8 | 01083 | 0006 | | | | | | |
| BRTABLE | 00004 | 0000F2 | 00429 | 0428 | | | | | | |
| BR14 | 00002 | 00002C | 00017 | 0014 | 0015 | | | | | |
| BTABLE | 00004 | 0000FA | 00459 | 0459 | | | | | | |
| BXH1 | 00004 | 0001BA | 01039 | 1037 | | | | | | |
| BXLE1 | 00004 | 0001AA | 01035 | | | | | | | |
| BXLE2 | 00004 | 0001B2 | 01037 | 1035 | | | | | | |
| BXLE3 | 00004 | 0001BE | 01040 | | | | | | | |
| BYPASSIT | 00004 | 00004A | 00112 | 0110 | | | | | | |
| BYTE0 | 00001 | 000066 | 00139 | 0134 | 0137 | | | | | |
| CIRCLE | 00002 | 000172 | 00899 | | | | | | | |
| CLOSE | 00001 | 000126 | 00514 | 0461 | | | | | | |
| COMPLETE | 00001 | 0001CC | 01078 | 1043 | | | | | | |
| COOLCOOL | 00001 | 000126 | 00513 | 0460 | | | | | | |
| DIAMETER | 00008 | 000198 | 00917 | 0913 | | | | | | |
| DISASTER | 00001 | 000126 | 00522 | 0469 | | | | | | |
| DONTDOIT | 00004 | 00003E | 00074 | 0071 | | | | | | |
| DONTDOME | 00004 | 000098 | 00302 | 0306 | | | | | | |
| ENDALL | 00004 | 0001C8 | 01043 | | | | | | | |
| ENUF4JAZ | 00001 | 000126 | 00515 | 0462 | | | | | | |
| EXAMPLE1 | 00004 | 000078 | 00197 | 0138 | | | | | | |
| F15 | 00004 | 0000A4 | 00305 | 0302 | | | | | | |
| F240 | 00004 | 0000A0 | 00304 | 0300 | | | | | | |
| GETSCOLD | 00001 | 000126 | 00517 | 0464 | | | | | | |
| GOODASAU | 00001 | 000126 | 00512 | 0407 | 0416 | 0429 | | | | |
| HALFGOOD | 00001 | 0000EE | 00417 | 0409 | 0430 | | | | | |
| HALFPAST | 00001 | 000126 | 00518 | 0465 | | | | | | |
| INDEX3AI | 00001 | 00012E | 00607 | 0599 | | | | | | |
| INDEX3HI | 00001 | 00012A | 00585 | 0577 | | | | | | |
| INDEX4HI | 00001 | 000132 | 00646 | 0638 | | | | | | |
| INDX5LO# | 00001 | 0001CC | 01079 | 1013 | | | | | | |
| LOCATION | 00001 | 0001A4 | 01032 | 0019 | 0391 | 0678 | 0689 | 0718 | 0768 | 0916 |
| MASK1 | 00001 | 0000BE | 00351 | | | | | | | |
| MASK2 | 00001 | 0000BF | 00352 | | | | | | | |
| MASK3 | 00001 | 000000 | 00353 | | | | | | | |
| MEDIOCRE | 00001 | 000126 | 00516 | 0463 | | | | | | |
| MSKTABLE | 00002 | 000172 | 00894 | 0865 | | | | | | |
| NOADD | 00004 | 00015A | 00880 | 0875 | | | | | | |
| NOHALVE | 00004 | 000154 | 00875 | 0870 | | | | | | |
| NOMLTPLY | 00004 | 000166 | 00890 | 0885 | | | | | | |
| NOSQUARE | 00004 | 000160 | 00885 | 0880 | | | | | | |
| OPCDSW1 | 00004 | 000068 | 00170 | | | | | | | |
| OPCDSW2 | 00004 | 000070 | 00175 | | | | | | | |
| PASSCONS | 00002 | 0001A4 | 01033 | | | | | | | |

9/17/70

| SYMBOL | LEN | VALUE | DEFN | REFERENCES | | | | | | | | | | | | | |
|---|---|---|---|---|---|---|---|---|---|---|---|---|---|---|---|---|---|
| PHOOEY | 00001 | 000E2 | 00410 | 0398 | 0415 | | | | | | | | | | | | |
| PI | 00008 | 000180 | 00904 | 0891 | | | | | | | | | | | | | |
| PICKUP15 | 00002 | 00008A | 00298 | 0301 | | | | | | | | | | | | | |
| RECTNGLE | 00002 | 000176 | 00901 | | | | | | | | | | | | | | |
| ROTTEN | 00001 | 000126 | 00521 | 0468 | | | | | | | | | | | | | |
| R0 | 00001 | 000000 | 00858 | 0871 | 0871 | 0881 | 0881 | 0886 | 0891 | 0913 | | | | | | | |
| R1 | 00001 | 000001 | 00859 | 0864 | 0865 | 0865 | 0866 | 0870 | 0870 | 0875 | 0875 | 0880 | 0880 | 0885 | 0885 | 0890 | 0890 |
| R14 | 00001 | 00000E | 00862 | 0864 | 0892 | 0914 | | | | | | | | | | | |
| R2 | 00001 | 000002 | 00860 | 0876 | 0886 | | | | | | | | | | | | |
| R4 | 00001 | 000004 | 00861 | 0876 | | | | | | | | | | | | | |
| SQUARE | 00002 | 000174 | 00900 | | | | | | | | | | | | | | |
| SWITCH | 00004 | 000032 | 00071 | 0072 | 0073 | 0074 | | | | | | | | | | | |
| SWITCH2 | 00004 | 000042 | 00110 | 0112 | 0113 | | | | | | | | | | | | |
| SWITCH3 | 00004 | 0000A8 | 00306 | 0299 | 0303 | | | | | | | | | | | | |
| TAKEDUMP | 00002 | 0001C6 | 01042 | | | | | | | | | | | | | | |
| TEST@SET | 00004 | 000052 | 00134 | 0136 | | | | | | | | | | | | | |
| TRIANGLE | 00001 | 000178 | 00902 | | | | | | | | | | | | | | |
| TRPEZOID | 00002 | 00017A | 00903 | | | | | | | | | | | | | | |
| VCONSVC3 | 00004 | 000028 | 00016 | 0013 | | | | | | | | | | | | | |
| WALKONBY | 00004 | 00005E | 00137 | 0135 | | | | | | | | | | | | | |
| YECHHH | 00001 | 000126 | 00520 | 0467 | | | | | | | | | | | | | |

NO STATEMENTS FLAGGED IN THIS ASSEMBLY
*STATISTICS* SOURCE RECORDS (SYSIN) = 1084
*OPTIONS IN EFFECT* LIST, NODECK, LOAD, NORENT, XREF, NOTEST, ALGN, OS, LINECNT = 55
1206 PRINTED LINES

```
F44-LEVEL LINKAGE EDITOR OPTIONS SPECIFIED MAP,LET,LIST,NCAL
          VARIABLE OPTIONS USED -  SIZE=(45056,6144)-          DEFAULT OPTION(S) USED
IEW0000             ENTRY UTILITY

                                                    MODULE MAP

 CONTROL SECTION                        ENTRY

   NAME     ORIGIN  LENGTH                NAME   LOCATION     NAME   LOCATION     NAME   LOCATION     NAME   LOCATION

 BRANCHES       00     232
 UTILITY       238     5A0
                                        PRINT        29A    PCHKRETN     4F6

 ENTRY ADDRESS       238
 TOTAL LENGTH        7D8

****GO        DOES NOT EXIST BUT HAS BEEN ADDED TO DATA SET
```

```
F.P. REGS.  00.03EC9A 1207E260   00.000075 00000088   00.130190 C2C2C2C1   C3.C8C3C9 C3C3C2C3

REGS 0-7     FFFFFF2E 0006BFF8 0C01D454 00000000    00013CA0 00000010 0001C888 C14C8000
REGS 8-15    0001D438 00000000 0001D460 00000000    6F05F82E 0005FA00 0000C7D4 0005FD1E

000000    00000000 00000000 00000000 00000000    0005F828 00000000 FFC60000 80000000  *.................8............*
000020    C0040003 50006A3E FFC50001 6F05F9F0    000CFF00 00000000 FE040131 80000A1E  *.........E....90................*
000040    A0001360 08000000 A0001358 0C005920    02C018A4 000C996C 00040000 00007498  *...............................*
000060    00040000 000C7BC8 00040000 00007588    00000000 00012D10 00040000 0000751A  *.......H......................*

05F820    9932D202 41526C0D 90ECD00C 05C041F0    C1D250DF 000450FD 000818DF D703D008  *..K............0AK..........P...*
05F840    D00858F0 C022D201 F000C026 47F0C028    0005FD1E 07FE47F0 C19E4700 C03896F0  *...0..K.0....0.........0A......0*
05F860    C02D47F0 C02C940F C02D47F0 C04447F0    C04C97F0 C03D47F0 C03C9300 C0604740  *...0.......0...0...0...0....... *
05F880    C05847F0 C04C9400 C06047F0 C0720000    97F0C067 470CC082 97F0C06F 47F0C082  *...0.......0.....0.......0...0..*
05F8A0    9706C072 4770C082 9706C07A 4780C082    1BEE18FE 44F0C0A2 56E0C09A 47F0C084  *.....................0.......0..*
05F8C0    54E0C09E 47F0C0A6 00000000 0000000F    4700C092 4120000A 41300014 192344F0  *.....0.....0...................0*
05F8E0    C0BC47F0 C0C28040 20004700 C0C01A32    47F0C19E 12FF4770 C0DC59F0 C21A4780  *...0.B. .........0A........0B...*
05F900    C12C59F0 C21E4780 C0E859F0 C21E4720    C0DC4740 C12047FF C0EC47F0 C12047F0  *A..0B....Y.0B...... A......0A..0*
05F920    C0E847FF C0F447F0 C12047F0 C12047F0    C12047F0 C12047F0 C12047F0 C12047F0  *.Y...4.0A..0A..0A..0A..0A..0A..0*
05F940    C12047F0 C12047F0 C12047F0 C1208634    C1248634 C1288645 C12C8633 C19E8633  *A..0A..0A..0A...A...A...A...A...*
05F960    C19E8633 C19E8633 C19E481E 00004811    C16C8910 00108611 C14E24C0 8611C154  *A...A...A.......A.......A.....A.*
05F980    2A248611 C15A2C00 8611C160 2C028611    C1686C00 C17A47FE 000254FF 10FF08FF  *....A.....A.....A...A..........*
05F9A0    000068FF 00000000 413243F3 F0370CDD    6800C192 45E0C13C 000047F0 C19E0000  *...........3......A...A....0A...*
05F9C0    4219722D 0E560419 8758C1C6 1B555870    C2228777 C1AC4A50 C2268777 C1B44A50  *..........AF....B...A...B...A...*
05F9E0    C2288677 C1B08777 C1C04B50 C22A0000    47F0C1C6 58DD0004 98ECD00C 07FE5000  *B...A...A...B....0AF...........*
05FA00    41505001 0006BF68 00000000 12334780    94261B11 16134106 00000A4E 58F0703C  *..............................0..*
05FA20    9104F089 47809426 4150501E 58F00010    58F0F03C 9108F089 4780946C 58304138  *..0..........0...00...0........*
05FA40    12334780 946C1211 00000000 00000004    A7053200 000C0002 00035001 926B5000  *...............................*
05FA60    90ECD00C 05C004F0 07C04110 C0100511    0F05FB04 7FFF0A0E 58B00010 9110B074  *.......C......................*

060020    4A009BDE 40050000 47F095C6 48609BEE    8A600001 4770969E 48609C26 41660001  *.... ....0.F..................*
```



**********

```
LL            OOOOOOOOOOOO  OOOOOOOOOOOO  PPPPPPPPPPP    SSSSSSSSS                WW        WW  PPPPPPPPPPP
LL            OOOOOOOOOOOO  OOOOOOOOOOOO  PPPPPPPPPPPP  SSSSSSSSSSS               WW        WW  PPPPPPPPPPPP
LL            OO        OO  OO        OO  PP        PP  SS        SS              WW        WW  PP        PP
LL            OO        OO  OO        OO  PP        PP  SS                        WW        WW  PP        PP
LL            OO        OO  OO        OO  PP        PP  SSS                       WW        WW  PP        PP
LL            OO        OO  OO        OO  PPPPPPPPPPPP   SSSSSSSS                 WW        WW  PPPPPPPPPPPP
LL            OO        OO  OO        OO  PPPPPPPPPPP     SSSSSSSS                WW   WW   WW  PPPPPPPPPPP
LL            OO        OO  OO        OO  PP                     SSS              WW  WWWW  WW  PP
LL            OO        OO  OO        OO  PP                      SS              WW WW  WW WW  PP
LL            OO        OO  OO        OO  PP             SS       SS              WWWW    WWWW  PP
LLLLLLLLLLLL  OOOOOOOOOOOO  OOOOOOOOOOOO  PP             SSSSSSSSSSS             WWW      WWW  PP
LLLLLLLLLLLL  OOOOOOOOOOOO  OOOOOOOOOOOO  PP              SSSSSSSSS              WW        WW  PP

                                          9999999999
                                         999999999999
                                         99        99
                                         99        99
                                         99        99
                                         999999999999
                                         999999999999
                                                   99
                                                   99
                                         99        99
                                         999999999999
                                          9999999999
```



**********

EXTERNAL SYMBOL DICTIONARY

| SYMBOL | TYPE | ID | ADDR | LENGTH | LD ID |
|---|---|---|---|---|---|
| LOOPSECT | SD | 01 | 000000 | 000132 | |
| PCHKRETN | ER | 02 | | | |

```
  LOC  OBJECT CODE    ADDR1 ADDR2  STMT   SOURCE STATEMENT                                                F08APR70   9/16/70

000000                                1 LOOPSECT CSECT                                                                  00000100
                                      2          COPY  MHMBEGIN                                                         00000200
000000                                3 R0       EQU   0                                                                00000700
000001                                4 R1       EQU   1                                                                00000800
000002                                5 R2       EQU   2                                                                00000900
000003                                6 R3       EQU   3                                                                00001000
000004                                7 R4       EQU   4                                                                00001100
000005                                8 R5       EQU   5                                                                00001200
000006                                9 R6       EQU   6                                                                00001300
000007                               10 R7       EQU   7                                                                00001400
000008                               11 R8       EQU   8                                                                00001500
000009                               12 R9       EQU   9                                                                00001600
00000A                               13 R10      EQU   10                                                               00001700
00000B                               14 R11      EQU   11                                                               00001800
00000C                               15 R12      EQU   12                                                               00001900
00000D                               16 R13      EQU   13                                                               00002000
00000E                               17 R14      EQU   14                                                               00002100
00000F                               18 R15      EQU   15                                                               00002200
000000 90EC D00C            0000C    19          STM   R14,R12,12(R13)     SAVE THE CALLER'S REGISTERS                  00002400
000004 05C0                          20          BALR  R12,0               ESTABLISH PROGRAM BASE                       00002500
000006                               21          USING *,R12               LET THE ASSEMBLER KNOW.                      00002600
000006 41F0 C0BA            00000    22          LA    R15,SAVEAREA        ADDRESS OF MY SAVE AREA                      00002700
00000A 50FD 0008            00008    23          ST    R15,8(R13)          BACKWARD CHAIN                               00002800
00000E 50DF 0004            00004    24          ST    R13,4(R15)          FORWARD CHAIN                                00002900
000012 18DF                          25          LR    R13,R15             ESTABLISH MY SAVE AREA                       00003000
000014 D703 D008 D008 00008 00008    26          XC    8(4,R13),8(R13)     TERMINATE THE FORWARD CHAIN                  00003100
                                     27 *        END OF STANDARD ENTRY LINKAGE CONVENTIONS.                               00003200
                                     28          PRINT OFF                                                              00000300
```

```
LOC  OBJECT CODE    ADDR1 ADDR2  STMT   SOURCE STATEMENT                                    F08APR70   9/16/70
                                  35 *                    ************************************          00001000
                                  36 *                    * PROGRAM LOOPS WORK-SHOP SAMPLES. *          00001100
                                  37 *                    * ------- ----- ---- ---- -------- *          00001200
                                  38 *                    ************************************          00001300


                                  40 *------------------------------------------------------------------------ 00001500
                                  41 *                                                                          00001600
                                  42 *        IN THE LECTURE SESSION ON LOOPS, YOUR INSTRUCTOR DEFINED          00001700
                                  43 *        TWO NEW TERMS, WHICH WERE DESCRIPTIVE OF CERTAIN TYPES OF         00001800
                                  44 *        LOOPS. THE TERMS WERE: 'LEADING DECISION' AND 'TRAILING           00001900
                                  45 *        DECISION'. KNOWING WHAT YOU DO ABOUT THESE TWO TYPES,             00002000
                                  46 *        DETERMINE WHETHER EACH OF THE LOOPS IN THE FOLLOWING              00002100
                                  47 *        QUESTIONS IS A 'LEADING' OR 'TRAILING' DECISION, AND              00002200
                                  48 *        CIRCLE YOUR CHOICE.                                               00002300
                                  49 *                                                                          00002400
                                  50 *        FOR YOUR INFORMATION, EACH LOOP PERFORMS THE SAME FUNCTION        00002500
                                  51 *        AS EACH OF THE OTHERS, THAT OF SUMMING ALL THE HALF-WORD          00002600
                                  52 *        VALUES LOCATED IN 'LIST1'. THE HALF-WORD CALLED 'LIST1LEN'        00002700
                                  53 *        CONTAINS A NUMBER WHICH TELLS US HOW MANY VALUES ARE TO BE        00002800
                                  54 *        SUMMED FROM 'LIST1'.                                              00002900
                                  55 *                                                                          00003000
                                  56 *        THE CORRECT SUM OF 'LIST1' IS X'F0' OR 240.                       00003100
                                  57 *                                                                          00003200
                                  58 *------------------------------------------------------------------------ 00003300
```

```
 LOC  OBJECT CODE    ADDR1 ADDR2  STMT   SOURCE STATEMENT                                          F08APR70   9/16/70

                                   60 ************************** QUESTION 10.1 ****************************** 00003500
                                   61 *                                                                      00003600
                                   62 *        'EXAMPLEA' IS A (LEADING/TRAILING) DECISION LOOP.             00003700
                                   63 *                                                                      00003800
                                   64 ********************************************************************** 00003900


00002A 4810 C120            00126  66 EXAMPLEA LH    R1,LIST1LEN    GET THE NUMBER OF TERMS.                00004100
00002E 1B22                        67          SR    R2,R2          ZERO RESULT REGISTER                    00004200
                                   68 *                                                                      00004300
000030 1211                        69          LTR   R1,R1          ARE THERE ZERO TERMS TO SUM ??          00004400
000032 4780 C03E            00044  70          BZ    ENDEXA         YES, RESULT IS IN REG 2 ALREADY.        00004500
                                   71 *                                                                      00004600
000036 1B33                        72          SR    R3,R3          INITIALIZE INDEX TO ZERO                00004700
000038 4A23 C102            00108  73 LOOPEXA  AH    R2,LIST1(R3)   ADD A VALUE TO THE SUM.                 00004800
00003C 4133 0002            00002  74          LA    R3,2(R3)       BUMP THE INDEX BY LENGTH OF A HALF-WORD 0000490C
000040 4610 C032            00038  75          BCT   R1,LOOPEXA     CONTINUE SUMMATION 'TIL LIST IS EXHAUSTED 00005000
000044                             76 ENDEXA   EQU   *                                                      00005100
000044 0000                        77          DC    H'0'   % % % % % USE THE DUMP TO CHECK THE ANSWER IN R2. 0000520C
```

```
F.P. REGS.  00.000000 00000000   00.000000 00000000   00.000000 00000000   00.000000 05050505

REGS 0-7     FFFFFF2E 00000000 000000F0 0000001E    00015230 00015F98 0001BEC8 00019598
REGS 8-15    0001C260 00000000 0001C288 00000000    6F02A12E 0002A1E8 0000C7D4 0002A51E

000000    00000000 00000000 00000000 00000000    0002A128 00000000 FF060080 80000000  *................................*
000020    0004C003 50006A3E FFC50001 6F02A16E    0000FF00 00000000 FE040230 80000A1E  *.........E......................*
000040    00036C98 0C000001 000014D0 00005920    02C031A4 0000996C C0040000 00007498  *................................*
000060    00040000 00007BC8 00040000 00007588    00000000 00012D10 00040000 0000751A  *.......H......................*

02A120    00000000 00000000 90ECD00C 05C041F0    C0BA50FD 000850DF 000418DF D703D0C8  *...............0............P...*
02A140    D00858F0 C122D201 F000C022 47F0C024    07FE4810 C1201B22 12114780 C03E1B33  *...0A.K.0....0......A...........*
02A160    4A23C102 41330002 4610C032 00004850    C1201B22 1E554780 C0604130 C1021A53  *..A.............A...........A...*
02A180    065C4140 00024A23 00008734 C0580000    4810C120 17221832 12114780 C0804A23  *... ...............A.............*
02A1A0    C1024133 00024B10 C12647F0 C06A0000    D701C120 C12058F0 C122D201 F000C128  *A.......A..0....P.A.A..0A.K.0.A.*
02A1C0    4810C120 1B221B33 4610C0A2 47F0C0AE    4A23C102 4A30C12A 47F0C09A 000058DD  *..A...........0....A...A..0......*
02A1E0    000498EC D00C07FE 00000000 00036768    00000000 00000000 00000000 00000000  *................................*
02A200    00000000 00000000 00000000 00000000    00000000 00000000 00000000 00000000  *................................*
02A220    00000000 00000000 00000000 00000000    001E001C 001A0018 00160014 00120010  *................................*
02A240    000E000C 000A0008 00060004 0002000F    0002A51E 00010A03 00020000 00000000  *................................*
02A260    90ECD00C 05C004F0 07004110 C0100511    0F02A304 7FFF0A0E 58B00010 911CB074  *.......0........................*

02A820    4A009BDE 40050000 47F095C6 48609BEE    8A600001 4770969E 48609C26 41660001  *.... ....0.F...................*
```

```
LOC   OBJECT CODE    ADDR1 ADDR2  STMT   SOURCE STATEMENT                                                F08APR70   9/16/70

                                   79 *.......................................................................  00005400
                                   80 *         ANSWER 10.1                                                   00005500
                                   81 *                                                                       00005600
                                   82 *         'EXAMPLEA' IS A 'TRAILING DECISION' LOOP. NOTICE THAT THE     00005700
                                   83 *         LOOP WILL BE EXITED FROM WHEN THE VALUE IN REGISTER 1 IS      00005800
                                   84 *         EQUAL TO ZERO. ALSC NOTICE THE POSITION OF THE INSTRUCTION    00005900
                                   85 *         THAT ALLOWS US TO GET OUT OF THE LOOP WHEN THIS CONDITION     00006000
                                   86 *         OCCURS (IT IS AFTER THE WORK-PERFORMING PART OF THE LOOP)     00006100
                                   87 *         THEREFORE, THIS IS A 'TRAILING DECISION'.                     00006200
                                   88 *.......................................................................  00006300


                                   90 ************************* QUESTION 10.2 ****************************** 00006500
                                   91 *                                                                       00006600
                                   92 *         'EXAMPLEB' IS A (LEADING/TRAILING) DECISION LOOP.             00006700
                                   93 *                                                                       00006800
                                   94 ********************************************************************** 00006900


000046 4850 C120            00126  96 EXAMPLEB LH    R5,LIST1LEN     GET THE NUMBER OF TERMS.                00007100
00004A 1B22                        97           SR    R2,R2           ZERO THE RESULT REGISTER                00007200
                                   98 *                                                                       00007300
00004C 1E55                        99           ALR   R5,R5           NUMBER OF TERMS TIMES HALF-WORD SIZE. (2) 00007400
00004E 4780 C060            00066 100           BZ    ENDEXB          NO VALUES, EXIT FROM LOOP.              00007500
                                  101 *                                                                       00007600
000052 4130 C102            00108 102           LA    R3,LIST1        GET ADDRESS OF LIST TO BE ADDED.        00007700
000056 1A53                       103           AR    R5,R3           SET UP ADDRESS OF UPPER END OF LIST     00007800
000058 0650                       104           BCTR  R5,0            SUBTRACT 1 FOR BXLE.                    00007900
00005A 4140 0002            00002 105           LA    R4,2            SET INCREMENT FOR INDEXING THRU LIST.   00008000
00005E 4A23 0000            00000 106 LOOPEXB   AH    R2,0(R3)        ADD A VALUE TO THE SUM.                 00008100
000062 8734 C058            0005E 107           BXLE  R3,R4,LOOPEXB   CONTINUE SUMMATION 'TIL LIST IS EXHAUSTED 00008200
000066                            108 ENDEXB    EQU   *                                                     00008300
000066 0000                       109           DC    H'0'    % % % % TAKE A LOOK AT REG. 2 FOR THE SUM.      00008400
```

```
F.P. REGS.  00.000000 00000000   00.000000 00000000   00.000000 00000000   00.000000 05050505

REGS 0-7     FFFFFF2E 00000000 000000F0 0002A24E    00000002 0002A24D 0001BEC8 00019598
REGS 8-15    0001C260 00000000 0001C288 C0000000    6F02A12E 0002A1E8 0000C7D4 0002A51E

000000    00000000 00000000 00000000 00000000    0002A128 C0000000 FF060080 80000000  *................................*
000020    FFC50003 6F007588 FFC50001 6F02A190    0000FF00 00000000 FE040132 80000A06  *.E.......E......................*
000040    D0001360 08000000 E00014D0 00005920    02C031A4 0000996C 00040000 00007498  *................................*
000060    00040000 00007BC8 00040000 00007588    00000000 00012D10 00040000 0000751A  *.......H........................*

02A120    00000000 00000000 90ECD00C 05C041F0    C0BA50FD 0C0850DF 000418DF D703D008  *...............0............P...*
02A140    D00858F0 C122D201 F000C022 47F0C024    07FE4810 C1201B22 12114780 C03E1B33  *...0A.K.0....0......A...........*
02A160    4A23C102 41330002 4610CC32 00004850    C1201B22 1E554780 C0604130 C1021A53  *..A.............A...........A...*
02A180    065C4140 00024A23 00008734 C0580000    4810C120 17221832 12114780 C0804A23  *... ...............A.............*
02A1A0    C1024133 00024B10 C12647F0 C06A0000    D701C120 C12058F0 C122D201 F000C128  *A.......A..0....P.A.A..0A.K.0.A.*
02A1C0    4810C120 1B221B33 4610C0A2 47F0C0AE    4A23C102 4A30C12A 47F0C09A 000C58DD  *..A..........0....A...A..0......*
02A1E0    000498EC D00C07FE 00000C00 00036768    00000000 00000000 00000000 00000000  *................................*
02A200    00000000 00000000 00000000 00000000    00000000 00000000 00000000 00000000  *................................*
02A220    00000000 00000000 00000000 00000000    001E001C 001A0018 00160014 00120010  *................................*
02A240    000E000C 000A0008 00060004 0002000F    0002A51E 00C10A03 00020000 00000000  *................................*
02A260    90ECD00C 05C004F0 07004110 C0100511    0FC2A304 7FFF0A0E 58B00010 911CB074  *.......0........................*

02A820    4A009BDE 40050000 47F095C6 48609BEE    8A6C0001 4770969E 48609C26 416600C1  *.... ....0.F...................*
```

```
LOC   OBJECT CODE    ADDR1 ADDR2  STMT   SOURCE STATEMENT                                          F08APR70   9/16/70

                                  111 *.......................................................... 00008600
                                  112 *        ANSWER 10.2                                        00008700
                                  113 *                                                           00008800
                                  114 *        'EXAMPLEB' IS ALSO A 'TRAILING DECISION' LOOP, BECAUSE THE  00008900
                                  115 *        BXLE INSTRUCTION DECIDES WHEN WE ARE DONE.         00009000
                                  116 *.......................................................... 00009100


                                  118 ************************* QUESTION 10.3 ***************************** 00009300
                                  119 *                                                           00009400
                                  120 *        'EXAMPLEC' IS A (LEADING/TRAILING) DECISION LOOP.  00009500
                                  121 *                                                           00009600
                                  122 ******************************************************************* 00009700


000068 4810 C120           00126  124 EXAMPLEC LH    R1,LIST1LEN    GET NUMBER OF VALUES IN 'LIST1'.   00009900
00006C 1722                       125          XR    R2,R2          INITIALIZE SUM TO ZERO.            00010000
00006E 1832                       126          LR    R3,R2          INITIALIZE INDEX REGISTER TO ZERO. 00010100
000070 1211                       127 LOOPEXC  LTR   R1,R1          ARE THERE ANY VALUES LEFT ??       00010200
000072 4780 C080           00086  128          BZ    ENDEXC         NO, EXIT FROM THE LOOP.            00010300
000076 4A23 C102           00108  129          AH    R2,LIST1(R3)   YES, ADD A VALUE TO THE SUM.       00010400
00007A 4133 0002           00002  130          LA    R3,2(R3)       BUMP THE INDEX BY THE SIZE OF A HALF-WORD 00010500
00007E 4B10 C126           0012C  131          SH    R1,=H'1'       REDUCE COUNT OF REMAINING VALUES BY 1. 00010600
000082 47F0 C06A           00070  132          B     LOOPEXC        AND CONTINUE SUMMING TO END OF 'LIST1'. 00010700
000086                            133 ENDEXC   EQU   *                                              00010800
000086 0000                       134          DC    H'0'    % % % % LOOK AT THE VALUE OF REG. 2 IN THE DUMP. 00010900
```

```
F.P. REGS.  00.000000 00000000   00.000000 00000000   00.000000 00000000   00.000000 05050505

REGS 0-7     FFFFFF2E 00000000 000000F0 0000001E    00000002 0002A24D 0001BEC8 00019598
REGS 8-15    0001C260 00000000 0001C288 00000000    6F02A12E 0002A1E8 0000C7D4 C002A51E

000000    00000000 00000000 00000000 00000000    0002A128 00000000 FF060080 80000000  *................................*
000020    FFC50003 6F007588 FFC50001 4F02A1B0    0000FF00 00000000 FF050232 B004ED56  *.E.......E......................*
000040    00000000 04000000 000014D0 00005920    02C004A4 0000996C 00040000 00007498  *................................*
000060    00040000 00007BC8 00040000 00007588    00000000 00012D10 C0040000 0000751A  *.......H........................*

02A120    00000000 00000000 90ECD000 05C041F0    C0BA50FD 000850DF 000418DF D703D008  *...............0............P...*
02A140    D00858F0 C122D201 F000C022 47F0C024    07FE4810 C1201B22 12114780 C03E1B33  *...0A.K.0....0......A...........*
02A160    4A23C102 41330002 4610C032 00004850    C1201B22 1E554780 C0604130 C1021A53  *..A.............A...........A...*
02A180    06504140 00024A23 00008734 C0580000    4810C120 17221832 12114780 C0804A23  *... ...............A.............*
02A1A0    C1024133 00024B10 C12647F0 C06A0000    D701C120 C12058F0 C122D201 F000C128  *A.......A..0....P.A.A..0A.K.0.A.*
02A1C0    4810C120 1B221B33 4610C0A2 47F0C0AE    4A23C102 4A30C12A 47F0C09A 000058DD  *..A..........0....A...A..0......*
02A1E0    000498EC D00C07FE 00000000 00036768    00000000 00000000 00000000 00000000  *................................*
02A200    00000000 00000000 00000000 00000000    00000000 00000000 00000000 00000000  *................................*
02A220    00000000 00000000 00000000 00000000    001E0C1C 00A00018 00160014 00120010  *................................*
02A240    000E0000 000A0008 0006C004 0002000F    0002A51E 00010A03 00020000 00000000  *................................*
02A260    90ECD000 05C004F0 07004110 C0100511    0F02A304 7FFF0A0E 58B00010 9110B074  *.......0........................*

02A820    4A009BDE 40050000 47F095C6 48609BEE    8A600001 4770969E 48609C26 41660001  *.... ....0.F....................*
```

```
LOC   OBJECT CODE    ADDR1 ADDR2  STMT   SOURCE STATEMENT                                                F08APR70   9/16/70

                                  136 *.......................................................................  00011100
                                  137 *        ANSWER 10.3                                                    00011200
                                  138 *                                                                       00011300
                                  139 *        'EXAMPLEC' IS A 'LEADING DECISION' LOOP, BECAUSE THE VALUE     00011400
                                  140 *        OF REGISTER 1 (WHICH CONTROLS THE LOOP) IS CHECKED AT THE      00011500
                                  141 *        START OF THE LOOP, BEFORE ANY OF THE OPERATION OF SUMMING      00011600
                                  142 *        IS BEGUN.                                                      00011700
                                  143 *.......................................................................  00011800


000088 D701 C120 C120 00126 00126  145          XC    LIST1LEN,LIST1LEN                                     00012000
                                  146          PRINT OFF                                                     00012100
                                  150 ************************* QUESTION 10.4 ******************************  00012500
                                  151 *                                                                       00012600
                                  152 *        'EXAMPLED' IS A (TRAILING/LEADING) DECISION LOOP.              00012700
                                  153 *                                                                       00012800
                                  154 ***********************************************************************  00012900


000098 4810 C120            00126  156 EXAMPLED LH    R1,LIST1LEN     GET NUMBER OF VALUES IN 'LIST1'.      00013100
00009C 1B22                        157          SR    R2,R2           ZERO THE ACCUMULATOR.                 00013200
00009E 1B33                        158          SR    R3,R3           ZERO THE INDEX REGISTER.              00013300
0000A0 4610 00A2            000A8  159 LOOPEXD  BCT   R1,LOOPD2       TEST THE NUMBER REMAINING.            00013400
0000A4 47F0 00AE            000B4  160          B     ENDEXD          ALL DONE, EXIT FROM LOOP.             00013500
0000A8 4A23 C102            00108  161 LOOPD2   AH    R2,LIST1(R3)    ADD A VALUE TO THE SUM.               00013600
0000AC 4A30 C12A            00130  162          AH    R3,=H'2'        BUMP INDEX BY LENGTH OF A HALF-WORD.  00013700
0000B0 47F0 00A0            000A0  163          B     LOOPEXD         CONTINUE UNTIL 'LIST1' IS EXHAUSTED.  00013800
0000B4                             164 ENDEXD   EQU   *                                                     00013900
0000B4 0000                        165          DC    H'0'    % % % % CHECK THE VALUE OF REG. 2 IN THIS DUMP.  00014000
```

```
LOC  OBJECT CODE    ADDR1 ADDR2  STMT   SOURCE STATEMENT                                          F08APR70   9/16/70

                                 167 *.......................................................... 00014200
                                 168 *        ANSWER 10.4                                        00014300
                                 169 *                                                           00014400
                                 170 *        'EXAMPLED' IS ALSO AN EXAMPLE OF A 'LEADING DECISION' LOOP.  00014500
                                 171 *        NOTE THAT IT USES THE 'BCT' INSTRUCTION TO DO IT'S DECISION  00014600
                                 172 *        MAKING FOR IT.                                     00014700
                                 173 *                                                           00014800
                                 174 *.......................................................... 00014900


                                 177 ************************* TROUBLE ANALYSIS PROBLEM 10.1 ************** 00015200
                                 178 *                                                           00015300
                                 179 *        LOOK AT THE FOLLOWING DUMP AND FIND OUT WHY 'EXAMPLED'  00015400
                                 180 *        FAILED TO WORK PROPERLY.                           00015500
                                 181 *                                                           00015600
                                 182 ***NOTE: IF YOU FIND YOURSELF HAVING DIFFICULTY GETTING STARTED, THERE  00015700
                                 183 *        IS A SERIES OF QUESTIONS AFTER THE DUMP THAT WILL GUIDE YOU  00015800
                                 184 *        TO THE PROBLEM AND IT'S SOLUTION.                  00015900
                                 185 *                                                           00016000
                                 186 ******************************************************************** 00016100
```

```
F.P. REGS.  00.000000 00000000   00.000000 00000000   00.000000 00000000   00.000000 05050505

REGS 0-7     FFFFFF2E FFFD5117 037FDDC2 00055DD0    00000002 0002A24D 0001BEC8 00019598
REGS 8-15    0001C260 00000000 0001C288 00000000    6F02A12E 0002A1E8 0000C7D4 0002A51E

000000    00000000 00000000 00000000 00000000    0002A128 00000000 FF060000 80000000  *................................*
000020    FFE50001 4007EA2C FFC50005 AF02A1D4    0000FF00 00000000 FFC50132 AF02A1D0  *.V.. ....E.....M.........E......*
000040    00000000 04000000 F00014D0 00005920    02C022A4 0000996C 00040000 00007498  *........O......................*
000060    00040000 00007BC8 00040000 00007588    00000000 00012D10 00040000 0000751A  *.......H......................*

02A120    00000000 00000000 90ECD000 05C041F0    C0BA50FD 000850DF 000418DF D703D008  *...............O............P...*
02A140    D00858F0 C122D201 F000C022 47F0C024    07FE4810 C12C1B22 12114780 C03E1B33  *...0A.K.C....O......A...........*
02A160    4A23C102 41330002 4610C032 00004850    C1201B22 1E554780 C0604130 C1021A53  *..A.............A...........A...*
02A180    06504140 00024A23 00008734 C0580000    4810C120 17221832 12114780 C08C4A23  *... ..............A.............*
02A1A0    C1024133 00024B10 C12647F0 C06A0000    D7C1C120 C12058F0 C122D201 F000C128  *A.......A..O....P.A.A..0A.K.O.A.*
02A1C0    4810C120 1B221B33 4610C0A2 47F0C0AE    4A23C102 4A30C12A 47F0C09A 000058DD  *..A..........O....A...A..O......*
02A1E0    000498EC D00C07FE 00000000 00036768    00000000 00000000 00000000 00000000  *................................*
02A200    00000000 00000000 00000000 00000000    00000000 00000000 00000000 00000000  *................................*
02A220    00000000 00000000 00000000 00000000    001E001C 001A0018 00160014 00120010  *................................*
02A240    000E000C 000A0008 00060004 00020000    0002A51E 00010A03 00020000 00000000  *................................*
02A260    90ECD000 05C004F0 07004110 C0100511    0FC2A304 7FFF0A0E 58800010 9110B074  *.......O......................*

02A820    4A009BDE 40050000 47F095C6 48609BEE    8A600001 4770969E 48609C26 41660001  *.... ....O.F...................*
```



**********

```
LOC  OBJECT CODE    ADDR1 ADDR2  STMT   SOURCE STATEMENT                                          F08APR70   9/16/70

                                 188 ***********************************************************************  00016300
                                 189 *                                                                       00016400
                                 190 *        TO GIVE YOU SOME ASSISTANCE IN ESTABLISHING A DIAGNOSTIC       00016500
                                 191 *        APPROACH TO THE SOLUTION OF PROGRAM POOBLEMS, THE FOLLOWING    00016600
                                 192 *        IS A LIST OF QUESTIONS THAT I WOULD ASK MYSELF IF I WERE       00016700
                                 193 *        DEBUGGING THIS DUMP. THIS, OF COURSE, IS USING THE TECHNIQUE   00016800
                                 194 *        OF REDUCING A PROBLEM TO A SERIES OF PERTINENT QUESTIONS.      00016900
                                 195 *        THE QUESTIONS ARE AS FOLLOWS, AND WOULD BE ASKED IN THE ORDER  00017000
                                 196 *        GIVEN. YOU MAY WRITE YOUR ANSWERS BELOW EACH QUESTION. THE     00017100
                                 197 *        COMPLETE SET OF ANSWERS FOLLOW, BUT YOU SHOULD NOT NEED THEM   00017200
                                 198 *        AS YOU SHOULD BE ABLE TO GENERATE YOUR OWN CORRECT ANSWERS.    00017300
                                 199 *                                                                       00017400
                                 200 *        1. FOR WHAT REASON DID THE PROGRAM ABNORMALLY TERMINATE ?      00017500
                                 201 *           (WHY DID THE DUMP OCCUR ?)                                  00017600
                                 202 *                                                                       00017700
                                 203 *        2. WHERE IN STORAGE DID THIS FAILURE OCCUR (ADDRESS) ?         00017800
                                 204 *                                                                       00017900
                                 205 *        3. WHERE IS THAT IN THE PROGRAM (DISPLACEMENT) ?               00018000
                                 206 *                                                                       00018100
                                 207 *        4. HOW DID THIS INSTRUCTION CAUSE THAT PARTICULAR PROBLEM ?    00018200
                                 208 *                                                                       00018300
                                 209 *        5. HOW COULD REGISTER 3 GET THAT LARGE ?                       00018400
                                 210 *                                                                       00018500
                                 211 *        6. WHAT REGISTER CONTAINS THE COUNT THAT CONTROLS THE LOOP ?   00018600
                                 212 *                                                                       00018700
                                 213 *        7. WHAT DOES IT CURRENTLY CONTAIN ?                            00018800
                                 214 *                                                                       00018900
                                 215 *        8. WHAT VALUE WAS USED TO INITIALIZE REGISTER 1 ?              00019000
                                 216 *                                                                       00019100
                                 217 *        9. WHAT IS THE CURRENT VALUE OF "LIST1LEN" ?                   00019200
                                 218 *                                                                       00019300
                                 219 *        10. SHOULD THAT BE VALID ?                                     00019400
                                 220 *                                                                       00019500
                                 221 *        11. IF IT IS VALID, IT SHOULD BE TESTED FOR IN THE PROGRAM.    00019600
                                 222 *            OK, ADD THE CODE THAT WOULD TEST FOR A ZERO VALUE OF       00019700
                                 223 *            "LIST1LEN", AND YOU WILL HAVE SOLVED THE PROBLEM.          00019800
                                 224 *                                                                       00019900
                                 225 ***********************************************************************  00020000
```

```
LOC  OBJECT CODE    ADDR1 ADDR2  STMT   SOURCE STATEMENT                                        F08APR70   9/16/70
                                 227 ***********************************************************************  00020200
                                 228 *                                                                       00020300
                                 229 *        1. AN ADDRESSING EXCEPTION (PROGRAM CHECK).                    00020400
                                 230 *                                                                       00020500
                                 231 *        2. STORAGE LOCATION X'02A1D0'.                                 00020600
                                 232 *                                                                       00020700
                                 233 *        3. PROGRAM DISPLACEMENT X'A8'. X'02A1D0' - X'02A128' = X'A8'.  00020800
                                 234 *                                                                       00020900
                                 235 *        4. REG 12 + REG 3 + X'102' = X'80000', WHICH IS LARGER THAN    00021000
                                 236 *           ANY ADDRESS IN THIS 512K MACHINE.                           00021100
                                 237 *                                                                       00021200
                                 238 *        5. THE LOOP WAS EXECUTED TOO MANY TIMES.                       00021300
                                 239 *                                                                       00021400
                                 240 *        6. REGISTER 1 CONTROLS THE LOOP.                               00021500
                                 241 *                                                                       00021600
                                 242 *        7. REGISTER 1 CONTAINS A NEGATIVE NUMBER.                      00021700
                                 243 *                                                                       00021800
                                 244 *        8. REGISTER 1 IS LOADED FROM "LIST1LEN".                       00021900
                                 245 *                                                                       00022000
                                 246 *        9. "LIST1LEN" CURRENTLY EQUALS 0.                              00022100
                                 247 *                                                                       00022200
                                 248 *        10. THERE IS NO REASON WHY A VALUE OF ZERO SHOULD BE INVALID,  00022300
                                 249 *            UNLESS THE PROGRAMMER SPECIFICALLY STATES SO.              00022400
                                 250 *                                                                       00022500
                                 251 *        11. LET YOUR INSTRUCTOR CHECK THE EFFECTIVENESS OF THE CODE    00022600
                                 252 *            THAT YOU WOULD LIKE TO ADD TO THE PROGRAM.                 00022700
                                 253 *                                                                       00022800
                                 254 ***********************************************************************  00022900
```

```
LOC  OBJECT CODE    ADDR1 ADDR2  STMT   SOURCE STATEMENT                                    F08APR70   9/16/70

                                 256 ***********************************************************************  00023100
                                 257 *        ANSWER THE FOLLOWING QUESTIONS ABOUT THE PRECEEDING EXAMPLES.  00023200
                                 258 *                                                                       00023300
                                 259 *        1. WHICH INSTRUCTIONS IN "EXAMPLEA" TEST FOR THE "ZERO-        00023400
                                 260 *           SPECIAL CASE" CONDITION ?                                   00023500
                                 261 *                                                                       00023600
                                 262 *        2. WHICH INSTRUCTION(S) SETS UP THE ADDRESS OF THE NEXT ITEM   00023700
                                 263 *           IN THE LIST FOR EACH OF THE FOLLOWING ROUTINES ?            00023800
                                 264 *                                                                       00023900
                                 265 *            A. "EXAMPLEA" ?                                            00024000
                                 266 *            B. "EXAMPLEB" ?                                            00024100
                                 267 *            C. "EXAMPLEC" ?                                            00024200
                                 268 *            D. "EXAMPLED" ?                                            00024300
                                 269 *                                                                       00024400
                                 270 *        3. IN "EXAMPLEB", WOULD THE LOOP STILL WORK IF THE 'ALR'       00024500
                                 271 *           WERE REPLACED BY ' SLL  R5,1 ' ?                            00024600
                                 272 *                                                                       00024700
                                 273 ***********************************************************************  00024800
```

```
LOC  OBJECT CODE    ADDR1 ADDR2  STMT   SOURCE STATEMENT                                    F08APR70   9/16/70

                                 275 *.......................................................... 00025000
                                 276 *                                                          00025100
                                 277 *        ANSWERS FOR THE PROGRAM LOOPS WORK PROJECT.       00025200
                                 278 *                                                          00025300
                                 279 *        1. THE TWO INSTRUCTIONS ' LTR   R1,R1 ' AND ' BZ   ENDEXA '  00025400
                                 280 *           TEST FOR A LIST CONTAINING ZERO ITEMS.         00025500
                                 281 *                                                          00025600
                                 282 *        2. EACH OF THE FOLLOWING BUMPS THE POINTER ADDRESS TO THE  00025700
                                 283 *           NEXT ITEM TO BE HANDLED IN THE LIST.           00025800
                                 284 *           A.    LA    R3,2(R3)                             00025900
                                 285 *           B.    BXLE  R3,R4,LOOPEXB                        00026000
                                 286 *           C.    LA    R3,2(R3)                             00026100
                                 287 *           D.    AH    R3,=H'2'                             00026200
                                 288 *                                                          00026300
                                 289 *        3. NOT COMPLETELY, BECAUSE THE 'ALR' IS BEING USED TO TEST  00026400
                                 290 *           FOR A ZERO ITEM LIST AT THE SAME TIME, AND THE 'SLL'  00026500
                                 291 *           WOULD NOT SET A CONDITION CODE TO INDICATE A ZERO ENTRY  00026600
                                 292 *           LIST.                                          00026700
                                 293 *                                                          00026800
                                 294 *.......................................................... 00026900

000086 58DD 0004          00004  296          L     R13,4(R13)                                  00027100
0000BA 98EC D00C          0000C  297          LM    R14,R12,12(R13)                             00027200
0000BE 07FE                      298          BR    R14                                         00027300

000000                           300 SAVEAREA DS    18F                                         00027500
000108 001E001C001A0018          301 LIST1    DC    15AL2(LIST1LEN-*)   THESE ARE THE VALUES TO BE ADDED.  00027600
000126 000F                      302 LIST1LEN DC    AL2((*-LIST1)/L'LIST1)  NUMBER OF ITEMS TO BE ADDED.  00027700
000000                           303          END   LOOPSECT                                    00027800
000128 00000000                  304                =V(PCHKRETN)
00012C 0001                      305                =H'1'
00012E 0A03                      306                =X'0A03'
000130 0002                      307                =H'2'
```

| POS.ID | REL.ID | FLAGS | ADDRESS |
|---|---|---|---|
| 01 | 02 | 1C | 000128 |

9/16/70

| SYMBOL | LEN | VALUE | DEFN | REFERENCES | | | | | | | | | | | | | | |
|---|---|---|---|---|---|---|---|---|---|---|---|---|---|---|---|---|---|---|
| BR14 | 00002 | 000028 | 00032 | 0030 | 0031 | | | | | | | | | | | | | |
| ENDEXA | 00001 | 000044 | 00076 | 0070 | | | | | | | | | | | | | | |
| ENDEXB | 00001 | 000066 | 00108 | 0100 | | | | | | | | | | | | | | |
| ENDEXC | 00001 | 000086 | 00133 | 0128 | | | | | | | | | | | | | | |
| ENDEXD | 00001 | 0000B4 | 00164 | 0160 | | | | | | | | | | | | | | |
| EXAMPLEA | 00004 | 00002A | 00066 | | | | | | | | | | | | | | | |
| EXAMPLEB | 00004 | 000046 | 00096 | | | | | | | | | | | | | | | |
| EXAMPLEC | 00004 | 000068 | 00124 | | | | | | | | | | | | | | | |
| EXAMPLED | 00004 | 000098 | 00156 | | | | | | | | | | | | | | | |
| LIST1 | 00002 | 000108 | 00301 | 0073 | 0102 | 0129 | 0161 | 0302 | 0302 | | | | | | | | | |
| LIST1LEN | 00002 | 000126 | 00302 | 0066 | 0096 | 0124 | 0145 | 0145 | 0156 | 0301 | | | | | | | | |
| LOOPD2 | 00004 | 0000A8 | 00161 | 0159 | | | | | | | | | | | | | | |
| LOOPEXA | 00004 | 000038 | 00073 | 0075 | | | | | | | | | | | | | | |
| LOOPEXB | 00004 | 00005E | 00106 | 0107 | | | | | | | | | | | | | | |
| LOOPEXC | 00002 | 000070 | 00127 | 0132 | | | | | | | | | | | | | | |
| LOOPEXD | 00004 | 0000A0 | 00159 | 0163 | | | | | | | | | | | | | | |
| LOOPSECT | 00001 | 000000 | 00001 | 0303 | | | | | | | | | | | | | | |
| R0 | 00001 | 000000 | 00003 | | | | | | | | | | | | | | | |
| R1 | 00001 | 000001 | 00004 | 0066 | 0069 | 0069 | 0075 | 0124 | 0127 | 0127 | 0131 | 0156 | 0159 | | | | | |
| R10 | 00001 | 00000A | 00013 | | | | | | | | | | | | | | | |
| R11 | 00001 | 00000B | 00014 | | | | | | | | | | | | | | | |
| R12 | 00001 | 00000C | 00015 | 0019 | 0020 | 0021 | 0297 | | | | | | | | | | | |
| R13 | 00001 | 00000D | 00016 | 0019 | 0023 | 0024 | 0025 | 0026 | 0026 | 0296 | 0296 | 0297 | | | | | | |
| R14 | 00001 | 00000E | 00017 | 0019 | 0032 | 0297 | 0298 | | | | | | | | | | | |
| R15 | 00001 | 00000F | 00018 | 0022 | 0023 | 0024 | 0025 | 0029 | 0030 | 0147 | 0148 | | | | | | | |
| R2 | 00001 | 000002 | 00005 | 0067 | 0067 | 0073 | 0097 | 0097 | 0106 | 0125 | 0125 | 0126 | 0129 | 0157 | 0157 | 0161 | | |
| R3 | 00001 | 000003 | 00006 | 0072 | 0072 | 0073 | 0074 | 0074 | 0102 | 0103 | 0106 | 0107 | 0126 | 0129 | 0130 | 0130 | 0158 | 0158 |
| | | | | 0161 | 0162 | | | | | | | | | | | | | |
| R4 | 00001 | 000004 | 00007 | 0105 | 0107 | | | | | | | | | | | | | |
| R5 | 00001 | 000005 | 00008 | 0096 | 0099 | 0099 | 0103 | 0104 | | | | | | | | | | |
| R6 | 00001 | 000006 | 00009 | | | | | | | | | | | | | | | |
| R7 | 00001 | 000007 | 00010 | | | | | | | | | | | | | | | |
| R8 | 00001 | 000008 | 00011 | | | | | | | | | | | | | | | |
| R9 | 00001 | 000009 | 00012 | | | | | | | | | | | | | | | |
| SAVEAREA | 00004 | 0000C0 | 00300 | 0022 | | | | | | | | | | | | | | |

NO STATEMENTS FLAGGED IN THIS ASSEMBLY
*STATISTICS* SOURCE RECORDS (SYSIN) = 278 SOURCE RECORDS (SYSLIB) = 25
*OPTIONS IN EFFECT* LIST, NODECK, LOAD, NORENT, XREF, NOTEST, ALGN, OS, LINECNT = 55
357 PRINTED LINES

```
 F44-LEVEL LINKAGE EDITOR OPTIONS SPECIFIED MAP,LET,LIST,NCAL
           VARIABLE OPTIONS USED -  SIZE=(45056,6144)-          DEFAULT OPTION(S) USED
IEWC000              ENTRY UTILITY


                                                    MODULE MAP


  CONTROL SECTION                          ENTRY

    NAME     ORIGIN  LENGTH                  NAME    LOCATION     NAME    LOCATION     NAME    LOCATION     NAME    LOCATION

  LOOPSECT       00     132
  UTILITY       138     5A0
                                           PRINT         19A    PCHKRETN      3F6

 ENTRY ADDRESS       138
 TOTAL LENGTH        6D8

****GO        DOES NOT EXIST BUT HAS BEEN ADDED TO DATA SET
```

```
NN        NN  EEEEEEEEEEEE   SSSSSSSSSS   TTTTTTTTTTTT  EEEEEEEEEEEE  DDDDDDDDD
NNN       NN  EEEEEEEEEEEE  SSSSSSSSSSSS  TTTTTTTTTTTT  EEEEEEEEEEEE  DDDDDDDDDD
NNNN      NN  EE            SS        SS      TT       EE            DD       DD
NN NN     NN  EE            SS                TT       EE            DD        DD
NN  NN    NN  EE            SSS               TT       EE            DD        DD
NN   NN   NN  EEEEEEEE       SSSSSSSSS        TT       EEEEEEEE      DD        DD
NN    NN  NN  EEEEEEEE        SSSSSSSSS       TT       EEEEEEEE      DD        DD
NN     NN NN  EE                     SSS      TT       EE            DD        DD
NN      NNNN  EE                      SS      TT       EE            DD        DD
NN       NNN  EE            SS        SS      TT       EE            DD       DD
NN        NN  EEEEEEEEEEEE  SSSSSSSSSSSS      TT       EEEEEEEEEEEE  DDDDDDDDDD
NN         N  EEEEEEEEEEEE   SSSSSSSSSS       TT       EEEEEEEEEEEE  DDDDDDDDD
```

```
 9999999999
999999999999
99        99
99        99
99        99
999999999999
999999999999
          99
          99
99        99
999999999999
 9999999999
```

**********

EXTERNAL SYMBOL DICTIONARY

| SYMBOL | TYPE | ID | ADDR | LENGTH | LD ID |
|---|---|---|---|---|---|
| NESTEDLP | SD | 01 | 000000 | 000190 | |

```
 LOC  OBJECT CODE    ADDR1 ADDR2  STMT   SOURCE STATEMENT                                                F08APR70   9/16/70

000000                                1 NESTEDLP CSECT                                                          00000100
                                      2          COPY  MHMBEGIN                                                 00000200
000000                                3 R0       EQU   0                                                        00000700
000001                                4 R1       EQU   1                                                        00000800
000002                                5 R2       EQU   2                                                        00000900
000003                                6 R3       EQU   3                                                        00001000
000004                                7 R4       EQU   4                                                        00001100
000005                                8 R5       EQU   5                                                        00001200
000006                                9 R6       EQU   6                                                        00001300
000007                               10 R7       EQU   7                                                        00001400
000008                               11 R8       EQU   8                                                        00001500
000009                               12 R9       EQU   9                                                        00001600
00000A                               13 R10      EQU   10                                                       00001700
00000B                               14 R11      EQU   11                                                       00001800
00000C                               15 R12      EQU   12                                                       00001900
00000D                               16 R13      EQU   13                                                       00002000
00000E                               17 R14      EQU   14                                                       00002100
00000F                               18 R15      EQU   15                                                       00002200
000000 90EC D00C            0000C    19          STM   R14,R12,12(R13)     SAVE THE CALLER'S REGISTERS          00002400
000004 05C0                          20          BALR  R12,0               ESTABLISH PROGRAM BASE               00002500
000006                               21          USING *,R12               LET THE ASSEMBLER KNOW.              00002600
000006 41F0 C132            00138    22          LA    R15,SAVEAREA        ADDRESS OF MY SAVE AREA              00002700
00000A 50FD 0008            00008    23          ST    R15,8(R13)          BACKWARD CHAIN                       00002800
00000E 50DF 0004            00004    24          ST    R13,4(R15)          FORWARD CHAIN                        00002900
000012 18DF                          25          LR    R13,R15             ESTABLISH MY SAVE AREA               00003000
000014 D703 D008 D008 00008 00008    26          XC    8(4,R13),8(R13)     TERMINATE THE FORWARD CHAIN          00003100
                                     27 *        END OF STANDARD ENTRY LINKAGE CONVENTIONS.                       00003200
```

```
LOC  OBJECT CODE    ADDR1 ADDR2  STMT   SOURCE STATEMENT                                    F08APR70   9/16/70
                                  29 *                                 ******************************      00000400
                                  30 *                                 * NESTED LOOP SAMPLE PROGRAM. *      00000500
                                  31 *                                 * ------ ---- ------ -------- *      00000600
                                  32 *                                 ******************************      00000700


                                  34 *+++++++++++++++++++++++++++++++++++++++++++++++++++++++++++++++++++ 00000900
                                  35 *                                                                     00001000
                                  36 *        THIS PROGRAM IS DESIGNED TO COMPUTE THE TOTAL GROSS SALES IN  00001100
                                  37 *        AN OFFICE WHICH HAS FIVE SALES MANAGERS. EACH SALES MANAGER   00001200
                                  38 *        HAS FIVE SALESMEN WORKING IN HIS TERRITORY.                   00001300
                                  39 *                                                                     00001400
                                  40 *        THE PROGRAM SUMS THE SALES FOR EACH SALES MANAGER AND FOR THE 00001500
                                  41 *        ENTIRE OFFICE AT THE SAME TIME.                               00001600
                                  42 *                                                                     00001700
                                  43 *        THIS IS DONE BY USING TWO LOOPS 'NESTED' WITHIN EACH OTHER.   00001800
                                  44 *        THE OUTERMOST LOOP STEPS THE PROGRAM FROM ONE SALES MANAGER   00001900
                                  45 *        TO THE NEXT, WHILE THE INNERMOST LOOP CONTROLS THE ADDITION   00002000
                                  46 *        OF THE SALES OF EACH SALESMAN IN THE MANAGER'S TERRITORY.     00002100
                                  47 *                                                                     00002200
                                  48 *        THE DATA EXISTS IN A TABLE THAT LOOKS LIKE THIS:              00002300
                                  49 *+++++++++++++++++++++++++++++++++++++++++++++++++++++++++++++++++++ 00002400


                                  51 *..................................................................... 00002600
                                  52 *                                                                     00002700
                                  53 *        EACH BLOCK IN THE TABLE REPRESENTS AN 8-BYTE NUMBER WHICH     00002800
                                  54 *        CONTAINS THE GROSS SALES FOR EACH INDIVIDUAL SALESMAN. (THE   00002900
                                  55 *        NUMBERS ARE IN PACKED DECIMAL FORMAT.)                        00003000
                                  56 *                                                                     00003100
                                  57 *        EACH SALESMAN IS IDENTIFIED BY TWO NUMBERS, SEPARATED BY      00003200
                                  58 *        A COMMA, THE FIRST IS THE NUMBER OF THE MANAGER               00003300
                                  59 *        FOR WHOM THE SALESMAN WORKS, AND THE SECOND NUMBER IS THE     00003400
                                  60 *        SALESMAN'S NUMBER IN HIS MANAGER'S TERRITORY.                 00003500
                                  61 *                                                                     00003600
                                  62 *        | TOTALS     |   GROSS SALES BY SALESMAN NUMBER      |       00003700
                                  63 *        +-----------+-------+-------+-------+-------+-------+       00003800
                                  64 *        | MANAGER 1 | (1,1) | (1,2) | (1,3) | (1,4) | (1,5) |       00003900
                                  65 *        +-----------+-------+-------+-------+-------+-------¬       00004000
                                  66 *        | MANAGER 2 | (2,1) | (2,2) | (2,3) | (2,4) | (2,5) |       00004100
                                  67 *        +-----------+-------+-------+-------+-------+-------¬       00004200
                                  68 *        | MANAGER 3 | (3,1) | (3,2) | (3,3) | (3,4) | (3,5) |       00004300
                                  69 *        +-----------+-------+-------+-------+-------+-------¬       00004400
                                  70 *        | MANAGER 4 | (4,1) | (4,2) | (4,3) | (4,4) | (4,5) |       00004500
                                  71 *        +-----------+-------+-------+-------+-------+-------¬       00004600
                                  72 *        | MANAGER 5 | (5,1) | (5,2) | (5,3) | (5,4) | (5,5) |       00004700
                                  73 *        +-----------+-------+-------+-------+-------+-------+       00004800
                                  74 *        | OFFICE    |                                             00004900
                                  75 *        +-----------+                                             00005000
                                  76 *                                                                     00005100
                                  77 *..................................................................... 00005200
```

```
                                 *****A2*********
 ****A1********                  *               *
*              *                 * HOUSEKEEPING  *
*     BEGIN    * -------->       * AND REGISTER  *
*              *                 *INITIALIZATION.*
 **************                  *               *
                                 ****************
                                         |
                                         |
                                         |
                                         V
                          SUMLOOP
   **B1******             *****B2*********
  *          *            *               *
 *POINT TO NEXT*          *ADD A SALESMANS*
*   SALESMAN   * -------->* TOTAL TO HIS  *
 *            *           *MANAGERS TOTAL.*
  *          *            *               *
   **********             ****************
        A                        |
        |                        |
        |                        |
        |                        V
        |                       .*.
        |                     C2   *.
        |                   .* LAST  *.
        |                NO .* SALESMAN  *.
        |<---------------  *.  FOR THIS   .*
        |                   *.MANAGER ?.*
        |                     *.      .*
        |                       *. .*
        |                        * YES
        |                        |
        |                        |
        |                        |
        |                        V
        |                 *****D2*********
        |                 * ADD MANAGERS  *
        |                 *TOTAL TO OFFICE*
        |                 *TOTAL AND POINT*
        |                 *TO NEXT MANAGER*
        |                 *               *
        |                 ****************
        |                        |
        |                        |
        |                        |
        |                        V
        |                       .*.
        |                     E2   *.
        |                   .* LAST  *.                 ****E3********
        |                NO .*MANAGER FOR*. YES        *             *
        +---------------  *.THE OFFICE ? .* -------->*    RETURN.    *
                           *.      .*                 *             *
                             *. .*                     **************
                               *
```

```
       NESTED LOOP SAMPLE......GROSS SALES PROGRAM.                                                            PAGE    4

  LOC  OBJECT CODE    ADDR1 ADDR2  STMT   SOURCE STATEMENT                                               F08APR70   9/16/70

00001A 9836 C17A            00180    94            LM     3,6,=A(TOTMGR01+40,8,TOTMGR01,5) INITIALIZE REGISTERS    00006900
00001E 1344                          95            LCR    4,4                                                     00007000
000020 FA77 5000 3000 00000 00000    96 SUMLOOP    AP     0(8,5),0(8,3)       ADD A SALESMAN'S TOTAL TO MANAGER'S  00007100
000026 8634 C01A            00020    97            BXH    3,4,SUMLOOP         REPEAT FOR ALL THIS MANAGER'S MEN.   00007200
00002A FA77 C12A 5000 00130 00000    98            AP     TOTOFFIC,0(8,5)     ADD THE MANAGER'S TOTAL TO THE OFFICE 00007300
000030 4155 0030            00030    99            LA     5,48(5)             POINT TO NEXT MANAGER                00007400
000034 4133 0058            00058   100            LA     3,88(3)             POINT TO HIS LAST SALESMAN.          00007500
000038 4660 C01A            00020   101            BCT    6,SUMLOOP           LOOP UNTIL ALL MANAGER'S ARE DONE.   00007600
00003C 0000                         102            DC     H'0'                GET A DUMP TO CHECK THE ANSWERS.     00007700


                                    104 *&&&&&&&&&&&&&&&&&&&&&&&&&&&&&&&&&&&&&&&&&&&&&&&&&&&&&&&&&&&&&&&&&&&&&& 00007900
                                    105 *                                                                       00008000
                                    106 *        ANSWER THE FOLLOWING QUESTIONS ABOUT THIS CODING ROUTINE.      00008100
                                    107 *                                                                       00008200
                                    108 *        1. HOW MANY TIMES WILL THE 'AP' INSTRUCTION AT 'SUMLOOP' BE    00008300
                                    109 *           EXECUTED ?                                                  00008400
                                    110 *                                                                       00008500
                                    111 *        2. HOW MANY TIMES WILL THE OTHER 'AP' INSTRUCTION BE           00008600
                                    112 *           EXECUTED ??                                                 00008700
                                    113 *                                                                       00008800
                                    114 *        3. WHICH INSTRUCTION CONTROLS THE NUMBER OF TIMES:             00008900
                                    115 *                  A) THE INNER LOOP IS EXECUTED ?                      00009000
                                    116 *                  B) THE OUTER LOOP IS EXECUTED ?                      00009100
                                    117 *                                                                       00009200
                                    118 *&&&&&&&&&&&&&&&&&&&&&&&&&&&&&&&&&&&&&&&&&&&&&&&&&&&&&&&&&&&&&&&&&&&&&& 00009300
```

```
LOC   OBJECT CODE     ADDR1 ADDR2  STMT   SOURCE STATEMENT                                                F08APR70   9/16/70
                                   120 *.......................................................................  00009500
                                   121 *                                                                        00009600
                                   122 ***ANSWERS....                                                           00009700
                                   123 *                                                                        00009800
                                   124 *        1. 25 TIMES, ONCE PER SALESMAN (5) PER MANAGER (5). 5 X 5 = 25  00009900
                                   125 *                                                                        00010000
                                   126 *        2. 5 TIMES, ONCE PER MANAGER (5).                               00010100
                                   127 *                                                                        00010200
                                   128 *        3. A) ' BXH   3,4,SUMLOOP '                                     00010300
                                   129 *           B) ' BCT   6,SUMLOOP   '                                     00010400
                                   130 *                                                                        00010500
                                   131 *.......................................................................  00010600


                                   133 *                                                                        00010800
                                   134 *        THESE CONSTANTS REPRESENT THE TOTAL GROSS SALES OF THE 25       00010900
                                   135 *        SALESMEN DESCRIBED IN THE PROLOGUE TO THIS CODING SAMPLE.       00011000
                                   136 *                                                                        00011100
000040                             137          DS    0D                  ALIGN FOR READABILITY'S SAKE.         00011200
000040 000000000000000C            138 TOTMGR01 DC    PL8'0'              TOTAL FOR MANAGER NUMBER 1.           00011300
                                   139 *        THESE ARE SALESMEN 1 TO 5 FOR MANAGER NUMBER 1.                 00011400
000048 000000001127403C            140          DC    PL8'11274.03,10163.19,6441.78,9437.62,26619.18'         00011500
                                   141 *                                                                        00011600
000070 000000000000000C            142 TOTMGR02 DC    PL8'0'              TOTAL SALES FOR MANAGER NUMBER 2      00011700
                                   143 *        THESE ARE SALESMEN 1 TO 5 FOR MANAGER NUMBER 2.                 00011800
000078 000000000264833C            144          DC    PL8'2648.33,9177.54,6122.10,7543.71,5596.44'            00011900
                                   145 *                                                                        00012000
0000A0 000000000000000C            146 TOTMGR03 DC    PL8'0'              GROSS SALES FOR MANAGER 3.            00012100
                                   147 *        THESE ARE SALESMEN 1 TO 5 FOR MANAGER NUMBER 3.                 00012200
0000A8 000000002346159C            148          DC    PL8'23461.59,17596.71,3377.48,6781.54,31766.53'         00012300
                                   149 *                                                                        00012400
0000D0 000000000000000C            150 TOTMGR04 DC    PL8'0'              TOTAL GROSS SALES FOR MANAGER 4.      00012500
                                   151 *        THESE ARE SALESMEN 1 TO 5 FOR MANAGER NUMBER 4.                 00012600
0000D8 000000001967736C            152          DC    PL8'19677.36,8871.59,9433.17,5761.08,11989.67'          00012700
                                   153 *                                                                        00012800
000100 000000000000000C            154 TOTMGR05 DC    PL8'0'              TOTAL SALES FOR TERRITORY 5.          00012900
                                   155 *        THESE ARE SALESMEN 1 TO 5 FOR MANAGER NUMBER 5.                 00013000
000108 000000000551563C            156          DC    PL8'5515.63,2292.62,7360.72,12357.11,14145.92'          00013100
                                   157 *                                                                        00013200
000130 000000000000000C            158 TOTOFFIC DC    PL8'0'              TOTAL GROSS SALES FOR THE OFFICE.     00013300
000138                             159 SAVEAREA DS    18F                                                      00013400
                                   160          END                                                            00013500
000180 0000006800000008            161                =A(TOTMGR01+40,8,TOTMGR01,5)
```

9/16/70

| POS.ID | REL.ID | FLAGS | ADDRESS |
|---|---|---|---|
| 01 | 01 | 0C | 000180 |
| 01 | 01 | 0C | 000188 |

9/16/70

```
SYMBOL    LEN  VALUE  DEFN     REFERENCES

NESTEDLP 00001 000000 00001
R0       00001 000000 00003
R1       00001 000001 00004
R10      00001 00000A 00013
R11      00001 00000B 00014
R12      00001 00000C 00015   0019  0020  0021
R13      00001 00000D 00016   0019  0023  0024  0025  0026  0026
R14      00001 00000E 00017   0019
R15      00001 00000F 00018   0022  0023  0024  0025
R2       00001 000002 00005
R3       00001 000003 00006
R4       00001 000004 00007
R5       00001 000005 00008
R6       00001 000006 00009
R7       00001 000007 00010
R8       00001 000008 00011
R9       00001 000009 00012
SAVEAREA 00004 000138 00159   0022
SUMLOOP  00006 000020 00096   0097  0101
TOTMGR01 00008 000040 00138   0094  0094  0161  0161
TOTMGR02 00008 000070 00142
TOTMGR03 00008 0000A0 00146
TOTMGR04 00008 0000D0 00150
TOTMGR05 00008 000100 00154
TOTOFFIC 00008 000130 00158   0098
```



```
NO STATEMENTS FLAGGED IN THIS ASSEMBLY
*STATISTICS*     SOURCE RECORDS (SYSIN) =   135      SOURCE RECORDS (SYSLIB) =    25
*OPTIONS IN EFFECT*   LIST, NODECK, LOAD, NORENT, XREF, NOTEST, ALGN, OS, LINECNT =  55
  205 PRINTED LINES
```

```
 F44-LEVEL LINKAGE EDITOR OPTIONS SPECIFIED MAP,LET,LIST,NCAL
           VARIABLE OPTIONS USED -  SIZE=(45056,6144)-          DEFAULT OPTION(S) USED
IEW0000              ENTRY UTILITY


                                                   MODULE MAP


  CONTROL SECTION                          ENTRY

    NAME     ORIGIN  LENGTH                  NAME   LOCATION     NAME   LOCATION     NAME   LOCATION     NAME   LOCATION

  NESTEDLP       00     190
  UTILITY       190     5A0
                                           PRINT        1F2    PCHKRETN     44E

 ENTRY ADDRESS       190
 TOTAL LENGTH        730

****GO        DOES NOT EXIST BUT HAS BEEN ADDED TO DATA SET
```

```
F.P. REGS.  00.000000 0001C060   00.000001 00070AE4   00.0174A0 00070AE0   00.070EEC 00070C84

REGS 0-7     FFFFFF2E 0006BFF8 0001C57C 0005FA28    FFFFFFF8 0005FA00 00000000 00019598
REGS 8-15    0001C560 00000000 0001C588 00000000    6F05F8D6 0005FA08 0000C7D4 0005FA08

000000    00000000 00000000 00000000 00000000    0005F8D0 00000000 FF050C00 B007EA58  *.................8.............*
000020    00040003 50006A3E FFC50001 6F05F90E    0000FF00 00000000 FE040233 80000A1E  *.........E....9................*
000040    0006C498 0C000001 000014D0 00005920    083D5B00 0000996C 00040000 00007498  *..D............................*
000060    00040000 00007BC8 00040000 00007588    C0000000 00012D10 00040000 0000751A  *.......H......................*

05F8C0    D008D008 07FE0000 00000000 00000000    90ECD00C C5C041F0 C13250FD 000850DF  *......................0A.......*
05F8E0    000418DF D703D008 D0089836 C17A1344    FA775000 30008634 C01AFA77 C12A5000  *....P.......A................A...*
05F900    41550030 41330058 4660C01A 00004740    00000000 63935800 00000000 1127403C  *............... ............... .*
05F920    00000000 1016319C 00000000 0644178C    00000000 0943762C 00000000 2661918C  *................................*
05F940    00000000 3108812C 00000000 0264833C    00000000 0917754C 00000000 0612210C  *................................*
05F960    00000000 0754371C 00000000 0559644C    00000000 8298385C 00000000 2346159C  *................................*
05F980    00000000 1759671C 00000000 0337748C    00000000 0678154C 00000000 3176653C  *................................*
05F9A0    00000000 5573287C 00000000 1967736C    00000000 0887159C 00000000 0943317C  *................................*
05F9C0    00000000 0576108C 00000000 1198967C    00000000 4167200C 00000000 0551563C  *................................*
05F9E0    00000000 0229262C 00000000 0736072C    00000000 1235711C 00000000 1414592C  *................................*
05FA00    00000002 7541264C 47409416 0006BF68    00000000 541094FA 41110000 0A0A4100  *......... ......................*
05FA20    0118181D 541094FA 41110000 0A0AD203    C02494FE D203C028 94FE9104 70044710  *...............K.....K...........*
05FA40    945858F0 94DA920C C02705FF D203C024    0005F938 000C0008 0005F910 00000005  *...0........K.....9.......9.....*
05FA60    90ECD00C 05C004F0 07004110 C0100511    0F05FB04 7FFF0A0E 58B00010 9110B074  *.......C......................*

060020    4A009BDE 40050000 47F095C6 48609BEE    8A600001 4770969E 48609C26 41660001  *.... ....0.F..................*
```



**********

```
LL            OOOOOOOOOOOO  OOOOOOOOOOOO  PPPPPPPPPPP    SSSSSSSSSS                TTTTTTTTTTTT   AAAAAAAAAA
LL            OOOOOOOOOOOO  OOOOOOOOOOOO  PPPPPPPPPPPP  SSSSSSSSSSS                TTTTTTTTTTTT  AAAAAAAAAAAA
LL            OO        OO  OO        OO  PP        PP  SS        SS                     TT        AA        AA
LL            OO        OO  OO        OO  PP        PP  SS                               TT        AA        AA
LL            OO        OO  OO        OO  PP        PP  SSS                              TT        AA        AA
LL            OO        OO  OO        OO  PPPPPPPPPPPP   SSSSSSSSS                       TT        AAAAAAAAAAAA
LL            OO        OO  OO        OO  PPPPPPPPPPP     SSSSSSSSS                      TT        AAAAAAAAAAAA
LL            OO        OO  OO        OO  PP                     SSS                     TT        AA        AA
LL            OO        OO  OO        OO  PP                      SS                     TT        AA        AA
LL            OO        OO  OO        OO  PP             SS       SS                     TT        AA        AA
LLLLLLLLLLLL  OOOOOOOOOOOO  OOOOOOOOOOOO  PP             SSSSSSSSSSS                     TT        AA        AA
LLLLLLLLLLLL  OOOOOOOOOOOO  OOOOOOOOOOOO  PP              SSSSSSSSSS                     TT        AA        AA
```

```
 9999999999
999999999999
99        99
99        99
99        99
999999999999
999999999999
          99
          99
99        99
999999999999
 9999999999
```



**********

| SYMBOL | TYPE | ID | ADDR | LENGTH | LD ID |
|---|---|---|---|---|---|
| NESTEDTA | SD | 01 | 000000 | 000198 | |

```
  LOC  OBJECT CODE    ADDR1 ADDR2  STMT   SOURCE STATEMENT                                                F08APR70   9/16/70

000000                                1 NESTEDTA CSECT                                                          00000100
                                      2          COPY   MHMBEGIN                                                00000200
000000                                3 R0       EQU    0                                                       00000700
000001                                4 R1       EQU    1                                                       00000800
000002                                5 R2       EQU    2                                                       00000900
000003                                6 R3       EQU    3                                                       00001000
000004                                7 R4       EQU    4                                                       00001100
000005                                8 R5       EQU    5                                                       00001200
000006                                9 R6       EQU    6                                                       00001300
000007                               10 R7       EQU    7                                                       00001400
000008                               11 R8       EQU    8                                                       00001500
000009                               12 R9       EQU    9                                                       00001600
00000A                               13 R10      EQU    10                                                      00001700
00000B                               14 R11      EQU    11                                                      00001800
00000C                               15 R12      EQU    12                                                      00001900
00000D                               16 R13      EQU    13                                                      00002000
00000E                               17 R14      EQU    14                                                      00002100
00000F                               18 R15      EQU    15                                                      00002200
000000 90EC D00C            0000C    19          STM    R14,R12,12(R13)     SAVE THE CALLER'S REGISTERS         00002400
000004 05C0                          20          BALR   R12,0               ESTABLISH PROGRAM BASE              00002500
000006                               21          USING  *,R12               LET THE ASSEMBLER KNOW.             00002600
000006 41F0 C14A            0015C    22          LA     R15,SAVEAREA        ADDRESS OF MY SAVE AREA             00002700
00000A 50FD 0008            00008    23          ST     R15,8(R13)          BACKWARD CHAIN                      00002800
00000E 50DF 0004            00004    24          ST     R13,4(R15)          FORWARD CHAIN                       00002900
000012 18DF                          25          LR     R13,R15             ESTABLISH MY SAVE AREA              00003000
000014 D703 D008 D008 00008 00008    26          XC     8(4,R13),8(R13)     TERMINATE THE FORWARD CHAIN         00003100
                                     27 *        END OF STANDARD ENTRY LINKAGE CONVENTIONS.                     00003200
```

```
LOC  OBJECT CODE    ADDR1 ADDR2  STMT   SOURCE STATEMENT                                    F08APR70   9/16/70

                                  29 *                                 ************************************ 00000400
                                  30 *                                 * LOOPS TROUBLE ANALYSIS PROBLEM 1.* 00000500
                                  31 *                                 ************************************ 00000600


                                  33 ********************************************************************** 00000800
                                  34 *                                                                      00000900
                                  35 *        YOU HAVE SEEN THIS PROGRAM BEFORE, ALTHOUGH THE CODING HAS    00001000
                                  36 *        CHANGED. DOING SO SOMETIMES CAUSES PROBLEMS, SO, NATURALLY,   00001100
                                  37 *        THIS TIME THE PROGRAM DOES NOT WORK. YOU WILL HAVE TO         00001200
                                  38 *        ACSERTAIN THE EXTENT OF THE FAILURE FROM THE DUMP THAT IS     00001300
                                  39 *        SUPPLIED. ONCE YOU HAVE DETERMINED WHAT THE PROGRAM FAILED    00001400
                                  40 *        TO DO, FIND THE FAILING INSTRUCTION(S) OR INDICATE THE        00001500
                                  41 *        INSTRUCTION(S) THAT NEED TO BE ADDED TO MAKE THE PROGRAM      00001600
                                  42 *        WORK.                                                         00001700
                                  43 *                                                                      00001800
                                  44 ********************************************************************** 00001900


                                  46 ++++++++++++++++++++++++++++++++++++++++++++++++++++++++++++++++++++++ 00002100
                                  47 *                                                                      00002200
                                  48 *        THIS PROGRAM IS DESIGNED TO COMPUTE THE TOTAL GROSS SALES IN  00002300
                                  49 *        AN OFFICE WHICH HAS FIVE SALES MANAGERS. EACH SALES MANAGER   00002400
                                  50 *        HAS FIVE SALESMEN WORKING IN HIS TERRITORY.                   00002500
                                  51 *                                                                      00002600
                                  52 *        THE PROGRAM SUMS THE SALES FOR EACH SALES MANAGER AND FOR THE 00002700
                                  53 *        ENTIRE OFFICE AT THE SAME TIME.                               00002800
                                  54 *                                                                      00002900
                                  55 *        THIS IS DONE BY USING TWO LOOPS 'NESTED' WITHIN EACH OTHER.   00003000
                                  56 *        THE OUTERMOST LOOP STEPS THE PROGRAM FROM ONE SALES MANAGER   00003100
                                  57 *        TO THE NEXT, WHILE THE INNERMOST LOOP CONTROLS THE ADDITION   00003200
                                  58 *        OF THE SALES OF EACH SALESMAN IN THE MANAGER'S TERRITORY.     00003300
                                  59 *                                                                      00003400
                                  60 *        THE DATA EXISTS IN A TABLE THAT LOOKS LIKE THIS:              00003500
                                  61 *                                                                      00003600
                                  62 ++++++++++++++++++++++++++++++++++++++++++++++++++++++++++++++++++++++ 00003700
```

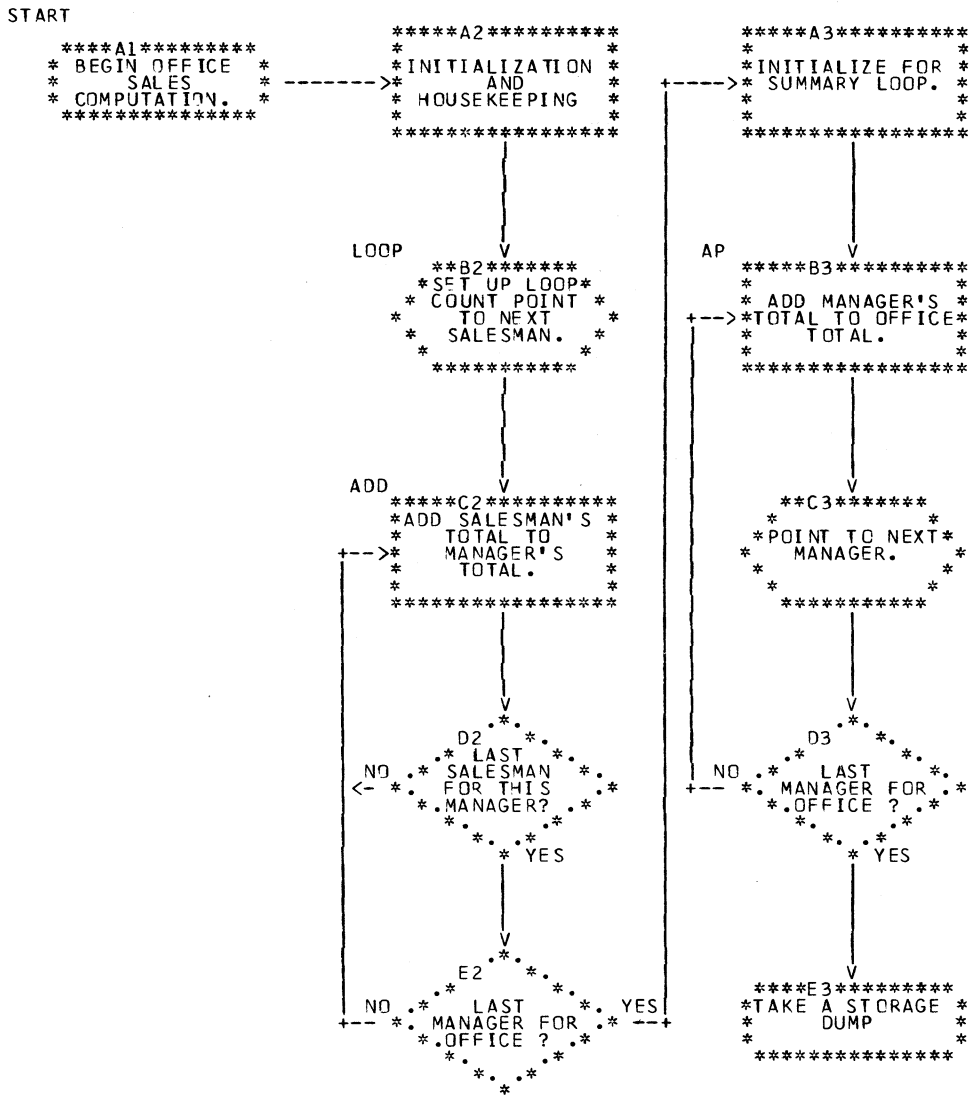
START
A1
BEGIN OFFICE SALES COMPUTATION.
A2
INITIALIZATION AND HOUSEKEEPING
LOOP
B2
SET UP LOOP COUNT POINT TO NEXT SALESMAN.
ADD
C2
ADD SALESMAN'S TOTAL TO MANAGER'S TOTAL.
D2
LAST SALESMAN FOR THIS MANAGER?
NO
YES
E2
LAST MANAGER FOR OFFICE ?
NO
YES
A3
INITIALIZE FOR SUMMARY LOOP.
AP
B3
ADD MANAGER'S TOTAL TO OFFICE TOTAL.
C3
POINT TO NEXT MANAGER.
D3
LAST MANAGER FOR OFFICE ?
NO
YES
E3
TAKE A STORAGE DUMP

```
LOC  OBJECT CODE     ADDR1 ADDR2  STMT   SOURCE STATEMENT                                    F08APR70   9/16/70

                                   64 *.......................................................... 00003900
                                   65 *                                                          00004000
                                   66 *        EACH BLOCK IN THE TABLE REPRESENTS AN 8-BYTE NUMBER WHICH   00004100
                                   67 *        CONTAINS THE GROSS SALES FOR EACH INDIVIDUAL SALESMAN. (THE 00004200
                                   68 *        NUMBERS ARE IN PACKED DECIMAL FORMAT.)                      00004300
                                   69 *                                                                    00004400
                                   70 *        EACH SALESMAN IS IDENTIFIED BY TWO NUMBERS, SEPARATED BY    00004500
                                   71 *        A COMMA, THE FIRST IS THE NUMBER OF THE MANAGER             00004600
                                   72 *        FOR WHOM THE SALESMAN WORKS, AND THE SECOND NUMBER IS THE   00004700
                                   73 *        SALESMAN'S NUMBER IN HIS MANAGER'S TERRITORY.               00004800
                                   74 *                                                                    00004900
                                   75 *        | TOTALS     |   GROSS SALES BY SALESMAN NUMBER      |     00005000
                                   76 *        +-----------+-------+-------+-------+-------+-------+      00005100
                                   77 *        | MANAGER 1 | (1,1) | (1,2) | (1,3) | (1,4) | (1,5) |      00005200
                                   78 *        +-----------+-------+-------+-------+-------+-------+      00005300
                                   79 *        | MANAGER 2 | (2,1) | (2,2) | (2,3) | (2,4) | (2,5) |      00005400
                                   80 *        +-----------+-------+-------+-------+-------+-------+      00005500
                                   81 *        | MANAGER 3 | (3,1) | (3,2) | (3,3) | (3,4) | (3,5) |      00005600
                                   82 *        +-----------+-------+-------+-------+-------+-------+      00005700
                                   83 *        | MANAGER 4 | (4,1) | (4,2) | (4,3) | (4,4) | (4,5) |      00005800
                                   84 *        +-----------+-------+-------+-------+-------+-------+      00005900
                                   85 *        | MANAGER 5 | (5,1) | (5,2) | (5,3) | (5,4) | (5,5) |      00006000
                                   86 *        +-----------+-------+-------+-------+-------+-------+      00006100
                                   87 *        | OFFICE    |                                            00006200
                                   88 *        +-----------+                                            00006300
                                   89 *                                                                    00006400
                                   90 *.......................................................... 00006500

00001A 4170 0005            00005  92          LA    R7,5                INITIALIZE REGISTERS.          00006700
00001E 4180 C052            00058  93          LA    R8,TOTMGR01         POINT TO FIRST MANAGER.        00006800
000022 1868                        94 LOOP      LR    R6,R8               INITIALIZE OUTER LOOP.         00006900
000024 4166 0008            00008  95          LA    R6,8(R6)            POINT TO FIRST SALESMAN FOR MGR. 00007000
000028 FA77 8000 6000 00000 00000  96 ADD       AP    0(8,R8),0(8,R6)     ADD A SALESMAN'S TOTAL TO MANAGER'S 00007100
00002E 4166 0008            00008  97          LA    R6,8(R6)            POINT TO NEXT SALESMAN.        00007200
000032 465C C022            00028  98          BCT   R5,ADD              REPEAT FOR ALL SALESMEN.       00007300
000036 4188 0030            00030  99          LA    R8,48(R8)           POINT TO NEXT MANAGER.         00007400
00003A 4670 C01C            00022 100          BCT   R7,LOOP             REPEAT FOR ALL MANAGERS.       00007500
00003E 4170 0005            00005 101          LA    R7,5                INITIALIZE FOR SUMMARY LOOP.   00007600
000042 4160 C052            00058 102          LA    R6,TOTMGR01         POINT TO FIRST MANAGER.        00007700
000046 FA77 8000 6000 00000 00000 103 AP        AP    0(8,R8),0(8,R6)     ADD TOTAL TO OFFICE TOTAL.     00007800
00004C 4166 0030            00030 104          LA    R6,48(R6)         POINT TO NEXT MANAGER.           00007900
000050 4670 C040            00046 105          BCT   R7,AP             REPEAT FOR ALL MANAGERS.         00008000
000054 0000                       106          DC    H'C0'             TAKE A DUMP TO SEE ANSWERS.      00008100
```

```
 LOC  OBJECT CODE    ADDR1 ADDR2  STMT   SOURCE STATEMENT                                          F08APR70   9/16/70

                                  122 *                                                                          00009700
                                  123 *         THESE CONSTANTS REPRESENT THE TOTAL GROSS SALES OF THE 25        00009800
                                  124 *         SALESMEN DESCRIBED IN THE PROLOGUE TO THIS CODING SAMPLE.        00009900
                                  125 *                                                                          00010000
000058                            126           DS    0D                  ALIGN FOR READABILITY'S SAKE.          00010100
000058 000000000000000C           127 TOTMGR01  DC    PL8'0'              TOTAL FOR MANAGER NUMBER 1.            00010200
                                  128 *         THESE ARE SALESMEN 1 TO 5 FOR MANAGER NUMBER 1.                  00010300
000060 000000001127403C           129           DC    PL8'11274.03,10163.19,6441.78,9437.62,26619.18'          00010400
                                  130 *                                                                          00010500
000088 000000000000000C           131 TOTMGR02  DC    PL8'0'              TOTAL SALES FOR MANAGER NUMBER 2       00010600
                                  132 *         THESE ARE SALESMEN 1 TO 5 FOR MANAGER NUMBER 2.                  00010700
000090 000000000264833C           133           DC    PL8'2648.33,9177.54,6122.10,7543.71,5596.44'             00010800
                                  134 *                                                                          00010900
000B8 000000000000000C            135 TOTMGR03  DC    PL8'0'              GROSS SALES FOR MANAGER 3.             00011000
                                  136 *         THESE ARE SALESMEN 1 TO 5 FOR MANAGER NUMBER 3.                  00011100
000C0 000000002346159C            137           DC    PL8'23461.59,17596.71,3377.48,6781.54,31766.53'          00011200
                                  138 *                                                                          00011300
000E8 000000000000000C            139 TOTMGR04  DC    PL8'0'              TOTAL GROSS SALES FOR MANAGER 4.       00011400
                                  140 *         THESE ARE SALESMEN 1 TO 5 FOR MANAGER NUMBER 4.                  00011500
000F0 000000001967736C            141           DC    PL8'19677.36,8871.59,9433.17,5761.08,11989.67'           00011600
                                  142 *                                                                          00011700
000118 000000000000000C           143 TOTMGR05  DC    PL8'0'              TOTAL SALES FOR TERRITORY 5.           00011800
                                  144 *         THESE ARE SALESMEN 1 TO 5 FOR MANAGER NUMBER 5.                  00011900
000120 000000000551563C           145           DC    PL8'5515.63,2292.62,7360.72,12357.11,14145.92'           00012000
                                  146 *                                                                          00012100
000148 000000000000000C           147 TOTOFFIC  DC    PL8'0'              TOTAL GROSS SALES FOR THE OFFICE.      00012200
000150                            148 SAVEAREA  DS    18F                                                        00012300
                                  149           END                                                              00012400
```

9/16/70

| SYMBOL | LEN | VALUE | DEFN | REFERENCES | | | | | | | | | |
|---|---|---|---|---|---|---|---|---|---|---|---|---|---|
| ADD | 00006 | 000028 | 00096 | 0098 | | | | | | | | | |
| AP | 00006 | 000046 | 00103 | 0105 | | | | | | | | | |
| LOOP | 00002 | 000022 | 00094 | 0100 | | | | | | | | | |
| NESTEDTA | 00001 | 000000 | 00001 | | | | | | | | | | |
| R0 | 00001 | 000000 | 00003 | | | | | | | | | | |
| R1 | 00001 | 000001 | 00004 | | | | | | | | | | |
| R10 | 00001 | 00000A | 00013 | | | | | | | | | | |
| R11 | 00001 | 00000B | 00014 | | | | | | | | | | |
| R12 | 00001 | 00000C | 00015 | 0019 | 0020 | 0021 | | | | | | | |
| R13 | 00001 | 00000D | 00016 | 0019 | 0023 | 0024 | 0025 | 0026 | 0026 | | | | |
| R14 | 00001 | 00000E | 00017 | 0019 | | | | | | | | | |
| R15 | 00001 | 00000F | 00018 | 0022 | 0023 | 0024 | 0025 | | | | | | |
| R2 | 00001 | 000002 | 00005 | | | | | | | | | | |
| R3 | 00001 | 000003 | 00006 | | | | | | | | | | |
| R4 | 00001 | 000004 | 00007 | | | | | | | | | | |
| R5 | 00001 | 000005 | 00008 | 0098 | | | | | | | | | |
| R6 | 00001 | 000006 | 00009 | 0094 | 0095 | 0095 | 0096 | 0097 | 0097 | 0102 | 0103 | 0104 | 0104 |
| R7 | 00001 | 000007 | 00010 | 0092 | 0100 | 0101 | 0105 | | | | | | |
| R8 | 00001 | 000008 | 00011 | 0093 | 0094 | 0096 | 0099 | 0099 | 0103 | | | | |
| R9 | 00001 | 000009 | 00012 | | | | | | | | | | |
| SAVEAREA | 00004 | 000150 | 00148 | 0022 | | | | | | | | | |
| TOTMGR01 | 00008 | 000058 | 00127 | 0093 | 0102 | | | | | | | | |
| TOTMGR02 | 00008 | 000088 | 00131 | | | | | | | | | | |
| TOTMGR03 | 00008 | 0000B8 | 00135 | | | | | | | | | | |
| TOTMGR04 | 00008 | 0000E8 | 00139 | | | | | | | | | | |
| TOTMGR05 | 00008 | 000118 | 00143 | | | | | | | | | | |
| TOTOFFIC | 00008 | 000148 | 00147 | | | | | | | | | | |

NO STATEMENTS FLAGGED IN THIS ASSEMBLY
*STATISTICS* SOURCE RECORDS (SYSIN) = 124 SOURCE RECORDS (SYSLIB) = 25
*OPTIONS IN EFFECT* LIST, NODECK, LOAD, NORENT, XREF, NOTEST, ALGN, OS, LINECNT = 55
192 PRINTED LINES

```
F44-LEVEL LINKAGE EDITOR OPTIONS SPECIFIED MAP,LET,LIST,NCAL
          VARIABLE OPTIONS USED -  SIZE=(45056,6144)-          DEFAULT OPTION(S) USED
IEW0000             ENTRY UTILITY

                                                MODULE MAP

 CONTROL SECTION                        ENTRY

   NAME     ORIGIN  LENGTH                NAME   LOCATION     NAME   LOCATION     NAME   LOCATION     NAME   LOCATION

 NESTEDTA       00     198
 UTILITY       198     5A0
                                        PRINT        1FA    PCHKRETN     456

 ENTRY ADDRESS       198
 TOTAL LENGTH        738

****GO        DOES NOT EXIST BUT HAS BEEN ADDED TO DATA SET
```

```
F.P. REGS.  00.00D000 4006A132   00.0171B8 00000000   00.01A268 00000000   00.000000 00017568

REGS 0-7     FFFFFF2E 000367F8 0001A53C 00000000    00015230 00015F7A 0002A218 00000005
REGS 8-15    0002A120 00000000 0001A548 00000000    6F02A0CE 0002A218 0000C7D4 0002A218

000000    00000000 00000000 00000000 00000000    0002A0C8 00000000 FF040080 A000A93C  *...................H............*
000020    00040003 50006A3E FFC50007 EF02A0F6    0000FF00 00000000 FE040130 80000A06  *.........E.....6................*
000040    00000000 20000000 A00014D0 00005920    02C036A4 0000996C 00040000 00007498  *................................*
000060    00040000 00007BC8 00040000 00007588    00000000 00012D10 00040000 0000751A  *.......H........................*

02A0C0    40CC07FE 9620412B 90ECD00C 05C041F0    C14A50FD 000850DF 000418DF D703D008  * ..............0A...........P...*
02A0E0    D0084170 00054180 C0521868 41660008    FA778000 60004166 00084650 C0224188  *................................*
02A100    00304670 C01C4170 00054160 C052FA77    80006000 41660030 4670C040 0000600C  *.......................... ....*
02A120    00000002 7541264C 00000000 1127403C    C0000000 1016319C 00000000 0644178C  *............. ...............*
02A140    00000000 0943762C 00000000 2661918C    00000000 0000000C 00000000 0264833C  *................................*
02A160    00000000 0917754C 00000000 0612210C    00000000 0754371C 00000000 0559644C  *................................*
02A180    00000000 0000000C 00000000 2346159C    00000000 1759671C 00000000 0337748C  *................................*
02A1A0    00000000 0678154C 00000000 3176653C    00000000 0000000C 00000000 1967736C  *................................*
02A1C0    00000000 0887159C 00000000 0943317C    00000000 0576108C 00000000 1198967C  *................................*
02A1E0    00000000 0000000C 00000000 0551563C    00000000 0229262C 00000000 0736072C  *................................*
02A200    00000000 1235711C 00000000 1414592C    00000000 0000000C 0118181D 00036768  *................................*
02A220    00000000 0A0AD203 C02494FE D203C028    94FE9104 7C044710 945858F0 94DA920C  *......K......K...............0....*
02A240    C027C5EF D203C024 94FE910C 80564740    946AD503 701494FE 4780947C 58F094DE  *....K.......... ..N..........0..*
02A260    90ECD00C 05C004F0 07004110 C0100511    0F02A304 7FFF0A0E 58B00010 9110B074  *.......0........................*

02A820    4A009BDE 40050000 47F095C6 48609BEE    8A600001 4770969E 48609C26 41660001  *.... ....0.F....................*
```

( 2A218
& 2A120



**********

```
 SSSSSSSSSS   TTTTTTTTTTTT  OOOOOOOOOOOO  RRRRRRRRRRR    AAAAAAAAAA    GGGGGGGGGG   EEEEEEEEEEEE
SSSSSSSSSSS   TTTTTTTTTTTT  OOOOOOOOOOOO  RRRRRRRRRRRR  AAAAAAAAAAAA  GGGGGGGGGGGG  EEEEEEEEEEEE
SS        SS       TT      OO        OO  RR        RR  AA        AA  GG        GG  EE
SS                 TT      OO        OO  RR        RR  AA        AA  GG            EE
SSS                TT      OO        OO  RR        RR  AA        AA  GG            EE
 SSSSSSSSS         TT      OO        OO  RRRRRRRRRRRR  AAAAAAAAAAAA  GG            EEEEEEEE
  SSSSSSSSS        TT      OO        OO  RRRRRRRRRRRR  AAAAAAAAAAAA  GG     GGGGG  EEEEEEEE
         SSS       TT      OO        OO  RR    RR      AA        AA  GG     GGGGG  EE
          SS       TT      OO        OO  RR     RR     AA        AA  GG        GG  EE
SS        SS       TT      OO        OO  RR      RR    AA        AA  GG        GG  EE
SSSSSSSSSSS        TT      OOOOOOOOOOOO  RR       RR   AA        AA  GGGGGGGGGGGG  EEEEEEEEEEEE
 SSSSSSSSSS        TT      OOOOOOOOOOOO  RR        RR  AA        AA   GGGGGGGGGG   EEEEEEEEEEEE
```

```
 9999999999
999999999999
99        99
99        99
99        99
999999999999
999999999999
          99
          99
99        99
999999999999
 9999999999
```



**********

EXTERNAL SYMBOL DICTIONARY

| SYMBOL | TYPE | ID | ADDR | LENGTH | LD ID |
|---|---|---|---|---|---|
| STORAGE | SD | 01 | 000000 | 00079E | |
| PCHKRETN | ER | 02 | | | |

```
  LOC  OBJECT CODE    ADDR1 ADDR2  STMT   SOURCE STATEMENT                                          F08APR70   9/16/70

000000                                2 STORAGE  CSECT                                                          00000200
                                      3          COPY   MHMBEGIN                                                00000300
000000                                4 R0       EQU    0                                                       00000700
000001                                5 R1       EQU    1                                                       00000800
000002                                6 R2       EQU    2                                                       00000900
000003                                7 R3       EQU    3                                                       00001000
000004                                8 R4       EQU    4                                                       00001100
000005                                9 R5       EQU    5                                                       00001200
000006                               10 R6       EQU    6                                                       00001300
000007                               11 R7       EQU    7                                                       00001400
000008                               12 R8       EQU    8                                                       00001500
000009                               13 R9       EQU    9                                                       00001600
00000A                               14 R10      EQU    10                                                      00001700
00000B                               15 R11      EQU    11                                                      00001800
00000C                               16 R12      EQU    12                                                      00001900
00000D                               17 R13      EQU    13                                                      00002000
00000E                               18 R14      EQU    14                                                      00002100
00000F                               19 R15      EQU    15                                                      00002200
000000 90EC D00C            0000C    20          STM    R14,R12,12(R13)     SAVE THE CALLER'S REGISTERS         00002400
000004 05C0                          21          BALR   R12,0               ESTABLISH PROGRAM BASE              00002500
000006                               22          USING  *,R12               LET THE ASSEMBLER KNOW.             00002600
000006 41F0 C73E            00744    23          LA     R15,SAVEAREA        ADDRESS OF MY SAVE AREA             00002700
00000A 50FD 0008            00008    24          ST     R15,8(R13)          BACKWARD CHAIN                      00002800
00000E 50DF 0004            00004    25          ST     R13,4(R15)          FORWARD CHAIN                       00002900
000012 18DF                          26          LR     R13,R15             ESTABLISH MY SAVE AREA              00003000
000014 D703 D008 D008 00008 00008    27          XC     8(4,R13),8(R13)     TERMINATE THE FORWARD CHAIN         00003100
                                     28 *        END OF STANDARD ENTRY LINKAGE CONVENTIONS.                     00003200
                                     29          PRINT OFF                                                      00000400
```

```
LOC  OBJECT CODE    ADDR1 ADDR2  STMT   SOURCE STATEMENT                                             F08APR70   9/16/70
                                   36 *                        ********************************************   00001100
                                   37 *                        * DATA STORAGE AND RETRIEVAL STUDY PROJECT *   00001200
                                   38 *                        * ---- ------- --- --------- ----- ------- *   00001300
                                   39 *                        ********************************************   00001400



                                   41 *++++++++++++++++++++++++++++++++++++++++++++++++++++++++++++++++++++++ 00001600
                                   42 *                                                                       00001700
                                   43 *        THIS PROJECT CONTAINS DIAGRAMS AND CODE SAMPLES ILLUSTRATING   00001800
                                   44 *        SOME OF THE MORE COMMON DATA STORAGE AND RETRIEVAL TECHNIQUES. 00001900
                                   45 *                                                                       00002000
                                   46 *        THESE SAMPLES ARE INTENDED TO BE STUDIED DURING THE WORK-SHOP  00002100
                                   47 *        SESSION FOR THE STORAGE AND RETRIEVAL TOPIC.                   00002200
                                   48 *                                                                       00002300
                                   49 *        EACH CODING SAMPLE WILL BE PRECEEDED BY A DIAGRAM DEPICTING    00002400
                                   50 *        THE FORMAT OF THE TABLE TO BE DISCUSSED AND MANIPULATED BY     00002500
                                   51 *        THE CODING SAMPLE. FOLLOWING EACH SAMPLE, THERE ARE SOME       00002600
                                   52 *        QUESTIONS CONCERNING THE CODE THAT WAS USED. THESE ARE         00002700
                                   53 *        TO BE ANSWERED IN THE TIME ALLOWED; THEN THE ANSWERS WILL      00002800
                                   54 *        BE DISCUSSED BY THE CLASS.                                     00002900
                                   55 *                                                                       00003000
                                   56 *++++++++++++++++++++++++++++++++++++++++++++++++++++++++++++++++++++++ 00003100
```

```
LOC  OBJECT CODE    ADDR1 ADDR2  STMT   SOURCE STATEMENT                                    F08APR70   9/16/70

                                  58 *                          ***************************                 00003300
                                  59 *                          * SERIALLY ORGANIZED DATA *                 00003400
                                  60 *                          * -------- --------- ---- *                 00003500
                                  61 *                          ***************************                 00003600


                                  63 *+++++++++++++++++++++++++++++++++++++++++++++++++++++++++++++++++++++ 00003800
                                  64 *                                                                      00003900
                                  65 *        THROUGHOUT THIS PROJECT, THE DATA WILL BE A 12-BYTE RECORD,   00004000
                                  66 *        CONTAINING A 6-BYTE MAN NUMBER ( WHICH IS USED AS THE         00004100
                                  67 *        ARGUMENT) AND A FUNCTION WHICH CONTAINS AN INDICATOR BYTE     00004200
                                  68 *        DESIGNATING DOMESTIC OR W.T.C. EMPLOYEE, A 2-BYTE AREA        00004300
                                  69 *        NUMBER, AND A 3-BYTE BRANCH OFFICE NUMBER. EVERY              00004400
                                  70 *        DATA ITEM LOOKS LIKE:                                         00004500
                                  71 *                                                                      00004600
                                  72 *        0                   6   7      9        12    (BYTES)         00004700
                                  73 *        +-------------------+---+------+--------+                   00004800
                                  74 *        | MAN NUMBER        |IND|AREA #| B. O. #|                   00004900
                                  75 *        +-------------------+---+------+--------+                   00005000
                                  76 *                                                                      00005100
                                  77 *        THE DATA ITEM IS DESCRIBED BY THIS DUMMY SECTION.             00005200
                                  78 *                                                                      00005300
000000                            79 DATAITEM DSECT                 DUMMY SECTION FOR MAN NUMBER DATA ITEM. 00005400
000000                            80 MANNUMBR DS    CL6              MAN NUMBER (ARGUMENT).                 00005500
000006                            81 FUNCTION DS    0CL6             FUNCTION PORTION OF DATA ITEM.         00005600
000006                            82 INDICATR DS    CL1               DOMESTIC / WORLD TRADE INDICATOR.     00005700
000007                            83 AREANMBR DS    CL2               AREA NUMBER                           00005800
000009                            84 BRANCH#  DS    CL3               BRANCH OFFICE NUMBER.                 00005900
00000C                            85 NEXTITEM DS    0C                                                      00006000
00000C                            86 ITEMLEN  EQU   NEXTITEM-DATAITEM   LENGTH OF A DATA ITEM.              00006100
                                  87 *                                                                      00006200
                                  88 *        THE DATA BEGINS AT LOCATION 'TABLE' AND TAKES UP AS MUCH      00006300
                                  89 *        CORE AS IS NECESSARY. THE NEXT AVAILABLE EMPTY SPOT           00006400
                                  90 *        IN THE TABLE IS POINTED TO BY THE FULL-WORD ADDRESS CALLED    00006500
                                  91 *        'POINTER'. THE VALUE TO BE SEARCHED FOR IS PLACED IN          00006600
                                  92 *        'SARGUMNT'.                                                   00006700
                                  93 *                                 'TABLE'                              00006800
                                  94 *        +--------+               +-------------------+                00006900
                                  95 *        |   ->---+---->+         |  DATA ITEM # 1    |                00007000
                                  96 *        +--------+     |         +-------------------+                00007100
                                  97 *        'POINTER'      |         |  DATA ITEM # 2    |                00007200
                                  98 *                       |         +-------------------+                00007300
                                  99 *                       |         )))))))))))))))))))))                00007400
                                 100 *                       |         (((((((((((((((((((((                00007500
                                 101 *                       |         +-------------------+                00007600
                                 102 *                       |         |  DATA ITEM # N    |                00007700
                                 103 *                       V         +-------------------+                00007800
                                 104 *        'SARGUMNT'     +-------->| 1ST UNUSED SPACE  |                00007900
                                 105 *        +---------+              +-------------------+                00008000
                                 106 *        | MAN NO.|               |                   |                00008100
                                 107 *        +---------+              +-------------------+                00008200
                                 108 *                                 |<---12 BYTES ----->|                00008300
                                 109 *                                                                      00008400
                                 110 *++++++++++++++++++++++++++++++++++++++++++++++++++++++++++++++++++++ 00008500
```

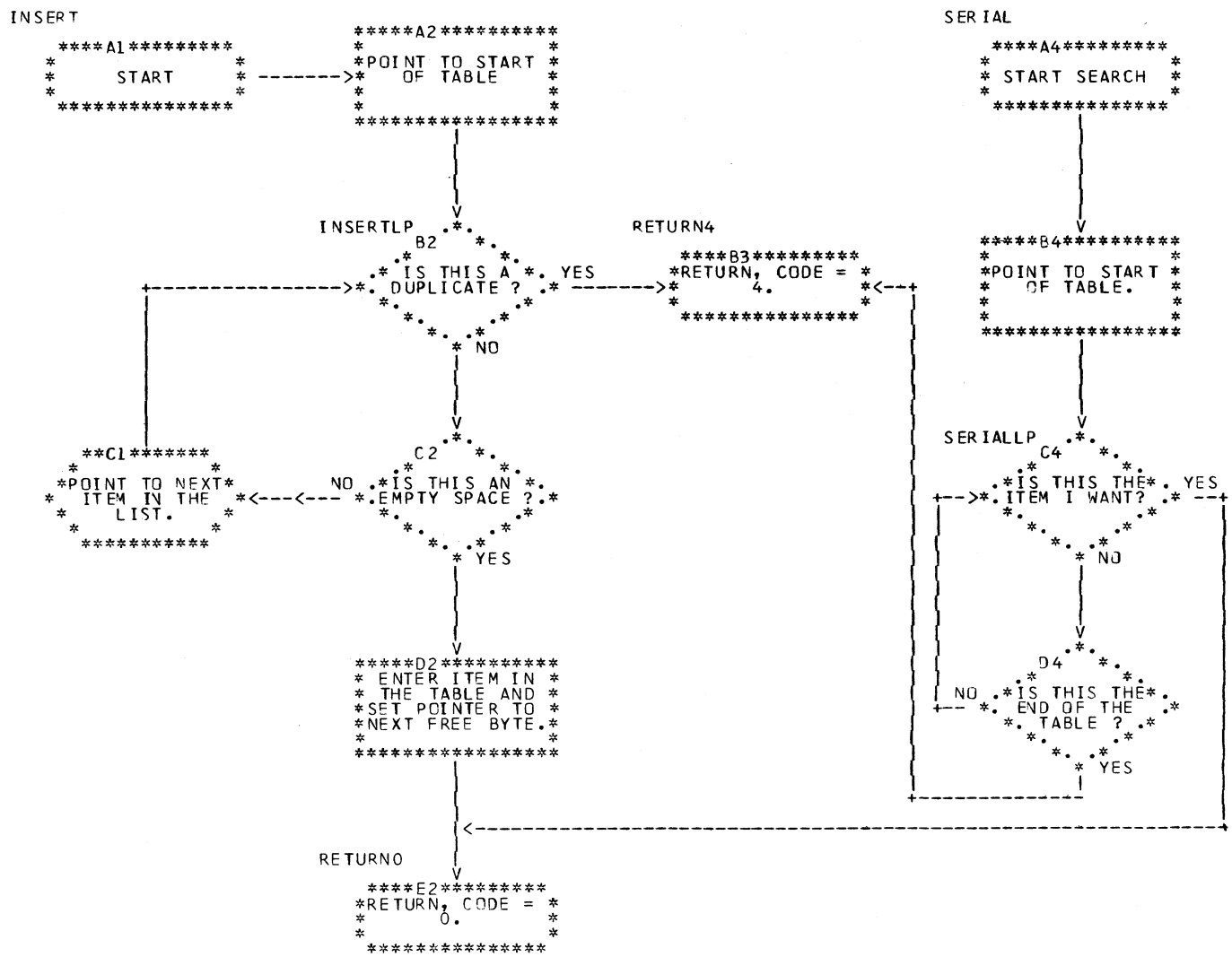
INSERT
A1
START
A2
POINT TO START OF TABLE
INSERTLP
B2
IS THIS A DUPLICATE ?
YES
NO
RETURN4
B3
RETURN, CODE = 4.
C1
POINT TO NEXT ITEM IN THE LIST.
NO
C2
IS THIS AN EMPTY SPACE ?
YES
D2
ENTER ITEM IN THE TABLE AND SET POINTER TO NEXT FREE BYTE.
RETURNO
E2
RETURN, CODE = 0.
SERIAL
A4
START SEARCH
B4
POINT TO START OF TABLE.
SERIALLP
C4
IS THIS THE ITEM I WANT?
YES
NO
D4
IS THIS THE END OF THE TABLE ?
NO
YES

```
LOC   OBJECT CODE    ADDR1 ADDR2  STMT   SOURCE STATEMENT                                          F08APR70   9/16/70

                                  129 ***********************************************************************  00010400
                                  130 *         IN ORDER TO ADD A NEW ITEM TO THE TABLE, WE PLACE IT'S        00010500
                                  131 *         ADDRESS IN REGISTER 1 AND BRANCH TO 'INSERT'. THIS WILL ADD AN 00010600
                                  132 *         ITEM TO THE TABLE IF IT IS NOT ALREADY IN. RETURN CODE = 4    00010700
                                  133 *         IF THE ITEM IS ALREADY IN THE TABLE; = 0 IF NOT ALREADY IN.   00010800
                                  134 *         BRANCHING TO 'SERIAL' SEARCHES FOR THE ITEM WHOSE NUMBER IS   00010900
                                  135 *         IN 'SARGUMNT'. A CODE OF 0 IS RETURNED IF THE ITEM CAN BE     00011000
                                  136 *         FOUND, A CODE OF 4 IS RETURNED IF IT CANNOT BE FOUND.         00011100
                                  137 ***********************************************************************  00011200


                                  139 *         RESTART THE CONTROL SECTION.                                  00011400
000000                            140 STORAGE   CSECT                                                         00011500
000000                            141           USING DATAITEM,R15                                            00011600
00002A 47F0 C078          0007E   142           B     TESTCODE            BRANCH AROUND ROUTINE               00011700


00002E 41F0 C0AA          000B0   144 INSERT    LA    R15,TABLE                                             00011900
000032 D505 F000 1000 00000 00000 145 INSERTLP  CLC   MANNUMBR,0(R1)      SEARCH FOR A DUPLICATE.             00012000
000038 4780 C054          0005A   146           BE    RETURN4             FOUND ONE, ERROR RETURN             00012100
00003C 41F0 F00C          0000C   147           LA    R15,NEXTITEM                                            00012200
000040 59F0 C122          00128   148           C     R15,POINTER         END OF USED TABLE SPACE ?           00012300
000044 4740 C02C          00032   149           BL    INSERTLP            NO, CONTINUE SEARCH.                00012400
000048 D20B F000 1000 00000 00000 150           MVC   DATAITEM(ITEMLEN),0(R1) YES, ENTER THE ITEM IN THE TABLE 00012500
00004E 41F0 F00C          0000C   151           LA    R15,NEXTITEM        POINT TO NTXT FREE SPACE.           00012600
000052 50F0 C122          00128   152           ST    R15,POINTER                                             00012700
000056 1BFF                       153 RETURNO   SR    R15,R15             NORMAL (CLEAN) RETURN.              00012800
000058 07FE                       154           BR    R14                                                     00012900
00005A 41F0 0004          00004   155 RETURN4   LA    R15,4               ERROR RETURN.                       00013000
00005E 07FE                       156           BR    R14                                                     00013100
                                  157           DROP  R15                                                     00013200


000000                            159           USING DATAITEM,R1                                             00013400
000060                            160 SERIAL    EQU   *                   THIS ROUTINE LOCATES AN ITEM IN THE 00013500
000060 4110 C0AA          000B0   161           LA    R1,TABLE            TABLE.                              00013600
000064 D505 1000 C132 00000 00138 162 SERIALLP  CLC   MANNUMBR,SARGUMNT   IS THIS THE ITEM ?                 00013700
00006A 4780 C050          00056   163           BE    RETURNO             FOUND, RETURN TO CALLER.            00013800
00006E 4110 100C          0000C   164           LA    R1,NEXTITEM                                             00013900
000072 5910 C122          00128   165           C     R1,POINTER          END OF THE USED TABLE SPACE ?       00014000
000076 4740 C05E          00064   166           BL    SERIALLP            NO, LOOP TO END OF TABLE.           00014100
00007A 47F0 C054          0005A   167           B     RETURN4             NO MATCH FOUND, RETURN ERROR CODE.  00014200
```

```
  LOC  OBJECT CODE    ADDR1 ADDR2  STMT   SOURCE STATEMENT                                                   F08APR70   9/16/70

                                    169 *&&&&&&&&&&&&&&&&&&&&&&&&&&&&&&&&&&&&&&&&&&&&&&&&&&&&&&&&&&&&&&&&&&&&&& 00014400
                                    170 *         THIS CODE TESTS THE SERIAL DATA HANDLING ROUTINES BY ADDING     00014500
                                    171 *         A NEW ITEM TO AN EXISTING TABLE, TRYING TO ADD A DUPLICATE,     00014600
                                    172 *         AND SEARCHING FOR AN ITEM THAT IS IN THE TABLE.                 00014700
                                    173 *&&&&&&&&&&&&&&&&&&&&&&&&&&&&&&&&&&&&&&&&&&&&&&&&&&&&&&&&&&&&&&&&&&&&&& 00014800
00007E 4110 C126              0012C  174 TESTCODE LA    R1,ADSERIAL                                           00014900
000082 45E0 C028              0002E  175          BAL   R14,INSERT         GO INSERT A NEW ITEM               00015000
000086 47FF C084              0008A  176          B     *+4(R15)                                              00015100
00008A 47F0 C08A              00090  177          B     *+6                                                   00015200
00008E 0000                          178          DC    H'0'               DUMP IF INSERTION FAILS.           00015300
000090 4110 C0C2              000C8  179          LA    R1,TESTDATA        TRY TO INSERT A DUPLICATE          00015400
000094 45E0 C028              0002E  180          BAL   R14,INSERT                                            00015500
000098 47FF C096              0009C  181          B     *+4(R15)                                              00015600
00009C 07C0                          182          NOPR  0                                                     00015700
00009E 0001                          183          DC    H'1'              DUMP UNLESS I GET A DUPLICATION ERROR 00015800
0000A0 45E0 C05A              00060  184          BAL   R14,SERIAL        SEARCH FOR AN ITEM THAT IS IN TABLE.  00015900
0000A4 D505 C132 1000 00138 00000    185          CLC   SARGUMNT,0(R1)                                        00016000
0000AA 4780 C138              0013E  186          BE    SERIALOK                                              00016100
0000AE 0002                          187          DC    H'2'              DUMP IF WE CAN'T FIND IT.             00016200


0000B0 F2F6F4F8F3F3C4F1              189 TABLE    DC    C'264833D16021'   &&&&&&&&&&&&&&&&&&&&&&&&&&&&&&&&&&&&& 00016400
0000BC F1F5F7F6F4F2C4F1              190          DC    C'157642D11106'   & THIS IS THE TABLE AND TEST DATA   & 00016500
0000C8 F2F2F5F6F1F7E6F1              191 TESTDATA DC    C'225617W14947'   & FOR THE SERIAL STORAGE AND        & 00016600
0000D4 F9F8F5F1F6F3E6F0              192          DC    C'985163W01628'   & RETRIEVAL ROUTINES.               & 00016700
0000E0 F5F4F1F6F7F3C4F0              193          DC    C'541673D02825'   &&&&&&&&&&&&&&&&&&&&&&&&&&&&&&&&&&&&& 00016800
0000EC 4040404040404040              194 TABLEMPT DC    5CL12' '                                              00016900
000128 000000EC                      195 POINTER  DC    A(TABLEMPT)                                           00017000
00012C F7F7F1F5F4F3E6F1              196 ADSERIAL DC    C'771543W19667'                                       00017100
000138 F2F2F5F6F1F7                  197 SARGUMNT DC    C'225617'                                             00017200
00013E                               198 SERIALOK DS    0H                                                    00017300


                                    200 *********************************************************************** 00017500
                                    201 *                                                                     00017600
                                    202 *         ANSWER THESE QUESTIONS ABOUT THE SERIAL STORING AND SEARCHING 00017700
                                    203 *         ROUTINES ABOVE. (USE THE CODE TO GET YOUR ANSWER.)          00017800
                                    204 *                                                                     00017900
                                    205 *         1. HOW MANY TIMES WAS THE CLC "INSERTLP" EXECUTED WHEN      00018000
                                    206 *            "ADSERIAL" WAS INSERTED IN THE TABLE ?                   00018100
                                    207 *                                                                     00018200
                                    208 *         2. WHICH INSTRUCTION TESTS FOR THE END OF THE TABLE ?       00018300
                                    209 *                                                                     00018400
                                    210 *         3. WHY IS THE BASE REGISTER FOR "MANNUMBR" DIFFERENT FOR    00018500
                                    211 *            INSTRUCTIONS "INSERTLP" AND "SERIALLP" ?                 00018600
                                    212 *                                                                     00018700
                                    213 *         4. HOW MUCH DATA WOULD GET MOVED IF I WROTE:                00018800
                                    214 *              A.    MVC    FUNCTION,ADSERIAL+6  ?                    00018900
                                    215 *              B.    MVC    INDICATR,ADSERIAL+6  ?                    00019000
                                    216 *                                                                     00019100
                                    217 ******** AT THIS TIME, DISPLAY THE BLUE SIDE OF THE "ANSWER CUE".      00019200
                                    218 *                                                                     00019300
                                    219 *********************************************************************** 00019400
```

```
LOC  OBJECT CODE    ADDR1 ADDR2  STMT   SOURCE STATEMENT                                    F08APR70   9/16/70

                                 221 ***********************************************************************  00019600
                                 222 *                                                                        00019700
                                 223 *        ANSWERS FOR THE SERIAL TABLE HANDLING ROUTINES.                 00019800
                                 224 *                                                                        00019900
                                 225 *        1. "INSERTLP" WAS EXECUTED 5 TIMES, BECAUSE THERE WERE          00020000
                                 226 *           ALREADY 5 ENTRIES IN THE TABLE.                              00020100
                                 227 *                                                                        00020200
                                 228 *        2. THE INSTRUCTION: ' C     R15,POINTER '  TESTS FOR THE        00020300
                                 229 *           END OF THE TABLE, AND THE INSTRUCTION: ' BL   INSERTLP '     00020400
                                 230 *           ACTS ON THE RESULTS OF THAT TEST.                            00020500
                                 231 *                                                                        00020600
                                 232 *        3. BECAUSE THE ' DROP  R15 ' AND ' USING  DATAITEM,R1 '         00020700
                                 233 *           PSEUDO-INSTRUCTIONS CAUSE THE ASSEMBLER TO CHANGE BASE       00020800
                                 234 *           REGISTERS FOR ALL SYMBOLS IN THE "DATAITEM" DUMMY SECTION.   00020900
                                 235 *                                                                        00021000
                                 236 *        4. A) 6 BYTES, THE LENGTH OF 'FUNCTION'.                        00021100
                                 237 *           B) 1 BYTE, THE LENGTH OF 'INDICATR'.                         00021200
                                 238 *                                                                        00021300
                                 239 ***********************************************************************  00021400
```

```
LOC  OBJECT CODE    ADDR1 ADDR2  STMT   SOURCE STATEMENT                                    F08APR70   9/16/70

                                 241 *                          ***********************************          00021600
                                 242 *                          * DIRECTLY ORGANIZED DATA TABLES *          00021700
                                 243 *                          * -------- --------- ---- ------ *          00021800
                                 244 *                          ***********************************          00021900


                                 246 *+++++++++++++++++++++++++++++++++++++++++++++++++++++++++++++++++++++ 00022100
                                 247 *                                                                      00022200
                                 248 *        AS YOU HAVE SEEN, THE SERIAL SEARCH IS SIMPLE TO CODE AND     00022300
                                 249 *        QUITE WORKABLE. IT IS, HOWEVER, A BIT ON THE SLOW SIDE AS     00022400
                                 250 *        FAR AS PROCESSING TIME IS CONCERNED. MAYBE THERE IS SOMETHING 00022500
                                 251 *        FASTER...                                                     00022600
                                 252 *                                                                      00022700
                                 253 *        LET'S CONSIDER THE 'DIRECT' FORM OF STORAGE AND RETRIEVAL,    00022800
                                 254 *        WHICH GOES BY THE CARDINAL RULE: "A PLACE FOR EVERYTHING      00022900
                                 255 *        AND EVERYTHING IN IT'S PLACE".                                00023000
                                 256 *                                                                      00023100
                                 257 *        FOR THE SAKE OF ILLUSTRATION, LET US ASSUME THAT THERE        00023200
                                 258 *        ARE ONLY 1000 EMPLOYEES IN THIS COMPANY AND THAT THEIR        00023300
                                 259 *        MAN-NUMBERS RANGE FROM 1 TO 1000.. I KNOW THAT THIS ISN'T     00023400
                                 260 *        TRUE, BUT BEAR WITH ME..                                      00023500
                                 261 *                                                                      00023600
                                 262 *        IF IT WERE TRUE, WE WOULDN'T NEED TO SEARCH FOR ANY ONE ITEM. 00023700
                                 263 *        RATHER, WE COULD STORE IT IN IT'S OWN UNIQUE STORAGE LOCATION 00023800
                                 264 *        WHICH WAS EQUAL TO 'TABLE'+(12 X (MANNO-1)), AND WE'D HAVE    00023900
                                 265 *        A TABLE THAT LOOKED LIKE:                                     00024000
                                 266 *                                                                      00024100
                                 267 *        'DIRECTAB'                    NOTICE THAT EACH DATA ITEM IS IN 00024200
                                 268 *        +_________________________+   POSITION IN THE TABLE BY THE MAN 00024300
                                 269 *        |000001 DATA FOR MAN # 1  |   NUMBER THAT IT CONTAINS. IN A    00024400
                                 270 *        +-------------------------+   TABLE LIKE THIS, IT IS NOT REALLY 00024500
                                 271 *        |000002 DATA FOR MAN # 2  |   NECESSARY TO HAVE THE ARGUMENT IN 00024600
                                 272 *        +-------------------------+   EACH DATA ITEM, SINCE EACH ITEM   00024700
                                 273 *        ))))))))))))))))))))))))))    WILL BE LOCATED BY IT'S UNIQUE    00024800
                                 274 *        (((((((((((((((((((((((((((   ADDRESS (WHICH IS A DIRECT        00024900
                                 275 *        +-------------------------+   FUNCTION OF IT'S ARGUMENT) AND    00025000
                                 276 *        |001000 DATA FOR MAN #1000|   NOT BY SEARCHING THROUGH THE    00025100
                                 277 *        +-------------------------+   TABLE FOR IT'S ARGUMENT. THE      00025200
                                 278 *        |<------ 12 BYTES ------->|   MAJOR ADVANTAGE OF SUCH A TABLE 00025300
                                 279 *                                      IS IT'S SPEED AT LOCATING DATA.   00025400
                                 280 *                                                                      00025500
                                 281 *+++++++++++++++++++++++++++++++++++++++++++++++++++++++++++++++++++++ 00025600
```

```
LOC  OBJECT CODE    ADDR1 ADDR2  STMT   SOURCE STATEMENT                                          F08APR70   9/16/70

                                 283 *++++++++++++++++++++++++++++++++++++++++++++++++++++++++++++++++++++++ 00025800
                                 284 *                                                                       00025900
                                 285 *        AS I SAID BEFORE, YOU KNOW THAT WE EMPLOY MORE THAN 1000       00026000
                                 286 *        PEOPLE, SO LET'S SEE WHAT HAPPENS WHEN WE USE A MORE           00026100
                                 287 *        REALISTIC FIGURE IN THE SOLUTION OF THE LAST PROBLEM.          00026200
                                 288 *        THE FIRST THING WE MUST CONSIDER IS THAT THERE ARE 1,000,000   00026300
                                 289 *        POSSIBLE SERIAL NUMBERS IN OUR MAN-NUMBERING SCHEME.           00026400
                                 290 *        THIS MEANS THAT IF WE WANTED TO BUILD A DIRECT TABLE FOR       00026500
                                 291 *        OUR DATA ITEMS WE'VE BEEN USING, WE NEED ABOUT 12,000,000      00026600
                                 292 *        BYTES OF CORE FOR OUR TABLE. PRETTY UNREASONABLE, ISN'T IT ??  00026700
                                 293 *        IT IS ESPECIALLY UNREASONABLE WHEN YOU CONSIDER THAT WE        00026800
                                 294 *        EMPLOY SIGNIFICANTLY FEWER PEOPLE THAN THAT, SO MOST OF THE    00026900
                                 295 *        TABLE SPACE WOULD BE WASTED....                                00027000
                                 296 *                                                                       00027100
                                 297 *        THAT'S TOO BAD, BECAUSE THE DIRECT SCHEME WOULD HAVE BEEN      00027200
                                 298 *        QUITE FAST.                                                    00027300
                                 299 *                                                                       00027400
                                 300 *        FORTUNATELY, THIS IS AN OLD PROBLEM AND SOME OLD BODY          00027500
                                 301 *        FIGURED OUT AN OLD SOLUTION TO THE PROBLEM.                    00027600
                                 302 *                                                                       00027700
                                 303 *        LET'S ASSUME THAT WE HAVE 200,000 EMPLOYEES TO WORRY ABOUT.    00027800
                                 304 *        THIS MEANS THAT 4/5-THS OF OUR SERIAL NUMBERS ARE UNASSIGNED,  00027900
                                 305 *        AND THAT WE WOULD NEED ONLY A 200,000 POSITION TABLE,          00028000
                                 306 *        RIGHT?? TRUE ENOUGH, BUT, THERE IS SOMETHING ELSE WE HAVE      00028100
                                 307 *        TO CONSIDER. WE WANTED EACH MAN NUMBER TO TELL US WHERE THE    00028200
                                 308 *        ITEM GOES IN THE TABLE ON THE BASIS OF THE NUMBER ITSELF, AND  00028300
                                 309 *        THAT'S NOT GOING TO WORK TOO WELL WHEN WE TRY TO CRAM          00028400
                                 310 *        200,000 NUMBERS RANGING FROM 1 TO 1,000,000 INTO OUR 200,000   00028500
                                 311 *        ENTRY TABLE AND STILL ACCESS THEM WITHOUT A SERIAL SEARCH.     00028600
                                 312 *                                                                       00028700
                                 313 *        O.K.???, WE NEED TO TRY TO MAKE EACH MAN NUMBER FIT INTO       00028800
                                 314 *        A RANGE OF NUMBERS FROM 0 TO 199,999. THERE IS A VERY EASY     00028900
                                 315 *        WAY TO DO THIS, CALLED 'MODULO DIVISION' BY 200,000.           00029000
                                 316 *                                                                       00029100
                                 317 *        FOR THE NON-MATHEMATECALLY ORIENTED, (OR NON-SELF-CHECK        00029200
                                 318 *        KEY-PUNCH TRAINED), MODULO DIVISION IS JUST LIKE ORDINARY      00029300
                                 319 *        DIVISION, EXCEPT THAT WE THROW AWAY EVERYTHING BUT THE         00029400
                                 320 *        REMAINDER AFTER DIVISION. THIS TECHNIQUE, CALLED 'HASHING'     00029500
                                 321 *        LOOKS LIKE:                                                    00029600
                                 322 *                                                                       00029700
                                 323 *                    QUOTIENT(WHICH WE JUNK) + REMAINDER(A NUMBER FROM  00029800
                                 324 *                ____________                            0 TO 199,999,  00029900
                                 325 *         200,000) MAN NUMBER                            WHICH WE KEEP) 00030000
                                 326 *                                                                       00030100
                                 327 *        SO. NOW EVERY MAN NUMBER 'HASHES' DOWN TO A NUMBER FROM 0 TO   00030200
                                 328 *        199,999 ; WHICH, WHEN MULTIPLIED BY THE DATA LENGTH (12 BYTES  00030300
                                 329 *        IN THIS EXAMPLE) GIVES US THE ADDRESS AT WHICH THE ITEM IS TO  00030400
                                 330 *        BE STORED.                                                     00030500
                                 331 *++++++++++++++++++++++++++++++++++++++++++++++++++++++++++++++++++++++ 00030600
```

```
DIRECTST                    DIRECTS2
                               *****A2*********
   ****A1********              *               *
  *INDICATE STORE *            *CONVERT KEY TO *
  *   OPERATION   * -------->*A BINARY NUMBER*
  *               *    A      *               *
   ***************   |        *               *
                     |         *****************
          +----------|                 |
          |                            |
DIRECTSH  |                            V
                               *****B2*********
   ****B1********              * DIVIDE BY 20, *
  *INDICATE SEARCH*            *   MULTIPLY    *
  *   OPERATION   *            * REMAINDER BY  *
  *               *            *LENGTH OF DATA *
   ***************             *  ITEM (12).   *
                               *****************
                                      |
                                      |
                                      V
                                   .*.                ALRDYIN
                                C2   *.
                              .*       *.                ****C3********
                            .*  IS THIS  *. YES        *RETURN, CODE =4*
                           *.ENTRY BLANK ?.* -------->*/ DUPLICATE OR *
                            *.           .*            *  FOUND ITEM.  *
                              *.       .*               ***************
                                *. .*
                                 * NO
                                      |
                                      |
                                      V
                                   .*.
                                D2   *.                *****D3*********
                              .*       *.              *               *
                            .*   STORE   *. YES        *INSERT THE ITEM*
                           *. OPERATION ? .* -------->* IN THE TABLE. *
                            *.           .*            *               *
                              *.       .*              *               *
                                *. .*                   *****************
                                 * NO                          |
                                      |                       |
                                      |<----------------------+
                                      |
                                      V
                                 ****E2********
                                *RETURN, CODE=0 *
                                */ ITEM ENTERED *
                                *OR NO SUCH ITEM*
                                 ***************
```

```
  LOC  OBJECT CODE    ADDR1 ADDR2  STMT   SOURCE STATEMENT                                         F08APR70   9/16/70
                                   346 *++++++++++++++++++++++++++++++++++++++++++++++++++++++++++++++++++++++ 00032100
                                   347 *                                                                       00032200
                                   348 *        BRANCHING TO 'DIRECTST' CAUSES A DATA ITEM TO BE ADDED TO      00032300
                                   349 *        THE TABLE (PROVIDED IT IS NOT ALREADY IN THE TABLE). A CODE    00032400
                                   350 *        OF 0 IS RETURNED IF THE ITEM GETS INSERTED, 4 IF IT DOESN'T.   00032500
                                   351 *        BRANCHING TO 'DIRECTSH' LOCATES THE ITEM WHOSE ARGUMENT IS     00032600
                                   352 *        PASSED. ON RETURN, REG 15 CONTAINS 0 IF FOUND, 4 IF NOT FOUND. 00032700
                                   353 *        REGISTER 1 IS USED TO PASS THE ADDRESS OF EITHER A DATA ITEM   00032800
                                   354 *        OR A SEARCH ARGUMENT, DEPENDING UPON THE DESIRED OPERATION.    00032900
                                   355 *                                                                       00033000
                                   356 *        FOR PURPOSES OF ILLUSTRATION, AND, JUST FOR THE SAKE OF        00033100
                                   357 *        BEING QUITE LAZY, I'M GOING TO RESTRICT THE TABLE 'DIRECTAB'   00033200
                                   358 *        TO A 20 ITEM TABLE, RATHER THAN THE 200,000 ITEM ONE WE'VE     00033300
                                   359 *        BEEN TALKING ABOUT.                                            00033400
                                   360 *                                                                       00033500
                                   361 *++++++++++++++++++++++++++++++++++++++++++++++++++++++++++++++++++++++ 00033600
00013E 47F0 C292            00298  362          B     DIRECT              BRANCH TO THE TESTING CODE.          00033700

000142 1BFF                        364 DIRECTST SR    R15,R15             SET UP STORE INDICATION              00033900
000144 1821                        365          LR    R2,R1                                                    00034000
000146 F275 C28A 1000 00290 00000  366 DIRECTS2 PACK  DOUBLE,MANNUMBR     CONVERT 'MAN NUMBER' TO AN ADDRESS   00034100
00014C 4F10 C28A            00290  367          CVB   R1,DOUBLE           IN THE TABLE, BY USING MODULO        00034200
000150 1B00                        368          SR    R0,R0               DIVISION BY 20 (THE MAXIMUM NUMBER   00034300
000152 5D00 C182            00188  369          D     R0,F20              OF ITEMS OUR TABLE WILL HOLD).       00034400
000156 1810                        370          LR    R1,R0                                                    00034500
000158 8900 0002            00002  371          SLL   R0,2   }x                                                00034600
00015C 8910 0003            00003  372          SLL   R1,3   }12                                               00034700
000160 1A10                        373          AR    R1,R0                                                    00034800
000162 4111 C194            0019A  374          LA    R1,DIRECTAB(R1)                                          00034900
000166 D505 1000 C186 00000 0018C  375          CLC   MANNUMBR,BLANKS     IS THIS SPACE EMPTY ?                00035000
00016C 4770 C172            00178  376          BNE   ALRDYIN             NO, DUPLICATE, RETURN.               00035100
000170 440F C18C            00192  377          EX    R0,SELECT(R15)      EITHER INSERT THE ITEM OR NO-OP.     00035200
000174 1BFF                        378          SR    R15,R15             GOOD RETURN, SET CODE = 0.           00035300
000176 07FE                        379          BR    R14                                                      00035400
000178 41F0 0004            00004  380 ALRDYIN  LA    R15,4               SET UP ERROR RETURN CODE.            00035500
00017C 07FE                        381          BR    R14                                                      00035600

00017E 41F0 0006            00006  383 DIRECTSH LA    R15,6               SET UP SEARCH INDICATOR.             00035800
000182 47F0 C140            00146  384          B     DIRECTS2            GO SEARCH TABLE FOR ITEM.            00035900


                                   386 *&&&&&&&&&&&&&&&&&&&&&&&&&&&&&&&&&&&&&&&&&&&&&&&&&&&&&&&&&&&&&&&&&&&&&& 00036100
                                   387 *        THESE ARE THE CONSTANTS USED BY THE DIRECT STORAGE AND         00036200
                                   388 *        RETRIEVAL ROUTINES.                                            00036300
                                   389 *&&&&&&&&&&&&&&&&&&&&&&&&&&&&&&&&&&&&&&&&&&&&&&&&&&&&&&&&&&&&&&&&&&&&&& 00036400
000186 0000
000188 00000014                    390 F20      DC    F'20'               NUMBER OF ITEMS IN THE TABLE         00036500
00018C 404040404040                391 BLANKS   DC    6C' '                                                    00036600
000192 D20B 1000 2000 00000 00000  392 SELECT   MVC   MANNUMBR(ITEMLEN),0(R2)                                  00036700
000198 0700                        393          NOPR  0                                                        00036800
00019A 4040404040404040            394 DIRECTAB DC    20CL12' '                                                00036900
000290                             395 DOUBLE   DS    D                                                        00037000
```

```
  LOC  OBJECT CODE    ADDR1 ADDR2  STMT   SOURCE STATEMENT                                         F08APR70   9/16/70

                                    397 *&&&&&&&&&&&&&&&&&&&&&&&&&&&&&&&&&&&&&&&&&&&&&&&&&&&&&&&&&&&&&&&&&&&&&& 00037200
                                    398 *        THIS CODE TESTS THE DIRECT STORAGE AND RETRIEVAL CODE ABOVE.   00037300
                                    399 *        IT ADDS 3 ITEMS TO THE TABLE AND THEN RETRIEVES ONE OF THEM.   00037400
                                    400 *&&&&&&&&&&&&&&&&&&&&&&&&&&&&&&&&&&&&&&&&&&&&&&&&&&&&&&&&&&&&&&&&&&&&&& 00037500
000298 4110 C2DC            002E2  401 DIRECT   LA    R1,ITEM1            FIRST ITEM TO BE INSERTED            00037600
00029C 45E0 C13C            00142  402          BAL   R14,DIRECTST                                             00037700
0002A0 47FF C29E            002A4  403          B     *+4(R15)                                                 00037800
0002A4 47F0 C2A4            002AA  404          B     *+6                                                      00037900
0002A8 0003                        405          DC    H'3'                DUMP IF IT DOESN'T GET INSERTED.     00038000
0002AA 4110 C2E8            002EE  406          LA    R1,ITEM2            SECOND ITEM TO INSERT.               00038100
0002AE 45E0 C13C            00142  407          BAL   R14,DIRECTST                                             00038200
0002B2 47FF C2B0            002B6  408          B     *+4(R15)                                                 00038300
0002B6 47F0 C2B6            002BC  409          B     *+6                                                      00038400
0002BA 0004                        410          DC    H'4'                DUMP IF IT DOESN'T GET INSERTED.     00038500
0002BC 4110 C2F4            002FA  411          LA    R1,ITEM3            THIRD ITEM TO INSERT.                00038600
0002C0 45E0 C13C            00142  412          BAL   R14,DIRECTST                                             00038700
0002C4 47FF C2C2            002C8  413          B     *+4(R15)                                                 00038800
0002C8 47F0 C2C8            002CE  414          B     *+6                                                      00038900
0002CC 0005                        415          DC    H'5'                DUMP IF INSERTION FAILS.             00039000
0002CE 4110 C300            00306  416          LA    R1,SEARCH1          ITEM TO BE SEARCHED FOR.             00039100
0002D2 45E0 C178            0017E  417          BAL   R14,DIRECTSH                                             00039200
0002D6 D505 1000 C300 00000 00306  418          CLC   MANNUMBR,SEARCH1    IF THE RETURNED VALUE DOESN'T MATCH, 00039300
0002DC 478C C306            0030C  419          BE    DIRECTOK            THEN TAKE A DUMP.                    00039400
0002E0 0006                        420          DC    H'6'                                                     00039500

0002E2 F1F1F1F1F1F1E6F1            422 ITEM1    DC    C'111111W11111'     &&&&&&&&&&&&&&&&&&&&&&&&&&&&&&&&&&&& 00039700
0002EE F1F2F3F4F5F6C4F1            423 ITEM2    DC    C'123456D12345'     & THESE ARE THE TEST DATA ITEMS    & 00039800
0002FA F4F4F4F4F3F1C4F4            424 ITEM3    DC    C'444431D44444'     & FOR THE DIRECT DATA TEST ROUTINE.& 00039900
000306 F1F1F1F1F1F1                425 SEARCH1  DC    C'111111'           &&&&&&&&&&&&&&&&&&&&&&&&&&&&&&&&&&&& 00040000

                                    427 *********************************************************************** 00040200
                                    428 *                                                                       00040300
                                    429 *        ANSWER THE FOLLOWING QUESTIONS CONCERNING THE DIRECT STORAGE   00040400
                                    430 *        AND RETRIEVAL ROUTINE ON THE PREVIOUS PAGE. (USE THE CODE TO   00040500
                                    431 *        FIND YOUR ANSWERS.                                             00040600
                                    432 *                                                                       00040700
                                    433 *        1.WHAT ARE WE DOING WITH THE INSTRUCTION SEQUENCE:             00040800
                                    434 *              LR    R1,R0                                              00040900
                                    435 *              SLL   R0,2                                               00041000
                                    436 *              SLL   R1,3                                               00041100
                                    437 *              AR    R1,R0                                              00041200
                                    438 *                                                                       00041300
                                    439 *        2. WHAT HAPPENS WHEN WE EXECUTE THE " EX  R0,SELECT(R15) "     00041400
                                    440 *           INSTRUCTION WHEN WE ARE TRYING TO:                          00041500
                                    441 *              A. INSERT "ITEM1"  ?                                     00041600
                                    442 *              B. LOCATE "SEARCH1" ?                                    00041700
                                    443 *                                                                       00041800
                                    444 *********************************************************************** 00041900
```

```
LOC   OBJECT CODE    ADDR1 ADDR2  STMT   SOURCE STATEMENT                                          F08APR70   9/16/70

                                  446 ***********************************************************************  00042100
                                  447 *        ANSWER THE FOLLOWING CONCERNING THE DUMP ON THE NEXT PAGE:     00042200
                                  448 *                                                                       00042300
                                  449 *        1. AT WHAT POINT IN THE PROGRAM DID WE TAKE THE DUMP ?         00042400
                                  450 *                                                                       00042500
                                  451 *        2. WHAT WAS THE RETURN CODE ?                                  00042600
                                  452 *                                                                       00042700
                                  453 *        3. WHY WAS THIS RETURN CODE GENERATED ?                        00042800
                                  454 *                                                                       00042900
                                  455 *        4. WHAT STORAGE ADDRESS DOES MAN NUMBER 444431 'HASH' TO IN    00043000
                                  456 *           OUR DIRECT TABLE 'DIRECTAB' ?                               00043100
                                  457 *                                                                       00043200
                                  458 ******** WHEN YOU HAVE FINISHED THESE, DISPLAY THE RED SIDE OF THE      00043300
                                  459 *        "ANSWER CUE".                                                  00043400
                                  460 *                                                                       00043500
                                  461 ***********************************************************************  00043600
00030C                            462 DIRECTOK DS    OH                                                      00043700
```

```
F.P. REGS.  00.000000 00000000   00.12C002 0201D970   FF.040001 5000AC16   00.0C0000 0001D730

REGS 0-7     0000002C 0005ACDE 0005ADBA 00000000    0001AB98 0001B0E8 0001D140 0001BA48
REGS 8-15    0001D0A0 00000000 0001D0C8 00000000    6F05AAC6 0005B204 8F05AD84 00000004

000000    00000000 00000000 00000000 00000000    0005AAC0 00000000 FF040080 A000A93C  *................................*
000020    FF050001 4007EA2C FFB50001 6F05AD8E    0000FF00 00000000 FE04000F 80000A1E  *.... ...........................*
000040    00070D98 08000000 00001468 00005920    02C031A4 0000996C C0040000 00007498  *................................*
000060    0C040000 00007BC8 00040000 00007588    00000000 00012D10 00040000 0000751A  *.......H........................*

05AAC0    90ECD0CC 05C041F0 C73E50FD C00850DF    00C418DF D703D008 D00858F0 C78AD201  *.......0G...........P......0G.K.*
05AAE0    F000C022 47F0C024 07FE47F0 C07841F0    C0AAD505 F0001000 4780C054 41F0F00C  *0....0.....0...0..N.0........00.*
05AB00    59F0C122 4740C02C D20BF000 100041F0    F00C50F0 C1221BFF 07FE41F0 000407FE  *.0A.. ..K.0....00..0A......0....*
05AB20    4110C0AA D5051000 C1324780 C0504110    100C5910 C1224740 C05E47F0 C0544110  *....N...A...........A.. ...0....*
05AB40    C12645E0 C02847FF C08447F0 C08A0000    4110C0C2 45E0C028 47FFC096 07000001  *A..........0.......B............*
05AB60    45E0C05A D505C132 10004780 C1380002    F2F6F4F8 F3F3C4F1 F6F0F2F1 F1F5F7F6  *....N.A.....A...264833D160211576*
05AB80    F4F2C4F1 F1F1F0F6 F2F2F5F6 F1F7E6F1    F4F9F4F7 F9F8F5F1 F6F3E6F0 F1F6F2F8  *42D11106225617W14947985163W01628*
05ABAC    F5F4F1F6 F7F3C4F0 F2F8F2F5 F7F7F1F5    F4F3E6F1 F9F6F6F7 40404040 40404040  *541673D02825771543W19667         *
05ABC0    40404040 40404040 40404040 40404040    40404040 40404040 40404040 40404040  *                                *
05ABE0    40404040 40404040 0005ABB8 F7F7F1F5    F4F3E6F1 F9F6F6F7 F2F2F5F6 F1F747F0  *         ....771543W19667225617.0*
05AC00    C2921BFF 1821F275 C28A1000 4F10C28A    1B005D00 C1821810 89000002 89100003  *B.....2.B.....B.....A...........*
05AC20    1A104111 C194D5C5 1000C186 4770C172    440FC18C 1BFF07FE 41F00004 07FE41F0  *....A.N...A...A...A......0.....0*
05AC40    000647F0 C1400000 00000014 40404040    4040D20B 10002000 07004040 40404040  *...0A ......      K.......      *
05AC60    40404040 40404040 40404040 40404040    40404040 40404040 40404040 40404040  *                                *
05AC80    40404040 40404040 40404040 40404040    40404040 40404040 40404040 40404040  *                                *
05ACA0    40404040 40404040 40404040 40404040    40404040 40404040 40404040 40404040  *                                *
05ACC0    40404040 40404040 40404040 40404040    40404040 40404040 40404040 4040F1F1  *                              11*
05ACE0    F1F1F1F1 E6F1F1F1 F1F14040 40404040    40404040 40404040 40404040 40404040  *1111W11111                         *
05AD00    40404040 40404040 40404040 40404040    40404040 40404040 4040F1F2 F3F4F5F6  *                            123456*
05AD20    C4F1F2F3 F4F54040 40404040 40404040    40404040 40404040 40404040 40404040  *D12345                            *
05AD40    40404040 40404040 4040C504 00000000    00000000 0444431F 4110C2DC 45E0C13C  *           E.. ............B...A.*
05AD60    47FFC29E 47F0C2A4 00034110 C2E845E0    C13C47FF C2BC47F0 C2B60004 4110C2F4  *..B..0B.....BY..A...B..0B.....B4*
05AD80    45E0C13C 47FFC2C2 47F0C2C8 00054110    C30045E0 C178D505 1000C300 478CC306  *..A...BB.0BH....C...A.N...C...C.*
05DA0     0006F1F1 F1F1F1F1 E6F1F1F1 F1F1F1F2    F3F4F5F6 C4F1F2F3 F4F5F4F4 F4F4F3F1  *..111111W11111123456D12345444431*
05ADC0    C4F4F4F4 F4F4F1F1 F1F1F1F1 47F0C42E    1821F275 C28A1000 4F10C28A 1B005D00  *D44444111111.0D...2.B.....B.....*
05ADE0    C42A8900 000241F0 C38A1AF0 581F0000    12114770 C33841FF 000147F0 C356D505  *D......0C..0........C......0C.N.*
05AE00    10002000 4780C37A 41F0100C D202C383    100C5810 C3821211 4770C338 D202F000  *......C..0..K.C.....C.....C.K.0.*
05AE20    C38758F0 C386181F D20B1000 2000D702    100C100C 41FF00F 50F0C386 1BFF07FE  *C..0C...K.....P..........0C.....*
05AF40    41F00004 07FE0000 00000000 0005AE78    00C00000 00000000 00000000 00000000  *.0...............................*
05AE60    00000000 00000000 00000000 00000000    00000000 00000000 40404040 40404040  *........................         *
05AE80    40404040 40404040 40404040 40404040    40404040 40404040 40404040 40404040  *                                *
05AFA0    40404040 40404040 40404040 40404040    40404040 40404040 40404040 40404040  *                                *
05AEC0    40404040 F0F0F0F0 F1F8F0F0 F0F0F1E6    F1F2F3F4 F5F6F0F0 F0F0F6C4 F3F2F5F6  *   4000018000001W12345600006D3256*
05AEE0    F8F4F0F0 F0F0F1C4 F9F8F7F6 F5000000    00030D40 4110C403 45E0C30A 47FFC43A  *8400001D98765...... ..D...C...D.*
05AF00    47F0C44C 00074110 C40F45E0 C30A47FF    C44C47F0 C4520008 4110C41B 45E0C30A  *.0D ....D...C...D..0D.....D...C.*
05AF20    47FFC45E 47F0C464 00094110 C3FD45E0    C30A47FF C470000A 07000014 4110C78E  *..D..0D.....C...C...D.........G.*
05AF40    182148F2 000006F0 4CF0C794 41AFC4AA    48F10002 06F04CF0 C7961AAF 48F10004  *...2...0.0G...D..1...0.0G....1..*
05AF60    06F01EFF 1AAF481A 0000000B 47F0C612    00440020 FFE7003F 0017FFEF 003400C0  *.0............0F......X.........*
05AF80    FFE00038 0016FFFB C03D001E FFF6003A    000CFFF1 002B000D FFF90038 0010FFDC  *.............6.....1.....9......*
05AFA0    00360018 FFFC003C 001EFFF6 00430025    FFE5003E 0016FFF4 00330008 FFE10037  *...........6.....V.....4........*
05AFC0    0019FFFB 00290028 FFFC0044 0027FFEC    0041001A FFEF0032 000BFFE0 003B001C  *................................*
05AFE0    FFF90042 0023FFF2 00260020 FFE70049    0019FFEE 00350000 FFDF0039 001BFFF9  *.9.....2.....X................9*
05B000    003C0014 FFF6004E 0025FFE9 003D0015    FFF50035 000EFFDD 00380018 FFFB003D  *.....6.....Z.....5..............*
05B020    0020FFF3 003A002A FFDD0049 001AFFEE    0052CC20 FFEC004C 0020FFF1 00330014  *...3.......................1....*
05B040    FFEC0041 0023FFE7 00400018 FFF20035    000DFFDF 00340016 FFFE003D 001FFFF5  *.......X. ...2................5*
05B060    003A002A FFDD0035 002BFFDB 0034002B    FFE00038 002AFFDD 00330028 FFE20042  *.............................S..*
05B080    0024FFE6 003F001B FFF1003B 000BFFDB    00340016 FFFE003D 0020FFF0 004E000C  *...W.....1...................0....*
05B0A0    FFE70035 0021FFF0 002A0002 FFD90038    0021FFF7 003C0022 FFEF0044 0020FFF5  *.X.....0.....R.....7...........V*
05B0C0    003F0017 FFEF0034 000CFFCC 00380016    FFFB003D 001EFFF6 47F0C64C 18614140  *.......................6.0F.... *
05B0E0    00044150 00604125 C6728850 0001D505    20006000 4780C646 4740C638 13551A25  *........F.....N.......F.. F.....*
```

```
05B100    10554640 C62441F0 000407FE 18121BFF    07FE4110 C67245E0 C61647FF C65847F0  *... F..0............F...F...F..0*
05B120    C65E0C0C 4110C678 45E0C616 47FFC66A    00CD0700 47F0C732 F2F6F4F8 F3F3F5F5  *F.....F...F...F......0G.26483355*
05B140    F5F1F2F1 F0F1F0F4 F3F8E640 40404040    F0F9F8F6 F7F3C440 4040404C F1F2F1F3  *5121010438W      098673D      1213*
05B160    F4F8E640 40404040 F1F4F6F7 F9F2C440    40404040 F2F6F4F8 F3F3C440 40404040  *48W      146792D      264833D      *
05B180    F2F7F6F5 F9F9E640 40404040 F3F3F3F4    F8F2C440 40404040 F4F1F3F7 F3F3E640  *276599W      333482D      413733W *
05B1A0    40404040 F5F5F1F7 F8F3C440 40404040    F5F9F9F4 F5F2E640 4040404C F6F7F8F9  *     551783D      599452W      6789*
05B1C0    F1F2C440 40404040 F7F7F1F5 F3F2C440    40404C40 F8F0F0F3 F2F0E640 40404040  *12D      771532D      800320W      *
05B1E0    F8F8F0F9 F3F2C440 40404040 F9F1F0F2    F3F4C440 40404040 58DD0004 98ECD00C  *880932D      910234D      ........*
05B200    07FE05EF 58F0916A 00066F68 00000000    00060840 000648E8 000635E0 00061C38  *.....0............. ...Y........*
05B220    00C5E5A8 00061C38 00000000 00000000    00459000 C9C5C6F4 F5F1C940 40404040  *..V..................IEF451I     *
05B240    40404040 4B404040 40404040 404B4040    0005B51E 00010018 000200BA 0006E84C  *    .         .  ...............Y *
05B260    90ECD00C 05C004F0 07004110 C0100511    0F05B304 7FFF0A0E 58B00010 9110B074  *.......0........................*

05B820    50401010 4340A008 12444780 885C4820    A00E5420 8A9E4780 87FC0620 5A20B010  *. ... ........................*
```

```
LOC  OBJECT CODE    ADDR1 ADDR2  STMT   SOURCE STATEMENT                                    F08APR70   9/16/70

                                 464 ***********************************************************************  00043900
                                 465 *                                                                        00044000
                                 466 *        ANSWERS FOR THE DIRECT STORAGE AND RETRIEVAL ROUTINE.           00044100
                                 467 *                                                                        00044200
                                 468 *        1. MULTIPLYING REGISTER 1 BY 12 TO GET THE PROPER DISPLACEMENT  00044300
                                 469 *           IN THE TABLE 'DIRECTAB'.                                     00044400
                                 470 *                                                                        00044500
                                 471 *        2. A) THE DATA ITEM 'ITEM1' GETS MOVED INTO THE TABLE.          00044600
                                 472 *           B) NOTHING (NOP).                                            00044700
                                 473 *                                                                        00044800
                                 474 ***********************************************************************  00044900


                                 476 ***********************************************************************  00045100
                                 477 *                                                                        00045200
                                 478 *        ANSWERS FOR THE DIRECT STORAGE ROUTINE DUMP.                    00045300
                                 479 *                                                                        00045400
                                 480 *        1. WE WERE TRYING TO INSERT 'ITEM3' INTO THE TABLE.             00045500
                                 481 *                                                                        00045600
                                 482 *        2. THE RETURN CODE WAS 4.                                       00045700
                                 483 *                                                                        00045800
                                 484 *        3. THE SPOT WE WERE TRYING TO USE IN THE TABLE ALREADY          00045900
                                 485 *           CONTAINED A DATA ITEM.                                       00046000
                                 486 *                                                                        00046100
                                 487 *        4. X'05AEDE' OR 'STORAGE'+X'021E' OR 'DIRECTAB'+X'84'.          00046200
                                 488 *                                                                        00046300
                                 489 ***********************************************************************  00046400
```

```
LOC  OBJECT CODE    ADDR1 ADDR2  STMT   SOURCE STATEMENT                                          F08APR70   9/16/70
                                 491 *                        ************************************          00046600
                                 492 *                        * DIRECT DATA STORAGE WITH SYNONYMS. *          00046700
                                 493 *                        * ------ ---- ------- ---- --------- *          00046800
                                 494 *                        ************************************          00046900


                                 496 *-------------------------------------------------------------------- 00047100
                                 497 *                                                                      00047200
                                 498 *        SYN.ONYM /'SIN-E-NIM/. N (ME SINONYME, FR. L SYNONYNUM FR.     00047300
                                 499 *                 GK SYNONYMON. FR. NEUT. OF SYNONYMOS SYNONOMOUS,      00047400
                                 500 *                 FR. SYN- +ONYMA NAME) 1. ONE OF TWO OR MORE WORDS     00047500
                                 501 *                 OR EXPRESSIONS OF THE SAME LANGUAGE THAT HAVE THE     00047600
                                 502 *                 SAME OR NEARLY THE SAME ESSENTIAL MEANING IN SOME     00047700
                                 503 *                 OR ALL SENSES: 2: A SYMBOLIC OR FIGURATIVE NAME:      00047800
                                 504 *                 METONYM 3: A TAXONOMIC NAME REJECTED AS BEING         00047900
                                 505 *                 INCORRECTLY APPLIED OR INCORRECT IN FORM. -           00048000
                                 506 *                 SYN.ONYM.IC /SIN-E-NIM-IK/ OR SYN.ONYM.I.CAL /I-KAL/  00048100
                                 507 *                 ADJ- SYN.ONYM.I.TY /-NIM-ET-E/ N.                     00048200
                                 508 *                                                                      00048300
                                 509 *        COURTESY OF: WEBSTER'S 7TH NEW COLLEGIATE DICTIONARY           00048400
                                 510 *                     G. & C. MERRIAM COMPANY, 1967.                   00048500
                                 511 *                                                                      00048600
                                 512 *____________________________________________________________________ 00048700


                                 514 *++++++++++++++++++++++++++++++++++++++++++++++++++++++++++++++++++++ 00048900
                                 515 *                                                                      00049000
                                 516 *        AS YOU CAN SEE, OUR 'HASHING' TECHNIQUE CAUSES US TO DEVELOP   00049100
                                 517 *        'SYNONYMS', WHEN TWO DIFFERENT NUMBERS 'HASH' TO THE SAME      00049200
                                 518 *        ADDRESS. SO, WE NEED TO DO SOMETHING TO CORRECT THIS FAULT     00049300
                                 519 *        IN OUR SCHEME. ONE OF THE METHODS OF HANDLING THIS PROBLEM     00049400
                                 520 *        IS TO PLACE THE 'SYNONYM' IN THE NEXT FREE SPOT IN THE TABLE   00049500
                                 521 *        AND 'CHAIN' THE ORIGINAL AND IT'S SYNONYM TOGETHER BY AN       00049600
                                 522 *        ADDRESS VALUE, SO THAT WE GET:                                 00049700
                                 523 *                                                                      00049800
                                 524 *        +-------------------+------+                                  00049900
                                 525 *        | HASHED ITEM # 1   |000000| 0'S INDICATE ABSENCE OF A CHAIN. 00050000
                                 526 *        +-------------------+------+                                  00050100
                                 527 *        | HASHED ITEM # 2   |  +---+-->+ (CHAINING                     00050200
                                 528 *        +-------------------+------+   |  POINTER.)                  00050300
                                 529 *        ))))))))))))))))))))))))))))))   |                             00050400
                                 530 *        (((((((((((((((((((((((((((((   |                             00050500
                                 531 *        +-------------------+------+   V                             00050600
                                 532 *        | SYNONYM FOR # 2   |000000|<--+                             00050700
                                 533 *        +-------------------+------+                                  00050800
                                 534 *        |<---- 12 BYTES --->|<-3-->|                                  00050900
                                 535 *                                                                      00051000
                                 536 *++++++++++++++++++++++++++++++++++++++++++++++++++++++++++++++++++++ 00051100
```

```
LOC  OBJECT CODE    ADDR1 ADDR2  STMT   SOURCE STATEMENT                                             F08APR70   9/16/70

                                  538 *+++++++++++++++++++++++++++++++++++++++++++++++++++++++++++++++++++++++ 00051300
                                  539 *                                                                        00051400
                                  540 *        SINCE WE ARE GOING TO USE POINTERS TO LOCATE THE 'CHAINS',      00051500
                                  541 *        LET'S MAKE THE CHAINS SEPARATE. AND, SINCE WE ARE GOING TO      00051600
                                  542 *        POINT TO SYNONYMS, WHY BOTHER PUTTING THEM IN THE MAIN          00051700
                                  543 *        TABLE?? INSTEAD, LET'S RESERVE A TABLE TO 'HASH' INTO, AND      00051800
                                  544 *        FILL IT ONLY WITH POINTERS. THEN, WE'LL USE A SEPARATE AREA     00051900
                                  545 *        TO CONTAIN THE CHAINS OF DATA ITEMS.                            00052000
                                  546 *                                                                        00052100
                                  547 *        EACH DATA ITEM HAS CHANGED SLIGHTLY NOW, IN THAT WE HAVE        00052200
                                  548 *        ADDED A 3-BYTE ADDRESS FIELD TO THE END OF THE STANDARD         00052300
                                  549 *        DATA.                                                           00052400
                                  550 *                                                                        00052500
                                  551 *        OUR TABLE WOULD LOOK LIKE THIS:                                 00052600
                                  552 *                                                                        00052700
                                  553 *        'HASHTAB'             'CHAINS'                                  00052800
                                  554 *        +________+            +------+-----------+------+               00052900
                                  555 *        |   +----+----------->|200000| DATA ITEM |   +--+------>+       00053000
                                  556 *        +--------+            +------+-----------+------+       |       00053100
                                  557 *        |00000000|     +----->|400009| DATA ITEM |000000|       |       00053200
                                  558 *        +--------+     |      +------+-----------+------+       |       00053300
                                  559 *        |   +----+-----)----->|800002| DATA ITEM |000000|       |       00053400
                                  560 *        +--------+     |      +------+-----------+------+       V       00053500
                                  561 *        |00000000|     |      |600000| DATA ITEM |000000|<------+       00053600
                                  562 *        +--------+     |      +------+-----------+------+   (POINTS TO  00053700
                                  563 *        |00000000|     |  +-->|                         |   THE START   00053800
                                  564 *        +--------+     |  |   +-------------------------+   OF THIS     00053900
                                  565 *        ))))))))))     |  |   |   ( FREE AREA )         |   LINE.)      00054000
                                  566 *        ((((((((((     |  |   +-------------------------+               00054100
                                  567 *        +--------+     |  |   |                         |               00054200
                                  568 *        |   +----+---->+  |   |                         |               00054300
                                  569 *        +--------+        |   |                         |               00054400
                                  570 *        |00000000|        |   )))))))))))))))))))))))))))               00054500
                                  571 *        +--------+        |   (((((((((((((((((((((((((((               00054600
                                  572 *        ))))))))))        |   +-------------------------+               00054700
                                  573 *        ((((((((((        |                                             00054800
                                  574 *        +--------+        |   ***** NOTE ***** THE FIELDS SHOWN IN      00054900
                                  575 *                          |   THE FIRST COLUMN OF 'CHAINS' ABOVE ARE    00055000
                                  576 *        'NXAVAIL'         |   THE SIX BYTE MAN NUMBERS USED FOR         00055100
                                  577 *(ADDR.  +--------+        |   SEARCH ARGUMENTS.                         00055200
                                  578 *OF 1ST  |   +----+------->+                                             00055300
                                  579 *UNUSED  +--------+                                                      00055400
                                  580 *BYTE IN 'CHAINS'.)                                                      00055500
                                  581 *                                                                        00055600
                                  582 *+++++++++++++++++++++++++++++++++++++++++++++++++++++++++++++++++++++++ 00055700
```

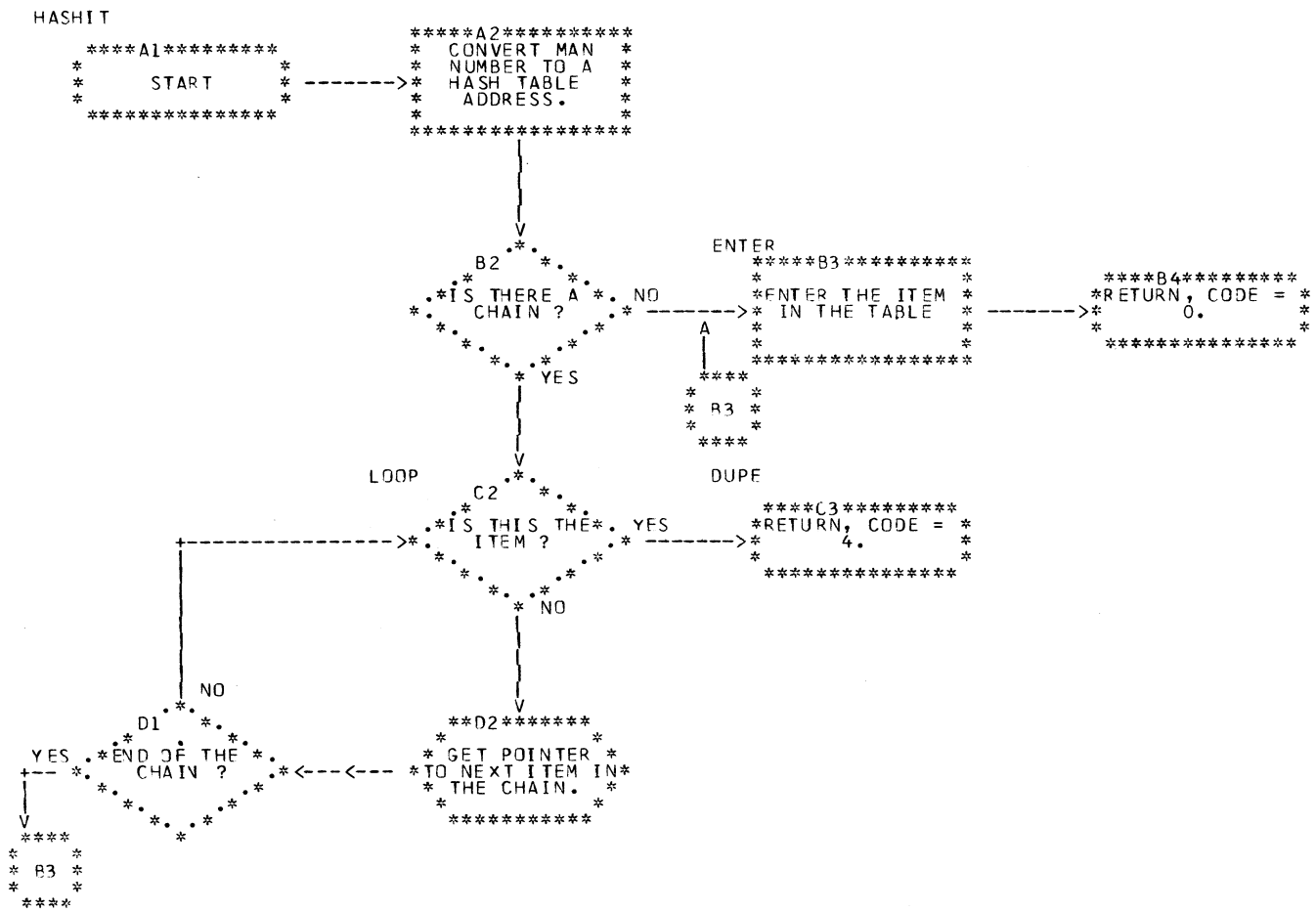
HASHIT
A1
START
A2
CONVERT MAN NUMBER TO A HASH TABLE ADDRESS.
B2
IS THERE A CHAIN ?
NO
YES
ENTER
B3
ENTER THE ITEM IN THE TABLE
A
B3
B4
RETURN, CODE = 0.
LOOP
C2
IS THIS THE ITEM ?
YES
NO
DUPE
C3
RETURN, CODE = 4.
NO
D1
END OF THE CHAIN ?
YES
D2
GET POINTER TO NEXT ITEM IN THE CHAIN.
B3

```
 LOC  OBJECT CODE    ADDR1 ADDR2  STMT   SOURCE STATEMENT                                          F08APR70   9/16/70

000300 47F0 C42E            00434   597          B     CHAINTST            BRANCH AROUND THE IN-LINE CODE.      00057200
000310 1821                         598 HASHIT   LR    R2,R1                                                    00057300
000312 F275 C28A 1000 00290 00000   599          PACK  DOUBLE,MANNUMBR     CONVERT THE 'KEY' TO AN ADDRESS      00057400
000318 4F10 C28A            00290   600          CVB   R1,DOUBLE           USING MODULO DIVISION BY             00057500
00031C 1B00                         601          SR    R0,R0               200,000.                             00057600
00031E 5D00 C42A            00430   602          D     R0,F200000                                               00057700
000322 8900 0002            00002   603          SLL   R0,2                                                     00057800
000326 41FC C38A            00390   604          LA    R15,HASHTAB                                              00057900
00032A 1AF0                         605          AR    R15,R0                                                   00058000
00032C 581F 0000            00000   606          L     R1,0(R15)                                                 00058100
000330 1211                         607          LTR   R1,R1               CHECK FOR THE EXISTENCE OF A CHAIN.  00058200
000332 4770 C338            0033E   608          BNZ   LOOP                                                     00058300
000336 41FF 0001            00001   609          LA    R15,1(R15)          * * * * REFERRED TO IN QUESTION 3.   00058400
00033A 47F0 C356            0035C   610          B     ENTER                                                    00058500
00033E D505 1000 2000 00000 00000   611 LOOP     CLC   MANNUMER,MANNUMBR-DATAITEM(R2) SEARCH FOR THE ITEM.    00058600
000344 4780 C37A            00380   612          BE    DUPE                                                     00058700
000348 41F0 1000            00000   613          LA    R15,CHAINPTR                                             00058800
00034C D202 C383 1000 00389 00000   614          MVC   WORD+1(3),CHAINPTR  * * * * REFERRED TO BY QUESTION 2.  00058900
000352 5810 C382            00388   615          L     R1,WORD             * * * * * * * DITTO. * * * * * * *   00059000
000356 1211                         616          LTR   R1,R1                                                    00059100
000358 4770 C338            0033E   617          BNZ   LOOP                                                     00059200
00035C D202 F000 C387 00000 0038D   618 ENTER    MVC   0(3,R15),NXAVAIL+1  INSERT CHAIN POINTER.                00059300
000362 58F0 C386            0038C   619          L     R15,NXAVAIL                                              00059400
000366 181F                         620          LR    R1,R15                                                   00059500
000368 D20B 1000 2000 00000 00000   621          MVC   DATAITEM(ITEMLEN),0(R2) INSERT THE DATA ITEM IN THE     00059600
00036E D702 1000 1000 00000 00000   622          XC    CHAINPTR(3),CHAINPTR DICTIONARY, AND INDICATE END OF   00059700
000374 41FF 000F            0000F   623          LA    R15,CHAINDLN(R15)   CHAIN. POINT 'NXAVAIL' TO NEXT FREE  00059800
000378 50F0 C386            0038C   624          ST    R15,NXAVAIL         BYTE IN THE TABLE.                   00059900
00037C 1BFF                         625          SR    R15,R15             RETURN CODE = 0, NORNAL RETURN.      00060000
00037E 07FE                         626          BR    R14                                                      00060100
000380 41F0 0004            00004   627 DUPE     LA    R15,4                                                    00060200
000384 07FE                         628          BR    R14                 DUPLICATE, SET ERROR RETURN CODE.    00060300


000386 0000
000388 00000000                     630 WORD     DC    F'0'                &&&&&&&&&&&&&&&&&&&&&&&&&&&&&&&&&&&& 00060500
00038C 000003B8                     631 NXAVAIL  DC    A(CHAINS)           & TABLES, CONSTANTS AND TEST DATA  & 00060600
000390 0000000000000000             632 HASHTAB  DC    10F'0'              & USED BY THE DIRECT STORAGE       & 00060700
                                    633 *        DC    199990F'0'          & ROUTINES (SYNONYM CHAINING        & 00060800
000398 4040404040404040             634 CHAINS   DC    75C' '              & VARIETY). THE TOP 199,990 WORDS   & 00060900
                                    635 *        DC    2925000C' '         & OF THE 'HASHING' TABLE ARE FAKE, & 00061000
000000                              636 CHAINPTR EQU   DATAITEM+ITEMLEN    & BECAUSE I FALL OFF THE END OF    & 00061100
00000F                              637 CHAINDLN EQU   ITEMLEN+3           & MY MACHINE AT 512K, AND, BESIDES & 00061200
0004C3 F4F0F0F0F0F1                 638 SEARCH2  DC    C'400001'           & THAT, YOU'LD GET A HERNIA PACKING& 00061300
0004C9 F8F0F0F0F0F1E6F1             639 ITEM1A   DC    C'800001W12345'     & AROUND A 512K STORAGE DUMP....   & 00061400
000415 F6F0F0F0F0F6C4F3             640 ITEM2A   DC    C'600006D32568'     &&&&&&&&&&&&&&&&&&&&&&&&&&&&&&&&&&&& 00061500
000421 F4F0F0F0F0F1C4F9             641 ITEM3A   DC    C'400001D98765'                                          00061600
00042D 000000
000430 00030D40                     642 F200000  DC    F'200000'                                                00061700
```

```
  LOC  OBJECT CODE    ADDR1 ADDR2  STMT   SOURCE STATEMENT                                                    F08APR70   9/16/70

                                    644 *&&&&&&&&&&&&&&&&&&&&&&&&&&&&&&&&&&&&&&&&&&&&&&&&&&&&&&&&&&&&&&&&&&&&&&&&& 00061900
                                    645 *        THIS CODE TESTS THE CHAINING EXAMPLE. IT ADDS THREE DATA           00062000
                                    646 *        ITEMS, ONE OF WHICH IS A SYNONYM, AND IT RETRIEVES ONE OF          00062100
                                    647 *        THE ITEMS JUST ADDED.                                               00062200
                                    648 *&&&&&&&&&&&&&&&&&&&&&&&&&&&&&&&&&&&&&&&&&&&&&&&&&&&&&&&&&&&&&&&&&&&&&&&&& 00062300
000434                              649 CHAINTST DS    0H                                                            00062400
000434 4110 C403            00409   650          LA    R1,ITEM1A             FIRST ITEM TO BE ADDED.                 00062500
000438 45E0 C30A            00310   651          BAL   R14,HASHIT                                                    00062600
00043C 47FF C43A            00440   652          B     *+4(R15)                                                      00062700
000440 47F0 C440            00446   653          B     *+6                                                           00062800
000444 0007                         654          DC    H'7'                  DUMP IF INSERTION FAILS.                00062900
000446 4110 C40F            00415   655          LA    R1,ITEM2A             SECOND ITEM TO BE ADDED.                00063000
00044A 45E0 C30A            00310   656          BAL   R14,HASHIT                                                    00063100
00044E 47FF C44C            00452   657          B     *+4(R15)                                                      00063200
000452 47F0 C452            00458   658          B     *+6                                                           00063300
000456 0008                         659          DC    H'8'                  DUMP IF INSERTION FAILS.                00063400
000458 4110 C41B            00421   660          LA    R1,ITEM3A             THIRD ITEM TO BE ADDED (SYNONYM).       00063500
00045C 45E0 C30A            00310   661          BAL   R14,HASHIT                                                    00063600
000460 47FF C45E            00464   662          B     *+4(R15)                                                      00063700
000464 47F0 C464            0046A   663          B     *+6                                                           00063800
000468 0009                         664          DC    H'9'                  DUMP IF INSERTION FIALS.                00063900
00046A 4110 C3FD            00403   665          LA    R1,SEARCH2            ITEM TO BE LOCATED                      00064000
00046E 45E0 C30A            00310   666          BAL   R14,HASHIT                                                    00064100
000472 47FF C470            00476   667          B     *+4(R15)                                                      00064200
000476 000A                         668          DC    H'10'                 DUMP IF NOT FOUND                       00064300
000478 0700                         669          NOPR  0                                                             00064400
00047A 0014                         670          DC    H'20'                 TAKE A DUMP JUST TO SEE WHAT THE        00064500
                                    671 *                                    TABLE LOOKS LIKE IN STORAGE....         00064600

                                    673 ************************************************************************ 00064800
                                    674 *                                                                            00064900
                                    675 ***NOTE: THE COMMENTS FIELDS OF THE INSTRUCTIONS REFERRED TO IN THESE        00065000
                                    676 *        QUESTIONS HAVE ASTERISKS ( * )S IN THEM.                            00065100
                                    677 *                                                                            00065200
                                    678 *        ANSWER THE FOLLOWING QUESTIONS CONCERNING THIS CODE AND THE         00065300
                                    679 *        TABLE THAT IT USES (TABLE ON THE PRECEEDING PAGE).                  00065400
                                    680 *                                                                            00065500
                                    681 *        1. WHAT HAPPENS IF I REPLACE THE " MVC    WORD+1(3),CHAINPTR        00065600
                                    682 *           & L R1,WORD  " INSTRUCTIONS WITH "  L   R1,CHAINPTR-1 " ?        00065700
                                    683 *                                                                            00065800
                                    684 *        2. WHAT IS THE REASON FOR ADDING 1 TO REGISTER 15 BEFORE            00065900
                                    685 *           BRANCHING TO "ENTER" ?   * * SEE NOTE ON THE INSTRUCTION.        00066000
                                    686 *                                                                            00066100
                                    687 ************************************************************************ 00066200
```

```
LOC  OBJECT CODE    ADDR1 ADDR2  STMT   SOURCE STATEMENT                                    F08APR70   9/16/70

                                 689 ******************************************************************** 00066400
                                 690 *                                                                    00066500
                                 691 *        ANSWER THESE QUESTIONS ABOUT THE DUMP ON THE NEXT PAGE.     00066600
                                 692 *                                                                    00066700
                                 693 *        1. HOW MANY "CHAINS" ARE THERE CURRENTLY IN "HASHTAB" ?     00066800
                                 694 *                                                                    00066900
                                 695 *        2. HOW MANY DATA ITEMS ARE THERE IN EACH "CHAIN" ?          00067000
                                 696 *                                                                    00067100
                                 697 ******** WHEN YOU FINISH THESE, DISPLAY THE WHITE SIDE OF YOUR       00067200
                                 698 *        "ANSWER CUE".                                               00067300
                                 699 *                                                                    00067400
                                 700 ******************************************************************** 00067500
```

```
F.P. REGS.  00.000000 00000000   00.12C002 0201D970   FF.040001 5000AC16   00.000000 0001D730

REGS 0-7     00000004 C005AE96 0005AEC3 00C00000    00C1AB98 0001B0E8 0001D140 0001BA48
REGS 8-15    0001DCA0 00000000 0001DCC8 00000000    6F05AAC6 0005B204 8F05AF32 00000004

000000    00000000 00000000 00000000 00000000    0005AAC0 00000000 FF040080 A000A93C  *................................*
000020    FFB50003 6F007588 FFB50001 4F05AF3C    0000FF00 00000000 FF060133 80000000  *................................*
000040    00001360 08000000 00001358 00005920    02C03BA4 0000996C 00040000 00007498  *................................*
000060    00040000 00007BC8 00040000 00007588    00000000 00012D10 00040000 0000751A  *.......H........................*

05AAC0    90ECD00C 05C041F0 C73E50FD 000850DF    000418DF D703D008 D00858F0 C78AD201  *.......0G...........P......0G.K.*
05AAE0    F000C022 47F0C024 07FE47F0 C07841F0    C0AAD505 F0001000 4780C054 41F0F00C  *0....0.....0...0..N.0........00.*
05AB00    59F0C122 4740C02C D20BF000 100041F0    F00C50F0 C1221BFF 07FE41F0 000407FE  *.0A.. ..K.0....00..0A......0....*
05AB20    4110C0AA D5051000 C1324780 C0504110    100C5910 C1224740 C05E47F0 C0544110  *....N...A...........A.. ...0....*
05AB40    C12645E0 C02847FF C08447F0 C08A0000    4110C0C2 45E0C028 47FFC096 07000001  *A...........0.......B............*
05AB60    45E0C05A D505C132 10004780 C1380002    F2F6F4F8 F3F3C4F1 F6F0F2F1 F1F5F7F6  *....N.A.....A...264833D160211576*
05AB80    F4F2C4F1 F1F1F0F6 F2F2F5F6 F1F7E6F1    F4F9F4F7 F9F8F5F1 F6F3E6F0 F1F6F2F8  *42D111062256 17W14947985163W01628*
05ABA0    F5F4F1F6 F7F3C4F0 F2F8F2F5 F7F7F1F5    F4F3E6F1 F9F6F6F7 40404040 40404040  *541673D02825771543W19667        *
05ABC0    40404040 40404040 40404040 40404040    40404040 40404040 40404040 40404040  *                                *
05ABE0    40404040 40404040 0005ABB8 F7F7F1F5    F4F3E6F1 F9F6F6F7 F2F2F5F6 F1F747F0  *         ....771543W19667225617.0*
05AC00    C2921BFF 1821F275 C28A1000 4F10C28A    1B005D00 C1821810 89000002 89100003  *B.....2.B.....B.....A...........*
05AC20    1A104111 C194D505 1000C186 4770C172    440FC18C 1BFF07FE 41F00004 07FE41F0  *....A.N...A...A...A......0.....0*
05AC40    000647F0 C1400000 00000014 40404040    4040D20B 10002000 07004040 40404040  *...0A ......      K.......      *
05AC60    40404040 40404040 40404040 40404040    40404040 40404040 40404040 40404040  *                                *
05AC80    40404040 40404040 40404040 40404040    40404040 40404040 40404040 40404040  *                                *
05ACA0    40404040 40404040 40404040 40404040    40404040 40404040 40404040 40404040  *                                *
05ACC0    40404040 40404040 40404040 40404040    40404040 40404040 40404040 4040F1F1  *                              11*
05ACE0    F1F1F1F1 E6F1F1F1 F1F14040 40404040    40404040 40404040 40404040 40404040  *1111W11111                         *
05AD00    40404040 40404040 40404040 40404040    40404040 40404040 4040F1F2 F3F4F5F6  *                            123456*
05AD20    C4F1F2F3 F4F54040 40404040 40404040    40404040 40404040 40404040 40404040  *D12345                            *
05AD40    40404040 40404040 4040C504 00400000    00000000 0400001F 4110C2DC 45E0C13C  *           E.. ............B...A.*
05AD60    47FFC29E 47F0C2A4 00034110 C2E845E0    C13C47FF C2B047F0 C2B60004 4110C2F4  *..B..0B.....BY..A...B..0B.....B4*
05AD80    45E0C13C 47FFC2C2 47F0C2C8 00054110    C30045E0 C178D505 1000C300 4780C306  *..A...BB.0BH....C...A.N...C...C.*
05ADA0    0006F1F1 F1F1F1F1 E6F1F1F1 F1F1F1F2    F3F4F5F6 C4F1F2F3 F4F5F4F4 F4F4F3F1  *..111111W11111123456D12345444431*
05ADC0    C4F4F4F4 F4F4F1F1 F1F1F1F1 47F0C42E    1821F275 C28A1000 4F10C28A 1B005D00  *D44444111111.0D...2.B.....B.....*
05ADE0    C42A8900 000241F0 C38A1AF0 581F0000    12114770 C33841FF 000147F0 C356D5C5  *D......0C..0........C......0C.N.*
05AE00    100C2000 4780C37A 41F0100C D202C383    100C5810 C3821211 4770C338 D202F0C0  *......C..0..K.C.....C.....C.K.0.*
05AE20    C38758F0 C386181F D20B1000 2000D702    100C100C 41FF000F 50F0C386 1BFF07FE  *C..0C...K.....P..........0C.....*
05AE40    41F00004 07FE0000 0005AE96 0005AEA5    00000000 0005AE78 00000000 00000000  *.0...............................*
05AE60    00000000 00000000 0005AE87 00000000    00000000 00000000 F8F0F0F0 F0F1E6F1  *........................800001W1*
05AE80    F2F3F4F5 05AE96F6 F0F0F0F0 F6C4F3F2    F5F6F800 000CF4F0 F0F0F0F1 C4F9F8F7  *2345...600006D32568...400001D987*
05AEA0    F6F50000 00404040 40404040 40404040    40404040 40404040 40404040 40404040  *65...                           *
05AEC0    40404CF4 F0F0F0F0 F1F8F0F0 F0F0F1E6    F1F2F3F4 F5F6F0F0 F0F0F6C4 F3F2F5F6  *   400001800001W12345600C06D3256*
05AEE0    F8F4F0F0 F0F0F1C4 F9F8F7F6 F5000000    00030D40 4110C403 45E0C30A 47FFC43A  *8400001D98765...... ..D...C...D.*
05AF00    47F0C440 00074110 C4CF45E0 C30A47FF    C44C47F0 C4520008 4110C41B 45E0C30A  *.0D ....D...C...D..0D.....D...C.*
05AF20    47FFC45E 47F0C464 00094110 C3FD45E0    C30A47FF C470000A 07000014 4110C78E  *..D..0D.....C...C...D........G.*
05AF40    182148F2 000006F0 4CF0C794 41AFC4AA    48F10002 C6F04CF0 C7961AAF 48F10004  *...2...0.0G...D..1...0.0G....1..*
05AF60    06F01EFF 1AAF481A 0000000B 47F0C612    00440020 FFE7003F 0017FFEF 0034000C  *.0............0F......X.........*
05AF80    FFE00038 0016FFFB 003D001E FFF6003A    000CFFF1 002B000D FFF90038 0010FFDC  *.............6.....1.....9......*
05AFA0    00360018 FFFC003C 001EFFF6 00430025    FFE5003E 0016FFF4 0C33000B FFE10037  *...........6.....V.....4........*
05AFC0    0019FFFB 00290028 FFFC0044 0027FFEC    0041001A FFEF0032 000BFFE0 003B001C  *................................*
05AFE0    FFF90042 0023FFF2 00260020 FFE70049    0019FFEE 0035000D FFDF0039 001BFFF9  *.9.....2.....X................9*
05B000    003C0014 FFF6004E 0025FFE9 003D0015    FFF50035 000EFFDD C0380018 FFFB003D  *.....6.....Z.....5..............*
05B020    0020FFF3 003A002A FFDD0049 001AFFEE    00520020 FFE0004C 0020FFF1 00330014  *...3.......................1....*
05B040    FFEC0041 0023FFE7 00400018 FFF20035    000DFFDF C0340016 FFFE003D 001FFFF5  *.......X. ...2..................5*
05B060    003A002A FFDD0035 002BFFDB 0034002B    FFE00038 C02AFFDD 00330028 FFE20042  *...............................S..*
05B080    0024FFE6 003F001B FFF1003B 000BFFDB    00340016 FFFE003D 0020FFF0 004E000C  *...W.....1..................0....*
05B0A0    FFE70035 0021FFF0 002A0002 FFD90038    0021FFF7 003C0022 FFEF0044 0020FFE5  *.X.....0.....R.....7...........V*
05B0C0    003F0017 FFEF0034 000CFFCC 00380016    FFFB003D 001EFFF6 47F0C64C 18614140  *.......................6.0F.... *
05B0E0    00044150 00604125 C6728850 0001D505    20006000 4780C646 4740C638 13551A25  *........F.....N.......F.. F.....*
```

```
05B100    10554640 C62441F0 000407FE 18121BFF    07FE4110 C67245E0 C61647FF C65847F0  *... F..0............F...F...F..0*
05B120    C65E000C 4110C678 45E0C616 47FFC66A    000D0700 47F0C732 F2F6F4F8 F3F3F5F5  *F.....F...F...F......0G.26483355*
05B140    F5F1F2F1 F0F1F0F4 F3F8E640 40404040    F0F9F8F6 F7F3C440 40404040 F1F2F1F3  *5121010438W      098673D      1213*
05B160    F4F8E640 40404040 F1F4F6F7 F9F2C440    40404040 F2F6F4F8 F3F3C440 40404040  *48W      146792D      264833D      *
05B180    F2F7F6F5 F9F9E640 40404040 F3F3F3F4    F8F2C440 40404040 F4F1F3F7 F3F3E640  *276599W      333482D      413733W *
05B1A0    40404040 F5F5F1F7 F8F3C440 40404040    F5F9F9F4 F5F2E640 40404040 F6F7F8F9  *     551783D      599452W      6789*
05B1C0    F1F2C440 40404040 F7F7F1F5 F3F2C440    40404040 F8F0F0F3 F2F0E640 40404040  *12D      771532D      800320W      *
05B1E0    F8F8F0F9 F3F2C440 40404040 F9F1F0F2    F3F4C440 40404040 58DD00C4 98ECD00C  *880932D      910234D      ........*
05B200    07FE05EF 58F0916A 00066F68 00000000    00C60840 000648E8 000635E0 00061C38  *.....0............. ...Y........*
05B220    0005E5A8 00061C38 00000000 00000000    004590C0 C9C5C6F4 F5F1C940 40404040  *..V.................IEF451I      *
05B240    40404040 4B404040 40404040 404B4040    0005B51E 00010018 000200BA 0006E840  *    .         .  ...............Y *
05B260    90ECD00C 05C004F0 07004110 C0100511    CF05B304 7FFF0A0E 58B00010 9110B074  *.......0........................*

05B820    504C1010 4340A008 12444780 885C4820    A00E5420 8A9E4780 87FC0620 5A20B010  *. ... ........................*
```

```
LOC  OBJECT CODE    ADDR1 ADDR2  STMT   SOURCE STATEMENT                                    F08APR70   9/16/70

                                 702 ***********************************************************************  00067700
                                 703 *                                                                        00067800
                                 704 *        ANSWERS TO THE DIRECT STORAGE ROUTINE (WITH SYNONYMS).          00067900
                                 705 *                                                                        00068000
                                 706 *        1. A "SPECIFICATION" EXCEPTION WOULD OCCUR BECAUSE OF A         00068100
                                 707 *           BOUNDARY ALIGNMENT VIOLATION OF THE LOAD INSTRUCTION.        00068200
                                 708 *                                                                        00068300
                                 709 *        2. TO MAKE THE 'HASHTAB' ENTRY APPEAR THE SAME AS A 3-BYTE      00068400
                                 710 *           CHAIN POINTER TO THE 'ENTER' ROUTINE.                        00068500
                                 711 *                                                                        00068600
                                 712 ***********************************************************************  00068700


                                 714 ***********************************************************************  00068900
                                 715 *                                                                        00069000
                                 716 *        ANSWERS TO THE DUMP FOR THE DIRECT STORAGE ROUTINE.             00069100
                                 717 *                                                                        00069200
                                 718 *        1. THERE ARE CURRENTLY 2 CHAINS.                                00069300
                                 719 *                                                                        00069400
                                 720 *        2. THERE ARE 2 ITEMS IN THE FIRST CHAIN, AND 1 IN THE SECOND.   00069500
                                 721 *                                                                        00069600
                                 722 ***********************************************************************  00069700
```

```
LOC  OBJECT CODE    ADDR1 ADDR2  STMT   SOURCE STATEMENT                                          F08APR70   9/16/70

                                 724 *                        ****************************************       00069900
                                 725 *                        * DIMENSIONED DIRECT STORAGE. (ARRAYS) *       00070000
                                 726 *                        * ----------- ------ -------- -------- *       00070100
                                 727 *                        ****************************************       00070200

                                 729 *+++++++++++++++++++++++++++++++++++++++++++++++++++++++++++++++++++++ 00070400
                                 730 *                                                                      00070500
                                 731 *        THIS ROUTINE EXTRACTS THE TEMPERATURE FROM AN TABLE THAT      00070600
                                 732 *        CONTAINS THE NATIONAL HIGH, AVERAGE, AND LOW TEMPERATURES FOR 00070700
                                 733 *        ANY DAY OF LAST YEAR.                                         00070800
                                 734 *                                                                      00070900
                                 735 *        THE TEMPERATURES ARE BINARY HALF-WORD QUANTITIES IN A THREE-  00071000
                                 736 *        DIMENSIONAL ARRAY, WHICH MAY BE LOGICALLY ILLUSTRATED AS:     00071100
                                 737 *                                                                      00071200
                                 738 *                                  +---HIGH                          00071300
                                 739 *                            +--1ST--+---AVERAGE                     00071400
                                 740 *                            |       +---LOW                          00071500
                                 741 *                            +--2ND..                                00071600
                                 742 *                            +--3RD..                                00071700
                                 743 *                +---JAN.---+--4TH..                                 00071800
                                 744 *                |          +--5TH..                                 00071900
                                 745 *                +---FEB... +  ...                                  00072000
                                 746 *                |          +  ...                                  00072100
                                 747 *                +---MAR... +  ...                                  00072200
                                 748 *     TEMPERTR---+---APR... +  ...  +---HIGH                         00072300
                                 749 *                +---MAY... +-31ST--+---AVERAGE                     00072400
                                 750 *                +---JUN...         +---LOW                         00072500
                                 751 *                +   ...                                            00072600
                                 752 *                +   ...                                            00072700
                                 753 *                +   ...                                            00072800
                                 754 *                +   ...    +--1ST...                               00072900
                                 755 *                +---DEC.---+--2ND...                               00073000
                                 756 *                           +--3RD...                               00073100
                                 757 *                           +  ...                                  00073200
                                 758 *                           +  ...                                  00073300
                                 759 *                           +-31ST...                               00073400
                                 760 *                                                                      00073500
                                 761 *        IN CORE STORAGE, THIS WOULD APPEAR AS:                        00073600
                                 762 *                                                                      00073700
                                 763 *        | HIGH | AVG. | LOW  | HIGH | AVG. | LOW  |.....| AVG. | LOW | 00073800
                                 764 *        +------+------+------+------+------+------+-...-+------+-----+ 00073900
                                 765 *        <----- DAY 1 -------> <---- DAY 2 -------> <-...-- DAY 31 ---> 00074000
                                 766 *        <--------- J A N U A R Y -------------------.....--DECEMBER--> 00074100
                                 767 *        <------------- ' T E M P E R T R ' ---------.........-------> 00074200
                                 768 *        +0                                                  +12X31X3X2 00074300
                                 769 *                                                                      00074400
                                 770 *        ANY ENTRY IN THE TABLE IS REFERENCED AS FOLLOWS;              00074500
                                 771 *        TEMPERATURE(MONTH,DAY,TYPE) WHERE TYPE = HIGH, AVERAGE, OR LOW 00074600
                                 772 *        ACTUALLY, THESE VALUES ARE REPRESENTED NUMERICALLY, SO THAT   00074700
                                 773 *        THE LOW TEMPERATURE FOR SEPTEMBER 29TH IS TEMPERATURE(9,29,3) 00074800
                                 774 *        AND IS LOCATED BY THE FOLLOWING FORMULA:                      00074900
                                 775 *                                                                      00075000
                                 776 *        ADDRESS = 'TEMPERTR' + 186(MONTH-1) + 6(DAY-1) + 2(TYPE-1)    00075100
                                 777 *                                                                      00075200
                                 778 *++++++++++++++++++++++++++++++++++++++++++++++++++++++++++++++++++++++ 00075300
```

ARRAY 3D

```
 ****A1*********                 *****A2**********
*     BEGIN      *               *SUBTRACT 1 FROM*
* 3-DIMENSIONAL * ------->*      *   MONTH AND   *
* ARRAY ROUTINE *         *      *   MULTIPLY BY *
 ***************          *      *     186.      *
                          *                      *
                          ******************
                                    |
                                    |
                                    |
                                    V
                          *****B2**********
                          *                *
                          *  ADD IN THE    *
                          *ADDRESS OF THE  *
                          *     APRAY.     *
                          *                *
                          ******************
                                    |
                                    |
                                    |
                                    V
                          *****C2**********
                          *                *
                          *SUBTRACT 1 FROM*
                          *    DAY AND     *
                          *MULITPLY BY 6.  *
                          *                *
                          ******************
                                    |
                                    |
                                    |
                                    V
                          *****D2**********
                          *                *
                          *SUBTRACT 1 FROM*
                          *   TYPE AND     *
                          *MULTIPLY BY 2.  *
                          *                *
                          ******************
                                    |
                                    |
                                    |
                                    V
                           ****E2*********
                          * RETURN, PASS   *
                          *     BACK       *
                          *  TEMPERATURE   *
                           ***************
```

```
LOC   OBJECT CODE    ADDR1 ADDR2  STMT   SOURCE STATEMENT                                                F08APR70   9/16/70
                                  789 *================================================================== 00076400
                                  790 *                                                                   00076500
                                  791 *        NOTICE THE PARAMETERS BELOW FOR THE AVERAGE TEMPERATURE FOR  00076600
                                  792 *        JAN. 24TH. THEY ARE CONTAINED IN A LIST OF THREE HALFWORDS   00076700
                                  793 *        REPRESENTING MONTH, DAY, AND TEMPERATURE TYPE, RESPECTIVELY. 00076800
                                  794 *                                                                   00076900
                                  795 *================================================================== 00077000

00047C 4110 C78E            00794  797          LA    R1,=H'1,24,2'       AVERAGE TEMPERATURE FOR JAN. 24TH.  00077200

000480 1821                        799 ARRAY3D  LR    R2,R1                                                   00077400
000482 48F2 0000            00000  800          LH    R15,0(R2)           GET MONTH NUMBER                    00077500
000486 06F0                        801          BCTR  R15,0                                                   00077600
000488 4CF0 C794            C079A  802          MH    R15,=H'186'                                             00077700
00048C 41AF C4AA            004B0  803          LA    R10,TEMPERTR(R15)   FIRST DIMENSION                     00077800
000490 48F1 0002            00002  804          LH    R15,2(R1)           GET DAY OF MONTH                    00077900
000494 06F0                        805          BCTR  R15,0                                                   00078000
000496 4CF0 C796            0079C  806          MH    R15,=H'6'                                               00078100
00049A 1AAF                        807          AR    R10,R15             ADD SECOND DIMENSION                00078200
00049C 48F1 0004            00004  808          LH    R15,4(R1)           GET TEMPERATURE TYPE                00078300
0004A0 06F0                        809          BCTR  R15,0                                                   00078400
0004A2 1EFF                        810          ALR   R15,R15                                                 00078500
0004A4 1AAF                        811          AR    R10,R15             ADD THIRD DIMENSION                 00078600
0004A6 481A 0000            00000  812          LH    R1,0(R10)           PICK UP DATE'S REQUESTED TEMPERATURE 00078700
0004AA 000B                        813          DC    H'11'               TAKE A DUMP                         00078800
                                   814 *        BR    R14                 RETURN                              00078900
0004AC 47F0 C612            00618  815          B     ARRAYOK                                                 00079000
0004B0 00440020FFE7003F            816 TEMPERTR DC    H'68,32,-25,63,23,-17,52,12,-32,56,22,-05,61,30,-10'  00079100
                                   817          PRINT OFF  <-- I DID THIS JUST TO MAKE YOU LOOK IN THE DUMP  00079200
                                   830 *                                 TO FIND YOUR ANSWERS.               00080500
                                   831 *                                 ( I HAVEN'T BEEN A PRACTICING FINK  00080600
                                   832 *                                 MOST OF MY LIFE FOR NOTHING....)    00080700
                                   833 *                                                                   00080800
                                   834 **NOTE ** ONLY THE FIRST TWO MONTH'S DATA IS ACTUALLY IN THE PROGRAM, 00080900
                                   835 *********THE REST OF THE TABLE HAS BEEN LEFT OUT TO CONSERVE SPACE.  00081000

                                   837 ****************************************************************** 00081200
                                   838 *                                                                   00081300
                                   839 *        USING THE CODE ABOVE AND THE DUMP THAT FOLLOWS, ANSWER THESE. 00081400
                                   840 *                                                                   00081500
                                   841 *        1. WHAT WOULD THE PARAMETERS LOOK LIKE IF YOU WERE TO TRY TO 00081600
                                   842 *           FIND THE HIGH TEMPERATURE FOR AUGUST 23RD ??            00081700
                                   843 *                                                                   00081800
                                   844 *        2. USING THE ADDRESS OF 'TEMPERTR' FROM THE DUMP, AT WHAT   00081900
                                   845 *           STORAGE ADDRESS WOULD YOU FIND THAT HIGH TEMPERATURE FOR 00082000
                                   846 *           AUGUST 23RD ??                                          00082100
                                   847 *                                                                   00082200
                                   848 *        3. WHAT WAS THE AVERAGE TEMPERATURE FOR FEBRUARY 12TH ????  00082300
                                   849 *                                                                   00082400
                                   850 ******** WHEN YOU HAVE ANSWERED THESE, DISPLAY THE GREEN SIDE OF THE 00082500
                                   851 *        "ANSWER CUE".                                              00082600
                                   852 ****************************************************************** 00082700
00061B                             853 ARRAYOK  EQU   *                                                    00082800
```

```
F.P. REGS.  00.000000 00000000   00.12C002 0201D970   FF.040001 5000AC16   00.000000 0001D730

REGS 0-7     00000004 0000001B 0005B254 00000000    0001AB98 0001B0E8 0001D14C 0001BA48
REGS 8-15    0001D0A0 00000000 0005AFFC 00000000    6F05AAC6 0005B204 8F05AF32 00000002

000000    00000000 00000000 00000000 00000000    0005AAC0 00000000 FF040080 A00CA93C  *................................*
000020    FFB50003 6F0C7588 FFB50001 6F05AF6C    0000FF00 000C0000 FF050133 800248F8  *................................8*
000040    0C0C1360 08000000 00001358 0C005920    083C7000 0000996C 00040000 00007498  *................................*
000060    00040000 00007BC8 00040000 00007588    00000000 00012D10 00040000 0000751A  *.......H........................*

05AAC0    90ECD00C 05C041F0 C73E50FD 000850DF    000418DF D703D008 D00858F0 C78AD201  *.......0G...........P......0G.K.*
05AAE0    F000C022 47F0C024 07FE47F0 C07841F0    C0AAD505 F0001000 4780C054 41F0F00C  *0....C.....0...0..N.0........C0.*
05AB00    59F0C122 4740C02C D20BF000 100041F0    F00C50F0 C1221BFF 07FE41F0 000407FE  *.0A.. ..K.0....00..0A......C....*
05AB20    4110C0AA D5051000 C1324780 C0504110    100C5910 C1224740 C05E47F0 C0544110  *....N...A...........A.. ...0....*
05AB40    C12645EC C02847FF C08447F0 C08A0000    4110C0C2 45ECC028 47FFC096 07000001  *A..........0.......B............*
05AB60    45E0C05A D505C132 1C004780 C1380002    F2F6F4F8 F3F3C4F1 F6F0F2F1 F1F5F7F6  *....N.A.....A...264833D160211576*
05AB80    F4F2C4F1 F1F1F0F6 F2F2F5F6 F1F7E6F1    F4F9F4F7 F9F8F5F1 F6F3E6F0 F1F6F2F8  *42D111062256 17W14947985163W01628*
05ABA0    F5F4F1F6 F7F3C4F0 F2F8F2F5 F7F7F1F5    F4F3E6F1 F9F6F6F7 40404040 40404040  *541673D02825771543W19667        *
05ABC0    40404040 40404040 40404040 40404040    40404040 40404040 40404040 40404040  *                                *
05ABE0    40404040 40404040 0005ABB8 F7F7F1F5    F4F3E6F1 F9F6F6F7 F2F2F5F6 F1F747F0  *         ....771543W19667225617.0*
05AC00    C2921BFF 1821F275 C28A1000 4F10C28A    1B005D00 C1821810 89000002 89100003  *B.....2.B.....B.....A...........*
05AC20    1A104111 C194D505 1000C186 4770C172    440FC18C 1BFF07FE 41F00004 07FE41F0  *....A.N...A...A...A......0.....0*
05AC40    000647F0 C1400000 00000014 40404040    404CD20B 10002000 07004040 40404040  *...0A ......       K.......     *
05AC60    40404040 40404040 40404040 40404040    40404040 40404040 40404040 40404040  *                                *
05AC80    40404040 40404040 40404040 40404040    40404040 40404040 40404040 40404040  *                                *
05ACA0    40404040 40404040 40404040 40404040    40404040 40404040 40404040 40404040  *                                *
05ACC0    40404040 40404040 40404040 40404040    40404040 40404040 40404040 4040F1F1  *                              11*
05ACE0    F1F1F1F1 E6F1F1F1 F1F14040 40404040    40404040 40404040 40404040 40404040  *1111W11111                        *
05AD00    40404040 40404040 40404040 40404040    40404040 40404040 4040F1F2 F3F4F5F6  *                           123456*
05AD20    C4F1F2F3 F4F54040 40404040 40404040    40404040 40404040 40404040 40404040  *D12345                            *
05AD40    40404040 40404040 4040C504 00400000    00000000 0400001F 4110C2DC 45E0C13C  *           E.. ............B...A.*
05AD60    47FFC29E 47F0C2A4 00034110 C2E845E0    C13C47FF C2B047F0 C2B60004 4110C2F4  *..B..0B.....BY..A...B..0B.....B4*
05AD80    45E0C13C 47FFC2C2 47F0C2C8 00054110    C30045E0 C178D505 1000C300 4780C306  *..A...BB.0BH....C...A.N...C...C.*
05DA0     0006F1F1 F1F1F1F1 E6F1F1F1 F1F1F1F2    F3F4F5F6 C4F1F2F3 F4F5F4F4 F4F4F3F1  *..111111W111111123456D12345444431*
05ADC0    C4F4F4F4 F4F4F1F1 F1F1F1F1 47F0C42E    1821F275 C28A1000 4F10C28A 1B005D00  *D44444111111.0D...2.B.....B.....*
05ADE0    C42A8900 000241F0 C38A1AF0 581F0000    12114770 C33841FF 000147F0 C356D505  *D......0C..0........C......0C.N.*
05AE00    10002000 4780C37A 41F0100C D202C383    100C5810 C3821211 4770C338 D202F000  *......C..0..K.C.....C.....C.K.0.*
05AE20    C38758FC C386181F D20B1000 2000D7C2    100C100C 41FF000F 50F0C386 1BFF07FE  *C..0C...K.....P...........CC.....*
05AE40    41F0C004 07FE0000 0005AE96 0005AEA5    00000000 0005AE78 00000000 00000000  *.0...............................*
05AE6C    00000000 00000000 0005AE87 00000000    00000000 00000000 F8F0F0F0 F0F1E6F1  *.............................800001W1*
05AE80    F2F3F4F5 05AE96F6 F0F0F0F0 F6C4F3F2    F5F6F800 0000F4F0 F0F0F0F1 C4F9F8F7  *2345...600006D32568...400001D987*
05AEA0    F6F50000 00404040 40404040 40404040    40404040 40404040 40404040 40404040  *65...                           *
05AEC0    40404040 F0F0F0F0 F1F8F0F0 F0F0F1E6    F1F2F3F4 F5F6F0F0 F0F0F6C4 F3F2F5F6  *   400001800001W12345600006D3256*
05AEE0    F8F4F0F0 F0F0F1C4 F9F8F7F6 F5000000    00030D40 4110C403 45E0C30A 47FFC43A  *8400001D98765...... ..D...C...D.*
05AF00    47FCC440 00074110 C40F45E0 C30A47FF    C44C47F0 C4520008 4110C41B 45E0C30A  *.0D ....D...C...D..0D.....D...C.*
05AF20    47FFC45E 47F0C464 00094110 C3FD45E0    C30A47FF C470000A 07000014 4110C78E  *..D..0D.....C...C...D........G.*
05AF40    182148F2 000006F0 4CF0C794 41AFC4AA    48F10002 06F04CF0 C7961AAF 48F10004  *...2...0.0G...D..1...0.0G....1..*
05AF60    06F01EFF 1AAF481A 0000000B 47F0C612    00440020 FFE7003F 0017FFEF 003400CC  *.0............0F......X.........*
05AF80    FFEC0038 0016FFFB 003D001E FFF6003A    000CFFF1 002B000D FFF90038 001CFFDC  *.............6.....1.....9......*
05AFA0    00360018 FFFC003C 001EFFF6 00430025    FFE5003E 0016FFF4 0033000B FFE10037  *...........6.....V.....4........*
05AFC0    0019FFFB 00290028 FFFC0044 0027FFEC    0041001A FFEF0032 000BFFE0 003B001C  *................................*
05AFE0    FFF90042 0023FFF2 00260020 FFE70049    0019FFEE 0035000D FFDF0039 001BFFF9  *.9.....2.....X..................9*
05B000    003C0014 FFF6004E 0025FFE9 003D0015    FFF50035 000EFFDD 00380018 FFFB003D  *.....6.....Z.....5..............*
05B020    0020FFF3 003A002A FFDD0049 001AFFEE    00520020 FFE0004C 0020FFF1 00330014  *...3.......................1....*
05B040    FFEC0041 0023FFE7 00400018 FFF20035    000DFFDF 00340016 FFFE003D 001FFFF5  *.......X. ...2..................5*
05B060    003A002A FFDD0035 002BFFDB 0034002B    FFE00038 002AFFDD 00330028 FFE20042  *.......................S..*
05B080    0024FFE6 003F001B FFF1003B 000BFFDB    00340016 FFFE003D 0020FFFC 004E000C  *...W.....1....................0....*
05B0A0    FFE70035 0021FFFC 002A0002 FFD90038    0021FFF7 003C0022 FFEF0044 0020FFE5  *.X.....0.....R.....7...........V*
05BCC0    003F0017 FFEF0034 000CFFCC 00380016    FFFB003D 001EFFF6 47F0C64C 18614140  *.......................6.0F.... *
05B0E0    00044150 C0604125 C6728850 0001D505    20006000 4780C646 4740C638 13551A25  *........F.....N.......F.. F.....*
```

```
05B10C    1055464C C62441F0 000407FE 18121BFF    07FE4110 C67245E0 C61647FF C65847F0  *... F..0............F...F...F..0*
05B120    C65E000C 4110C678 45E0C616 47FFC66A    000D0700 47F0C732 F2F6F4F8 F3F3F5F5  *F.....F...F...F......0G.26483355*
05B140    F5F1F2F1 F0F1F0F4 F3F8E640 40404040    F0F9F8F6 F7F3C440 40404040 F1F2F1F3  *5121010438W      098673D      1213*
05B160    F4F8E640 40404040 F1F4F6F7 F9F2C440    40404040 F2F6F4F8 F3F3C440 40404040  *48W      146792D      264833D      *
05B180    F2F7F6F5 F9F9E640 40404040 F3F3F3F4    F8F2C440 40404040 F4F1F3F7 F3F3E640  *276599W      333482D      413733W *
05B1A0    40404040 F5F5F1F7 F8F3C440 40404040    F5F9F9F4 F5F2E640 40404040 F6F7F8F9  *     551783D      599452W      6789*
05B1C0    F1F2C440 40404040 F7F7F1F5 F3F2C440    40404040 F8F0F0F3 F2F0E640 40404040  *12D      771532D      800320W      *
05B1E0    F8F8F0F9 F3F2C440 40404040 F9F1F0F2    F3F4C440 40404040 58DD0004 98ECD00C  *880932D      910234D      ........*
05B200    07FE05EF 58F0916A 00066F68 00000000    00060840 000648E8 000635E0 00061C38  *.....0............. ...Y........*
05B220    0005E5A8 00061C38 00000000 00000000    00459000 C9C5C6F4 F5F1C940 40404040  *..V................IEF451I      *
05B240    40404040 4B404040 40404040 404B4040    0005B51E 00010018 000200BA 0006E840  *    .         .  ...............Y *
05B260    90ECD00C 05C004F0 07004110 C0100511    0F05B304 7FFF0A0E 58B00010 9110B074  *.......0........................*

05B820    50401010 4340A008 12444780 885C4820    A00E5420 8A9E4780 87FC0620 5A20B010  *. ... ........................*
```



**********

```
LOC  OBJECT CODE    ADDR1 ADDR2  STMT   SOURCE STATEMENT                                    F08APR70   9/16/70
                                 855 ***********************************************************************  00083000
                                 856 *                                                                        00083100
                                 857 *        ANSWERS FOR THE THREE-DIMENSIONAL ARRAY PROCESSING ROUTINE.     00083200
                                 858 *                                                                        00083300
                                 859 *        1. THE PARAMETERS FOR THE HIGH FOR AUG. 23 WOULD LOOK LIKE:     00083400
                                 860 *           DC     H'8,23,1'                                             00083500
                                 861 *                                                                        00083600
                                 862 *        2. THAT WOULD BE FOUND AT X'05B70A' OR 'TEMPERTR'+X'059A'.      00083700
                                 863 *                                                                        00083800
                                 864 *        3. THE AVERAVE TEMPERATURE FOR FEB. 12 WAS X'002B' OR 43        00083900
                                 865 *           DEGREES.                                                     00084000
                                 866 *                                                                        00084100
                                 867 ***********************************************************************  00084200
```

5AAC6 BASE Rc
4AA DISP
5A570
~~059A~~
5B50A

[redacted] . 5B06E is location for Q.3.

```
LOC  OBJECT CODE    ADDR1 ADDR2  STMT   SOURCE STATEMENT                                   F08APR70   9/16/70

                                 869 *                          ********************                    00084400
                                 870 *                          * BINARY SEARCHES. *                    00084500
                                 871 *                          * ------ --------- *                    00084600
                                 872 *                          ********************                    00084700


                                 874 *+++++++++++++++++++++++++++++++++++++++++++++++++++++++++++++++++ 00084900
                                 875 *                                                                  00085000
                                 876 *        LET US LOOK AT ANOTHER FAST SEARCHING TECHNIQUE WHICH REDUCES  00085100
                                 877 *        THE NECESSARY NUMBER OF COMPARISONS TO FIND A DATA ITEM. THIS  00085200
                                 878 *        PARTICULAR SEARCHING TECHNIQUE, CALLED 'BINARY SEARCH'         00085300
                                 879 *        RELIES UPON THE DATA ITEMS IN THE TABLE BEING IN ASCENDING OR  00085400
                                 880 *        DESCENDING ORDER BY THEIR ARGUMENTS (KEYS).                    00085500
                                 881 *                                                                  00085600
                                 882 *        THE PRINCIPLE USED IS THIS:                                    00085700
                                 883 *                                                                  00085800
                                 884 *        IN AN ORDERED (SORTED) TABLE, WHEN A COMPARISON OF SEARCH      00085900
                                 885 *        ARGUMENT TO TABLE ARGUMENT IS MADE, THE DIRECTION OF SEARCH    00086000
                                 886 *        FOR THE NEXT COMPARISON IS ESTABLISHED BY THE RESULT OF THE    00086100
                                 887 *        COMPARISON. THAT IS TO SAY THAT IF I COMPARE TWO ITEMS AND     00086200
                                 888 *        FIND THAT THE SEARCH ARGUMENT IS LOWER THAN THE TABLE          00086300
                                 889 *        ARGUMENT, THEN THE ITEM THAT I'M SEARCHING FOR (IF IT EXISTS)  00086400
                                 890 *        EXISTS AT A LOWER ADDRESS IN THE TABLE THAN WHERE I AM NOW     00086500
                                 891 *        LOOKING. VISUALLY, IT LOOKS LIKE THIS:                         00086600
                                 892 *                                                                  00086700
                                 893 *                                          'SORTED' (ASCENDING TABLE) 00086800
                                 894 *        A  (COMPARE IS                    +-------+----------------+ 00086900
                                 895 *        |   HIGH, ITEM            'D'+----->|LOWEST |                | 00087000
                                 896 *        |   MUST BE                     |   +-------+----------------+ 00087100
                                 897 *        |   LOWER IN        'B'+---->+----->|LOW    |                | 00087200
                                 898 *        |   THE TABLE.)           |     |   +-------+----------------+ 00087300
                                 899 *        |                         |  'E'+----->|MEANER |                | 00087400
                                 900 *        +                         |   +-------+----------------+ 00087500
                                 901 *        START HERE ----------->+----------->|MEANEST|                | 00087600
                                 902 *        +                   'A'|   +-------+----------------+ 00087700
                                 903 *        |                         |  'F'+----->|MEANER |                | 00087800
                                 904 *        |  (COMPARE IS            |     |   +-------+----------------+ 00087900
                                 905 *        |   LOW, ITEM       'C'+---->+----->|HIGH   |                | 00088000
                                 906 *        |   MUST BE                     |   +-------+----------------+ 00088100
                                 907 *        |   HIGHER IN             'G'+----->|HIGHEST|                | 00088200
                                 908 *        V   THE TABLE.)                   +-------+----------------+ 00088300
                                 909 *                                          'SORTEDND' (TOP OF TABLE)  00088400
                                 910 *                                                                  00088500
                                 911 *        THE LETTERS IN THE DIAGRAM MAY BE USED TO FOLLOW THE LOGIC     00088600
                                 912 *        OF THE SEARCH. WHEN SEARCHING, WE COMPARE FIRST AT 'A', IF     00088700
                                 913 *        THE SEARCH ARGUMENT IS LOWER THAN THE TABLE ARGUMENT, THEN     00088800
                                 914 *        THE NEXT COMPARE IS AT 'B'; IF THE SEARCH ARGUMENT WAS         00088900
                                 915 *        HIGHER, THEN THE SECOND COMPARE WOULD HAVE BEEN AT 'C'. ETC.   00089000
                                 916 *                                                                  00089100
                                 917 *+++++++++++++++++++++++++++++++++++++++++++++++++++++++++++++++++ 00089200
```

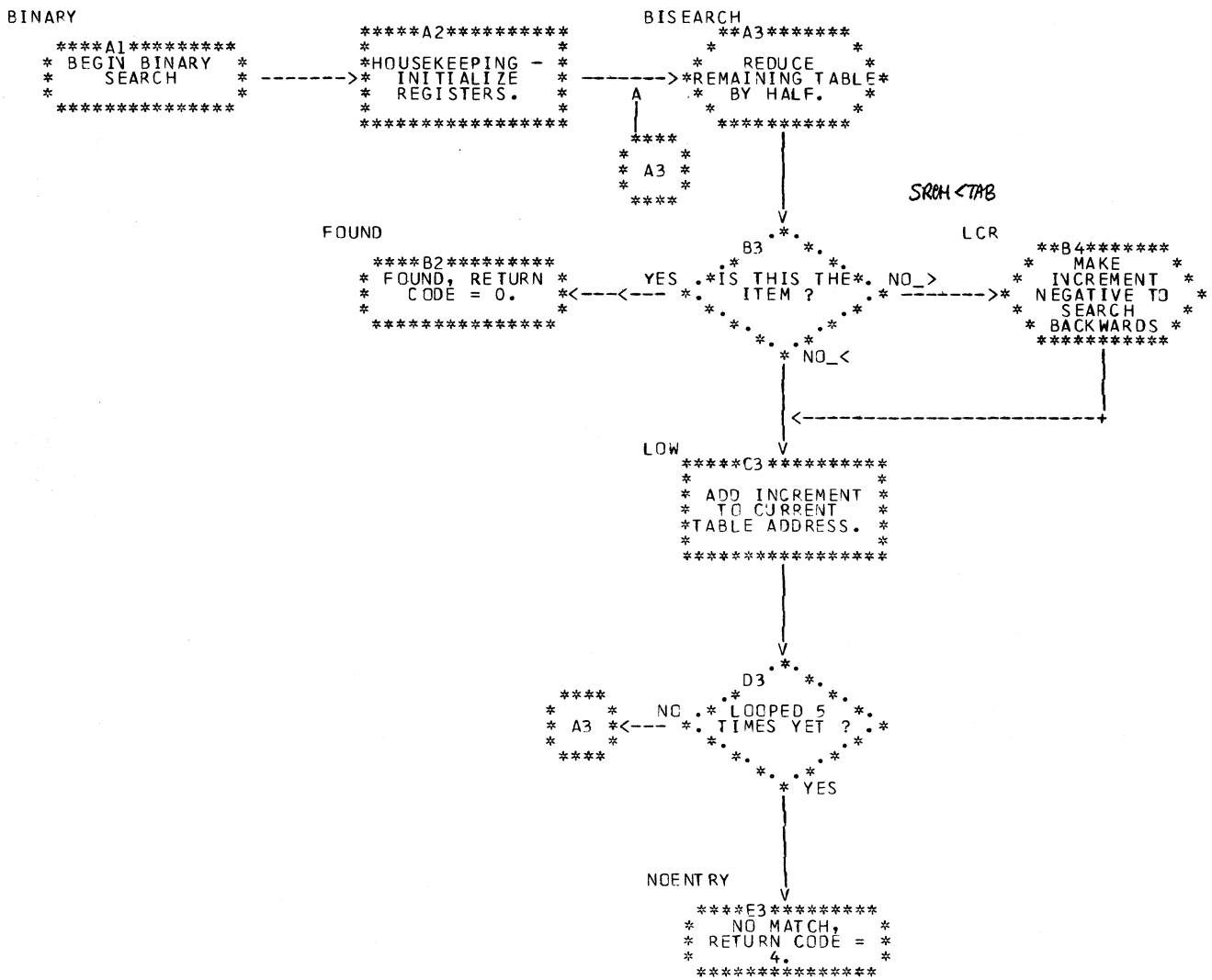
BINARY
A1
BEGIN BINARY SEARCH
A2
HOUSEKEEPING - INITIALIZE REGISTERS.
BISEARCH
A3
REDUCE REMAINING TABLE BY HALF.
A
A3
SRCH<TAB
FOUND
B2
FOUND, RETURN CODE = 0.
YES
B3
IS THIS THE ITEM ?
NO_>
LCR
B4
MAKE INCREMENT NEGATIVE TO SEARCH BACKWARDS
NO_<
LOW
C3
ADD INCREMENT TO CURRENT TABLE ADDRESS.
D3
NO
LOOPED 5 TIMES YET ?
A3
YES
NOENTRY
E3
NO MATCH, RETURN CODE = 4.

```
  LOC  OBJECT CODE    ADDR1 ADDR2  STMT   SOURCE STATEMENT                                            F08APR70   9/16/70
                                    931          DROP  R1                                                       00090600
000000                              932          USING DATAITEM,R2                                              00090700
000618 47F0 C64C            00652   933          B     BYBINARY                                                 00090800

00061C                              935 BINARY   EQU   *                                                        00091000
00061C 1861                         936          LR    R6,R1                                                    00091100
00061E 4140 0004            00004   937          LA    R4,4                LOOP COUNT.                          00091200
000622 4150 0060            00060   938          LA    R5,96               INCREMENT                            00091300
000626 4125 C672            00678   939          LA    R2,SORTED-12(R5)    INITIAL COMPARISON (MID-POINT).      00091400
00062A 8850 0001            00001   940 BISEARCH SRL   R5,1                HALF LENGTH OF INCREMENT.            00091500
00062E D505 2000 6000 00000 00000   941          CLC   MANNUMBR,MANNUMBR-DATAITEM(R6) IS THIS THE ITEM ?        00091600
000634 4780 C646            0064C   942          BE    FOUND               YES, RETURN.                         00091700
000638 4740 C638            0063E   943          BL    LOW                 NO, SEARCH BACKWARDS IN TABLE.       00091800
00063C 1355                         944 LCR      LCR   R5,R5               * * * * REFERRED TO IN QUESTION 4.   00091900
00063E 1A25                         945 LOW      AR    R2,R5               GENERATE NEXT COMPARE ADDRESS.       00092000
000640 1055                         946          LPR   R5,R5                                                    00092100
000642 4640 C624            0062A   947          BCT   R4,BISEARCH         CONTINUE SEARCHING.                  00092200
000646 41F0 0004            00004   948 NOENTRY  LA    R15,4               ENTRY NOT IN TABLE, ERROR RETURN.    00092300
00064A 07FE                         949          BR    R14                                                      00092400
00064C 1812                         950 FOUND    LR    R1,R2                                                    00092500
00064E 1BFF                         951          SR    R15,R15                                                  00092600
000650 07FE                         952          BR    R14                                                      00092700


                                    954 *&&&&&&&&&&&&&&&&&&&&&&&&&&&&&&&&&&&&&&&&&&&&&&&&&&&&&&&&&&&&&&&&&&&&&&& 00092900
                                    955 *        THIS CODE TESTS THE BINARY SEARCH ROUTINE ON THE PRECEEDING    00093000
                                    956 *        PAGE. IT TRIES TO LOCATE TWO ITEMS, ONE OF WHICH IS IN THE     00093100
                                    957 *        TABLE, THE OTHER OF WHICH IS NOT IN THE TABLE.                 00093200
                                    958 *&&&&&&&&&&&&&&&&&&&&&&&&&&&&&&&&&&&&&&&&&&&&&&&&&&&&&&&&&&&&&&&&&&&&&&& 00093300
000652 4110 C672            00678   959 BYBINARY LA    R1,BINARY1         ADDR. OF ARGUMENT TO LOCATE.          00093400
000656 45E0 C616            0061C   960          BAL   R14,BINARY                                               00093500
00065A 47FF C658            0065E   961          B     *+4(R15)                                                 00093600
00065E 47F0 C65E            00664   962          B     *+6                                                      00093700
000662 000C                         963          DC    H'12'              DUMP IF NOT FOUND.                    00093800
000664 4110 C678            0067E   964          LA    R1,NOTINTAB        ADDR OF ARGUMENT WHICH IS NOT IN THE  00093900
000668 45E0 C616            0061C   965          BAL   R14,BINARY          TABLE.                               00094000
00066C 47FF C66A            00670   966          B     *+4(R15)                                                 00094100
000670 000D                         967          DC    H'13'              TAKE A DUMP IF IT THINKS IT FOUND IT. 00094200
000672 0700                         968          NOPR  0                                                        00094300
000674 47F0 C732            00738   969          B     BINARYOK                                                 00094400
```

```
  LOC  OBJECT CODE    ADDR1 ADDR2  STMT   SOURCE STATEMENT                                        F08APR70   9/16/70

000678 F2F6F4F8F3F3                 971 BINARY1  DC    C'264833'                 &&&&&&&&&&&&&&&&&&&&&&&&&&&&&&&&&&&&& 00094600
C0067E F5F5F5F1F2F1                 972 NOTINTAB DC    C'555121'                 & THIS IS THE TEST DATA AND THE     & 00094700
C00684 F0F1F0F4F3F8E640             973 SORTED   DC    CL12'010438W'1   0-11     & BINARY TABLE USED BY THE BINARY   & 00094800
000690 F0F9F8F6F7F3C440             974          DC    CL12'098673D'2   12-23    & SEARCH ROUTINE ON THIS AND THE    & 00094900
C0069C F1F2F1F3F4F8E640             975          DC    CL12'121348W'3   24       & PREVIOUS PAGE...                  & 00095000
C006A8 F1F4F6F7F9F2C440             976          DC    CL12'146792D'4   36       &&&&&&&&&&&&&&&&&&&&&&&&&&&&&&&&&&&&& 00095100
0006B4 F2F6F4F8F3F3C440             977          DC    CL12'264833D'5   48                                             00095200
0C06C0 F2F7F6F5F9F9E640             978          DC    CL12'276599W'6   60                                             00095300
0006CC F3F3F3F4F8F2C440             979          DC    CL12'333482D'7   72                                             00095400
0006D8 F4F1F3F7F3F3E640             980        M DC    CL12'413733W'8   84                                             00095500
C006E4 F5F5F1F7F8F3C440             981          DC    CL12'551783D'9   96                                             00095600
0006F0 F5F9F9F4F5F2E640             982          DC    CL12'599452W'10                                                 00095700
0006FC F6F7F8F9F1F2C440             983          DC    CL12'678912D'11                                                 00095800
000708 F7F7F1F5F3F2C440             984          DC    CL12'771532D'12                                                 00095900
000714 F8FC F0F3F2F0E640            985          DC    CL12'800320W'13                                                 00096000
000720 F8F8F0F9F3F2C440             986          DC    CL12'880932D'14                                                 00096100
00072C F9F1F0F2F3F4C440             987          DC    CL12'910234D'15                                                 00096200
000738                              988 SORTEDND EQU   *                                                               00096300
000738                              989 BINARYOK DS    0H                                                              00096400

                                    991 ******************************************************************************* 00096600
                                    992 *                                                                             00096700
                                    993 *          ANSWER THESE QUESTIONS ABOUT THE CODE AND BINARY TABLE             00096800
                                    994 *          ON THE PRECEEDING PAGES.                                           00096900
                                    995 *                                                                             00097000
                                    996 *          1. HOW MANY COMPARISONS MUST BE MADE TO LOCATE MAN # 098673 ?      00097100
                                    997 *                                                                             00097200
                                    998 *          2. WHAT IS THE MAXIMUM NUMBER OF COMPARISONS THAT WOULD BE         00097300
                                    999 *             MADE TO FIND ANY ENTRY IN THE TABLE ??                          00097400
                                   1000 *                                                                             00097500
                                   1001 *          3. WHAT WOULD BE THE ADDRESS IN REGISTER 2 THE THIRD TIME          00097600
                                   1002 *             THAT WE EXECUTED 'BISEARCH', IF WE WERE SEARCHING FOR           00097700
                                   1003 *             MAN NUMBER 800320 ??                                            00097800
                                   1004 *                                                                             00097900
                                   1005 *          4. HOW MANY TIMES WILL WE EXECUTE THE 'LCR' INSTRUCTION WHEN       00098000
                                   1006 *             SEARCHING FOR MAN NUMBER 264833 ??                              00098100
                                   1007 *                                                                             00098200
                                   1008 ******** WHEN YOU HAVE REACHED THIS POINT, DISPLAY THE YELLOW SIDE OF          00098300
                                   1009 *          YOUR "ANSWER CUE".                                                 00098400
                                   1010 *                                                                             00098500
                                   1011 ******************************************************************************* 00098600
```

```
LOC  OBJECT CODE    ADDR1 ADDR2  STMT   SOURCE STATEMENT                                    F08APR70   9/16/70

                                 1013 ***********************************************************************  00098800
                                 1014 *                                                                        00098900
                                 1015 *        ANSWERS FOR THE BINARY SEARCH ROUTINE.                          00099000
                                 1016 *                                                                        00099100
                                 1017 *        1. THERE WOULD BE THREE COMPARISONS MADE.                       00099200
                                 1018 *                                                                        00099300
                                 1019 *        2. NO MORE THAN FOUR COMPARISONS.                               00099400
                                 1020 *                                                                        00099500
                                 1021 *        3. 'SORTED'+X'9C' OR X'05B3E0'.                                 00099600
                                 1022 *                                                                        00099700
                                 1023 *        4. THE 'LCR' WILL BE EXECUTED TWICE.                            00099800
                                 1024 *                                                                        00099900
                                 1025 ***********************************************************************  00100000


000738 58DD 0004            00004 1027          L     R13,4(R13)                                              00100200
00073C 98EC D00C            0000C 1028          LM    R14,R12,12(R13)                                         00100300
000740 07FE                       1029          BR    R14                                                     00100400
000744                            1030 SAVEAREA DS    18F                                                     00100500
                                  1031          END                                                           00100600
000790 00000000                   1032                =V(PCHKRETN)
000794 000100180002               1033                =H'1,24,2'
00079A 00BA                       1034                =H'186'
00079C 0006                       1035                =H'6'
```

| POS.ID | REL.ID | FLAGS | ADDRESS |
|---|---|---|---|
| 01 | 01 | 0C | 000128 |
| 01 | 01 | 0C | 00038C |
| 01 | 02 | 1C | 000790 |

9/16/70

| SYMBOL | LEN | VALUE | DEFN | REFERENCES | | | | | | | | | | |
|---|---|---|---|---|---|---|---|---|---|---|---|---|---|---|
| ADSERIAL | 00012 | 000120 | 00196 | 0174 | | | | | | | | | | |
| ALRDYIN | 00004 | 000178 | 00380 | 0376 | | | | | | | | | | |
| AREANMBR | 00002 | 000007 | 00083 | | | | | | | | | | | |
| ARRAYOK | 00001 | 000618 | 00853 | 0815 | | | | | | | | | | |
| ARRAY3D | 00002 | 000480 | 00799 | | | | | | | | | | | |
| BINARY | 00001 | 00061C | 00935 | 0960 | 0965 | | | | | | | | | |
| BINARYOK | 00002 | 000738 | 00989 | 0969 | | | | | | | | | | |
| BINARY1 | 00006 | 000678 | 00971 | 0959 | | | | | | | | | | |
| BISEARCH | 00004 | 00062A | 00940 | 0947 | | | | | | | | | | |
| BLANKS | 00001 | 00018C | 00391 | 0375 | | | | | | | | | | |
| BRANCH# | 00003 | 000009 | 00084 | | | | | | | | | | | |
| BR14 | 00002 | 000028 | 00033 | 0031 | 0032 | | | | | | | | | |
| BYBINARY | 00004 | 000652 | 00959 | 0933 | | | | | | | | | | |
| CHAINDLN | 00001 | 00000F | 00637 | 0623 | | | | | | | | | | |
| CHAINPTR | 00001 | 000000 | 00636 | 0613 | 0614 | 0622 | 0622 | | | | | | | |
| CHAINS | 00001 | 0003B8 | 00634 | 0631 | | | | | | | | | | |
| CHAINTST | 00002 | 000434 | 00649 | 0597 | | | | | | | | | | |
| DATAITEM | 00001 | 000000 | 00079 | 0086 | 0141 | 0150 | 0159 | 0611 | 0621 | 0636 | 0932 | 0941 | | |
| DIRECT | 00004 | 000298 | 00401 | 0362 | | | | | | | | | | |
| DIRECTAB | 00012 | 00019A | 00394 | 0374 | | | | | | | | | | |
| DIRECTOK | 00002 | 000300 | 00462 | 0419 | | | | | | | | | | |
| DIRECTSH | 00004 | 00017E | 00383 | 0417 | | | | | | | | | | |
| DIRECTST | 00002 | 000142 | 00364 | 0402 | 0407 | 0412 | | | | | | | | |
| DIRECTS2 | 00006 | 000146 | 00366 | 0384 | | | | | | | | | | |
| DOUBLE | 00008 | 000290 | 00395 | 0366 | 0367 | 0599 | 0600 | | | | | | | |
| DUPE | 00004 | 000380 | 00627 | 0612 | | | | | | | | | | |
| ENTER | 00006 | 00035C | 00618 | 0610 | | | | | | | | | | |
| FOUND | 00002 | 00064C | 00950 | 0942 | | | | | | | | | | |
| FUNCTION | 00006 | 000006 | 00081 | | | | | | | | | | | |
| F20 | 00004 | 000188 | 00390 | 0369 | | | | | | | | | | |
| F200000 | 00004 | 000430 | 00642 | 0602 | | | | | | | | | | |
| HASHIT | 00002 | 000310 | 00598 | 0651 | 0656 | 0661 | 0666 | | | | | | | |
| HASHTAB | 00004 | 000390 | 00632 | 0604 | | | | | | | | | | |
| INDICATR | 00001 | 000006 | 00082 | | | | | | | | | | | |
| INSERT | 00004 | 00002E | 00144 | 0175 | 0180 | | | | | | | | | |
| INSERTLP | 00006 | 000032 | 00145 | 0149 | | | | | | | | | | |
| ITEMLEN | 00001 | 000000 | 00086 | 0150 | 0392 | 0621 | 0636 | 0637 | | | | | | |
| ITEM1 | 00012 | 0002E2 | 00422 | 0401 | | | | | | | | | | |
| ITEM1A | 00012 | 000409 | 00639 | 0650 | | | | | | | | | | |
| ITEM2 | 00012 | 0002EE | 00423 | 0406 | | | | | | | | | | |
| ITEM2A | 00012 | 000415 | 00640 | 0655 | | | | | | | | | | |
| ITEM3 | 00012 | 0002FA | 00424 | 0411 | | | | | | | | | | |
| ITEM3A | 00012 | 000421 | 00641 | 0660 | | | | | | | | | | |
| LCR | 00002 | 000630 | 00944 | | | | | | | | | | | |
| LOOP | 00006 | 00033E | 00611 | 0608 | 0617 | | | | | | | | | |
| LOW | 00002 | 00063E | 00945 | 0943 | | | | | | | | | | |
| MANNUMBR | 00006 | 000000 | 00080 | 0145 | 0162 | 0366 | 0375 | 0392 | 0418 | 0599 | 0611 | 0611 | 0941 | 0941 |
| NEXTITEM | 00001 | 000000 | 00085 | 0086 | 0147 | 0151 | 0164 | | | | | | | |
| NOENTRY | 00004 | 000646 | 00948 | | | | | | | | | | | |
| NOTINTAB | 00006 | 00067E | 00972 | 0964 | | | | | | | | | | |
| NXAVAIL | 00004 | 000380 | 00631 | 0618 | 0619 | 0624 | | | | | | | | |
| POINTER | 00004 | 000128 | 00195 | 0148 | 0152 | 0165 | | | | | | | | |
| RETURNC | 00002 | 000056 | 00153 | 0163 | | | | | | | | | | |
| RETURN4 | 00004 | 00005A | 00155 | 0146 | 0167 | | | | | | | | | |
| RC | 00001 | 000000 | 00004 | 0368 | 0368 | 0369 | 0370 | 0371 | 0373 | 0377 | 0601 | 0601 | 0602 | 0603 | 0605 |

9/16/70

| SYMBOL | LEN | VALUE | DEFN | REFERENCES | | | | | | | | | | | | | | |
|---|---|---|---|---|---|---|---|---|---|---|---|---|---|---|---|---|---|---|
| R1 | 00001 | 000001 | 00005 | 0145 | 0150 | 0159 | 0161 | 0164 | 0165 | 0174 | 0179 | 0185 | 0365 | 0367 | 0370 | 0372 | 0373 | 0374 |
| | | | | 0374 | 0401 | 0406 | 0411 | 0416 | 0598 | 0600 | 0606 | 0607 | 0607 | 0615 | 0616 | 0616 | 0620 | 0650 |
| | | | | 0655 | 0660 | 0665 | 0797 | 0799 | 0804 | 0808 | 0812 | 0931 | 0936 | 0950 | 0959 | 0964 | | |
| R10 | 00001 | 00000A | 00014 | 0803 | 0807 | 0811 | 0812 | | | | | | | | | | | |
| R11 | 00001 | 000008 | 00015 | | | | | | | | | | | | | | | |
| R12 | 00001 | 00000C | 00016 | 0020 | 0021 | 0022 | 1028 | | | | | | | | | | | |
| R13 | 00001 | 00000D | 00017 | 0020 | 0024 | 0025 | 0026 | 0027 | 0027 | 1027 | 1027 | 1028 | | | | | | |
| R14 | 00001 | 00000E | 00018 | 0020 | 0033 | 0154 | 0156 | 0175 | 0180 | 0184 | 0379 | 0381 | 0402 | 0407 | 0412 | 0417 | 0626 | 0628 |
| | | | | 0651 | 0656 | 0661 | 0666 | 0949 | 0952 | 0960 | 0965 | 1028 | 1029 | | | | | |
| R15 | 00001 | 000000F | 00019 | 0023 | 0024 | 0025 | 0026 | 0030 | 0031 | 0141 | 0144 | 0147 | 0148 | 0151 | 0152 | 0153 | 0153 | 0155 |
| | | | | 0157 | 0176 | 0181 | 0364 | 0364 | 0377 | 0378 | 0378 | 0380 | 0383 | 0403 | 0408 | 0413 | 0604 | 0605 |
| | | | | 0606 | 0609 | 0609 | 0613 | 0618 | 0619 | 0620 | 0623 | 0623 | 0624 | 0625 | 0625 | 0627 | 0652 | 0657 |
| | | | | 0662 | 0667 | 0800 | 0801 | 0802 | 0803 | 0804 | 0805 | 0806 | 0807 | 0808 | 0809 | 0810 | 0810 | 0811 |
| | | | | 0948 | 0951 | 0951 | 0961 | 0966 | | | | | | | | | | |
| R2 | 00001 | 000002 | 00006 | 0365 | 0392 | 0598 | 0611 | 0621 | 0799 | 0800 | 0932 | 0939 | 0945 | 0950 | | | | |
| R3 | 00001 | 000003 | 00007 | | | | | | | | | | | | | | | |
| R4 | 00001 | 000004 | 00008 | 0937 | 0947 | | | | | | | | | | | | | |
| R5 | 00001 | 000005 | 00009 | 0938 | 0939 | 0940 | 0944 | 0944 | 0945 | 0946 | 0946 | | | | | | | |
| R6 | 00001 | 000006 | 00010 | 0936 | 0941 | | | | | | | | | | | | | |
| R7 | 00001 | 000007 | 00011 | | | | | | | | | | | | | | | |
| R8 | 00001 | 000008 | 00012 | | | | | | | | | | | | | | | |
| R9 | 00001 | 000009 | 00013 | | | | | | | | | | | | | | | |
| SARGUMNT | 00006 | 000138 | 00197 | 0162 | 0185 | | | | | | | | | | | | | |
| SAVEAREA | 00004 | 000744 | 01030 | 0023 | | | | | | | | | | | | | | |
| SEARCH1 | 00006 | 000306 | 00425 | 0416 | 0418 | | | | | | | | | | | | | |
| SEARCH2 | 00006 | 000403 | 00638 | 0665 | | | | | | | | | | | | | | |
| SELECT | 00006 | 000192 | 00392 | 0377 | | | | | | | | | | | | | | |
| SERIAL | 00001 | 000060 | 00160 | 0184 | | | | | | | | | | | | | | |
| SERIALLP | 00006 | 000064 | 00162 | 0166 | | | | | | | | | | | | | | |
| SERIALOK | 00002 | 00013E | 00198 | 0186 | | | | | | | | | | | | | | |
| SORTED | 00012 | 000684 | 00973 | 0939 | | | | | | | | | | | | | | |
| SORTEDND | 00001 | 000738 | 00988 | | | | | | | | | | | | | | | |
| STORAGE | 00001 | 000000 | 00002 | 0140 | | | | | | | | | | | | | | |
| TABLE | 00012 | 0000B0 | 00189 | 0144 | 0161 | | | | | | | | | | | | | |
| TABLEMPT | 00012 | 0000EC | 00194 | 0195 | | | | | | | | | | | | | | |
| TEMPERTR | 00002 | 0004B0 | 00816 | 0803 | | | | | | | | | | | | | | |
| TESTCODE | 00004 | 00007E | 00174 | 0142 | | | | | | | | | | | | | | |
| TESTDATA | 00012 | 000008 | 00191 | 0179 | | | | | | | | | | | | | | |
| WORD | 00004 | 000388 | 0063C | 0614 | 0615 | | | | | | | | | | | | | |

NO STATEMENTS FLAGGED IN THIS ASSEMBLY
*STATISTICS* SOURCE RECORDS (SYSIN) = 1006 SOURCE RECORDS (SYSLIB) = 25
*OPTIONS IN EFFECT* LIST, NODECK, LOAD, NORENT, XREF, NOTEST, ALGN, OS, LINECNT = 55
1152 PRINTED LINES

```
 F44-LEVEL LINKAGE EDITOR OPTIONS SPECIFIED MAP,LET,LIST,NCAL
           VARIABLE OPTIONS USED -  SIZE=(45056,6144)-          DEFAULT OPTION(S) USED
IEW0000              ENTRY UTILITY

                                                   MODULE MAP

  CONTROL SECTION                          ENTRY

    NAME     ORIGIN  LENGTH                  NAME   LOCATION     NAME   LOCATION     NAME   LOCATION     NAME   LOCATION

  STORAGE       00     79E
  UTILITY      7A0     5A0
                                           PRINT        802    PCHKRETN     A5E

 ENTRY ADDRESS       7A0
 TOTAL LENGTH        D40

****GO        DOES NOT EXIST BUT HAS BEEN ADDED TO DATA SET
```

```
 SSSSSSSSSS   TTTTTTTTTTTT  OOOOOOOOOOOO  RRRRRRRRRRR   EEEEEEEEEEEE                TTTTTTTTTTTT   AAAAAAAAAA
SSSSSSSSSSSS  TTTTTTTTTTTT  OOOOOOOOOOOO  RRRRRRRRRRRR  EEEEEEEEEEEE                TTTTTTTTTTTT  AAAAAAAAAAAA
SS        SS      TT       OO        OO  RR        RR  EE                               TT       AA        AA
SS                TT       OO        OO  RR        RR  EE                               TT       AA        AA
SSS               TT       OO        OO  RR        RR  EE                               TT       AA        AA
 SSSSSSSSS        TT       OO        OO  RRRRRRRRRRRR  EEEEEEEE                           TT       AAAAAAAAAAAA
  SSSSSSSS        TT       OO        OO  RRRRRRRRRRR   EEEEEEEE                           TT       AAAAAAAAAAAA
         SSS      TT       OO        OO  RR    RR      EE                               TT       AA        AA
          SS      TT       OO        OO  RR     RR     EE                               TT       AA        AA
SS        SS      TT       OO        OO  RR      RR    EE                               TT       AA        AA
SSSSSSSSSSSS      TT       OOOOOOOOOOOO  RR       RR   EEEEEEEEEEEE                     TT       AA        AA
 SSSSSSSSSS       TT       OOOOOOOOOOOO  RR        RR  EEEEEEEEEEEE                     TT       AA        AA
```

```
  9999999999
 999999999999
 99        99
 99        99
 99        99
 999999999999
 999999999999
           99
           99
 99        99
 999999999999
  9999999999
```



**********

| SYMBOL | TYPE | ID | ADDR | LENGTH | LD ID |
|---|---|---|---|---|---|
| DIRECTTA | SD | 01 | 000000 | 00021C | |

```
 LOC  OBJECT CODE    ADDR1 ADDR2  STMT   SOURCE STATEMENT                                          F08APR70   9/17/70

000000                                1 DIRECTTA CSECT                                                    00000100
000000 90EC D00C            0000C     2          STM   R14,R12,12(R13)    SAVE CALLER'S REGISTERS.        00000200
000004 05C0                           3          BALR  R12,0              SET UP MY BASE.                 00000300
000006                                4          USING *,R12                                              00000400
000006 41F0 C1CE            001D4     5          LA    R15,DIRECTSV       ADDRESS OF MY SAVE AREA.        00000500
00000A 50DF 0004            00004     6          ST    R13,4(R15)         CHAIN SAVE AREAS.               00000600
00000E 50FD 0008            00008     7          ST    R15,8(R13)                                         00000700
000012 18DF                           8          LR    R13,R15                                            00000800
000014 D703 D008 D008 00008 00008     9          XC    8(4,R13),8(R13)    TERMINATE SAVE AREA CHAIN.      00000900
                                     10 *        STANDARD SAVING CONVENTIONS COMPLETE.                    00001000
```

```
LOC  OBJECT CODE    ADDR1 ADDR2  STMT   SOURCE STATEMENT                                    F08APR70   9/17/70

                                  13 *                        ************************************          00001300
                                  14 *                        * STORAGE & RETRIEVAL T/A PROBLEM 1. *          00001400
                                  15 *                        * ------- - --------- --- ------- -- *          00001500
                                  16 *                        ************************************          00001600


                                  18 *+++++++++++++++++++++++++++++++++++++++++++++++++++++++++++++++++++++ 00001800
                                  19 *                                                                      00001900
                                  20 *        THIS ROUTINE CHAINS 12-BYTE ITEMS INTO A TABLE USING THE      00002000
                                  21 *        DIRECT STORAGE TECHNIQUE. IT USES 'HASHING' TO LOCATE THE     00002100
                                  22 *        ADDRESS OF THE CHAINING POINTER. IT PERFORMS MODULO DIVISION  00002200
                                  23 *        OF THE ARGUMENT BY 20, WHICH GIVES IT AN ADDRESS IN 'HASHTAB', 00002300
                                  24 *        WHICH CONTAINS POINTERS TO THE CHAINS OF SYNONYMS.            00002400
                                  25 *                                                                      00002500
                                  26 *        UNFORTUNATELY, THIS PROGRAM DOESN'T APPEAR TO HAVE WORKED AS  00002600
                                  27 *        IT WAS INTENDED. YOUR JOB, SHOULD YOU DECIDE TO ACCEPT IT,    00002700
                                  28 *        IS TO FIND THE ERROR IN THE PROGRAM OR THE DATA THAT MADE     00002800
                                  29 *        THE PROGRAM FAIL. AS ALWAYS, SHOULD YOU BE CAPTURED OR        00002900
                                  30 *        KILLED....                                                    00003000
                                  31 *                    THIS IS THE TABLE USED IN THE PROGRAM.            00003100
                                  32 *                                                                      00003200
                                  33 *        'HASHTAB'             'CHAINS'                                00003300
                                  34 *        +________+            +------+-----------+--------+           00003400
                                  35 *        |   +----+----------->|200000| DATA ITEM |   +----+---->+     00003500
                                  36 *        +--------+            +------+-----------+--------+     |     00003600
                                  37 *        |00000000|     +----->|400009| DATA ITEM |00000000|     |     00003700
                                  38 *        +--------+     |      +------+-----------+--------+     |     00003800
                                  39 *        |   +----+-----)----->|800002| DATA ITEM |00000000|     |     00003900
                                  40 *        +--------+     |      +------+-----------+--------+     V     00004000
                                  41 *        |00C00000|     |      |6C0000| DATA ITEM |00000000|<----+     00004100
                                  42 *        +--------+     |      +------+-----------+--------+ (POINTS TO 00004200
                                  43 *        |00000000|     |  +-->|                            | THE START 00004300
                                  44 *        +--------+     |  |   +----------------------------+ OF THIS   00004400
                                  45 *        ))))))))))     |  |   |   ( FREE AREA )            | LINE.)    00004500
                                  46 *        ((((((((((     |  |   +----------------------------+           00004600
                                  47 *        +--------+     |  |   |                            |           00004700
                                  48 *        |   +----+---->+  |   |                            |           00004800
                                  49 *        +--------+        |   |                            |           00004900
                                  50 *        |00000000|        |   )))))))))))))))))))))))))))))           00005000
                                  51 *        +--------+        |   (((((((((((((((((((((((((((((           00005100
                                  52 *        ))))))))))        |   +----------------------------+           00005200
                                  53 *        ((((((((((        |                                           00005300
                                  54 *        +--------+        |                                           00005400
                                  55 *                          |                                           00005500
                                  56 *        'NXAVAIL'         |                                           00005600
                                  57 *(ADDR.  +--------+        |                                           00005700
                                  58 *OF 1ST  |   +----+------->+                                           00005800
                                  59 *UNUSED  +--------+                                                   00005900
                                  60 *BYTE IN 'CHAINS'.)                                                   00006000
                                  61 *                                                                      00006100
                                  62 *+++++++++++++++++++++++++++++++++++++++++++++++++++++++++++++++++++++ 00006200
```

```
 LOC  OBJECT CODE    ADDR1 ADDR2  STMT   SOURCE STATEMENT                    F08APR70   9/17/70

000000                              64 R0        EQU   0                                00006400
000001                              65 R1        EQU   1                                00006500
000002                              66 R2        EQU   2                                00006600
000003                              67 R3        EQU   3                                00006700
000004                              68 R4        EQU   4                                00006800
000005                              69 R5        EQU   5                                00006900
000006                              70 R6        EQU   6                                00007000
000007                              71 R7        EQU   7                                00007100
000008                              72 R8        EQU   8                                00007200
000009                              73 R9        EQU   9                                00007300
00000A                              74 R10       EQU   10                               00007400
00000B                              75 R11       EQU   11                               00007500
00000C                              76 R12       EQU   12                               00007600
00000D                              77 R13       EQU   13                               00007700
00000E                              78 R14       EQU   14                               00007800
00000F                              79 R15       EQU   15                               00007900
```

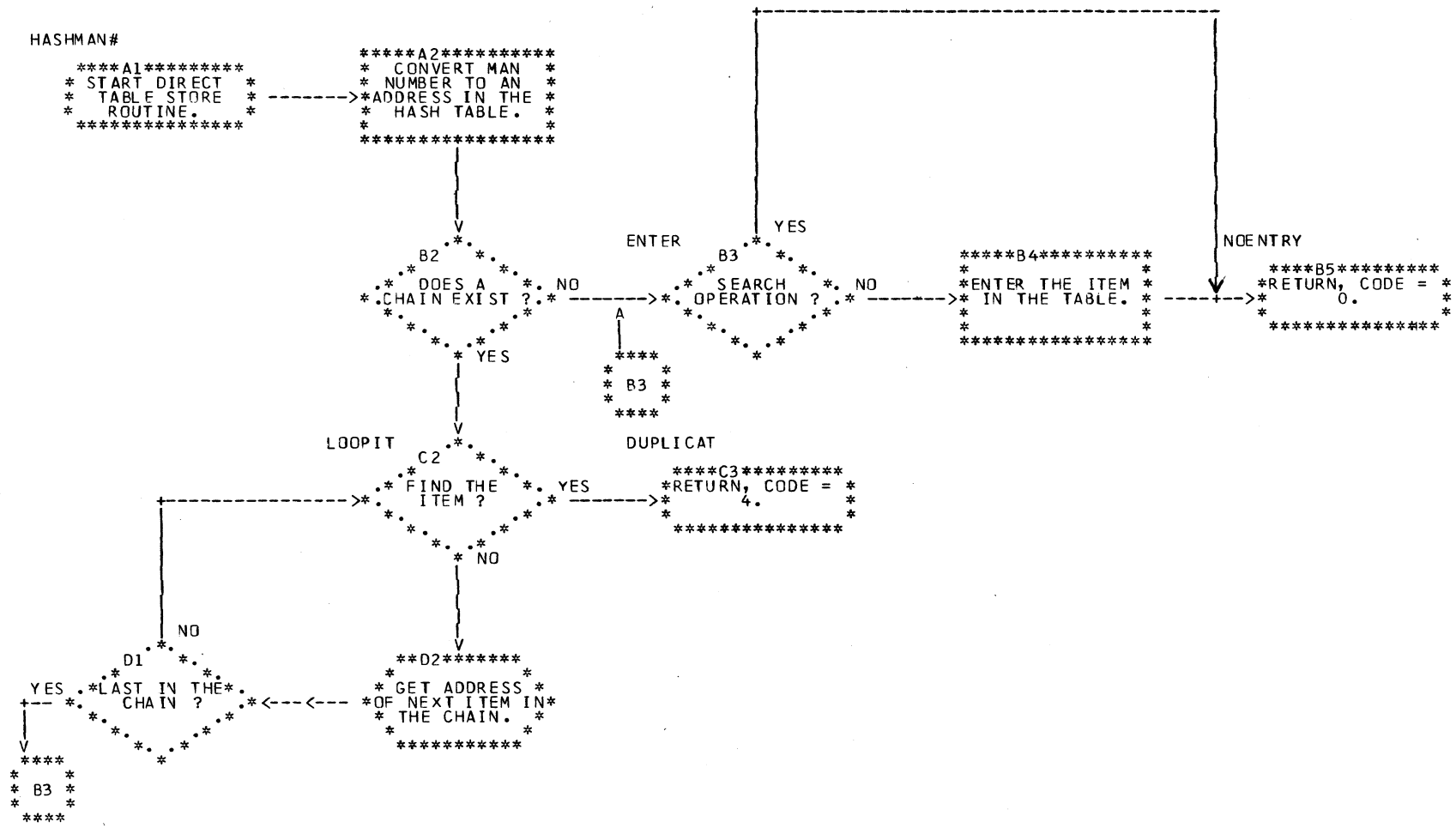
HASHMAN#
A1
START DIRECT TABLE STORE ROUTINE.
A2
CONVERT MAN NUMBER TO AN ADDRESS IN THE HASH TABLE.
B2
DOES A CHAIN EXIST ?
NO
YES
ENTER
B3
SEARCH OPERATION ?
NO
YES
B4
ENTER THE ITEM IN THE TABLE.
NOENTRY
B5
RETURN, CODE = 0.
A
B3
LOOPIT
C2
FIND THE ITEM ?
YES
NO
DUPLICAT
C3
RETURN, CODE = 4.
D1
LAST IN THE CHAIN ?
YES
NO
D2
GET ADDRESS OF NEXT ITEM IN THE CHAIN.
B3

```
 LOC   OBJECT CODE     ADDR1 ADDR2  STMT   SOURCE STATEMENT                                                F08APR70   9/17/70

00001A 47F0 C17A             00180    81          B     CHAINTST              BRANCH TO THE TEST CASE CODE.        00008100
000000                               82          USING DATAITEM,R5                                                 00008200
00001E 1821                          83 HASHMAN# LR    R2,R1                                                    00008300
000020 F275 C172 1000 00178 00000    84          PACK  DOUBLE,0(6,R1)        CONVERT THE MAN NUMBER TO AN ADDRESS 00008400
000026 4E10 C172             00178   85          CVD   R1,DOUBLE             USING MODULO DIVISION BY             00008500
00002A 1B00                          86          SR    R0,R0                 20.                                  00008600
00002C 5D00 C16A             00170   87          D     R0,F20                                                     00008700
000030 8900 0002             00002   88          SLL   R0,2                                                       00008800
000034 4150 C0A2             000A8   89          LA    R5,HASHTAB            ADDRESS OF THE HASHED ADDRESS TABLE. 00008900
000038 1A50                          90          AR    R5,R0                 ADD THE HASHED DISPLACEMENT.         00009000
00003A 5815 0000             00000   91          L     R1,0(R5)              GET THE CHAIN PTR, IF SUCH EXISTS.   00009100
00003E 1211                          92          LTR   R1,R1                 CHECK FOR THE EXISTENCE OF A CHAIN.  00009200
000040 4770 C046             0004C   93          BNZ   LOOPIT                YES, SEARCH FOR END.                 00009300
000044 4155 0001             00001   94          LA    R5,1(R5)              NO, FAKE THE ADDRESS OF A CHAIN PTR. 00009400
000048 47F0 C064             0006A   95          B     ENTER                 AND GO ENTER THE ITEM IN CHAIN.      00009500
00004C D505 5000 2000 00000 00000    96 LOOPIT   CLC   MANNUMBR,MANNUMBR-DATAITEM(R2) SEARCH FOR THE ITEM.      00009600
000052 4780 C090             00096   97          BE    DUPLICAT              DUPLICATE FOUND, EXIT.               00009700
000056 4150 500C             0000C   98          LA    R5,CHAINPTR                                                00009800
00005A D202 C09B 500C 000A1 0000C    99          MVC   WORD+1(3),CHAINPTR    GET ADDRESS OF NEXT ITEM IN CHAIN.   00009900
000060 5810 C09A             000A0  100          L     R1,WORD                                                    00010000
000064 1211                         101          LTR   R1,R1                 IS THERE ONE ?                       00010100
000066 477C C046             0004C  102          BNZ   LOOPIT                YES, CONTINUE.                       00010200
00006A 9180 C096       0009C        103 ENTER   TM    FLAG,SEARCH           IS THIS A SEARCH OPERATION ?         00010300
00006E 4710 C08C             00092  104          BO    NOENTRY               YES, DON'T INSERT THIS ONE.          00010400
000072 D202 5000 C09F 00000 000A5   105          MVC   0(3,R5),NXAVAIL+1     INSERT CHAIN POINTER.                00010500
000078 5850 C09E             000A4  106          L     R5,NXAVAIL                                                 00010600
00007C 1815                         107          LR    R1,R5                                                      00010700
00007E D20E 5000 2000 00000 00000   108          MVC   DATAITEM(ITEMLEN),0(R2) INSERT THE DATA ITEM IN CHAIN.   00010800
000084 D702 500C 500C 0000C 0000C   109          XC    CHAINPTR(3),CHAINPTR ZERO THE CHAIN POINTER.               00010900
00008A 41F0 500F             0000F  110          LA    R15,NEXTITEM          POINT TO NEXT FREE SPACE IN TABLE.   00011000
00008E 50F0 C09E             000A4  111          ST    R15,NXAVAIL                                                00011100
000092 1BFF                         112 NOENTRY SR    R15,R15               RETURN CODE = 0, NORMAL RETURN.      00011200
000094 07FE                         113          BR    R14                                                        00011300
000096 41F0 0004             00004  114 DUPLICAT LA    R15,4                 RETURN CODE = 4.                     00011400
00009A 07FE                         115          BR    R14                   DUPLICATE, SET ERROR RETURN CODE.    00011500

00009C 00                           117 FLAG    DC    X'0'                                                       00011700
000080                              118 SEARCH  EQU   X'80'                                                      00011800
00009D 000000
0000A0 00000000                     119 WORD    DC    F'0'                  &&&&&&&&&&&&&&&&&&&&&&&&&&&&&&&&&&&& 00011900
0000A4 000000F8                     120 NXAVAIL DC    A(CHAINS)             & TABLES, CONSTANTS AND TEST DATA  & 00012000
0000A8 0000000000000000             121 HASHTAB DC    20F'0'                & USED BY THE DIRECT STORAGE       & 00012100
0000F8 4040404040404040             122 CHAINS  DC    75C' '                & ROUTINE. (SYNONYM CHAINING        & 00012200
000143 F4F0F0F0F0F1                 123 SEARCH2 DC    C'400001'             & VARIETY).                         & 00012300
000149 F8F0F0F0F0F1E6F1             124 ITEM1A  DC    C'8000C1W12345'       &&&&&&&&&&&&&&&&&&&&&&&&&&&&&&&&&&&& 00012400
000155 F6F0F0F0F0F6C4F3             125 ITEM2A  DC    C'600006D32568'                                            00012500
000161 F4F0F0F0F0F1C4F9             126 ITEM3A  DC    C'400001D98765'                                            00012600
00016D 000000
000170 00000014                     127 F20     DC    F'20'                                                      00012700
000178                              128 DOUBLE  DS    D                                                          00012800
```

```
  LOC  OBJECT CODE    ADDR1 ADDR2  STMT   SOURCE STATEMENT                                              F08APR70   9/17/70

                                    130 *&&&&&&&&&&&&&&&&&&&&&&&&&&&&&&&&&&&&&&&&&&&&&&&&&&&&&&&&&&&&&&&&&&&&&& 00013000
                                    131 *         THIS CODE TESTS THE CHAINING EXAMPLE. IT ADDS THREE DATA      00013100
                                    132 *         ITEMS, ONE OF WHICH IS A SYNONYM, AND IT RETRIEVES ONE OF     00013200
                                    133 *         THE ITEMS JUST ADDED.                                          00013300
                                    134 *&&&&&&&&&&&&&&&&&&&&&&&&&&&&&&&&&&&&&&&&&&&&&&&&&&&&&&&&&&&&&&&&&&&&&& 00013400
000180                              135 CHAINTST DS    0H                                                        00013500
000180 4110 C143             00149  136          LA    R1,ITEM1A          FIRST ITEM TO BE ADDED.               00013600
000184 45E0 C018             0001E  137          BAL   R14,HASHMAN#                                             00013700
000188 47FF C186             0018C  138          B     *+4(R15)                                                 00013800
00018C 47F0 C18C             00192  139          B     *+6                                                      00013900
000190 0007                         140          DC    H'7'               DUMP IF INSERTION FAILS.              00014000
000192 4110 C14F             00155  141          LA    R1,ITEM2A          SECOND ITEM TO BE ADDED.              00014100
000196 45E0 C018             0001E  142          BAL   R14,HASHMAN#                                             00014200
00019A 47FF C198             0019E  143          B     *+4(R15)                                                 00014300
00019E 47F0 C19E             001A4  144          B     *+6                                                      00014400
0001A2 0008                         145          DC    H'8'               DUMP IF INSERTION FAILS.              00014500
0001A4 4110 C15B             00161  146          LA    R1,ITEM3A          THIRD ITEM TO BE ADDED (SYNONYM).     00014600
0001A8 45E0 C018             0001E  147          BAL   R14,HASHMAN#                                             00014700
0001AC 47FF C1AA             001B0  148          B     *+4(R15)                                                 00014800
0001B0 47F0 C1B0             001B6  149          B     *+6                                                      00014900
0001B4 0009                         150          DC    H'9'               DUMP IF INSERTION FAILS.              00015000
0001B6 9680 C096       0009C        151          OI    FLAG,SEARCH        SET SEARCH OPERATION INDICATOR.       00015100
0001BA 4110 C13D             00143  152          LA    R1,SEARCH2         ITEM TO BE LOCATED                    00015200
0001BE 45E0 C018             0001E  153          BAL   R14,HASHMAN#                                             00015300
0001C2 47FF C1C0             001C6  154          B     *+4(R15)                                                 00015400
0001C6 000A                         155          DC    H'10'              DUMP IF NOT FOUND                     00015500
0001C8 0700                         156          NOPR  0                                                        00015600
0001CA 58DD D004             00004  157          L     R13,4(R13)                                               00015700
0001CE 98EC D00C             0000C  158          LM    R14,R12,12(R13)                                          00015800
0001D2 07FE                         159          BR    R14                                                      00015900
0001D4                              160 DIRECTSV DS    18F                                                      00016000


000000                              162 DATAITEM DSECT                                                          00016200
000000                              163 MANNUMBR DS    CL6                                                      00016300
000006                              164 FUNCTION DS    CL6                                                      00016400
00000C                              165 CHAINPTR DS    CL3                                                      00016500
00000F                              166 NEXTITEM DS    0C                                                       00016600
00000F                              167 ITEMLEN  EQU   NEXTITEM-DATAITEM                                        00016700
```

| POS.ID | REL.ID | FLAGS | ADDRESS |
|---|---|---|---|
| 01 | 01 | 0C | 0000A4 |

9/17/70

| SYMBOL | LEN | VALUE | DEFN | REFERENCES | | | | | | | | | | | | | |
|---|---|---|---|---|---|---|---|---|---|---|---|---|---|---|---|---|---|
| CHAINPTR | 00003 | 000000C | 00165 | 0098 | 0099 | 0109 | 0109 | | | | | | | | | | |
| CHAINS | 00001 | 0000F8 | 00122 | 0120 | | | | | | | | | | | | | |
| CHAINTST | 00002 | 000180 | 00135 | 0081 | | | | | | | | | | | | | |
| DATAITEM | 00001 | 000000 | 00162 | 0082 | 0096 | 0108 | 0167 | | | | | | | | | | |
| DIRECTSV | 00004 | 0001D4 | 00160 | 0005 | | | | | | | | | | | | | |
| DIRECTTA | 00001 | 000000 | 00001 | | | | | | | | | | | | | | |
| DOUBLE | 00008 | 000178 | 00128 | 0084 | 0085 | | | | | | | | | | | | |
| DUPLICAT | 00004 | 000096 | 00114 | 0097 | | | | | | | | | | | | | |
| ENTER | 00004 | 00006A | 00103 | 0095 | | | | | | | | | | | | | |
| FLAG | 00001 | 00009C | 00117 | 0103 | 0151 | | | | | | | | | | | | |
| FUNCTION | 00006 | 000006 | 00164 | | | | | | | | | | | | | | |
| F20 | 00004 | 000170 | 00127 | 0087 | | | | | | | | | | | | | |
| HASHMAN# | 00002 | 00001E | 00083 | 0137 | 0142 | 0147 | 0153 | | | | | | | | | | |
| HASHTAB | 00004 | 0000A8 | 00121 | 0089 | | | | | | | | | | | | | |
| ITEMLEN | 00001 | 00000F | 00167 | 0108 | | | | | | | | | | | | | |
| ITEM1A | 00012 | 000149 | 00124 | 0136 | | | | | | | | | | | | | |
| ITEM2A | 00012 | 000155 | 00125 | 0141 | | | | | | | | | | | | | |
| ITEM3A | 00012 | 000161 | 00126 | 0146 | | | | | | | | | | | | | |
| LOOPIT | 00006 | 00004C | 00096 | 0093 | 0102 | | | | | | | | | | | | |
| MANNUMBR | 00006 | 000000 | 00163 | 0096 | 0096 | | | | | | | | | | | | |
| NEXTITEM | 00001 | 00000F | 00166 | 0110 | 0167 | | | | | | | | | | | | |
| NOENTRY | 00002 | 000092 | 00112 | 0104 | | | | | | | | | | | | | |
| NXAVAIL | 00004 | 0000A4 | 00120 | 0105 | 0106 | 0111 | | | | | | | | | | | |
| R0 | 00001 | 000000 | 00064 | 0086 | 0086 | 0087 | 0088 | 0090 | | | | | | | | | |
| R1 | 00001 | 000001 | 00065 | 0083 | 0084 | 0085 | 0091 | 0092 | 0092 | 0100 | 0101 | 0101 | 0107 | 0136 | 0141 | 0146 | 0152 |
| R10 | 00001 | 00000A | 00074 | | | | | | | | | | | | | | |
| R11 | 00001 | 00000B | 00075 | | | | | | | | | | | | | | |
| R12 | 00001 | 00000C | 00076 | 0002 | 0003 | 0004 | 0158 | | | | | | | | | | |
| R13 | 00001 | 00000D | 00077 | 0002 | 0006 | 0007 | 0008 | 0009 | 0009 | 0157 | 0157 | 0158 | | | | | |
| R14 | 00001 | 00000E | 00078 | 0002 | 0113 | 0115 | 0137 | 0142 | 0147 | 0153 | 0158 | 0159 | | | | | |
| R15 | 00001 | 00000F | 00079 | 0005 | 0006 | 0007 | 0008 | 0110 | 0111 | 0112 | 0112 | 0114 | 0138 | 0143 | 0148 | 0154 | |
| R2 | 00001 | 000002 | 00066 | 0083 | 0096 | 0108 | | | | | | | | | | | |
| R3 | 00001 | 000003 | 00067 | | | | | | | | | | | | | | |
| R4 | 00001 | 000004 | 00068 | | | | | | | | | | | | | | |
| R5 | 00001 | 000005 | 00069 | 0082 | 0089 | 0090 | 0091 | 0094 | 0094 | 0098 | 0105 | 0106 | 0107 | | | | |
| R6 | 00001 | 000006 | 00070 | | | | | | | | | | | | | | |
| R7 | 00001 | 000007 | 00071 | | | | | | | | | | | | | | |
| R8 | 00001 | 000008 | 00072 | | | | | | | | | | | | | | |
| R9 | 00001 | 000009 | 00073 | | | | | | | | | | | | | | |
| SEARCH | 00001 | 000080 | 00118 | 0103 | 0151 | | | | | | | | | | | | |
| SEARCH2 | 00006 | 000143 | 00123 | 0152 | | | | | | | | | | | | | |
| WORD | 00004 | 0000A0 | 00119 | 0099 | 0100 | | | | | | | | | | | | |

NO STATEMENTS FLAGGED IN THIS ASSEMBLY
*STATISTICS* SOURCE RECORDS (SYSIN) = 182
*OPTIONS IN EFFECT* LIST, NODECK, LOAD, NORENT, XREF, NOTEST, ALGN, OS, LINECNT = 55
246 PRINTED LINES

```
 F44-LEVEL LINKAGE EDITOR OPTIONS SPECIFIED MAP,LET,LIST,NCAL
           VARIABLE OPTIONS USED -  SIZE=(45056,6144)-          DEFAULT OPTION(S) USED
IEW0000              ENTRY UTILITY

                                                   MODULE MAP

  CONTROL SECTION                        ENTRY

    NAME     ORIGIN  LENGTH                NAME   LOCATION     NAME   LOCATION     NAME   LOCATION     NAME   LOCATION

  DIRECTTA       00     21C
  UTILITY       220     5A0
                                         PRINT        282    PCHKRETN     4DE

 ENTRY ADDRESS       220
 TOTAL LENGTH        7C0

****GO        DOES NOT EXIST BUT HAS BEEN ADDED TO DATA SET
```

```
F.P. REGS.  00.01C974 00000000   00.000000 02000000   FF.2EE462 C9C5E6D3   40.404040 0001DC34

REGS 0-7     0000003C 00000000 00064983 00000000    0001A2E0 00064925 0001D850 0001B508
REGS 8-15    0001D7B0 00000000 0001D7D8 00000000    6F064846 00064A14 9F064A02 00000000

000000    00000000 00000000 00000000 00000000    00064840 00000000 FF060000 80000000  *................. ............*
000020    FF040003 40006A3E FFA50001 4F064A08    0000FF00 00000000 FFA50233 8F064A78  *.... ............................*
000040    00001360 08000000 00001358 00005920    02C036A4 0000996C C0040000 00007498  *.............................*
000060    0C040000 00007BC8 00040000 00007588    00000000 00012D10 C0040000 0000751A  *.......H......................*

064840    90ECD00C 05CC41F0 C1CE50DF 000450FD    000818DF D703D008 D00847F0 C17A1821  *.......0A...........P......0A...*
064860    F275C172 10004E10 C1721B00 5D00C16A    89000002 4150C0A2 1A505815 00001211  *2.A.....A.....A................*
064880    4770C046 41550001 47F0C064 D5055000    20004780 C0904150 5C0CD202 C09B500C  *.........0..N.............K.....*
0648A0    5810C09A 12114770 C0469180 C0964710    C08CD202 5000C09F 5850C09E 1815D20E  *..................K...........K.*
0648C0    50002000 D702500C 500C41F0 500F50F0    C09E1BFF 07FE41F0 000407FE 80000000  *....P......0...0.......0........*
0648EC    00000000 00064965 00000000 00064938    00000000 00000000 00000000 00064956  *.............................*
064900    00000000 00000000 00000000 00000000    00000000 00000000 00000000 00064947  *.............................*
064920    00000000 00000000 00000000 00000000    00000000 00000000 F8F0F0F0 F0F1E6F1  *.......................800001W1*
064940    F2F3F4F5 000000F6 F0F0F0F0 F6C4F3F2    F5F6F800 0000F4F0 F0F0F0F1 C4F9F8F7  *2345...600006D32568...400001D987*
064960    F6F50000 00404040 40404040 40404040    40404040 40404040 40404040 40404040  *65...                            *
064980    404040F4 F0F0F0F0 F1F8F0F0 F0F0F1E6    F1F2F3F4 F5F6F0F0 F0F0F6C4 F3F2F5F6  *   400001800001W12345600006D3256*
0649A0    F8F4F0F0 F0F0F1C4 F9F8F7F6 F5000000    00000014 5000D207 00000000 0412035C  *8400001D98765.........K.........*
0649C0    411CC143 45E0C018 47FFC186 47F0C18C    00074110 C14F45E0 C01847FF C19847F0  *..A.......A..CA.....A.......A..0*
0649E0    C19E0008 411CC15B 45E0C018 47FFC1AA    47F0C1B0 00099680 C0964110 C13D45E0  *A.....A.......A..0A.........A...*
064A00    C01847FF C1C000CA 070058DD 000498EC    D00C07FE 926B5000 C0070F68 00000000  *....A...........................*
064A20    47F0940E 12334780 94261B11 16134106    00000A4E 58F0703C 9104F089 47809426  *.0...................0....0.....*
064A40    4150501E 58F00010 58F0F03C 9108F089    4780946C 58304138 12334780 946C1211  *.....0...00...0..................*
064A60    90ECD00C 05C004F0 07004110 C0100511    0F064B04 7FFF0A0E 58B00010 9110B074  *.......0........................*

065020    4A009BDE 40050000 47F095C6 48609BEE    8A600001 4770969E 48609C26 41660001  *.... ....0.F....................*
```



**********

```
 SSSSSSSSSS   TTTTTTTTTTTT  OOOCOOCCCCCC  RRRRRRRRRRR
SSSSSSSSSSSS  TTTTTTTTTTTT  OOOOOOOOOOOO  RRRRRRRRRRRR
SS        SS      TT       OO        OO  RR        RR
SS                TT       OO        OO  RR        RR
SSS               TT       OO        OO  RR        RR
 SSSSSSSSS        TT       OO        OO  RRRRRRRRRRRR
  SSSSSSSSS       TT       OO        OO  RRRRRRRRRRR
         SSS      TT       OO        OO  RR    RR
          SS      TT       OO        OO  RR     RR
SS        SS      TT       OO        OO  RR      RR
SSSSSSSSSSSS      TT       OOOOOOOOOOOO  RR       RR
 SSSSSSSSSS       TT       OOOCOOOOOOOO  RR        RR
```

```
TTTTTTTTTTTT   AAAAAAAAAA    2222222222
TTTTTTTTTTTT  AAAAAAAAAAAA  222222222222
     TT       AA        AA  22        22
     TT       AA        AA            22
     TT       AA        AA            22
     TT       AAAAAAAAAAAA           22
     TT       AAAAAAAAAAAA        22
     TT       AA        AA      22
     TT       AA        AA    22
     TT       AA        AA  22
     TT       AA        AA  222222222222
     TT       AA        AA  222222222222
```

```
 9999999999
999999999999
99        99
99        99
99        99
999999999999
999999999999
          99
          99
99        99
999999999999
 9999999999
```



**********

EXTERNAL SYMBOL DICTIONARY

| SYMBOL | TYPE | ID | ADDR | LENGTH | LD ID |
|---|---|---|---|---|---|
| BINARY | SD | 01 | 000000 | 000470 | |
| LOCELEM | ER | 02 | | | |
| PRINT | ER | 03 | | | |
| LOCELEM | SD | 04 | 000470 | 000040 | |

```
       DATA STORAGE AND RETRIEVAL T/A PROJECT 2.                                                                  PAGE    1

  LOC  OBJECT CODE    ADDR1 ADDR2  STMT   SOURCE STATEMENT                                              F08APR70   9/17/70

                                      2 *********************************************************************** 00000200
                                      3 *                                                                       00000300
                                      4 *        THIS ROUTINE PERFORMS A BINARY SEARCH ON A TABLE OF 63         00000400
                                      5 *        12-BYTE ELEMENTS, WHICH CONTAIN A FULL-WORD ARGUMENT AND       00000500
                                      6 *        AN 8-BYTE FUNCTION. A SUBROUTINE IS USED TO PASS SEARCH        00000600
                                      7 *        ARGUMENTS (IT WILL PASS THREE) TO THE MAIN ROUTINE. THE        00000700
                                      8 *        MAIN ROUTINE WILL THEN DO A BINARY SEARCH FOR THE ELEMENT      00000800
                                      9 *        HAVING THE SAME FUNCTION. IF IT FINDS IT, IT WILL PRINT THE    00000900
                                     10 *        FUNCTION PORTION OF THE ELEMENT. IF IT CANNOT BE FOUND, 8      00001000
                                     11 *        ASTERISKS (*) WILL BE PRINTED INSTEAD. IN CORRECT OPERATION,   00001100
                                     12 *        THE WORDS 'THIS SHOULD PRINT' WILL BE PRINTED. UNFORTUNATELY,  00001200
                                     13 *        THE PROGRAM ISN'T WORKING TODAY. PLEASE FIND OUT WHY THE       00001300
                                     14 *        PROGRAM DOESN'T WORK. WHICH INSTRUCTION(S) NEED TO BE ADDED,   00001400
                                     15 *        REMOVED, OR CHANGED TO CORRECT THE PROBLEM.                    00001500
                                     16 *                                                                       00001600
                                     17 *********************************************************************** 00001700


                                     19 *&&&&&&&&&&&&&&&&&&&&&&&&&&&&&&&&&&&&&&&&&&&&&&&&&&&&&&&&&&&&&&&&&&&&&& 00001900
                                     20 *                                                                       00002000
                                     21 *        THIS PROGRAM WAS WRITTEN IN A HIGH-LEVEL (COMPILER)            00002100
                                     22 *        LANGUAGE. THE COMMENTS ON THE INSTRUCTIONS WERE ADDED          00002200
                                     23 *        FOR YOUR CONVENIENCE, AND WERE NOT A FUNCTION OF THE           00002300
                                     24 *        COMPILER.                                                      00002400
                                     25 *                                                                       00002500
                                     26 *&&&&&&&&&&&&&&&&&&&&&&&&&&&&&&&&&&&&&&&&&&&&&&&&&&&&&&&&&&&&&&&&&&&&&& 00002600
000000                               27 BINARY   CSECT ,                                                        00002700
000000 90EC D00C            0000C    28          STM   @E,@C,12(@D)                                       0026  00002800
000004 05B0                          29          BALR  @B,@0                                              0026  00002900
000006                               30          USING BINARY+00000+000006,@B                             0026  00003000
000006 50D0 B0AA            000B0    31          ST    @D,@SAV002+4                                       0026  00003100
00000A 41F0 B0A6            000AC    32          LA    @F,@SAV002                                         0026  00003200
00000E 50FC D008            00008    33          ST    @F,8(0,@D)                                         0026  00003300
000012 18DF                          34          LR    @D,@F                                              0026  00003400
000014 4170 B176            0017C    35          LA    @7,TABLE                                                 00003500
000018                               36          DS    0H                                                       00003600
000018 4160 00C0            000C0    37 TOP3     LA    @6,192                SET UP THE INITIAL PARAMETERS  0031  00003700
00001C 4150 0180            00180    38          LA    @5,384                 FOR THE BINARY SEARCH.        0032  00003800
000020 1A57                          39          AR    @5,@7                                              0032  00003900
000022 58F0 BC9A            00CA0    40          L     @F,@V2                ADDRESS OF LOCELEM             0033  00004000
000026 05EF                          41          BALR  @E,@F                  GO TO THE SUBROUTINE TO GET A 0033  00004100
000028 1211                          42          LTR   @1,@1                  SEARCH ARGUMENT.              0034  00004200
00002A 4780 B08A            00090    43          BC    08,@EL02              IF NO ARGUMENT, QUIT.          0035  00004300
```

```
 LOC  OBJECT CODE    ADDR1 ADDR2  STMT   SOURCE STATEMENT                                          F08APR70   9/17/70

                                   45 * * * * * * * * * * * * * * * * * * * * * * * * * * * * * * * * * * * * * * * * 00004500
                                   46 *        THIS IS THE BEGINNING OF THE BINARY SEARCH ROUTINE.                   00004600
                                   47 *        IT WILL LOCATE THE DATA PORTION OF THE ITEMS WHOSE                    00004700
                                   48 *        ARGUMENT VALUE IS RETURNED IN REGISTER 1 BY THE                       00004800
                                   49 *        'LOCELEM' SUBROUTINE.                                                 00004900
                                   50 * * * * * * * * * * * * * * * * * * * * * * * * * * * * * * * * * * * * * * * * 00005000
00002E 1BFF                        51          SR    @F,@F                ZERO THE LOOP COUNT            0037  00005100
000030 50F0 B0F6          000FC    52          ST    @F,I                                                    0037  00005200
000034 58F0 1000          00000    53 @D09F7   L     @F,0(0,@1)           GET THE SEARCH ARGUMENT        0038  00005300
000038 59F0 5000          00000    54          C     @F,0(0,@5)           DOES IT EQUAL THE TABLE ARG. ? 0038  00005400
00003C 4780 B07C          00082    55          BC    08,FOUND              YES, PRINT THE FUNCTION.      0039  00005500
000040 4740 B042          00048    56          BC    04,STEP               NO, GO LOOK HIGHER IN TABLE.  0041  00005600
000044 13F6                        57          LCR   @F,@6                SET UP TO LOOK LOWER IN TABLE. 0042  00005700
000046 186F                        58          LR    @6,@F                                                   0042  00005800
000048 18F6                        59 STEP     LR    @F,@6                GENERATE                       0043  00005900
00004A 1A5F                        60          AR    @5,@F                 THE NEXT                      0043  00006000
00004C 18F6                        61          LR    @F,@6                  ADDRESS                      0044  00006100
00004E 10FF                        62          LPR   @F,@F                   OF AN ITEM                   0044  00006200
000050 8AF0 0001          00001    63          SRA   @F,1                     TO COMPARE                  0044  00006300
000054 186F                        64          LR    @6,@F                     IN THE TABLE.              0044  00006400
000056 58F0 B0F6          000FC    65          L     @F,I                 BUMP THE LOOP COUNT BY 1.      0045  00006500
00005A 4AF0 B096          0009C    66          AH    @F,@D1                                                  0045  00006600
00005E 50F0 B0F6          000FC    67 @D09F6   ST    @F,I                                                    0045  00006700
000062 49F0 B098          0009E    68          CH    @F,@D2               LOOPED THE REQUIRED TIMES ?    0045  00006800
000066 47C0 B02E          00034    69          BC    12,@D09F7             NO, CONTINUE SEARCHHING.      0045  00006900
                                   70 * * * * * * * * * * * * * * * * * * * * * * * * * * * * * * * * * * * * * * * * 00007000
                                   71 *        NO MATCH FOUND, PRINT A LINE OF ASTERISKS.                            00007100
                                   72 * * * * * * * * * * * * * * * * * * * * * * * * * * * * * * * * * * * * * * * * 00007200
00006A D207 B0FB B0EE 00101 000F4  73          MVC   OUTAREA+1(8),ASTERISK                                   0046  00007300
000070 4110 B0FA          00100    74          LA    @1,OUTAREA                                              0046  00007400
000074 58F0 B09E          000A4    75 PRINTIT  L     @F,@V3               ADDRESS OF PRINT               0046  00007500
000078 05EF                        76          BALR  @E,@F                                                   0046  00007600
00007A 9240 B0FA      00100        77          MVI   OUTAREA,C' '         SINGLE SPACE FROM HERE ON OUT  0046  00007700
00007E 47F0 B012          00018    78          BC    15,TOP3                                                 0047  00007800
                                   79 * * * * * * * * * * * * * * * * * * * * * * * * * * * * * * * * * * * * * * * * 00007900
                                   80 *        MATCH FOUND, PRINT THE FUNCTION PORTION.                              00008000
                                   81 * * * * * * * * * * * * * * * * * * * * * * * * * * * * * * * * * * * * * * * * 00008100
000082 41F0 5008          00008    82 FOUND    LA    @F,8(0,@5)                                              0048  00008200
000086 D207 B0FB F000 00101 00000  83          MVC   OUTAREA+1(8),0(@F)                                      0048  00008300
00008C 47F0 B06E          00074    84          BC    15,PRINTIT           GO PRINT THE LINE.             0048  00008400
                                   85 * * * * * * * * * * * * * * * * * * * * * * * * * * * * * * * * * * * * * * * * 00008500
                                   86 *        TODAY IS A NICE DAY, SO I'M GOING TO GIVE YOU A DUMP, JUST IN         00008600
                                   87 *        CASE YOU MIGHT WANT ONE TO HELP DEBUG THE PROGRAM.                    00008700
                                   88 * * * * * * * * * * * * * * * * * * * * * * * * * * * * * * * * * * * * * * * * 00008800
000090 0000                        89 @EL02    DC    H'0'                                                    0051  00008900
000092 58D0 D004          00004    90          L     @D,4(0,@D)                                              0     00009000
000096 98EC D00C          0000C    91          LM    @E,@C,12(@D)                                            0051  00009100
00009A 07FE                        92          BCR   15,@E                                                   0051  00009200
```

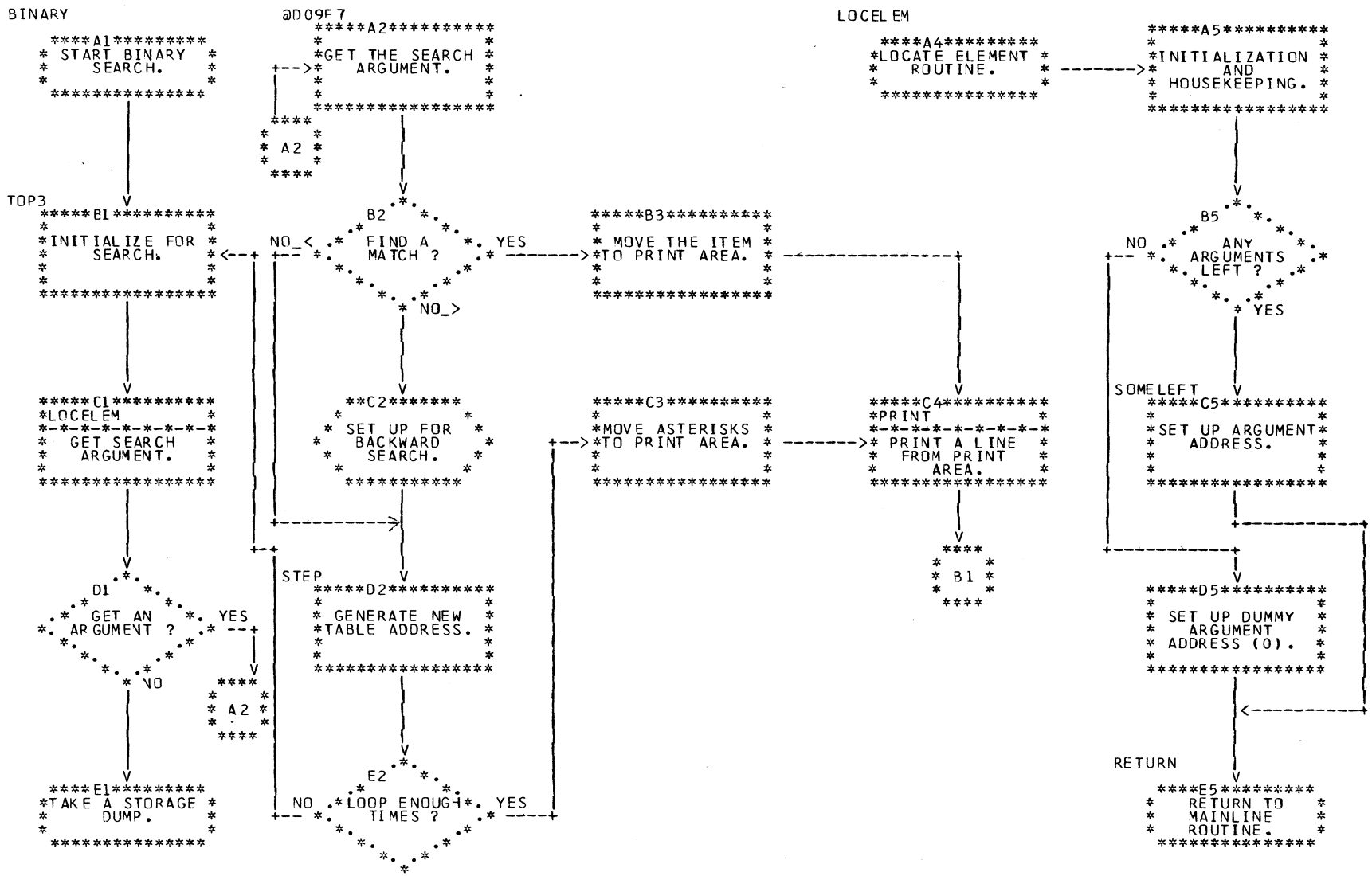
BINARY
A1
START BINARY SEARCH.
@D09F7
A2
GET THE SEARCH ARGUMENT.
A2
TOP3
B1
INITIALIZE FOR SEARCH.
B2
FIND A MATCH ?
NO_<
YES
NO_>
B3
MOVE THE ITEM TO PRINT AREA.
LOCELEM
A4
LOCATE ELEMENT ROUTINE.
A5
INITIALIZATION AND HOUSEKEEPING.
B5
ANY ARGUMENTS LEFT ?
NO
YES
SOMELEFT
C1
LOCELEM
GET SEARCH ARGUMENT.
C2
SET UP FOR BACKWARD SEARCH.
C3
MOVE ASTERISKS TO PRINT AREA.
C4
PRINT
PRINT A LINE FROM PRINT AREA.
B1
C5
SET UP ARGUMENT ADDRESS.
D1
GET AN ARGUMENT ?
YES
NO
A2
STEP
D2
GENERATE NEW TABLE ADDRESS.
D5
SET UP DUMMY ARGUMENT ADDRESS (0).
RETURN
E1
TAKE A STORAGE DUMP.
E2
LOOP ENOUGH TIMES ?
NO
YES
E5
RETURN TO MAINLINE ROUTINE.

```
 LOC  OBJECT CODE    ADDR1 ADDR2  STMT   SOURCE STATEMENT                                                F08APR70   9/17/70
00009C                              116 @DATA1    EQU   *                                                              00011600
000000                              117 @0        EQU   00                  EQUATES FOR REGISTERS 0-15                 00011700
000001                              118 @1        EQU   01                                                             00011800
000002                              119 @2        EQU   02                                                             00011900
000003                              120 @3        EQU   03                                                             00012000
000004                              121 @4        EQU   04                                                             00012100
000005                              122 @5        EQU   05                                                             00012200
000006                              123 @6        EQU   06                                                             00012300
000007                              124 @7        EQU   07                                                             00012400
000008                              125 @8        EQU   08                                                             00012500
000009                              126 @9        EQU   09                                                             00012600
00000A                              127 @A        EQU   10                                                             00012700
00000B                              128 @B        EQU   11                                                             00012800
00000C                              129 @C        EQU   12                                                             00012900
00000D                              130 @D        EQU   13                                                             00013000
00000E                              131 @E        EQU   14                                                             00013100
00000F                              132 @F        EQU   15                                                             00013200
00009C 0001                         133 @D1       DC    H'1'                                                           00013300
00009E 0005                         134 @D2       DC    H'5'                                                           00013400
0000A0 00000000                     135 @V2       DC    V(LOCELEM)                                                     00013500
0000A4 00000000                     136 @V3       DC    V(PRINT)                                                       00013600
0000A8                              137           DS    0F                                                             00013700
0000A8                              138           DS    0D                                                             00013800
0000A8                              139 @DATA     EQU   *                                                              00013900
0000AC                              140 @SAV002   EQU   @DATA+00000004      72 BYTE(S) ON WORD                       00014000
0000F4                              141           ORG   @DATA+00000076                                                 00014100
0000F4                              142 ASTERISK  EQU   *                    8 BYTE(S)                                00014200
0000F4 5C5C5C5C5C5C5C5C             143           DC    C'********'                                                    00014300
0000FC                              144 I         EQU   @DATA+00000084      FULLWORD INTEGER                         00014400
0000A8                              145           ORG   @DATA                                                          00014500
0000A8                              146           DS    00000088C                                                      00014600
000018                              147 @CL9F1    EQU   TOP3                                                           00014700
000100 F140404040404040             148 OUTAREA   DC    CL121'1'                                                       00014800
```

```
LOC   OBJECT CODE    ADDR1 ADDR2  STMT   SOURCE STATEMENT                                                F08APR70   9/17/70

                                  150 * * * * * * * * * * * * * * * * * * * * * * * * * * * * * * * * * * * * * * * * 00015000
                                  151 *        THIS IS THE DATA TABLE USED FOR THE BINARY SEARCH ROUTINE.          00015100
                                  152 *                                                                            00015200
                                  153 *        ONLY THE ITEMS CONTAINING THE WORDS 'THIS '; 'SHOULD '; AND         00015300
                                  154 *        'PRINT '; SHOULD BE SEARCHED FOR BY THE PROGRAM. THE REST,          00015400
                                  155 *        CONTAINING 'DONT USE', ARE JUST PADDING TO FILL THE TABLE           00015500
                                  156 *        OUT TO 63 DATA ITEMS.                                               00015600
                                  157 * * * * * * * * * * * * * * * * * * * * * * * * * * * * * * * * * * * * * * * * 00015700
000179 000000
00017C 00000000                   158 TABLE    DC    F'0'                ARGUMENT                                00015800
000180 C4D6D5E340E4E2C5           159          DC    CL8'DONT USE'       FUNCTION                                00015900
000188 0000000C                   160          DC    F'12'               ARGUMENT                                00016000
00018C C4D6D5E340E4E2C5           161          DC    CL8'DONT USE'       FUNCTION                                00016100
000194 00000018                   162          DC    F'24'               ARGUMENT                                00016200
000198 C4D6D5E340E4E2C5           163          DC    CL8'DONT USE'       FUNCTION                                00016300
0001A0 00000024                   164          DC    F'36'               ARGUMENT                                00016400
0001A4 C4D6D5E340E4E2C5           165          DC    CL8'DONT USE'       FUNCTION                                00016500
0001AC 00000030                   166          DC    F'48'               ARGUMENT                                00016600
0001B0 C4D6D5E340E4E2C5           167          DC    CL8'DONT USE'       FUNCTION                                00016700
0001B8 0000003C                   168          DC    F'60'               ARGUMENT                                00016800
0001BC C4D6D5E340E4E2C5           169          DC    CL8'DONT USE'       FUNCTION                                00016900
0001C4 00000048                   170          DC    F'72'               ARGUMENT                                00017000
0001C8 C4D6D5E340E4E2C5           171          DC    CL8'DONT USE'       FUNCTION                                00017100
0001D0 00000054                   172          DC    F'84'               ARGUMENT                                00017200
0001D4 C4D6D5E340E4E2C5           173          DC    CL8'DONT USE'       FUNCTION                                00017300
0001DC 00000060                   174          DC    F'96'               ARGUMENT                                00017400
0001E0 C4D6D5E340E4E2C5           175          DC    CL8'DONT USE'       FUNCTION                                00017500
0001E8 0000006C                   176          DC    F'108'              ARGUMENT                                00017600
0001EC C4D6D5E340E4E2C5           177          DC    CL8'DONT USE'       FUNCTION                                00017700
0001F4 00000078                   178          DC    F'120'              ARGUMENT                                00017800
0001F8 C4D6D5E340E4E2C5           179          DC    CL8'DONT USE'       FUNCTION                                00017900
000200 00000084                   180          DC    F'132'              ARGUMENT                                00018000
000204 C4D6D5E340E4E2C5           181          DC    CL8'DONT USE'       FUNCTION                                00018100
00020C 00000090                   182          DC    F'144'              ARGUMENT                                00018200
000210 C4D6D5E340E4E2C5           183          DC    CL8'DONT USE'       FUNCTION                                00018300
000218 0000009C                   184          DC    F'156'              ARGUMENT                                00018400
00021C C4D6D5E340E4E2C5           185          DC    CL8'DONT USE'       FUNCTION                                00018500
000224 000000A8                   186          DC    F'168'              ARGUMENT                                00018600
000228 C4D6D5E340E4E2C5           187          DC    CL8'DONT USE'       FUNCTION                                00018700
000230 000000B4                   188          DC    F'180'              ARGUMENT                                00018800
000234 C4D6D5E340E4E2C5           189          DC    CL8'DONT USE'       FUNCTION                                00018900
00023C 000000C0                   190          DC    F'192'              ARGUMENT                                00019000
000240 C4D6D5E340E4E2C5           191          DC    CL8'DONT USE'       FUNCTION                                00019100
000248 000000CC                   192          DC    F'204'              ARGUMENT                                00019200
00024C C4D6D5E340E4E2C5           193          DC    CL8'DONT USE'       FUNCTION                                00019300
000254 000000D8                   194          DC    F'216'              ARGUMENT                                00019400
000258 C4D6D5E340E4E2C5           195          DC    CL8'DONT USE'       FUNCTION                                00019500
000260 000000E4                   196          DC    F'228'              ARGUMENT                                00019600
000264 C4D6D5E340E4E2C5           197          DC    CL8'DONT USE'       FUNCTION                                00019700
00026C 000000F0                   198          DC    F'240'              ARGUMENT                                00019800
000270 C4D6D5E340E4E2C5           199          DC    CL8'DONT USE'       FUNCTION                                00019900
000278 000000FC                   200          DC    F'252'              ARGUMENT                                00020000
00027C C4D6D5E340E4E2C5           201          DC    CL8'DONT USE'       FUNCTION                                00020100
000284 00000108                   202          DC    F'264'                                                      00020200
000288 E3C8C9E240404040           203          DC    CL8'THIS'                                                   00020300
```

```
LOC   OBJECT CODE    ADDR1 ADDR2  STMT   SOURCE STATEMENT                                  F08APR70   9/17/70

000290 00000114                    204          DC    F'276'          ARGUMENT                        00020400
000294 C4D6D5E340E4E2C5            205          DC    CL8'DONT USE'   FUNCTION                        00020500
00029C 00000120                    206          DC    F'288'          ARGUMENT                        00020600
0002A0 C4D6D5E340E4E2C5            207          DC    CL8'DONT USE'   FUNCTION                        00020700
0002A8 0000012C                    208          DC    F'300'          ARGUMENT                        00020800
0002AC C4D6D5E340E4E2C5            209          DC    CL8'DONT USE'   FUNCTION                        00020900
0002B4 00000138                    210          DC    F'312'          ARGUMENT                        00021000
0002B8 C4D6D5E340E4E2C5            211          DC    CL8'DONT USE'   FUNCTION                        00021100
0002C0 00000144                    212          DC    F'324'          ARGUMENT                        00021200
0002C4 C4D6D5E340E4E2C5            213          DC    CL8'DONT USE'   FUNCTION                        00021300
0002CC 00000152                    214          DC    F'338'                                          00021400
0002D0 E2C8D6E4D3C44040            215          DC    CL8'SHOULD'                                     00021500
0002D8 0000015C                    216          DC    F'348'          ARGUMENT                        00021600
0002DC C4D6D5E340E4E2C5            217          DC    CL8'DONT USE'   FUNCTION                        00021700
0002E4 00000168                    218          DC    F'360'          ARGUMENT                        00021800
0002E8 C4D6D5E340E4E2C5            219          DC    CL8'DONT USE'   FUNCTION                        00021900
0002F0 00000174                    220          DC    F'372'          ARGUMENT                        00022000
0002F4 C4D6D5E340E4E2C5            221          DC    CL8'DONT USE'   FUNCTION                        00022100
0002FC 00000180                    222          DC    F'384'          ARGUMENT                        00022200
000300 C4D6D5E340E4E2C5            223          DC    CL8'DONT USE'   FUNCTION                        00022300
000308 0000018C                    224          DC    F'396'          ARGUMENT                        00022400
00030C C4D6D5E340E4E2C5            225          DC    CL8'DONT USE'   FUNCTION                        00022500
000314 00000198                    226          DC    F'408'          ARGUMENT                        00022600
000318 C4D6D5E340E4E2C5            227          DC    CL8'DONT USE'   FUNCTION                        00022700
000320 000001A4                    228          DC    F'420'          ARGUMENT                        00022800
000324 C4D6D5E340E4E2C5            229          DC    CL8'DONT USE'   FUNCTION                        00022900
00032C 000001B0                    230          DC    F'432'          ARGUMENT                        00023000
000330 C4D6D5E340E4E2C5            231          DC    CL8'DONT USE'   FUNCTION                        00023100
000338 000001BC                    232          DC    F'444'          ARGUMENT                        00023200
00033C C4D6D5E340E4E2C5            233          DC    CL8'DONT USE'   FUNCTION                        00023300
000344 000001C8                    234          DC    F'456'          ARGUMENT                        00023400
000348 C4D6D5E340E4E2C5            235          DC    CL8'DONT USE'   FUNCTION                        00023500
000350 000001D4                    236          DC    F'468'          ARGUMENT                        00023600
000354 C4D6D5E340E4E2C5            237          DC    CL8'DONT USE'   FUNCTION                        00023700
00035C 000001E0                    238          DC    F'480'          ARGUMENT                        00023800
000360 C4D6D5E340E4E2C5            239          DC    CL8'DONT USE'   FUNCTION                        00023900
000368 000001EC                    240          DC    F'492'          ARGUMENT                        00024000
00036C C4D6D5E340E4E2C5            241          DC    CL8'DONT USE'   FUNCTION                        00024100
000374 000001F8                    242          DC    F'504'          ARGUMENT                        00024200
000378 C4D6D5E340E4E2C5            243          DC    CL8'DONT USE'   FUNCTION                        00024300
000380 00000204                    244          DC    F'516'          ARGUMENT                        00024400
000384 C4D6D5E340E4E2C5            245          DC    CL8'DONT USE'   FUNCTION                        00024500
00038C 00000210                    246          DC    F'528'          ARGUMENT                        00024600
000390 C4D6D5E340E4E2C5            247          DC    CL8'DONT USE'   FUNCTION                        00024700
000398 0000021C                    248          DC    F'540'          ARGUMENT                        00024800
0003A0 C4D6D5E340E4E2C5            249          DC    CL8'DONT USE'   FUNCTION                        00024900
0003A4 00000228                    250          DC    F'552'          ARGUMENT                        00025000
0003A8 C4D6D5E340E4E2C5            251          DC    CL8'DONT USE'   FUNCTION                        00025100
0003B0 0000022E                    252          DC    F'558'                                          00025200
0003B4 D7D9C9D5E3404040            253          DC    CL8'PRINT'                                      00025300
0003BC 00000240                    254          DC    F'576'          ARGUMENT                        00025400
0003C0 C4D6D5E340E4E2C5            255          DC    CL8'DONT USE'   FUNCTION                        00025500
0003C8 0000024C                    256          DC    F'588'          ARGUMENT                        00025600
0003CC C4D6D5E340E4E2C5            257          DC    CL8'DONT USE'   FUNCTION                        00025700
0003D4 00000258                    258          DC    F'600'          ARGUMENT                        00025800
```

```
 LOC  OBJECT CODE    ADDR1 ADDR2  STMT   SOURCE STATEMENT                                                F08APR70   9/17/70

0003D8 C4D6D5E340E4E2C5            259          DC    CL8'DONT USE'       FUNCTION                                00025900
0003E0 00000264                    260          DC    F'612'              ARGUMENT                                00026000
0003E4 C4D6D5E340E4E2C5            261          DC    CL8'DONT USE'       FUNCTION                                00026100
0003EC 00000270                    262          DC    F'624'              ARGUMENT                                00026200
0003F0 C4D6D5E340E4E2C5            263          DC    CL8'DONT USE'       FUNCTION                                00026300
0003F8 0000027C                    264          DC    F'636'              ARGUMENT                                00026400
0003FC C4D6D5E340E4E2C5            265          DC    CL8'DONT USE'       FUNCTION                                00026500
000404 00000288                    266          DC    F'648'              ARGUMENT                                00026600
000408 C4D6D5E340E4E2C5            267          DC    CL8'DONT USE'       FUNCTION                                00026700
000410 00000294                    268          DC    F'660'              ARGUMENT                                00026800
000414 C4D6D5E340E4E2C5            269          DC    CL8'DONT USE'       FUNCTION                                00026900
00041C 000002A0                    270          DC    F'672'              ARGUMENT                                00027000
000420 C4D6D5E340E4E2C5            271          DC    CL8'DONT USE'       FUNCTION                                00027100
000428 000002AC                    272          DC    F'684'              ARGUMENT                                00027200
00042C C4D6D5E340E4E2C5            273          DC    CL8'DONT USE'       FUNCTION                                00027300
000434 000002B8                    274          DC    F'696'              ARGUMENT                                00027400
000438 C4D6D5E340E4E2C5            275          DC    CL8'DONT USE'       FUNCTION                                00027500
000440 000002C4                    276          DC    F'708'              ARGUMENT                                00027600
000444 C4D6D5E340E4E2C5            277          DC    CL8'DONT USE'       FUNCTION                                00027700
00044C 000002D0                    278          DC    F'720'              ARGUMENT                                00027800
000450 C4D6D5E340E4E2C5            279          DC    CL8'DONT USE'       FUNCTION                                00027900
000458 000002DC                    280          DC    F'732'              ARGUMENT                                00028000
00045C C4D6D5E340E4E2C5            281          DC    CL8'DONT USE'       FUNCTION                                00028100
000464 000002E8                    282          DC    F'744'              ARGUMENT                                00028200
000468 C4D6D5E340E4E2C5            283          DC    CL8'DONT USE'       FUNCTION                                00028300

                                   285 ***********************************************************************  00028500
                                   286 *                                                                        00028600
                                   287 *        THIS IS THE SUBROUTINE WHICH PASSES THE SEARCH ARGUMENTS TO     00028700
                                   288 *        THE MAIN ROUTINE. THE ARGUMENTS ARE CONTAINED IN THE TABLE      00028800
                                   289 *        CALLED 'LOOKUP'.                                                00028900
                                   290 *                                                                        00029000
                                   291 ***********************************************************************  00029100
000470                             292 LOCELEM  CSECT                                                          00029200
000470 90EC D00C          0000C    293          STM   @E,@C,12(@D)                                             00029300
000474 0500                        294          BALR  @C,@0                                                    00029400
000476                             295          USING LOCELEM+00000006,@C                                      00029500
000476 9857 C022          00498    296          LM    @5,@7,CONSTANT                                           00029600
00047A 1255                        297          LTR   @5,@5                 IS DUMMY STILL COMING BACK ??    00029700
00047C 4780 C014          0048A    298          BC    C8,RETURN              YES, GIVE HIM NOTHING.            00029800
000480 8756 C010          00486    299          BXLE  @5,@6,SOMELEFT        STILL SOME LEFT, GIVE HIM ARGUMENT 00029900
000484 1B55                        300          SR    @5,@5                 NONE LEFT, GIVE ZERO ADDRESS.     00030000
000486 9057 C022          00498    301 SOMELEFT STM   @5,@7,CONSTANT        SAVE DATA FOR NEXT TIME.          00030100
00048A 1815                        302 RETURN   LR    @1,@5                                                  00030200
00048C 98E0 D00C          0000C    303          LM    @E,@0,12(@D)                                           00030300
000490 982C D01C          0001C    304          LM    @2,@C,28(@D)                                           00030400
000494 07FE                        305          BCR   15,@E                                                  00030500

000496 0000
000498 000004A000000004            307 CONSTANT DC    A(LOOKUP-4,4,LOOKUPND-1)                               00030700
0004A4 0000010800000152            308 LOOKUP   DC    F'264,338,558'                                         00030800
0004B0                             309 LOOKUPND EQU   *                                                      00030900
                                   310          END                                                           00031000
```

9/17/70

| POS.ID | REL.ID | FLAGS | ADDRESS |
|---|---|---|---|
| 01 | 02 | 1C | 0000A0 |
| 01 | 03 | 1C | 0000A4 |
| 04 | 04 | 0C | 000498 |
| 04 | 04 | 0C | 0004A0 |

9/17/70

| SYMBOL | LEN | VALUE | DEFN | REFERENCES | | | | | | | | | | | | | | |
|---|---|---|---|---|---|---|---|---|---|---|---|---|---|---|---|---|---|---|
| @A | 00001 | 00000A | 00127 | | | | | | | | | | | | | | | |
| @B | 00001 | 00000B | 00128 | 0029 | 0030 | | | | | | | | | | | | | |
| @C | 00001 | 00000C | 00129 | 0028 | 0091 | 0293 | 0294 | 0295 | 0304 | | | | | | | | | |
| @CL9F1 | 00004 | 000018 | 00147 | | | | | | | | | | | | | | | |
| @D | 00001 | 00000D | 00130 | 0028 | 0031 | 0033 | 0034 | 0090 | 0090 | 0091 | 0293 | 0303 | 0304 | | | | | |
| @DATA | 00001 | 0000A8 | 00139 | 0140 | 0141 | 0144 | 0145 | | | | | | | | | | | |
| @DATA1 | 00001 | 00009C | 00116 | | | | | | | | | | | | | | | |
| @DO9F6 | 00004 | 00005E | 00067 | | | | | | | | | | | | | | | |
| @DO9F7 | 00004 | 000034 | 00053 | 0069 | | | | | | | | | | | | | | |
| @D1 | 00002 | 00009C | 00133 | 0066 | | | | | | | | | | | | | | |
| @D2 | 00002 | 00009E | 00134 | 0068 | | | | | | | | | | | | | | |
| @E | 00001 | 00000E | 00131 | 0028 | 0041 | 0076 | 0091 | 0092 | 0293 | 0303 | 0305 | | | | | | | |
| @ELO2 | 00002 | 000090 | 00089 | 0043 | | | | | | | | | | | | | | |
| @F | 00001 | 00000F | 00132 | 0032 | 0033 | 0034 | 0040 | 0041 | 0051 | 0051 | 0052 | 0053 | 0054 | 0057 | 0058 | 0059 | 0060 | 0061 |
| | | | | 0062 | 0062 | 0063 | 0064 | 0065 | 0066 | 0067 | 0068 | 0075 | 0076 | 0082 | 0083 | | | |
| @SAV002 | 00001 | 0000AC | 00140 | 0031 | 0032 | | | | | | | | | | | | | |
| @V2 | 00004 | 0000A0 | 00135 | 0040 | | | | | | | | | | | | | | |
| @V3 | 00004 | 0000A4 | 00136 | 0075 | | | | | | | | | | | | | | |
| @0 | 00001 | 000000 | 00117 | 0029 | 0294 | 0303 | | | | | | | | | | | | |
| @1 | 00001 | 000001 | 00118 | 0042 | 0042 | 0053 | 0074 | 0302 | | | | | | | | | | |
| @2 | 00001 | 000002 | 00119 | 0304 | | | | | | | | | | | | | | |
| @3 | 00001 | 000003 | 00120 | | | | | | | | | | | | | | | |
| @4 | 00001 | 000004 | 00121 | | | | | | | | | | | | | | | |
| @5 | 00001 | 000005 | 00122 | 0038 | 0039 | 0054 | 0060 | 0082 | 0296 | 0297 | 0297 | 0299 | 0300 | 0300 | 0301 | 0302 | | |
| @6 | 00001 | 000006 | 00123 | 0037 | 0057 | 0058 | 0059 | 0061 | 0064 | 0299 | | | | | | | | |
| @7 | 00001 | 000007 | 00124 | 0035 | 0039 | 0296 | 0301 | | | | | | | | | | | |
| @8 | 00001 | 000008 | 00125 | | | | | | | | | | | | | | | |
| @9 | 00001 | 000009 | 00126 | | | | | | | | | | | | | | | |
| ASTERISK | 00001 | 0000F4 | 00142 | 0073 | | | | | | | | | | | | | | |
| BINARY | 00001 | 000000 | 00027 | 0030 | | | | | | | | | | | | | | |
| CONSTANT | 00004 | 000498 | 00307 | 0296 | 0301 | | | | | | | | | | | | | |
| FOUND | 00004 | 000082 | 00082 | 0055 | | | | | | | | | | | | | | |
| I | 00001 | 0000FC | 00144 | 0052 | 0065 | 0067 | | | | | | | | | | | | |
| LOCELEM | 00001 | 000470 | 00292 | 0295 | | | | | | | | | | | | | | |
| LOOKUP | 00004 | 0004A4 | 00308 | 0307 | | | | | | | | | | | | | | |
| LOOKUPND | 00001 | 0004B0 | 00309 | 0307 | | | | | | | | | | | | | | |
| OUTAREA | 00121 | 000100 | 00148 | 0073 | 0074 | 0077 | 0083 | | | | | | | | | | | |
| PRINTIT | 00004 | 000074 | 00075 | 0084 | | | | | | | | | | | | | | |
| RETURN | 00002 | 00048A | 00302 | 0298 | | | | | | | | | | | | | | |
| SOMELEFT | 00004 | 000486 | 00301 | 0299 | | | | | | | | | | | | | | |
| STEP | 00002 | 000048 | 00059 | 0056 | | | | | | | | | | | | | | |
| TABLE | 00004 | 00017C | 00158 | 0035 | | | | | | | | | | | | | | |
| TOP3 | 00004 | 000018 | 00037 | 0078 | 0147 | | | | | | | | | | | | | |

NO STATEMENTS FLAGGED IN THIS ASSEMBLY
*STATISTICS* SOURCE RECORDS (SYSIN) = 310
*OPTIONS IN EFFECT* LIST, NODECK, LOAD, NORENT, XREF, NOTEST, ALGN, OS, LINECNT = 55
382 PRINTED LINES

```
 F44-LEVEL LINKAGE EDITOR OPTIONS SPECIFIED MAP,LET,LIST,NCAL
           VARIABLE OPTIONS USED -  SIZE=(45056,6144)-          DEFAULT OPTION(S) USED
IEW0000              ENTRY UTILITY


                                                    MODULE MAP


  CONTROL SECTION                          ENTRY

    NAME     ORIGIN  LENGTH                  NAME   LOCATION     NAME   LOCATION     NAME   LOCATION     NAME   LOCATION

  BINARY        00     470
  LOCELEM      470      40
  UTILITY      4B0     5A0
                                           PRINT        512    PCHKRETN     76E

 ENTRY ADDRESS       4B0
 TOTAL LENGTH        A50

****GO        DOES NOT EXIST BUT HAS BEEN ADDED TO DATA SET
```

```
F.P. REGS.  00.01D248 000000B8   01.C60A00 D000F891   E2.E3D6D9 7CE3C1F2   00.000000 0C000000

REGS 0-7     FFFFFF2E 00000000 0001CE1C 00000000    00015110 0003F0AC 000000C0 0003EF2C
REGS 8-15    0001CE00 00000000 0001CE28 6F03EDB6    4007ECA2 0003EE5C 6F03EDD8 0003F220

000000    00000000 C0000000 00000000 00000000    0003EDB0 00000000 FF060000 80000000  *................................*
000020    FF040003 4007803A FFD50001 4F03EE42    0000FF00 00000000 FE040234 80000A06  *.... ....N......................*
000040    C0001360 08000000 000014D0 00005920    02C027A4 0000996C 00040000 00007498  *................................*
000060    00040000 00007BC8 00040000 00007588    00000000 00012D10 C0040000 0000751A  *.......H........................*

03EDA0    98EF9CC6 58109CCE D7039BEE 9BEED701    90ECD00C 05BC50D0 B0AA41F0 B0A650F0  *...F....P.....P............0...0*
03EDC0    D00818DF 4170B176 416000C0 41500180    1A5758F0 B09A05EF 12114780 B08A1BFF  *....................0...........*
03EDE0    50F0B0F6 58F01000 59F05C00 4780B07C    4740B042 13F6186F 18F61A5F 18F610FF  *.0.6.0...0....... ...6...6...6..*
03EE00    8AF00001 186F58FC B0F64AF0 B09650F0    B0F649F0 B09847C0 B02ED207 B0FBB0EE  *.0.....0.6.0...0.6.0......K.....*
03EE20    4110B0FA 58F0B09E 05EF9240 B0FA47F0    B01241F0 50C8D207 B0FBF000 47F0B06E  *.....0..... ...0...0..K...0..0..*
03EE40    000C58DC D00498EC D00C07FE 00010005    0003F220 0003F2C2 60124710 92E4921C  *...................2...2B.....U..*
03EE60    0004AF68 0003F5E0 6F03EDD8 0003F220    FFFFFF2E 0003EEB0 0001CE1C 000000C0  *......5....Q..2..................*
03EE80    0001511C 0003F0AC 000000C0 0003EF2C    0001CE00 00000000 0001CE28 6F03EDB6  *......0..........................*
03EEA0    4007ECA2 5C5C5C5C 5C5C5C5C 00000C06    405C5C5C 5C5C5C5C 5C404040 40404040  * ............... ........        *
03EEC0    40404040 40404040 40404040 40404040    40404040 40404040 404C4040 40404040  *                                 *
03EEE0    40404040 40404040 40404040 40404040    40404040 40404040 40404040 40404040  *                                 *
03EF00    40404040 40404040 40404040 40404040    40404040 40404040 40404040 40404040  *                                 *
03EF20    40404040 40404040 40000000 00000000    C4D6D5E3 40E4E2C5 0000000C C4D6D5E3  *          .......DONT USE....DONT*
03EF40    40E4E2C5 000C0018 C4D6D5E3 40E4E2C5    00000024 C4D6D5E3 40E4E2C5 0000003C  * USE....DONT USE....DONT USE....*
03EF60    C4D6D5E3 40E4E2C5 0000003C C4D6D5E3    40E4E2C5 00000048 C4D6D5E3 40E4E2C5  *DONT USE....DONT USE....DONT USE*
03EF80    00000054 C4D6D5E3 40E4E2C5 00000060    C4D6D5E3 40E4E2C5 0000006C C4D6D5E3  *....DONT USE....DONT USE....DONT*
03EFA0    40E4E2C5 00000078 C4D6D5E3 40E4E2C5    00000084 C4D6D5E3 40E4E2C5 00000090  * USE....DONT USE....DONT USE....*
03EFC0    C4D6D5E3 40E4E2C5 0000009C C4D6D5E3    40E4E2C5 000000A8 C4D6D5E3 40E4E2C5  *DONT USE....DONT USE....DONT USE*
03FFE0    000000B4 C4D6D5E3 40E4E2C5 000000C0    C4D6D5E3 40E4E2C5 000000CC C4D6D5E3  *....DONT USE....DONT USE....DONT*
03F000    40E4E2C5 000000D8 C4D6D5E3 40E4E2C5    000000E4 C4D6D5E3 40E4E2C5 000000F0  * USE...QDONT USE...UDONT USE...0*
03F020    C4D6D5E3 40E4E2C5 000000FC C4D6D5E3    40E4E2C5 00000108 E3C8C9E2 40404040  *DONT USE....DONT USE....THIS    *
03F040    00000114 C4D6D5E3 40E4E2C5 00000120    C4D6D5E3 40E4E2C5 0000012C C4D6D5E3  *....DONT USE....DONT USE....DONT*
03F060    40E4E2C5 00000138 C4D6D5E3 40E4E2C5    00000144 C4D6D5E3 40E4E2C5 00000152  * USE....DONT USE....DONT USE....*
03F080    E2C8D6E4 D3C44040 0000015C C4D6D5E3    40E4E2C5 00000168 C4D6D5E3 40E4E2C5  *SHOULD  ....DONT USE....DONT USE*
03F0A0    00000174 C4D6D5E3 40E4E2C5 00000180    C4D6D5E3 40E4E2C5 0000018C C4D6D5E3  *....DONT USE....DONT USE....DONT*
03F0C0    40E4E2C5 00000198 C4D6D5E3 40E4E2C5    000001A4 C4D6D5E3 40E4E2C5 000001B0  * USE....DONT USE....DONT USE....*
03F0E0    C4D6D5E3 40E4E2C5 000001BC C4D6D5E3    40E4E2C5 000001C8 C4D6D5E3 40E4E2C5  *DONT USE....DONT USE...HDONT USE*
03F100    000001D4 C4D6D5E3 40E4E2C5 000001E0    C4D6D5E3 40E4E2C5 000001EC C4D6D5E3  *...MDONT USE....DONT USE....DONT*
03F120    40E4E2C5 000001F8 C4D6D5E3 40E4E2C5    00000204 C4D6D5E3 40E4E2C5 00000210  * USE...8DONT USE....DONT USE....*
03F140    C4D6D5E3 40E4E2C5 0000021C C4D6D5E3    40E4E2C5 00000228 C4D6D5E3 40E4E2C5  *DONT USE....DONT USE....DONT USE*
03F160    0000022E D7D9C9D5 E3404040 00000240    C4D6D5E3 40E4E2C5 0000024C C4D6D5E3  *....PRINT   ... DONT USE....DONT*
03F180    40E4E2C5 00000258 C4D6D5E3 40E4E2C5    00000264 C4D6D5E3 40E4E2C5 00000270  * USE....DONT USE....DONT USE....*
03F1A0    C4D6D5E3 40E4E2C5 0000027C C4D6D5E3    40E4E2C5 00000288 C4D6D5E3 40E4E2C5  *DONT USE....DONT USE....DONT USE*
03F1C0    00000294 C4D6D5E3 40E4E2C5 000002A0    C4D6D5E3 40E4E2C5 000002AC C4D6D5E3  *....DONT USE....DONT USE....DONT*
03F1E0    40E4E2C5 000002B8 C4D6D5E3 40F4E2C5    000002C4 C4D6D5E3 40E4E2C5 000002DC  * USE....DONT USE...DDONT USE....*
03F200    C4D6D5E3 40E4E2C5 000002DC C4D6D5E3    40E4E2C5 000002E8 C4D6D5E3 40E4E2C5  *DONT USE....DONT USE...YDONT USE*
03F220    9CECD00C 05C09857 C0221255 4780C014    8756C010 1B559057 C0221815 98ECD00C  *................................*
03F240    982CD01C 07FE0000 00000000 00000004    0003F25F 00000108 00000152 000C022E  *...................2............*
03F260    90ECD00C 05C004F0 07004110 C0100511    0FC3F304 7FFF0A0E 58B00010 9110B074  *.......0..........3.............*

03F820    50401010 4340A008 12444780 885C4820    A00E5420 8A9E4780 87FC0620 5A20B010  *. ... ........................*
```



**********

```
 SSSSSSSSSS   OOOOOOOOOOOO  RRRRRRRRRRR   TTTTTTTTTTTT   SSSSSSSSSS
SSSSSSSSSSS   OOOOOOOOOOOO  RRRRRRRRRRRR  TTTTTTTTTTTT  SSSSSSSSSSS
SS        SS  OO        OO  RR        RR       TT       SS        SS
SS            OO        OO  RR        RR       TT       SS
SSS           OO        OO  RR        RR       TT       SSS
 SSSSSSSSS    OO        OO  RRRRRRRRRRRR       TT        SSSSSSSSS
  SSSSSSSS    OO        OO  RRRRRRRRRRRR       TT         SSSSSSSS
         SSS  OO        OO  RR    RR           TT                SSS
          SS  OO        OO  RR     RR          TT                 SS
SS        SS  OO        OO  RR      RR         TT       SS        SS
SSSSSSSSSSS   OOOOOOOOOOOO  RR       RR        TT       SSSSSSSSSSS
 SSSSSSSSSS   OOOOOOOOOOOO  RR        RR       TT        SSSSSSSSSS
```

```
WW        WW  PPPPPPPPPPP
WW        WW  PPPPPPPPPPPP
WW        WW  PP        PP
WW        WW  PP        PP
WW        WW  PP        PP
WW        WW  PPPPPPPPPPPP
WW   WW   WW  PPPPPPPPPPP
WW  WWWW  WW  PP
WW WW  WW WW  PP
WWWW    WWWW  PP
WWW      WWW  PP
WW        WW  PP
```

```
 9999999999
999999999999
99        99
99        99
99        99
999999999999
999999999999
          99
          99
99        99
999999999999
 9999999999
```



**********

```
SYMBOL   TYPE ID  ADDR   LENGTH LD ID

SORTTECH  SD  01 000000 000204
PCHKRETN  ER  02
```

```
 LOC  OBJECT CODE    ADDR1 ADDR2  STMT   SOURCE STATEMENT                                                F08APR70   9/16/70

000000                                1 SORTTECH CSECT                                                      00000100
                                      2          COPY  MHMBEGIN                                             00000200
000000                                3 R0       EQU   0                                                    00000700
000001                                4 R1       EQU   1                                                    00000800
000002                                5 R2       EQU   2                                                    00000900
000003                                6 R3       EQU   3                                                    00001000
000004                                7 R4       EQU   4                                                    00001100
000005                                8 R5       EQU   5                                                    00001200
000006                                9 R6       EQU   6                                                    00001300
000007                               10 R7       EQU   7                                                    00001400
000008                               11 R8       EQU   8                                                    00001500
000009                               12 R9       EQU   9                                                    00001600
00000A                               13 R10      EQU   10                                                   00001700
00000B                               14 R11      EQU   11                                                   00001800
00000C                               15 R12      EQU   12                                                   00001900
00000D                               16 R13      EQU   13                                                   00002000
00000E                               17 R14      EQU   14                                                   00002100
00000F                               18 R15      EQU   15                                                   00002200
000000 90EC D00C            00000C   19          STM   R14,R12,12(R13)     SAVE THE CALLER'S REGISTERS      00002400
000004 05C0                          20          BALR  R12,0               ESTABLISH PROGRAM BASE           00002500
000006                               21          USING *,R12               LET THE ASSEMBLER KNOW.          00002600
000006 41F0 C1B6            001BC    22          LA    R15,SAVEAREA        ADDRESS OF MY SAVE AREA          00002700
00000A 50FD 0008            00008    23          ST    R15,8(R13)          BACKWARD CHAIN                   00002800
00000E 50DF 0004            00004    24          ST    R13,4(R15)          FORWARD CHAIN                    00002900
000012 18DF                          25          LR    R13,R15             ESTABLISH MY SAVE AREA           00003000
000014 D703 D008 D008 00008 00008    26          XC    8(4,R13),8(R13)     TERMINATE THE FORWARD CHAIN      00003100
                                     27 *        END OF STANDARD ENTRY LINKAGE CONVENTIONS.                   00003200
                                     28          PRINT OFF                                                    00000300
```

```
LOC  OBJECT CODE    ADDR1 ADDR2  STMT   SOURCE STATEMENT                                          F08APR70   9/16/70

                                  35 ***********************************************************************  00001000
                                  36 *                                                                       00001100
                                  37 *        THIS IS AN EXAMPLE OF THE "SELECTION" METHOD OF SORTING.       00001200
                                  38 *                                                                       00001300
                                  39 *        BASICALLY, THIS SORT COMPARES EACH ITEM IN THE LIST AGAINST    00001400
                                  40 *        THE FIRST IN THE LIST. WHENEVER THE FIRST IS LARGER THAN       00001500
                                  41 *        THE OTHER, THEY ARE EXCHANGED. AT THE COMPLETION OF A          00001600
                                  42 *        SINGLE PASS THROUGH THE LIST (CALLED A "SCAN"), THE SMALLEST   00001700
                                  43 *        ITEM HAS BEEN MOVED TO THE FIRST POSITION IN THE LIST.         00001800
                                  44 *        THE NEXT "SCAN" IS STARTED WITH THE NEXT (SECOND) POSITION     00001900
                                  45 *        IN THE LIST. CONSIDER THE FOLLOWING:                           00002000
                                  46 *                                                                       00002100
                                  47 *        LEGEND: EACH VERTICAL COLUMN SHOWS THE ORDER OF THE LIST AT    00002200
                                  48 *                THE END OF A SCAN. THE ORDER PROCEEDS FROM LEFT TO     00002300
                                  49 *                RIGHT. SCAN #0 IS THE ORIGINAL VALUE OF THE LIST.      00002400
                                  50 *                THE + SIGN TO THE LEFT OF A NUMBER INDICATES THE       00002500
                                  51 *                STARTING POINT FOR THE NEXT SCAN.                      00002600
                                  52 *                                                                       00002700
                                  53 *        SCAN #0   #1   #2   #3   #4   #5                               00002800
                                  54 *                                                                       00002900
                                  55 *        *    +5    1    1    1    1    1  N = THE NUMBER OF ITEMS IN LIST.  00003000
                                  56 *        D     6   +6    2    2    2    2                               00003100
                                  57 *        A     4    5   +6    3    3    3  NUMBER OF SCANS = N-1.        00003200
                                  58 *        T     1    4    5   +6    4    4  NUMBER OF COMPARES = N(N-1)/2. 00003300
                                  59 *        A     2    2    4    5   +6    5  MAXIMUM NUMBER OF DATA MOVES   00003400
                                  60 *        *     3    3    3    4    5    6   = N(N-1)/2.                  00003500
                                  61 *                                                                       00003600
                                  62 ***********************************************************************  00003700
```

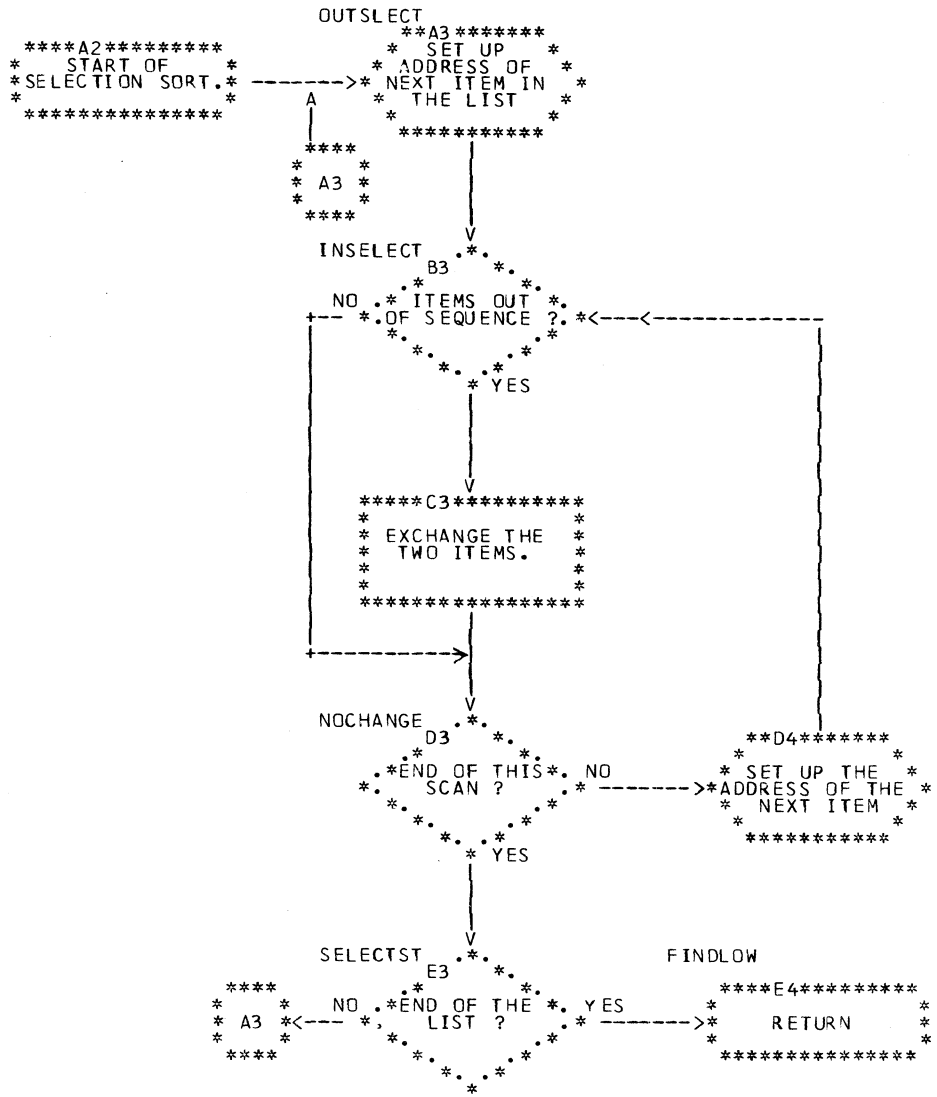
A2
START OF SELECTION SORT.
OUTSELECT
A3
SET UP ADDRESS OF NEXT ITEM IN THE LIST
A
A3
INSELECT
B3
NO
ITEMS OUT OF SEQUENCE ?
YES
C3
EXCHANGE THE TWO ITEMS.
NOCHANGE
D3
END OF THIS SCAN ?
NO
D4
SET UP THE ADDRESS OF THE NEXT ITEM
YES
SELECTST
E3
NO
END OF THE LIST ?
YES
A3
FINDLOW
E4
RETURN

```
LOC   OBJECT CODE     ADDR1 ADDR2  STMT   SOURCE STATEMENT                                                F08APR70   9/16/70

                                    75 ***********************************************************************  00005000
                                    76 *                                                                       00005100
                                    77 *         THIS ROUTINE USES THE "SELECTION" METHOD OF SORTING TO SORT   00005200
                                    78 *         A LIST OF HALF-WORD BINARY QUANTITIES INTO ASCENDING ORDER.   00005300
                                    79 *         A DUMP WILL BE TAKEN AT THE END OF THE ROUTINE TO VALIDATE    00005400
                                    80 *         THE SORT BY CHECKING THE LIST IN THE DUMP.                    00005500
                                    81 *                                                                       00005600
                                    82 ***********************************************************************  00005700


                                    84 *                                                                       00005900
                                    85 *         INITIALIZE THE LOOP CONTROLLING REGISTERS.                    00006000
                                    86 *                                                                       00006100
00002A 4120 C074            0007A   87           LA    R2,SELECTND-L'SELECT   ADDR. OF LAST ENTRY             00006200
00002E 483C C076            0007C   88           LH    R3,#OFSCANS            NUMBER OF SCANS TO BE MADE.     00006300
000032 4140 C06A            00070   89           LA    R4,SELECT              ADDR. OF LOW END OF LIST.       00006400
000036 4154 0002            00002   90 OUTSLECT  LA    R5,L'SELECT(R4)        NEXT ITEM IN LIST.              00006500
00003A D501 4000 5000 00000 00000   91 INSELECT  CLC   0(L'SELECT,R4),0(R5)   OUT OF SEQUENCE ??             00006600
000040 4740 C050            00056   92           BL    NOCHANGE               NO.                             00006700
000044 D201 C078 4000 0007E 00000   93           MVC   SELECTMP,0(R4)         YES, EXCHANGE                   00006800
00004A D201 4000 5000 00000 00000   94           MVC   0(L'SELECT,R4),0(R5)    THE TWO                        00006900
000050 D201 5000 C078 00000 0007E   95           MVC   0(L'SELECT,R5),SELECTMP ITEMS.                         00007000
000056 1952                         96 NOCHANGE  CR    R5,R2                  END OF THIS SCAN ??             00007100
000058 47B0 C05E            00064   97           BNL   SELECTST               YES.                            00007200
00005C 4155 0002            00002   98           LA    R5,L'SELECT(R5)        NO, POINT TO NEXT IN LIST       00007300
000060 47F0 C034            0003A   99           B     INSELECT                AND CONTINUE THE SCAN.         00007400
000064 4144 0002            00002  100 SELECTST  LA    R4,L'SELECT(R4)        SET NEW LOW END OF LIST.        00007500
000068 4630 C030            00036  101           BCT   R3,OUTSLECT            IF NOT FINISHED, BEGIN NEW SCAN. 00007600
00006C 47F0 CC7A            00080  102           B     FINDLOW                SKIP AROUND TABLES.             00007700

000070 0043003A0062002D            104 SELECT   DC    H'67,58,98,45,3,09'                                    00007900
00007C                             105 SELECTND EQU   *                                                      00008000
000C7C 0005                        106 #OFSCANS DC    AL2(((SELECTND-SELECT)/L'SELECT)-1)                    00008100
00007E                             107 SELECTMP DS    H                                                      00008200
000080 0000                        108 FINDLOW  DC    H'0'                   DUMP TO VERIFY SORT             00008300

                                   110 ***********************************************************************  00008500
                                   111 *                                                                       00008600
                                   112 *         ANSWER THESE QUESTIONS ABOUT THE SELECTING TECHNIQUE AND      00008700
                                   113 *         CODING EXAMPLE. WRITE YOUR ANSWERS IN THE LEFT MARGIN.        00008800
                                   114 *                                                                       00008900
                                   115 *         1. WHAT WOULD BE THE RESULTS OF THE SORT IF THE BRANCH AT     00009000
                                   116 *            'INSELECT+6' WERE 'BH' RATHER THAN 'BL' ?                  00009100
                                   117 *                                                                       00009200
                                   118 *         2. USING THE DATA IN 'SELECT', HOW MANY TIMES WILL THE 3      00009300
                                   119 *            'MVC' INSTRUCTIONS BE EXECUTED DURING THE FIRST SCAN ?     00009400
                                   120 *                                                                       00009500
                                   121 *         3. WHAT POSITION IN THE LIST WILL THE 58 OCCUPY AFTER SCAN 2 ? 00009600
                                   122 *                                                                       00009700
                                   123 ******** WHEN YOU HAVE ANSWERED THESE QUESTIONS, DISPLAY THE GREEN SIDE 00009800
                                   124 *         OF YOUR "ANSWER CUE".                                         00009900
                                   125 *                                                                       00010000
                                   126 ***********************************************************************  00010100
```

```
F.P. REGS.  00.01CD20 0001D5C8   40.04D132 00000050   FD.000000 00000000   00.12C002 00C00000

REGS 0-7     FFFFFF2E 0004EFF8 000428D2 00000000    000428D2 000428D2 0001CD68 0001AA48
REGS 8-15    0001D5C8 00000000 0001D5F0 00000000    6F04285E 00042A14 0000C7D4 00042D1E

000000    00000000 00000000 00000000 00000000    00042858 00000000 FF040080 A000A93C  *................................*
000020    00040003 50006A3E FFA50001 4F0428DA    0000FF00 00000000 FE04000F 80000A1E  *................................*
000040    0007CD98 08000000 000014D0 00005920    02C03BA4 0000996C 00040000 00007498  *................................*
000060    00040000 00007BC8 00040000 00007588    00000000 00012D10 00040000 0000751A  *.......H........................*

042840    41220001 47F066CA D203F000 66F95820    58A041FF 000407FF 90ECD00C 05C041F0  *.....0..K.0..9..................0*
042860    C1B650FD 000850DF 000418DF D703D008    D00858F0 C0EAD201 F000C022 47F0C024  *A...........P......0..K.0....0..*
042880    07FE4120 C0744830 C0764140 C06A4154    0002D501 40005000 4740C050 D201C078  *........... ......N. .... ..K...*
0428A0    4000D201 40005000 D2015000 C0781952    47B0C05E 41550002 47F0C034 41440002  * .K. ...K................0......*
0428C0    4630C030 47F0C07A 00030009 002D003A    00430062 00050062 00009400 C0D49867  *.....0........................M..*
0428E0    C0DA1366 9845C0E2 4130CCC8 D5013000    300247D0 C0AED701 30003002 D7013002  *.......S...HN.........P.....P...*
042900    3000D7C1 30003C02 9601C0D4 8734C08E    9101C0D4 4780C0C2 9401C0D4 8656C08A  *..P........M.......M...B...M....*
042920    000247F0 C0EE0213 0011000C 000003CD    0C790040 91088056 00000002 00042929  *...0............... .............*
042940    00000002 0004292F 00042D1E 9828C13E    41880002 D5014000 50004720 C10ED201  *...............A.....N. .....A.K.*
042960    80004000 8742C0F2 47F0C12A D2018000    50008756 C0F24188 0002D201 80004000  *.. ....2.0A.K........2....K... .*
042980    8742C118 47F0C1AA 41880002 D2018000    50008756 C12A47F0 C1AA000C 00000002  *..A..0A.....K........A..0A.......*
0429A0    000429C8 00042988 000429CA 00000002    000429DE 000429DE 00000001 00050007  *...H............................*
0429C0    0008000A 0014C018 00190001 00020003    00040006 00080009 000F0011 00120015  *................................*
0429E0    00000000 00000000 00000000 00000000    00000000 00000000 00000000 00000000  *................................*
042A00    00000000 00000000 00058DD 000498EC     D00C07FE 18D59104 0004EF68 00000000  *.......................N..........*
042A20    951A4780 9358914C 80054710 935847F0    93DE9500 70A24770 93589110 70A04780  *....... .......0................*
042A40    9358D701 70087008 5840951A 58A094D2    47FC9476 C0064920 000635E0 0005E5A8  *..P...... .....K.0............V.*
042A60    90ECD00C 05C004F0 07004110 C0100511    0F042B04 7FFF0A0E 58B00010 9110B074  *.......0........................*

043020    4A009BDE 40050000 47F095C6 48609BEE    8A600001 4770969E 48609C26 41660001  *.... ....0.F....................*
```

```
LOC  OBJECT CODE    ADDR1 ADDR2  STMT   SOURCE STATEMENT                                    F08APR70   9/16/70

                                 128 *.................................................................. 00010300
                                 129 *                                                                   00010400
                                 130 *        ANSWERS FOR THE SELECTION SORT.                            00010500
                                 131 *                                                                   00010600
                                 132 *        1. THE DATA WOULD BE SORTED IN DESCENDING RATHER THAN      00010700
                                 133 *           ASCENDING SEQUENCE.                                     00010800
                                 134 *                                                                   00010900
                                 135 *        2. THERE WILL BE THREE EXCHANGES DURING THE FIRST SCAN;    00011000
                                 136 *           ITEMS 67 & 58, 58 & 45, AND 45 & 3.                     00011100
                                 137 *                                                                   00011200
                                 138 *        3. THE 58 WILL BE IN THE 5TH POSITION AFTER SCAN 2, AND THE 00011300
                                 139 *           LIST WILL LOOK LIKE: 3,09,98,67,58,45.                  00011400
                                 140 *                                                                   00011500
                                 141 *.................................................................. 00011600
```

```
LOC  OBJECT CODE    ADDR1 ADDR2  STMT   SOURCE STATEMENT                                    F08APR70   9/16/70

                                 143 ***********************************************************************  00011800
                                 144 *                                                                        00011900
                                 145 *        THE EXAMPLE OF THE SELECTION SORT WHICH YOU HAVE JUST SEEN      00012000
                                 146 *        WILL EXECUTE THE SAME NUMBER OF SCANS REGARDLESS OF WHETHER     00012100
                                 147 *        OR NOT THE DATA IS ALREADY IN THE DESIRED ORDER. THERE ARE      00012200
                                 148 *        MANY TYPES OF SORT THAT CAN TAKE ADVANTAGE OF THE NATURAL       00012300
                                 149 *        ORDER OF THE DATA TO BE SORTED. THE REMAINING EXAMPLE           00012400
                                 150 *        TO BE STUDIED IS OF THIS VARIETY. THIS PARTICULAR METHOD IS     00012500
                                 151 *        THE ONE CALLED "EXCHANGING", WHICH COMPARES THE FIRST ITEM      00012600
                                 152 *        TO THE SECOND, EXCHANGES THEM IF REQUIRED, THEN COMPARES        00012700
                                 153 *        THE SECOND ITEM TO THE THIRD, THIRD TO THE FOURTH, AND SO ON.   00012800
                                 154 *        THE SORT IS COMPLETE WHEN NO EXCHANGES OCCUR ON A SCAN, OR      00012900
                                 155 *        WHEN N-1 SCANS HAVE BEEN MADE.                                  00013000
                                 156 *                                                                        00013100
                                 157 *        LEGEND: TWO VERTICALLY ADJACENT ITEMS WITH <'S NEXT TO THEM     00013200
                                 158 *                ARE BEING COMPARED. THE UNDERSCORE '_' INDICATES        00013300
                                 159 *                THE LOGICAL END OF THE LIST.                            00013400
                                 160 *                                                                        00013500
                                 161 *        COMPARE  #0   #1   #2   #3   #4   #5                            00013600
                                 162 *                                                                        00013700
                                 163 *        *         5<   5    5    5    5    5                            00013800
                                 164 *        D         6<   6<   4    4    4    4                            00013900
                                 165 *        A         4    4<   6<   1    1    1   END OF SCAN #1.          00014000
                                 166 *        T         1    1    1<   6<   2    2                            00014100
                                 167 *        A         2    2    2    2<   6<   3                            00014200
                                 168 *        *        _3   _3   _3   _3   _3<  _6                            00014300
                                 169 *                                                                        00014400
                                 170 *        AS YOU CAN SEE, THE EXCHANGE TECHNIQUE CAUSES THE LARGEST       00014500
                                 171 *        ITEM IN THE LIST TO BE PUSHED TO THE BOTTOM OF THE LIST AT      00014600
                                 172 *        EACH SCAN, SO THERE IS NO NEED TO COMPARE IT ON THE NEXT        00014700
                                 173 *        SCAN.                                                           00014800
                                 174 *                                                                        00014900
                                 175 *        *         5<   4    4    4    4                                 00015000
                                 176 *        D         4<   5<   1    1    1    END OF SCAN #2.              00015100
                                 177 *        A         1    1<   5<   2    2                                 00015200
                                 178 *        T         2    2    2<   5<   3                                 00015300
                                 179 *        A        _3   _3   _3   -3<  _5                                 00015400
                                 180 *        *         6    6    6    6    6                                 00015500
                                 181 *                                                                        00015600
                                 182 *        *         4<   1    1    1                                      00015700
                                 183 *        D         1<   4<   2    2    END OF SCAN #3.                   00015800
                                 184 *        A         2    2<   4<   3     ( ESSENTIALLY, THIS IS THE END   00015900
                                 185 *        T        _3   _3   _3<  _4       OF THE SORT, SINCE THE LIST     00016000
                                 186 *        A         5    5    5    5       IS IN ORDER, HOWEVER, ONE       00016100
                                 187 *        *         6    6    6    6       MORE SCAN IS TAKEN, AND WHEN    00016200
                                 188 *                                        NO SWAPS ARE MADE, WE QUIT.)    00016300
                                 189 ***********************************************************************  00016400
```

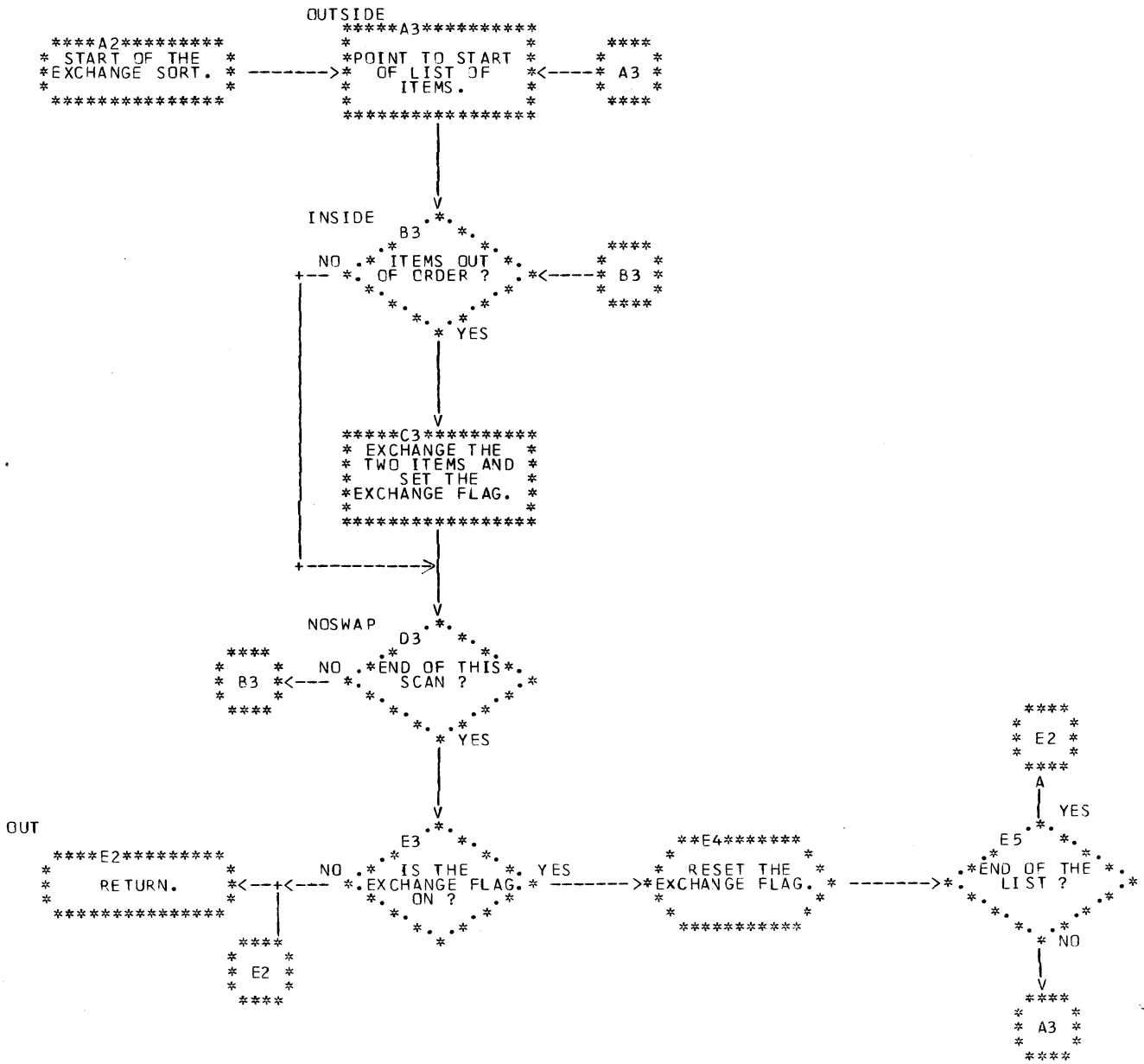
OUTSIDE
A2
START OF THE EXCHANGE SORT.
A3
POINT TO START OF LIST OF ITEMS.
A3
INSIDE
B3
ITEMS OUT OF ORDER ?
NO
YES
B3
C3
EXCHANGE THE TWO ITEMS AND SET THE EXCHANGE FLAG.
NOSWAP
D3
END OF THIS SCAN ?
NO
YES
B3
OUT
E3
IS THE EXCHANGE FLAG ON ?
NO
YES
E2
E2
RETURN.
E4
RESET THE EXCHANGE FLAG.
E5
END OF THE LIST ?
YES
NO
E2
A3

```
 LOC  OBJECT CODE    ADDR1 ADDR2  STMT   SOURCE STATEMENT                                          F08APR70   9/16/70

000082 9400 C0D4      000DA        204          NI    FLAG,0              SET THE EXCHANGE INDICATOR OFF.      00017900
000086 9867 C0DA            000E0  205          LM    R6,R7,=A(L'EXINPUT,EXINPUT+L'EXINPUT+1)                  00018000
00008A 1366                        206          LCR   R6,R6               NEGATIVE FOR BACKING THRU LIST.      00018100
00008C 9845 C0E2            000E8  207          LM    R4,R5,=A(L'EXINPUT,EXINPEND-L'EXINPUT-1)                 00018200
000090 4130 C0C8            000CE  208 OUTSIDE  LA    R3,EXINPUT          START OF LIST                        00018300
                                   209 *                                                                       00018400
000094                             210 INSIDE   EQU   *                   THIS LOOP DOES THE EXCHANGING.       00018500
000094 D501 3000 3002 00000 00002  211          CLC   0(L'EXINPUT,R3),L'EXINPUT(R3)                          00018600
00009A 47D0 C0AE            C0B4   212          BNH   NOSWAP              IF IN ASCENDING SEQUENCE, NO CHANGE. 00018700
00009E D701 3000 3002 00000 00002  213          XC    0(L'EXINPUT,R3),L'EXINPUT(R3)     OTHERWISE,           00018800
0000A4 D701 3002 3000 00002 00000  214          XC    L'EXINPUT(L'EXINPUT,R3),0(R3)     EXCHANGE             00018900
0000AA D701 3000 3002 00000 00002  215          XC    0(L'EXINPUT,R3),L'EXINPUT(R3)     THE ENTRIES.         00019000
0000B0 9601 C0D4      000DA        216          OI    FLAG,1              INDICATE THAT AN EXCHANGE TOOK PLACE 00019100
0000B4 8734 C08E            00094  217 NOSWAP  BXLE  R3,R4,INSIDE         CONTINUE TO END OF SCAN.             00019200
0000B8 9101 C0D4      000DA        218          TM    FLAG,1              DID AN EXCHANGE TAKE PLACE IN THIS   00019300
0000BC 4780 C0C2            000C8  219          BZ    OUT                 SCAN ? NO, LIST IS IN ORDER, QUIT.   00019400
0000C0 9401 C0D4      000DA        220          NI    FLAG,1               YES, RESET THE INDICATOR, AND SCAN. 00019500
0000C4 8656 C08A            00090  221          BXH   R5,R6,OUTSIDE       CONTINUE TO THE LAST SCAN.           00019600


                                   223 *                                                                       00019800
                                   224 *        TAKE A DUMP TO SEE IF THE SORT WORKED.                         00019900
                                   225 *                                                                       00020000
0000C8 0002                        226 OUT      DC    H'2'                                                     00020100
0000CA 47F0 C0EE            000F4  227          B     PASTEXCH            BRANCH AROUND TABLE.                 00020200


                                   229 *        DATA LIST USED AS INPUT FOR THE EXCHANGING SORT ROUTINE.       00020400
0000CE 0213001100C0000             230 EXINPUT  DC    H'531,17,12,0,973,121'                                   00020500
0000DA                             231 EXINPEND EQU   *                                                        00020600
0000DA 00                          232 FLAG     DC    X'0'                EXCHANGE INDICATOR.                  00020700


                                   234 ************************************************************************* 00020900
                                   235 *                                                                       00021000
                                   236 *        ANSWER THESE QUESTIONS ABOUT THE "EXCHANGING" SORT ROUTINE.    00021100
                                   237 *                                                                       00021200
                                   238 *        1. WHICH INSTRUCTIONS ACTUALLY EXCHANGE OUT OF SEQUENCE        00021300
                                   239 *           ITEMS ?                                                     00021400
                                   240 *                                                                       00021500
                                   241 *        2. WHICH VALUE WILL BE AT THE LOW ADDRESS END OF THE LIST      00021600
                                   242 *           AFTER 3 SCANS ?                                             00021700
                                   243 *                                                                       00021800
                                   244 *        3. HOW MANY DATA MOVES WILL BE MADE DURING THE FIRST SCAN ?    00021900
                                   245 *                                                                       00022000
                                   246 *        4. WHICH INSTRUCTION(S) LOWER THE ADDRESS OF THE HIGH END      00022100
                                   247 *           OF THE LIST ?                                               00022200
                                   248 *                                                                       00022300
                                   249 ******** WHEN YOU GET HERE, SHOW THE RED SIDE OF THE "ANSWER CUE".      00022400
                                   250 *                                                                       00022500
                                   251 ************************************************************************* 00022600
```

```
F.P. REGS.  0C.01CD20 0001D5C8   40.04D132 C0000050   FD.000000 00000000   00.12C002 00C00000

REGS 0-7     FFFFFF2E 0004EFF8 000428D2 0004292C    00000002 00042929 FFFFFFFE 00042929
REGS 8-15    0001D5C8 00000000 0001D5F0 00000000    6F04285E 00042A14 0000C7D4 00042D1E

000000    00000000 00000000 00000000 00000000    00042858 00000000 FF040080 A000A93C  *................................*
000020    FFA50003 6F007588 FFA50001 5F042922    0000FF00 00000000 FF060233 80000000  *................................*
000040    00001360 08000000 00001358 00005920    02C01DA4 0000996C 00040000 00007498  *................................*
000060    00040000 00007BC8 00040000 00007588    00000000 00012D1C C0040000 0000751A  *.......H........................*

042840    41220001 47F066CA D203F000 66F95820    58AC41FF 000407FF 90ECD00C 05C041F0  *.....C..K.0..9.................C*
042860    C1B650FD 000850DF 000418DF D703D008    D00858F0 C0EAD201 F000C022 47F0C024  *A...........P......0..K.0....0..*
042880    07FE4120 C0744830 C0764140 C06A4154    0002D501 40005000 4740C050 D201C078  *........... ......N. .... ..K...*
0428A0    4000D201 40005000 D2015000 C0781952    47B0C05E 41550002 47F0C034 41440002  * .K. ...K................0......*
0428C0    4630C030 47F0C07A 00030009 002D003A    00430062 00050062 00009400 C0D49867  *.....0........................M..*
0428E0    C0DA1366 9845C0E2 4130C0C8 D5013000    300247D0 C0AED701 30003002 D7013002  *.......S...HN.........P.....P...*
042900    3000D701 300030C2 9601C0D4 8734C08E    9101C0D4 4780C0C2 9401C0D4 8656C08A  *..P........M.......M...B...M....*
042920    000247F0 C0EE0000 000C0011 00790213    03CD0140 91088056 00000002 00042929  *...0............... .............*
042940    00000002 0004292F 00042D1E 9828C13E    41880002 D5014000 50004720 C10ED201  *...............A.....N. .....A.K.*
042960    80004000 8742C0F2 47F0C12A D2018000    50008756 C0F24188 0002D201 80004000  *.. ....2.0A.K........2....K... .*
042980    8742C118 47F0C1AA 41880002 D2018000    50008756 C12A47F0 C1AA0000 00000002  *..A..0A.....K.......A..0A.......*
0429A0    000429C8 000429B8 000429CA 00000002    000429DE 000429DE 00000001 00050007  *...H............................*
0429C0    0008000A 00140018 00190001 00020003    00040006 00080009 000F0011 00120015  *................................*
0429E0    00000000 00000000 00000000 00000000    00000000 00000000 00000000 00000000  *................................*
042A00    00000000 00000000 000558D0 000498EC    D00C07FE 18D59104 0004EF68 00000000  *......................N..........*
042A20    951A4780 93589140 80054710 935847F0    93DE9500 70A24770 93589110 70A04780  *....... .......0................*
042A40    9358D701 70087008 5840951A 58A094D2    47F09476 00064920 000635E0 C005E5A8  *..P...... .....K.0............V.*
042A60    9CECD0C0 05C004F0 07004110 C0100511    0F042B04 7FFF0A0E 58B00010 911CB074  *.......0........................*

043020    4A009BDE 40050000 47F095C6 48609BEE    8A600001 4770969E 48609C26 41660001  *.... ....0.F....................*
```

```
 LOC  OBJECT CODE    ADDR1 ADDR2  STMT   SOURCE STATEMENT                                          F08APR70   9/16/70

                                  254 *.......................................................... 00022900
                                  255 *                                                            00023000
                                  256 *        ANSWERS FOR THE EXCHANGING SORT SAMPLE.             00023100
                                  257 *                                                            00023200
                                  258 *        1. THE THREE 'XC' INSTRUCTIONS DO THE EXCHANGING.   00023300
                                  259 *                                                            00023400
                                  260 *        2. THE ZERO (0) WILL BE AT THE START OF THE LIST AFTER SCAN 3. 00023500
                                  261 *                                                            00023600
                                  262 *        3. THERE WILL BE 4 MOVES, PAIRS: 531 & 17, 531 & 12, 531 & 0, 00023700
                                  263 *           AND 973 & 121.                                   00023800
                                  264 *                                                            00023900
                                  265 *        4. THE 'BXH   R5,R6,OUTSIDE ' LOWERS THE ADDRESS OF THE HIGH 00024000
                                  266 *           END OF THE LIST.                                 00024100
                                  267 *                                                            00024200
                                  268 *.......................................................... 00024300
0000E0                            269          LTORG                                               00024400
0000E0 00000002000000D1           270                =A(L'EXINPUT,EXINPUT+L'EXINPUT+1)
0000E8 00000002000000D7           271                =A(L'EXINPUT,EXINPEND-L'EXINPUT-1)
0000F0 00000000                   272                =V(PCHKRETN)
0000F4                            273 PASTEXCH DS    0H                                            00024500
```

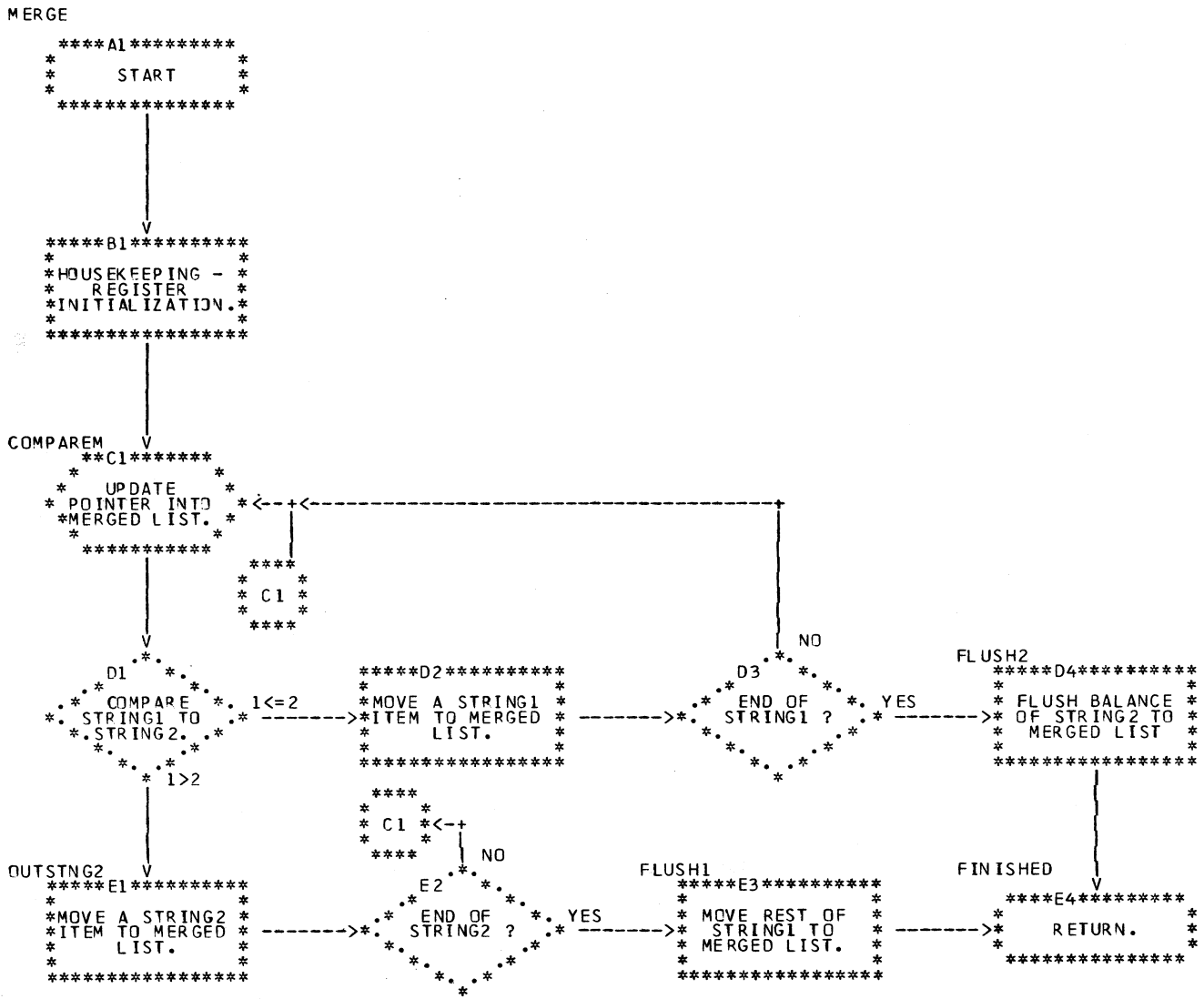
MERGE
A1
START
B1
HOUSEKEEPING - REGISTER INITIALIZATION.
COMPAREM
C1
UPDATE POINTER INTO MERGED LIST.
C1
D1
COMPARE STRING1 TO STRING2.
1<=2
1>2
D2
MOVE A STRING1 ITEM TO MERGED LIST.
C1
NO
E2
END OF STRING2 ?
YES
OUTSTNG2
E1
MOVE A STRING2 ITEM TO MERGED LIST.
D3
END OF STRING1 ?
NO
YES
FLUSH1
E3
MOVE REST OF STRING1 TO MERGED LIST.
FLUSH2
D4
FLUSH BALANCE OF STRING2 TO MERGED LIST
FINISHED
E4
RETURN.

```
LOC   OBJECT CODE    ADDR1 ADDR2  STMT   SOURCE STATEMENT                                          F08APR70   9/16/70

                                  291 ***********************************************************************  00026300
                                  292 *                                                                        00026400
                                  293 *        AFTER TWO OR MORE GROUPS OF DATA ITEMS HAVE BEEN SORTED, THE    00026500
                                  294 *        NEED FREQUENTLY ARISES TO MERGE THOSE GROUPS INTO A SINGLE      00026600
                                  295 *        GROUP OF SEQUENCED ITEMS. IN GENERAL, MERGING IS A TECHNIQUE    00026700
                                  296 *        THAT COLLATES SEVERAL SEQUENCES OF DATA ITEMS TO FORM A         00026800
                                  297 *        SINGLE SEQUENCE. MERGING, THEN, IS A RELATIVELY SIMPLE          00026900
                                  298 *        PROCESS, AS CAN BE SEEN IN THE FOLLOWING EXAMPLE.               00027000
                                  299 *                                                                        00027100
                                  300 ***********************************************************************  00027200


                                  302 ***********************************************************************  00027400
                                  303 *                                                                        00027500
                                  304 *        THIS ROUTINE WILL MERGE TWO STRINGS (SEQUENCES) OF DATA         00027600
                                  305 *        NAMED 'STRING1' AND 'STRING2' INTO THE AREA CALLED 'MERGED'.    00027700
                                  306 *                                                                        00027800
                                  307 ***********************************************************************  00027900
000000F4 9828 C13E            00144 308 MERGE    LM    R2,R8,CONSTNTS       INITIALIZE THE LOOP CONTROL REGS.  00028000
000000F8 4188 0002            00002 309 COMPAREM LA    R8,L'MERGED(R8)      BUMP POINTER INTO MERGED LIST.     00028100
000000FC D501 4000 5000 00000 00000 310           CLC   0(L'STRING1,R4),0(R5) COMPARE STRING 1 TO STRING 2.   00028200
000100 4720 C10E              00114 311           BH    OUTSTNG2             STRING2 LOW, OUTPUT ONE ITEM.      00028300
000106 D201 8000 4000 00000 00000 312           MVC   0(L'MERGED,R8),0(R4) OUTPUT ONE STRING 1 ITEM.          00028400
00010C 8742 C0F2              000F8 313           BXLE  R4,R2,COMPAREM       CONTINUE TO END OF STRING 1.       00028500
000110 47F0 C12A              00130 314           B     FLUSH2                THEN FLUSH STRING 2.               00028600
000114 D201 8000 5000 00000 00000 315 OUTSTNG2 MVC   0(L'MERGED,R8),0(R5) OUTPUT ONE STRING 2 ITEM.          00028700
00011A 8756 C0F2              000F8 316           BXLE  R5,R6,COMPAREM       CONTINUE TO END OF STRING 2.       00028800
00011E 4188 0002              00002 317 FLUSH1   LA    R8,L'MERGED(R8)                                        00028900
000122 D201 8000 4000 00000 00000 318           MVC   0(L'MERGED,R8),0(R4) THEN FLUSH THE REMAINDER OF STRING1 00029000
000128 8742 C118              0011E 319           BXLE  R4,R2,FLUSH1           TO THE MERGED LIST.              00029100
00012C 47F0 C1AA              001B0 320           B     FINISHED             END OF STRING 1, QUIT.             00029200
000130 4188 0002              00002 321 FLUSH2   LA    R8,L'MERGED(R8)                                        00029300
000134 D201 8000 5000 00000 00000 322           MVC   0(L'MERGED,R8),0(R5) FLUSH CONTENTS OF STRING 2 INTO THE 00029400
00013A 8756 C12A              00130 323           BXLE  R5,R6,FLUSH2           MERGED LIST.                     00029500
00013E 47F0 C1AA              001B0 324           B     FINISHED             END OF STRING 2, QUIT.             00029600


000142 0000
000144 0000000200000170               326 CONSTNTS DC    A(L'STRING1,STRING1N-L'STRING1,STRING1)                00029800
000150 0000017200000002               327          DC    A(STRING2,L'STRING2,STRING2N-L'STRING2)                00029900
00015C 00000186                       328          DC    A(MERGED-L'MERGED)                                     00030000
000160 0000000100050007               329 STRING1  DC    H'0,1,5,7,8,10,20,24,25'                               00030100
000172                                330 STRING1N EQU   *                                                      00030200
000172 0001000200030004               331 STRING2  DC    H'1,2,3,4,6,8,9,15,17,18,21'                           00030300
000188                                332 STRING2N EQU   *                                                      00030400
000188 0000000000000000               333 MERGED   DC    20H'0'                                                 00030500
```

```
LOC  OBJECT CODE    ADDR1 ADDR2  STMT   SOURCE STATEMENT                                    F08APR70   9/16/70

                                 335 ***********************************************************************  00030700
                                 336 *                                                                      00030800
                                 337 *        ANSWER THESE QUESTIONS CONCERNING THE MERGING ROUTINE WHICH   00030900
                                 338 *        APPEARS ON THE PRECEEDING PAGE.                               00031000
                                 339 *                                                                      00031100
                                 340 *        1. IF EQUAL ITEMS ARE ENCOUNTERED IN 'STRING1' AND 'STRING2', 00031200
                                 341 *           WHICH WILL BE PLACED IN 'MERGED' FIRST ?                   00031300
                                 342 *                                                                      00031400
                                 343 *        2. USING THE VALUES GIVEN IN STRING1 AND STRING2, WILL THE    00031500
                                 344 *           INSTRUCTION LABELED 'FLUSH2' EVER BE EXECUTED ?            00031600
                                 345 *                                                                      00031700
                                 346 *        3. USING THE SAME VALUES, WHICH ITEM WILL BE THE 12TH IN THE  00031800
                                 347 *           MERGED LIST, AFTER THE MERGE IS COMPLETE ?                 00031900
                                 348 *                                                                      00032000
                                 349 ******** WHEN YOU REACH THIS POINT, DISPLAY THE BLUE SIDE OF YOUR     00032100
                                 350 *        'ANSWER CUE'.                                                 00032200
                                 351 *                                                                      00032300
                                 352 ***********************************************************************  00032400
```

```
F.P. REGS.  00.01CD20 0001D5C8   40.04D132 00C00050   FD.C00000 00000000   00.12C002 0CC00000

REGS 0-7     FFFFFF2E 0004EFF8 C0000002 C00429C8    000429CA 000429E0 00000002 C00429DE
REGS 8-15    00042A06 00000000 0001D5F0 00000000    6F04285E 00042A14 000CC7D4 00042D1E

000000    00000000 00C00000 00000000 00000000    00042858 00000000 FF040C80 A000A93C  *................................*
000020    FFA50003 6F007588 FFA50001 6F042A0A    0000FF00 00000000 FF050135 8006D358  *...............................L.*
000040    000676F8 0C000001 00001468 00005920    02C013A4 0000996C C0040000 00007498  *...8............................*
000060    00040000 00007BC8 00040000 00007588    00000000 00012D10 00040000 0000751A  *.......H........................*

042840    41220001 47F066CA D203F000 66F95820    58A041FF 000407FF 90ECD00C 05C041F0  *.....0..K.0..9.................0*
042860    C1B65CFD 000850DF 000418DF D703D008    D00858F0 C0EAD201 F000C022 47F0C024  *A...........P......0..K.0....0..*
042880    07FE4120 C0744830 C0764140 C06A4154    0002D501 40005000 4740C050 D201C078  *........... ......N. .... ..K...*
0428A0    4000D201 40005000 D2015000 C0781952    47B0C05E 41550002 47F0C034 41440002  * .K. ...K................0......*
0428C0    4630C030 47F0C07A 00030009 002D003A    00430062 00050062 00009400 C0D49867  *.....0........................M..*
0428E0    C0DA1366 9845C0E2 4130C0C8 D5013000    300247D0 C0AED701 30003002 D7013002  *.......S...HN.........P.....P...*
042900    3000D701 3000C3002 9601C0D4 8734C08E    9101C0D4 4780C0C2 9401C0D4 8656C08A  *..P........M.......M...B...M....*
042920    000247F0 C0EE0000 000C0011 00790213    C3CD0140 91088056 000C0002 00042929  *...0............... ............*
042940    00000002 0004292F 00042D1E 9828C13E    41880002 D5014000 50004720 C10ED201  *...............A.....N. .....A.K.*
042960    80004000 8742C0F2 47F0C12A D2018000    50008756 C0F24188 0002D201 80004000  *.. ....2.0A.K........2....K... .*
042980    8742C118 47F0C1AA 41880002 D2018000    50008756 C12A47F0 C1AA0000 00000002  *..A..0A.....K........A..0A.......*
0429A0    000429C8 000429B8 000429CA 00000002    000429DE 000429DE 00000001 00050007  *...H............................*
0429C0    0008000A 00140018 00190001 00020003    00040006 00C80009 000F0011 00120015  *................................*
0429E0    00000001 00010002 00030004 00050006    00070008 00080009 000A000F 00110012  *................................*
042A00    00140015 00180019 000558DD 000498EC    D00C07FE 18D59104 0004EF68 00000000  *......................N..........*
042A20    951A4780 9358914C 80054710 935847F0    93DE9500 70A24770 93589110 70A04780  *....... .......0................*
042A40    9358D701 70087008 5840951A 58A094D2    47F09476 00064920 000635E0 0005E5A8  *..P...... .....K.0............V.*
042A60    90ECD00C 05C004F0 07004110 C0100511    0F042B04 7FFF0A0E 58B00010 9110B074  *.......0........................*

043020    4A009BDE 40050000 47F095C6 48609BEE    8A600001 4770969E 48609C26 41660001  *.... ....0.F...................*
```



**********

```
LOC  OBJECT CODE    ADDR1 ADDR2  STMT   SOURCE STATEMENT                                          F08APR70   9/16/70

                                 354 *.......................................................... 00032600
                                 355 *                                                            00032700
                                 356 *        ANSWERS TO THE QUESTIONS ON MERGING.                00032800
                                 357 *                                                            00032900
                                 358 *        1. THE ONE FROM 'STRING1' WILL GO FIRST, BECAUSE OF THE 00033000
                                 359 *           ' BH    OUTSTNG2 ' INSTRUCTION.                  00033100
                                 360 *                                                            00033200
                                 361 *        2. NO, BECAUSE STRING2 WILL DRAIN (RUN OUT) BEFORE STRING1. 00033300
                                 362 *                                                            00033400
                                 363 *        3. THE 9. YOU MAY CHECK THIS BY USING THE DUMP.     00033500
                                 364 *                                                            00033600
                                 365 *.......................................................... 00033700


0001B0 0005                      367 FINISHED DC     H'5'                                         00033900
0001B2 58DD 0004          00004  368          L      R13,4(R13)                                   00034000
0001B6 98EC D00C          0000C  369          LM     R14,R12,12(R13)                              00034100
0001BA 07FE                      370          BR     R14                                          00034200
0001BC                           371 SAVEAREA DS     18F                                          00034300
                                 372          END                                                 00034400
```

9/16/70

| POS.ID | REL.ID | FLAGS | ADDRESS |
|---|---|---|---|
| 01 | 01 | 0C | 0000E4 |
| 01 | 01 | 0C | 0000EC |
| 01 | 01 | 0C | 000148 |
| 01 | 01 | 0C | 00014C |
| 01 | 01 | 0C | 000150 |
| 01 | 01 | 0C | 000158 |
| 01 | 01 | 0C | 00015C |
| 01 | 02 | 1C | 0000F0 |

9/16/70

| SYMBOL | LEN | VALUE | DEFN | REFERENCES | | | | | | | | | | | | | | |
|---|---|---|---|---|---|---|---|---|---|---|---|---|---|---|---|---|---|---|
| #OFSCANS | 00002 | 00007C | 00106 | 0088 | | | | | | | | | | | | | | |
| BR14 | 00002 | 000028 | 00032 | 0030 | 0031 | | | | | | | | | | | | | |
| COMPAREM | 00004 | 0000F8 | 00309 | 0313 | 0316 | | | | | | | | | | | | | |
| CONSTNTS | 00004 | 000144 | 00326 | 0308 | | | | | | | | | | | | | | |
| EXINPEND | 00001 | 0000DA | 00231 | 0207 | 0271 | | | | | | | | | | | | | |
| EXINPUT | 00002 | 0000CE | 00230 | 0205 | 0205 | 0205 | 0207 | 0207 | 0208 | 0211 | 0211 | 0213 | 0213 | 0214 | 0214 | 0215 | 0215 | 0270 |
| | | | | 0270 | 0270 | 0271 | 0271 | | | | | | | | | | | |
| FINDLOW | 00002 | 000080 | 00108 | 0102 | | | | | | | | | | | | | | |
| FINISHED | 00002 | 0001B0 | 00367 | 0320 | 0324 | | | | | | | | | | | | | |
| FLAG | 00001 | 0000DA | 00232 | 0204 | 0216 | 0218 | 0220 | | | | | | | | | | | |
| FLUSH1 | 00004 | 00011E | 00317 | 0319 | | | | | | | | | | | | | | |
| FLUSH2 | 00004 | 000130 | 00321 | 0314 | 0323 | | | | | | | | | | | | | |
| INSELECT | 00006 | 00003A | 00091 | 0099 | | | | | | | | | | | | | | |
| INSIDE | 00001 | 000094 | 00210 | 0217 | | | | | | | | | | | | | | |
| MERGE | 00004 | 0000F4 | 00308 | | | | | | | | | | | | | | | |
| MERGED | 00002 | 000188 | 00333 | 0309 | 0312 | 0315 | 0317 | 0318 | 0321 | 0322 | 0328 | 0328 | | | | | | |
| NOCHANGE | 00002 | 000056 | 00096 | 0092 | | | | | | | | | | | | | | |
| NOSWAP | 00004 | 0000B4 | 00217 | 0212 | | | | | | | | | | | | | | |
| OUT | 00002 | 0000C8 | 00226 | 0219 | | | | | | | | | | | | | | |
| OUTSIDE | 00004 | 000090 | 00208 | 0221 | | | | | | | | | | | | | | |
| OUTSLECT | 00004 | 000036 | 00090 | 0101 | | | | | | | | | | | | | | |
| OUTSTNG2 | 00006 | 000114 | 00315 | 0311 | | | | | | | | | | | | | | |
| PASTEXCH | 00002 | 0000F4 | 00273 | 0227 | | | | | | | | | | | | | | |
| R0 | 00001 | 000000 | 00003 | | | | | | | | | | | | | | | |
| R1 | 00001 | 000001 | 00004 | | | | | | | | | | | | | | | |
| R10 | 00001 | 00000A | 00013 | | | | | | | | | | | | | | | |
| R11 | 00001 | 00000B | 00014 | | | | | | | | | | | | | | | |
| R12 | 00001 | 00000C | 00015 | 0019 | 0020 | 0021 | 0369 | | | | | | | | | | | |
| R13 | 00001 | 00000D | 00016 | 0019 | 0023 | 0024 | 0025 | 0026 | 0026 | 0368 | 0368 | 0369 | | | | | | |
| R14 | 00001 | 00000E | 00017 | 0019 | 0032 | 0369 | 0370 | | | | | | | | | | | |
| R15 | 00001 | 00000F | 00018 | 0022 | 0023 | 0024 | 0025 | 0029 | 0030 | | | | | | | | | |
| R2 | 00001 | 000002 | 00005 | 0087 | 0096 | 0308 | 0313 | 0319 | | | | | | | | | | |
| R3 | 00001 | 000003 | 00006 | 0088 | 0101 | 0208 | 0211 | 0211 | 0213 | 0213 | 0214 | 0214 | 0215 | 0215 | 0217 | | | |
| R4 | 00001 | 000004 | 00007 | 0089 | 0090 | 0091 | 0093 | 0094 | 0100 | 0100 | 0207 | 0217 | 0310 | 0312 | 0313 | 0318 | 0319 | |
| R5 | 00001 | 000005 | 00008 | 0090 | 0091 | 0094 | 0095 | 0096 | 0098 | 0098 | 0207 | 0221 | 0310 | 0315 | 0316 | 0322 | 0323 | |
| R6 | 00001 | 000006 | 00009 | 0205 | 0206 | 0206 | 0221 | 0316 | 0323 | | | | | | | | | |
| R7 | 00001 | 000007 | 00010 | 0205 | | | | | | | | | | | | | | |
| R8 | 00001 | 000008 | 00011 | 0308 | 0309 | 0309 | 0312 | 0315 | 0317 | 0317 | 0318 | 0321 | 0321 | 0322 | | | | |
| R9 | 00001 | 000009 | 00012 | | | | | | | | | | | | | | | |
| SAVEAREA | 00004 | 0001BC | 00371 | 0022 | | | | | | | | | | | | | | |
| SELECT | 00002 | 000070 | 00104 | 0087 | 0089 | 0090 | 0091 | 0094 | 0095 | 0098 | 0100 | 0106 | 0106 | | | | | |
| SELECTMP | 00002 | 00007E | 00107 | 0093 | 0095 | | | | | | | | | | | | | |
| SELECTND | 00001 | 00007C | 00105 | 0087 | 0106 | | | | | | | | | | | | | |
| SELECTST | 00004 | 000064 | 00100 | 0097 | | | | | | | | | | | | | | |
| SORTTECH | 00001 | 000000 | 00001 | | | | | | | | | | | | | | | |
| STRING1 | 00002 | 000160 | 00329 | 0310 | 0326 | 0326 | 0326 | | | | | | | | | | | |
| STRING1N | 00001 | 000172 | 00330 | 0326 | | | | | | | | | | | | | | |
| STRING2 | 00002 | 000172 | 00331 | 0327 | 0327 | 0327 | | | | | | | | | | | | |
| STRING2N | 00001 | 000188 | 00332 | 0327 | | | | | | | | | | | | | | |

```
STMT  ERROR CODE   MESSAGE                                                                    9/16/70

NO STATEMENTS FLAGGED IN THIS ASSEMBLY
*STATISTICS*     SOURCE RECORDS (SYSIN) =   344      SOURCE RECORDS (SYSLIB) =    25
*OPTIONS IN EFFECT*   LIST, NODECK, LOAD, NORENT, XREF, NOTEST, ALGN, OS, LINECNT =  55
  446 PRINTED LINES
```

```
 F44-LEVEL LINKAGE EDITOR OPTIONS SPECIFIED MAP,LET,LIST,NCAL
           VARIABLE OPTIONS USED -  SIZE=(45056,6144)-          DEFAULT OPTION(S) USED
IEW0000              ENTRY UTILITY

                                                MODULE MAP

  CONTROL SECTION                        ENTRY

    NAME     ORIGIN  LENGTH                 NAME   LOCATION     NAME   LOCATION     NAME   LOCATION     NAME   LOCATION

  SORTTECH       00     204
  UTILITY       208     5A0
                                          PRINT        26A    PCHKRETN     4C6

 ENTRY ADDRESS       208
 TOTAL LENGTH        7A8

****GO        DOES NOT EXIST BUT HAS BEEN ADDED TO DATA SET
```

```
 SSSSSSSSSS   OOOOOOOOOOOO  RRRRRRRRRRR   TTTTTTTTTTTT
SSSSSSSSSSS   OOOOOOOOOOOO  RRRRRRRRRRRR  TTTTTTTTTTTT
SS        SS  OO        OO  RR        RR       TT
SS            OO        OO  RR        RR       TT
SSS           OO        OO  RR        RR       TT
 SSSSSSSSS    OO        OO  RRRRRRRRRRRR       TT
  SSSSSSSS    OO        OO  RRRRRRRRRRR        TT
        SSS   OO        OO  RR    RR           TT
         SS   OO        OO  RR     RR          TT
SS       SS   OO        OO  RR      RR         TT
SSSSSSSSSSS   OOOOOOOOOOOO  RR       RR        TT
 SSSSSSSSSS   OOOOOOOOOOOO  RR        RR       TT
```

```
TTTTTTTTTTTT   AAAAAAAAAA        11
TTTTTTTTTTTT  AAAAAAAAAAAA      111
     TT       AA        AA     1111
     TT       AA        AA       11
     TT       AA        AA       11
     TT       AAAAAAAAAAAA       11
     TT       AAAAAAAAAAAA       11
     TT       AA        AA       11
     TT       AA        AA       11
     TT       AA        AA       11
     TT       AA        AA   1111111111
     TT       AA        AA   1111111111
```

```
 9999999999
999999999999
99        99
99        99
99        99
999999999999
999999999999
          99
          99
99        99
999999999999
 9999999999
```



**********

EXTERNAL SYMBOL DICTIONARY

| SYMBOL | TYPE | ID | ADDR | LENGTH | LD ID |
|---|---|---|---|---|---|
| LINEAR | SD | 01 | 000000 | 000B4 | |

```
                                                                                                              PAGE    1

  LOC  OBJECT CODE    ADDR1 ADDR2  STMT   SOURCE STATEMENT                                           F08APR70   9/17/70

000000                                1 LINEAR   CSECT                                                          00000100
000005                                2 R5       EQU   5                                                        00000200
000006                                3 R6       EQU   6                                                        00000300
000007                                4 R7       EQU   7                                                        00000400
000008                                5 R8       EQU   8                                                        00000500
000009                                6 R9       EQU   9                                                        00000600
00000A                                7 R10      EQU   10                                                       00000700
00000B                                8 R11      EQU   11                                                       00000800
000000 9CEC D00C            0000C     9          STM   14,12,12(13)   SAVE CALLER'S REGISTERS.                  00000900
000004 05C0                          10          BALR  12,0           ESTABLISH MY BASE REGISTER                00001000
000006                               11          USING *,12           LET THE ASSEMBLER KNOW                    00001100
000006 41F0 C042            00048    12          LA    15,SORTSAVE    ADDRESS OF MY SAVE AREA.                  00001200
00000A 50DF 0004            00004    13          ST    13,4(15)       SAVE CALLER'S SAVE AREA ADDRESS.          00001300
00000E 50FD 0008            00008    14          ST    15,8(13)       CHAIN MY SAVE AREA IN.                    00001400
000012 18DF                          15          LR    13,15          ESTABLISH MY SAVE AREA.                   00001500


                                     17 *&&&&&&&&&&&&&&&&&&&&&&&&&&&&&&&&&&&&&&&&&&&&&&&&&&&&&&&&&&&&&&&&&&&&&& 00001700
                                     18 *        THERE IS SOMETHING WRONG WITH THIS SORTING ROUTINE, YOU        00001800
                                     19 *        HAVE BEEN GIVEN A DUMP SHOWING THE CONTENTS OF STORAGE         00001900
                                     20 *        AFTER THE SORT HAS BEEN COMPLETED. USING THE DUMP AND          00002000
                                     21 *        THIS PROGRAM LISTING, FIND THE ERROR THAT CAUSED THE           00002100
                                     22 *        SORT TO FAIL TO WORK CORRECTLY. YOU HAVE BEEN GIVEN A DECK     00002200
                                     23 *        TO MAKE CHANGES TO AND RUN TO GET THE ROUTINE WORKING.         00002300
                                     24 *&&&&&&&&&&&&&&&&&&&&&&&&&&&&&&&&&&&&&&&&&&&&&&&&&&&&&&&&&&&&&&&&&&&&&& 00002400
```

```
LINEAR
    ****A2********
   * START LINEAR  *
   *SELECTION SORT.*
   *               *
    ***************
           |
           |
           |
           V
   *****B2*********
   *               *
   *INITIALIZE LOOP*
   *COUNT FOR WHOLE*
   *     SORT.     *
   *               *
   ****************
           |
           |
           |
SORTPASS   V
   *****C2**********                                  *****C4**********
   *               *                                  *               *
   *INITIALIZE LOOP*                                  *EXCHANGE FIRST *
   * COUNT FOR ONE *<---<------------------------- +-->*  AND LOWEST.  *
   *     SCAN.     *                               |  *               *
   *               *                               |  ****************
   ****************                               | ****
           |                                       |*    *
           |                                       |* C4 *
           |                                       |*    *
           V                                       | ****
COMPARE  .*.                                       |        |
       D2   *.                                     |        V
     .* ITEMS *.                                   |      .*.
    .*IN CORRECT *. NO          **D3*******        |     D4   *.
   .* SEQUENCE ?  .* ------->*  *SAVE ADDRESS *    |  NO .*     *.
  *.            .*            *  OF NEW LOW   *   +---- *.END OF SORT ?.*
   *.         .*              *    ITEM.     *         *.         .*
    *.      .*                *              *          *.       .*
     *.   .*                   ***********            *.     .*
      *.*                            |                   * YES
       *                             |                   |
**D1*******                          |                   |
*         *                          |                   |
* GET ADDRESS *                      |<------------------|
*OF NEXT ITEM IN* ------->*.          |                   |
*    LIST.    *           *.         V                   V
*         *                *.      .*.                 ****E4*********
***********                 *.   D2   *.              *               *
     A                       *.*     *.                * TAKE A DUMP.  *
     |                     .*        *.               *               *
     |                  NO .*          *. YES  ****    ***************
     |                     *.END OF LIST ?.* --->* C4 *
     |                     *.          .*      *    *
     |                       *.      .*         ****
     |                         *.  .*
     |                           *
     |
     +----------------
```

```
LOC   OBJECT CODE    ADDR1 ADDR2  STMT   SOURCE STATEMENT                                          F08APR70   9/17/70

                                   26 ***********************************************************************  00002600
                                   27 *         THIS IS A SAMPLE OF A LINEAR SELECTION SORT.                  00002700
                                   28 *                                                                       00002800
                                   29 *         THE SELECTION SORT WORKS ON THE PRINCIPLE OF FINDING THE      00002900
                                   30 *         SMALLEST DATA ITEM AND MOVING IT TO THE LOW END OF THE LIST   00003000
                                   31 *         AND THEN FINDING THE NEXT SMALLEST DATA ITEM AND MOVING       00003100
                                   32 *         IT, ETC., ETC., ETC.                                          00003200
                                   33 *                                                                       00003300
                                   34 *         THIS PARTICULAR SAMPLE WILL SORT A LIST OF HALF-WORD          00003400
                                   35 *         QUANTITIES IN THE LIST CALLED 'INPUT'.                        00003500
                                   36 *                                                                       00003600
                                   37 ***********************************************************************  00003700

                                   39 *         INITIALIZE THE REGISTERS FOR THE OUTER LOOP.                  00003900
                                   40 *         THE PROGRAM WILL LOOP FROM THE START TO THE END OF THE LIST   00004000
                                   41 *         ADVANCING ONE ITEM EACH PASS.                                 00004100
000014 989B C0A2            000A8  42           LM    R9,R11,=A(INPUT,2,INPTEND-3)                            00004200

                                   44 *         INITIALIZE THE REGISTERS FOR THE INNER (SELECTING) LOOP.      00004400
                                   45 *         THE PROGRAM WILL LOOP FROM THE LOGICAL START OF THE LIST      00004500
                                   46 *         TO THE END, COMPARING EACH ITEM AS IT GOES.                   00004600
000018 9867 C09A            000A0  47 SORTPASS LM    R6,R7,=A(2,INPTEND-1)                                   00004700
00001C 1889                        48           LR    R8,R9          ADDRESS OF THE START OF THE LIST         00004800
00001E 1858                        49           LR    R5,R8          ASSUME THAT IT'S THE LOWEST VALUE.       00004900

                                   51 *         SEARCH FOR THE SMALLEST VALUE IN THE LIST                     00005100
                                   52 *         THE PROGRAM WILL SAVE THE ADDRESS OF THE LOWEST VALUE THAT    00005200
                                   53 *         IT FINDS, FOR EACH SCAN OF THE LIST.                          00005300
000020 D501 5000 8000 00000 00000  54 COMPARE  CLC   0(2,R5),0(R8)  COMPARE TWO VALUES                        00005400
000026 47D0 C026            0002C  55           BNH   LOWER          BRANCH, PREVIOUS LOW STILL HOLDS         00005500
00002A 1858                        56           LR    R5,R8          NEW LOW FOUND, SAVE ITS ADDRESS          00005600
00002C 8786 C01A            00020  57 LOWER    BXLE  R8,R6,COMPARE  CONTINUE TO END OF LIST                  00005700

                                   59 *                                                                       00005900
                                   60 *         AT THE END OF ANY ONE PASS, REG 5 ADDRESSES THE SMALLEST      00006000
                                   61 *         VALUE LEFT IN THE LIST.                                       00006100
                                   62 *                                                                       00006200
000030 D701 9000 5000 00000 00000  63           XC    0(2,R9),0(R5)  MOVE LOWEST TO LOW END OF LIST           00006300
000036 D701 5000 9000 00000 00000  64           XC    0(2,R5),0(R9)  MOVE THE LARGER VALUE TO PLACE THAT      00006400
00003C D701 9000 5000 00000 00000  65           XC    0(2,R9),0(R5)  LOWEST HAD PREVIOUSLY OCCUPIED.          00006500
000042 879A C012            00018  66           BXLE  R9,R10,SORTPASS     CONTINUE UNTIL END OF LIST REACHED.  00006600

000046 0000                        68           DC    H'0'           CREATE A DUMP TO SEE OUTPUT LIST         00006800
```

```
 LOC  OBJECT CODE    ADDR1 ADDR2  STMT   SOURCE STATEMENT                                          F08APR70   9/17/70
000048                                70 SORTSAVE DS    18F                                                      00007000


                                      72 *         AT THE END OF EXECUTION, THE SORTED INPUT SHOULD WIND UP       00007200
                                      73 *         HERE, IN ASCENDING SEQUENCE..                                  00007300
000090 000E000500290010               74 INPUT     DC    H'14,5,41,16,3'                                          00007400
00009A                                75 INPTEND   EQU   *                                                        00007500
                                      76           END                                                            00007600
0000A0 0000000200000099               77                 =A(2,INPTEND-1)
0000A8 0000009000000002               78                 =A(INPUT,2,INPTEND-3)
```

9/17/70

| POS.ID | REL.ID | FLAGS | ADDRESS |
|---|---|---|---|
| 01 | 01 | 0C | 0000A4 |
| 01 | 01 | 0C | 0000A8 |
| 01 | 01 | 0C | 0000B0 |

9/17/70

```
SYMBOL    LEN  VALUE  DEFN     REFERENCES

COMPARE  00006 000020 00054    0057
INPTEND  00001 00009A 00075    0042  0047  0077  0078
INPUT    00002 000090 00074    0042  0078
LINEAR   00001 000000 00001
LOWER    00004 00002C 00057    0055
R10      00001 00000A 00007    0066
R11      00001 00000B 00008    0042
R5       00001 000005 00002    0049  0054  0056  0063  0064  0065
R6       00001 000006 00003    0047  0057
R7       00001 000007 00004    0047
R8       00001 000008 00005    0048  0049  0054  0056  0057
R9       00001 000009 00006    0042  0048  0063  0064  0065  0066
SORTPASS 00004 000018 00047    0066
SORTSAVE 00004 000048 00070    0012


NO STATEMENTS FLAGGED IN THIS ASSEMBLY
*STATISTICS*     SOURCE RECORDS (SYSIN) =     76
*OPTIONS IN EFFECT*   LIST, NODECK, LOAD, NORENT, XREF, NOTEST, ALGN, OS, LINECNT =  55
  107 PRINTED LINES
```

```
 F44-LEVEL LINKAGE EDITOR OPTIONS SPECIFIED MAP,LET,LIST,NCAL
           VARIABLE OPTIONS USED -  SIZE=(45056,6144)-          DEFAULT OPTION(S) USED
IEW0000              ENTRY UTILITY


                                                    MODULE MAP


  CONTROL SECTION                          ENTRY

    NAME     ORIGIN  LENGTH                  NAME   LOCATION     NAME   LOCATION     NAME   LOCATION     NAME   LOCATION

  LINEAR        00      B4
  UTILITY       B8     5A0
                                           PRINT        11A    PCHKRETN     376

 ENTRY ADDRESS       B8
 TOTAL LENGTH       658

****GO        DOES NOT EXIST BUT HAS BEEN ADDED TO DATA SET
```

```
F.P. REGS.  00.015878 00015644   40.003B22 00015628   00.015724 6000284A   E2.E8E2E5 E3D6C340

REGS 0-7     FFFFFF2E 0006BFF8 0001D65C 00000000    0001A2E0 0005FA3E 00000002 0005FA41
REGS 8-15    0005FA42 0005FA40 00000002 0005FA3F    6F05F9AE 0005F9F0 0000C7D4 0005F9F0

000000    00000000 00000000 00000000 00000000    0005F9A8 00000000 FF060000 80000000  *..................9.............*
000020    00C40003 50006A3E FFA50001 4F05F9F0    0000FF00 00000000 FE040133 80000A1E  *..............90................*
000040    0006C498 0C000001 00001468 00005920    083D5600 0000996C 00040000 00007498  *..D............................*
000060    00040000 00007BC8 00040000 00007588    00000000 00012D10 00040000 0000751A  *.......H......................*

05F9A0    000068FF 00000000 90ECD00C 05C041F0    C04250DF 000450FD 000818DF 989BC0A2  *...............0................*
05F9C0    9867C09A 18891858 D5015000 800047D0    C0261858 8786C01A D7019000 5000D701  *........N...............P.....P.*
05F9E0    50009000 D7019000 5000879A C0120000    93329507 C006BF68 9332D7C3 600C600C  *....P.....................P.....*
05FA00    47FC90DC D5C3C020 94FE4770 93DE59A0    94FE4770 94CA9507 C0264780 93DE9140  *.0..N........................ *
05FA20    80054710 94CA47F0 94B05BD0 9512D503    D00494FE 478C9392 00030000 000E0000  *.......0......N................*
05FA40    0C299512 540094F6 00000002 0005FA41    0005FA38 00000002 0005FA3F 94FA4111  *.......6......................*
05FA60    90ECD00C 05C004F0 07004110 C0100511    0F05FB04 7FFF0A0E 58BC0010 9110BC74  *.......0......................*

060020    4A009BDE 40050000 47F095C6 48609BEE    8A600001 4770969E 48609C26 41660001  *.... ....0.F..................*
```



**********

```
VV        VV   AAAAAAAAAA   RRRRRRRRRR    IIIIIIIIII    AAAAAAAAAA   BBBBBBBBBB   LL            EEEEEEEEEEE
VV        VV  AAAAAAAAAAAA  RRRRRRRRRRR   IIIIIIIIII   AAAAAAAAAAAA  BBBBBBBBBBB  LL            EEEEEEEEEEE
VV        VV  AA        AA  RR        RR      II       AA        AA  BB        BB  LL            EE
VV        VV  AA        AA  RR        RR      II       AA        AA  BB        BB  LL            EE
VV        VV  AA        AA  RR        RR      II       AA        AA  BB       BB   LL            EE
VV        VV  AAAAAAAAAAAA  RRRRRRRRRRR       II       AAAAAAAAAAAA  BBBBBBBBBB   LL            EEEEEEEE
VV        VV  AAAAAAAAAAAA  RRRRRRRRRR        II       AAAAAAAAAAAA  BBBBBBBBBB   LL            EEEEEEEE
 VV      VV   AA        AA  RR    RR          II       AA        AA  BB       BB   LL            EE
  VV    VV    AA        AA  RR     RR         II       AA        AA  BB        BB  LL            EE
   VV  VV     AA        AA  RR      RR        II       AA        AA  BB        BB  LL            EE
    VVVV      AA        AA  RR       RR   IIIIIIIIII   AA        AA  BBBBBBBBBBBB  LLLLLLLLLLLL  EEEEEEEEEEEE
     VV       AA        AA  RR        RR  IIIIIIIIII   AA        AA  BBBBBBBBBBBB  LLLLLLLLLLLL  EEEEEEEEEEEE
```

```
 9999999999
999999999999
99        99
99        99
99        99
999999999999
999999999999
          99
          99
99        99
999999999999
 9999999999
```

EXTERNAL SYMBOL DICTIONARY

| SYMBOL | TYPE | ID | ADDR | LENGTH | LD ID |
|---|---|---|---|---|---|
| CARDSCAN | SD | 01 | 000000 | 0006F8 | |
| PCHKRETN | ER | 02 | | | |
| READ | ER | 03 | | | |
| EOF | ER | 04 | | | |

```
  LOC  OBJECT CODE    ADDR1 ADDR2  STMT   SOURCE STATEMENT                                                F08APR70   9/16/70

000000                                1 CARDSCAN CSECT                                                                  00000100
                                      2          COPY  MHMBEGIN                                                         00000200
000000                                3 R0       EQU   0                                                                00000700
000001                                4 R1       EQU   1                                                                00000800
000002                                5 R2       EQU   2                                                                00000900
000003                                6 R3       EQU   3                                                                00001000
000004                                7 R4       EQU   4                                                                00001100
000005                                8 R5       EQU   5                                                                00001200
000006                                9 R6       EQU   6                                                                00001300
000007                               10 R7       EQU   7                                                                00001400
000008                               11 R8       EQU   8                                                                00001500
000009                               12 R9       EQU   9                                                                00001600
00000A                               13 R10      EQU   10                                                               00001700
00000B                               14 R11      EQU   11                                                               00001800
00000C                               15 R12      EQU   12                                                               00001900
00000D                               16 R13      EQU   13                                                               00002000
00000E                               17 R14      EQU   14                                                               00002100
00000F                               18 R15      EQU   15                                                               00002200
000000 90EC D00C            0000C    19          STM   R14,R12,12(R13)     SAVE THE CALLER'S REGISTERS                  00002400
000004 05C0                          20          BALR  R12,0               ESTABLISH PROGRAM BASE                       00002500
000006                               21          USING *,R12               LET THE ASSEMBLER KNOW.                      00002600
000006 41F0 C6A2            006A8    22          LA    R15,SAVEAREA        ADDRESS OF MY SAVE AREA                      00002700
00000A 5CFD 0008            00008    23          ST    R15,8(R13)          BACKWARD CHAIN                               00002800
00000E 50DF 0004            00004    24          ST    R13,4(R15)          FORWARD CHAIN                                00002900
000012 18DF                          25          LR    R13,R15             ESTABLISH MY SAVE AREA                       00003000
000014 D703 D008 D008 00008 00008    26          XC    8(4,R13),8(R13)     TERMINATE THE FORWARD CHAIN                  00003100
                                     27 *        END OF STANDARD ENTRY LINKAGE CONVENTIONS.                               00003200
                                     28          PRINT OFF                                                              00000300
```

```
LOC  OBJECT CODE    ADDR1 ADDR2  STMT   SOURCE STATEMENT                                    F08APR70   9/16/70

                                  36 *                                 ************************************    00001100
                                  37 *                                 * VARIABLE LENGTH FIELD PROCESSING. *    00001200
                                  38 *                                 * -------- ------ ----- ----------- *    00001300
                                  39 *                                 ************************************    00001400


                                  41 ********************************************************************    00001600
                                  42 *                                                                      00001700
                                  43 *        AS YOU ARE CERTAINLY NOW AWARE, WE DO NOT ALWAYS KNOW THE     00001800
                                  44 *        LENGTH OF SOME DATA FIELDS AT ASSEMBLY TIME, SO WE NEED       00001900
                                  45 *        SOME TECHNIQUE FOR CODING INSTRUCTION SEQUENCES TO COPE       00002000
                                  46 *        WITH VARIABLE LENGTH DATA FIELDS. LET US EXAMINE SOME         00002100
                                  47 *        OF THESE.                                                     00002200
                                  48 *                                                                      00002300
                                  49 ********************************************************************    00002400


                                  51 ********************************************************************    00002600
                                  52 *                                                                      00002700
                                  53 *        IN THESE FIRST FEW EXAMPLES, ASSUME THAT WE ARE DEALING       00002800
                                  54 *        WITH A DATA FIELD WHICH HAS A HALF-WORD LENGTH FIELD          00002900
                                  55 *        PRECEEDING THE CHARACTER DATA WE WANT TO MANIPULATE (THE      00003000
                                  56 *        VARIABLE-LENGTH FIELD). THAT IS..                             00003100
                                  57 *                                                                      00003200
                                  58 *        DS    0H                                                      00003300
000002E 0022                      59 VARIABLE DC    AL2(B-A)            LENGTH                              00003400
000030 E3C8C9E240C9D540           60 A        DC    C'THIS IN AN UNKNOWN LENGTH MESSAGE.'                   00003500
000052                            61 B        EQU   *                                                       00003600
                                  62 *                                                                      00003700
                                  63 *        ASSUME ALSO THAT THE ADDRESS OF THE WHOLE MESS IS IN          00003800
                                  64 *        REGISTER 3, AND THAT WE WANT TO MOVE ONLY THE DATA TO         00003900
                                  65 *        A PLACE CALLED 'MESSAGE'.                                     00004000
                                  66 *                                                                      00004100
                                  67 *        +------+       +------+-------------------------+            00004200
                                  68 *        |   +--+------>| LEN. | A VARIABLE LENGTH FIELD.|            00004300
                                  69 *        +------+       +------+-------------------------+            00004400
                                  70 *        REG. 3         0      2                        LEN.+2        00004500
                                  71 *                                                                      00004600
                                  72 ********************************************************************    00004700
```

```
LOC   OBJECT CODE    ADDR1 ADDR2  STMT   SOURCE STATEMENT                                                F08APR70   9/16/70
                                   74 *                                  **********************                 00004900
                                   75 *                                  * SOLUTION 1: A LOOP *                 00005000
                                   76 *                                  * -------- -- - ---- *                 00005100
                                   77 *                                  **********************                 00005200


                                   79 *         +------+      +------+-------------------------+               00005400
                                   80 *         |   +--+------>| LEN. | A VARIABLE LENGTH FIELD.|               00005500
                                   81 *         +------+      +------+-------------------------+               00005600
                                   82 *         REG. 3        0      2                       LEN.+2            00005700


000052 4130 C028            0002E   84 LOOPSAMP LA    R3,VARIABLE         FIRST, WE'LL TRY A LOOPING TECHNIQUE 00005900
000056 4843 0000            00000   85          LH    R4,0(R3)            GET LENGTH INTO REGISTER 4.          00006000
00005A 4153 0002            00002   86          LA    R5,2(R3)            GET DATA ADDRESS INTO REG 5          00006100
00005E 4160 C078            0007E   87          LA    R6,MESSAGE          OUTPUT AREA ADDRESS INTO REG. 6      00006200
                                    88 *                                                                       00006300
                                    89 *         OK, NOW WE ARE ALL SET TO LOOP, USING A 'TRAILING DECISION'.  00006400
                                    90 *         THE BCT AND BCTR INSTRUCTIONS ARE IDEAL FOR THIS KIND OF LOOP. 00006500
                                    91 *                                                                       00006600
                                    92 *         BUT YOU KNOW THAT...                                          00006700
                                    93 *                                                                       00006800
                                    94 *         THERE IS HOWEVER, ONE FAULT WITH THE BCT INSTRUCTION          00006900
                                    95 *         IF THE REGISTER HAS AN INITIAL VALUE OF ZERO, WE LOOP FOR A   00007000
                                    96 *         VERY, VERY LONG TIME.. SO, WE HAD BETTER TEST FOR ZERO FIRST. 00007100
                                    97 *                                                                       00007200
000062 1244                         98          LTR   R4,R4               IF REGISTER 4 CONTAINS ZERO          00007300
000064 4780 C078            0007E   99          BZ    AROUND              BRANCH AROUND LOOP. (MOVE NO DATA)   00007400
000068                             100 LOOP     EQU   *                   HERE GOES THE LOOP.......            00007500
000068 D200 6000 5000 00000 00000  101          MVC   0(1,R6),0(R5)       MOVE ONE BYTE FROM IN TO OUT         00007600
00006E 4155 0001            00001  102          LA    R5,1(R5)            POINT TO NEXT INPUT BYTE             00007700
000072 4166 0001            00001  103          LA    R6,1(R6)            POINT TO NEXT OUTPUT LOCATION        00007800
000076 4640 C062            00068  104          BCT   R4,LOOP             AND CONTINUE TO END OF FIELD.        00007900
00007A 47F0 C0AC            000A6  105          B     MODIFY                                                 00008000
00007E                             106 AROUND   EQU   *                                                      00008100
00007E 4040404040404040            107 MESSAGE  DC    40C' '                                                 00008200
```

```
LOC  OBJECT CODE    ADDR1 ADDR2  STMT   SOURCE STATEMENT                                    F08APR70   9/16/70

                                 109 *                    ****************************************          00008400
                                 110 *                    * SOLUTION 2: INSTRUCTION MODIFICATION. *          00008500
                                 111 *                    * -------- -- ----------- ------------- *          00008600
                                 112 *                    ****************************************          00008700


                                 114 ********************************************************************** 00008900
                                 115 *                                                                      00009000
                                 116 *        OK, THAT WORKS, BUT IT REQUIRES US TO EXECUTE 4 INSTRUCTIONS  00009100
                                 117 *        PER BYTE OF DATA IN THE FIELD. THIS CAN TAKE CONSIDERABLE TIME 00009200
                                 118 *        SO, IT MAY BE PREFERABLE THAT WE DO THIS SOME OTHER WAY.      00009300
                                 119 *        SO, LET US EXAMINE ANOTHER METHOD,'INSTRUCTION MODIFICATION'. 00009400
                                 120 *        REMEMBER THAT THE SECOND BYTE OF AN ASSEMBLED STORAGE-TO-     00009500
                                 121 *        STORAGE INSTRUCTION CONTAINS THE LENGTH OF DATA TO BE USED.    00009600
                                 122 *                                                                      00009700
                                 123 ******** NOTE: REMEMBER THAT REGISTER 3 STILL POINTS TO THE VARIABLE   00009800
                                 124 *        LENGTH FIELD.                                                 00009900
                                 125 *                                                                      00010000
                                 126 ********************************************************************** 00010100

0000A6 4843 0000            00000  128 MODIFY   LH    R4,0(R3)            GET LENGTH OF DATA INTO REG 4.  00010300
                                 129 *                                                                      00010400
                                 130 *        AT THIS POINT, WE MUST CONSIDER THAT THE LENGTH FIELD IN AN   00010500
                                 131 *        ASSEMBLED S-S INSTRUCTION IS ONE LESS THAN THE LENGTH OF TRUE 00010600
                                 132 *        DATA TO BE USED. SO, SINCE WE ARE GOING TO DO OUR CHANGING    00010700
                                 133 *        TO A MACHINE INSTRUCTION, WE HAD BETTER SUBTRACT ONE FIRST.   00010800
                                 134 *                                                                      00010900
0000AA 0640                      135          BCTR  R4,0                SUBTRACT ONE FROM LENGTH        00011000
0000AC 4240 C0AB            00081 136          STC   R4,MOVE+1           STORE LENGTH INTO INSTRUCTION   00011100
                                 137 *                                  CALLED 'MOVE'.                  00011200
0000B0 D200 C078 3002 0007E 00002 138 MOVE     MVC   MESSAGE(0),2(R3)    MOVE THE REQUIRED DATA.         00011300


                                 140 *        THIS, OF COURSE, WORKS VERY NICELY FOR FIELDS LESS THAN OR    00011500
                                 141 *        EQUAL TO 256 BYTES.                                           00011600


                                 143 ********************************************************************** 00011800
                                 144 *                                                                      00011900
                                 145 *        THE PRECEEDING TECHNIQUE HAS ONE MAJOR DISADVANTAGE, IT MADE  00012000
                                 146 *        A PERMANENT MODIFICATION TO AN INSTRUCTION, WHICH PREVENTS US 00012100
                                 147 *        FROM BEING COMPLETELY RE-ENTRANT.(SUPPOSE WE GET INTERRUPTED  00012200
                                 148 *        BETWEEN THE STC AND MVC INSTRUCTIONS AND ANOTHER PROGRAM GETS 00012300
                                 149 *        CONTROL AND MAKES IT ALL THE WAY THROUGH THE SEQUENCE BEFORE  00012400
                                 150 *        WE GET CONTROL BACK -- THE LENGTH IS NOT WHAT WE HAD WHEN     00012500
                                 151 *        WE LOST CONTROL....)                                          00012600
                                 152 *                                                                      00012700
                                 153 *        THERE MUST BE SOME WAY AROUND THIS PARTICULAR PROBLEM, AND    00012800
                                 154 *        IT IS CALLED THE EXECUTE INSTRUCTION.                         00012900
                                 155 *                                                                      00013000
                                 156 ********************************************************************** 00013100
```

```
LOC  OBJECT CODE    ADDR1 ADDR2  STMT   SOURCE STATEMENT                                          F08APR70   9/16/70

                                 158 *                                 **************************          00013300
                                 159 *                                 * SOLUTION 3: "EXECUTE". *          00013400
                                 160 *                                 * -------- -- ---------- *          00013500
                                 161 *                                 **************************          00013600

                                 163 ************************************************************************ 00013800
                                 164 *                                                                      00013900
                                 165 *        WHAT THE EXECUTE INSTRUCTION DOES IS EFFECTIVELY IDENTICAL    00014000
                                 166 *        TO THE PRECEEDING TECHNIQUE (INSTRUCTION MODIFICATION), BUT   00014100
                                 167 *        IT'S MAJOR ADVANTAGE IS THAT IT ONLY EFFECTS AN INSTRUCTION   00014200
                                 168 *        MODIFICATION.. EVERYTHING IS DONE WITHIN THE CPU'S LOGICAL    00014300
                                 169 *        UNIT, OR WHATEVER THEY CALL THAT THING...                     00014400
                                 170 *                                                                      00014500
                                 171 *        IN REALITY, IT'S ALL DONE WITH SODIUM PENTATHOL AND HYPNOTIC  00014600
                                 172 *        SUGGESTION.                                                   00014700
                                 173 *                                                                      00014800
                                 174 *        THE EXECUTE INSTRUCTION TAKES THE LOW-ORDER BYTE OF THE       00014900
                                 175 *        REGISTER NAMED IN THE FIRST OPERAND, (IN THIS CASE REG. 4),   00015000
                                 176 *        AND LOGICALLY 'ORS' THAT BYTE WITH THE SECOND BYTE OF THE     00015100
                                 177 *        INSTRUCTION THAT IS NAMED IN THE SECOND OPERAND, ('MOVEDATA'  00015200
                                 178 *        IN THE EXAMPLE), AND THEN EXECUTES THE INSTRUCTION JUST       00015300
                                 179 *        MODIFIED (EFFECTIVELY) AS THOUGH IT EXISTED IN THE SPACE      00015400
                                 180 *        WHERE THE EXECUTE INSTRUCTION ITSELF WAS LOCATED.             00015500
                                 181 *        BUT YOU KNOW ALL THAT ALREADY, SO WATCH...                    00015600
                                 182 *        YOU WILL NOTICE THAT AT NO TIME DOES MY HAND LEAVE MY WRIST.  00015700
                                 183 *                                                                      00015800
                                 184 ******** NOTE: REMEMBER THAT REGISTER 3 STILL POINTS TO THE VARAIBLE  00015900
                                 185 *        LENGTH FIELD.                                                 00016000
                                 186 *                                                                      00016100
                                 187 ************************************************************************ 00016200

0000B6 4843 0000            00000  189          LH    R4,0(R3)          GET LENGTH INTO REGISTER 4        00016400
0000BA 0640                        190          BCTR  R4,0              REDUCE LENGTH BY ONE.             00016500
0000BC 4440 C0BE            000C4  191          EX    R4,MOVEDATA       ALTER THE 'MOVEDATA' INSTRUCTION  00016600
                                   192 *                                EFFECTIVE ALTERATION ONLY, AND MOVE 00016700
                                   193 *                                THE DATA TO MESSAGE..             00016800
0000C0 47F0 C0C4            000CA  194          B     GOONBY            BRANCH TO SHOW THAT WE DO NOT     00016900
                                   195 *                                WANT TO EXECUTE THE MVC IN LINE.  00017000

0000C4 D200 C078 3002 0007E 00002  197 MOVEDATA MVC   MESSAGE(0),2(R3)                                   00017200
                                   198 ************************************************************************ 00017300
                                   199 *                                                                    00017400
                                   200 *        IF YOU CONSIDER THE FACT THAT THIS SAME SEQUENCE OF EVENTS  00017500
                                   201 *        EXISTS WITH ANY INSTRUCTION AND THE 'EXECUTE' INSTRUCTION,  00017600
                                   202 *        YOU'LL SEE WHAT A REALLY POWERFUL INSTRUCTION IT CAN BE,    00017700
                                   203 *        PARTICULARLY IN A RE-ENTRANT ENVIRONMENT.                   00017800
                                   204 *                                                                    00017900
                                   205 ************************************************************************ 00018000
0000CA 47F0 C0CA            000D0  206 GOONBY   B     GETACARD+2                                          00018100
```

```
LOC  OBJECT CODE    ADDR1 ADDR2  STMT   SOURCE STATEMENT                                           F08APR70    9/16/70
                                  208 *                                  **************************           00018300
                                  209 *                                  * CONTROL CARD SCANNING. *           00018400
                                  210 *                                  * ------- ---- --------- *           00018500
                                  211 *                                  **************************           00018600


                                  213 *++++++++++++++++++++++++++++++++++++++++++++++++++++++++++++++++++++++ 00018800
                                  214 *                                                                       00018900
                                  215 *        THERE ARE, OF COURSE, SOME OTHER PROBLEMS THAT CAN ARISE WITH  00019000
                                  216 *        VARIABLE LENGTH FIELDS. TO WIT: WE MIGHT NOT ALWAYS KNOW THE   00019100
                                  217 *        LENGTH OF THE FIELD WE ARE TO PROCESS (AS WE HAD IN THE FIRST  00019200
                                  218 *        EXAMPLES). SO, WHAT DO YOU DO THEN ???                         00019300
                                  219 *                                                                       00019400
                                  220 *        THE BEST, AND ONE OF THE MOST FREQUENTLY USED METHODS IS TO    00019500
                                  221 *        SEPARATE THE FIELDS FROM EACH OTHER BY USING SPECIAL           00019600
                                  222 *        CHARACTERS, CALLED "DELIMITERS", WHICH MAY NOT BE USED WITHIN  00019700
                                  223 *        THE FIELDS THEMSELVES. THEN, HAVING ONCE FOUND THE START       00019800
                                  224 *        OF A VARIABLE FIELD, WE NEED ONLY TO LOCATE THE DELIMITER      00019900
                                  225 *        AT THE END OF THE FIELD, SUBTRACT THE ADDRESSES, AND EUREKA... 00020000
                                  226 *        YOU HAVE THE FIELD'S LENGTH. FROM THERE ON, YOU'RE HOME FREE,  00020100
                                  227 *        BECAUSE YOU ALREADY KNOW HOW TO USE THE "EXECUTE" INSTRUCTION, 00020200
                                  228 *        DON'T YOU ?? A SIMPLE NODDING OF THE HEAD "YES" WILL SUFFICE.  00020300
                                  229 *                                                                       00020400
                                  230 *        ONE OF THE FASTEST, SLICKEST TECHNIQUES OF LOCATING DELIMITERS 00020500
                                  231 *        IS TO USE THE TRANSLATE-AND-TEST INSTRUCTION (TRT), AS IT IS   00020600
                                  232 *        USED IN THE FOLLOWING PROGRAM.                                 00020700
                                  233 *                                                                       00020800
                                  234 *++++++++++++++++++++++++++++++++++++++++++++++++++++++++++++++++++++++ 00020900
```

```
LCC  OBJECT CODE    ADDR1 ADDR2  STMT   SOURCE STATEMENT                                    F08APR70   9/16/70

                                 236 ***********************************************************************  00021100
                                 237 *                                                                        00021200
                                 238 *        THIS IS AN EXAMPLE OF A CONTROL STATEMENT SCANNING ROUTINE      00021300
                                 239 *        FOR A HYPOTHETICAL DATA FILE MAINTENANCE PROGRAM.               00021400
                                 240 *                                                                        00021500
                                 241 *        THIS PROGRAM IS "KEY-WORD DRIVEN" IN THAT THERE ARE CERTAIN     00021600
                                 242 *        "KEY" WORDS OR PHRASES IN THE CONTROL CARD THAT TELL THE        00021700
                                 243 *        PROGRAM THE MEANING OF THE VARIABLE LENGTH DATA THAT FOLLOWS.   00021800
                                 244 *                                                                        00021900
                                 245 *        A "KEYWORD" IS GENERALLY SEPARATED FROM IT'S DATA BY AN EQUAL   00022000
                                 246 *        SIGN. KEYWORDS ARE SEPARATED FROM OTHER KEYWORDS BY COMMAS.     00022100
                                 247 *                                                                        00022200
                                 248 *        THIS ROUTINE READS A CARD FROM THE INPUT STREAM AND SCANS       00022300
                                 249 *        IT FOR THE FOLLOWING KEYWORD VALUES 'NAME, ADDR, PHONE, CITY,   00022400
                                 250 *        STATE, DEPEND, ZIP, AND STATUS'. WHEN IT FINDS ONE OF THE       00022500
                                 251 *        KEYWORDS, IT MOVES THE DATA THAT FOLLOWS THE KEYWORD TO THE     00022600
                                 252 *        CORRECT LOCATION IN STORAGE.                                    00022700
                                 253 *                                                                        00022800
                                 254 *        THE CARD INFORMATION MUST BE OF THE FORM :                      00022900
                                 255 *                                                                        00023000
                                 256 * VERB   NAME=MAFARKLE,ADDR=123SMAIN,DEPEND=(MARK,SPARKLE,SIMON,GAR),   *00023100
                                                     PHONE=1234567                                            00023200
                                 257 *                                                                        00023300
                                 258 *        WHERE THE DATA IS DESCRIBED BY KEYWORDS FOLLOWED BY VALUES      00023400
                                 259 *        FOR THE KEYWORDS. THE 'VERB' TELLS THE PROGRAM WHAT ACTION TO   00023500
                                 260 *        TAKE (ADD, DELETE, OR ALTER) THE DATA IN IT'S MASTER FILE.      00023600
                                 261 *                                                                        00023700
                                 262 *        KEYWORDS MUST BE SEPARATED FROM THEIR VALUES BY AN EQUAL SIGN.  00023800
                                 263 *        PARAMETERS ARE SEPARATED FROM EACH OTHER BY A COMMA.            00023900
                                 264 *        SUB-PARAMETER LISTS ARE ENCLOSED IN PARENTHESES, WITH EACH      00024000
                                 265 *        VALUE IN THE LIST SEPARATED FROM THE OTHERS BY A COMMA.         00024100
                                 266 *                                                                        00024200
                                 267 *        THE CARD STATEMENT IS "FREE-FORM" IN THAT THE KEY-WORDS         00024300
                                 268 *        MAY BE ABSENT OR APPEAR IN ANY ORDER, AN ADVANTAGE IF           00024400
                                 269 *        YOU'RE AN AMATEUR KEY-PUNCH OPERATOR.                           00024500
                                 270 *                                                                        00024600
                                 271 ***********************************************************************  00024700


                                 273 ***********************************************************************  00024900
                                 274 *                                                                        00025000
                                 275 *        AT THE END OF THIS PROGRAM YOU WILL FIND A SERIES OF            00025100
                                 276 *        QUESTIONS ABOUT THE PROGRAM. FIRST, SCAN OVER THE CODE          00025200
                                 277 *        AND THEN ANSWER THE QUESTIONS. THEY WILL LEAD YOU TO            00025300
                                 278 *        MANY OF THE MAJOR ITEMS OF INTEREST ABOUT THE PROGRAM.          00025400
                                 279 *                                                                        00025500
                                 280 ***********************************************************************  00025600
```

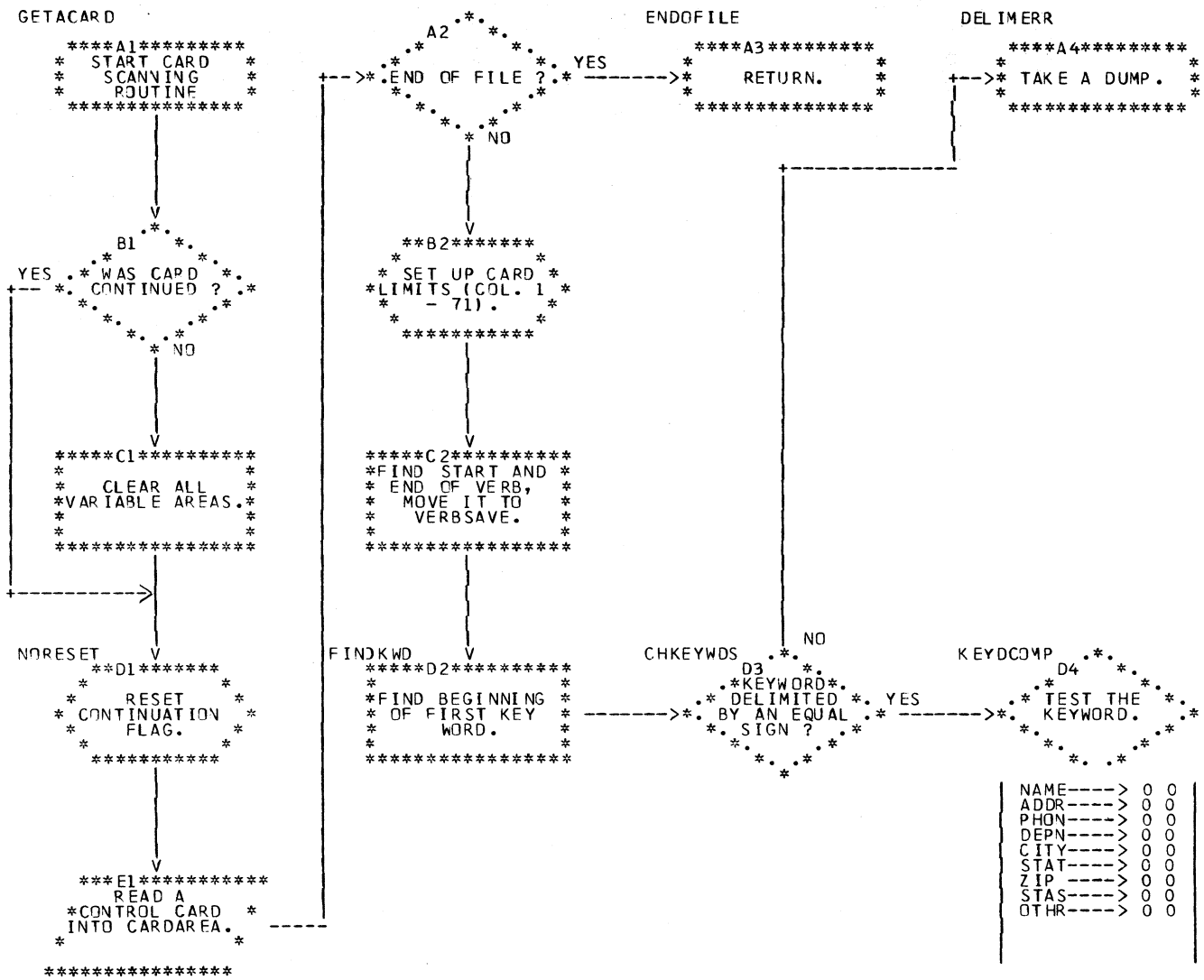
GETACARD
A1
START CARD SCANNING ROUTINE
B1
WAS CARD CONTINUED ?
YES
NO
C1
CLEAR ALL VARIABLE AREAS.
NORESET
D1
RESET CONTINUATION FLAG.
E1
READ A CONTROL CARD INTO CARDAREA.
A2
END OF FILE ?
YES
NO
B2
SET UP CARD LIMITS (COL. 1 - 71).
C2
FIND START AND END OF VERB, MOVE IT TO VERBSAVE.
FINDKWD
D2
FIND BEGINNING OF FIRST KEY WORD.
ENDOFILE
A3
RETURN.
CHKEYWDS
D3
KEYWORD DELIMITED BY AN EQUAL SIGN ?
YES
NO
DELIMERR
A4
TAKE A DUMP.
KEYDCOMP
D4
TEST THE KEYWORD.
NAME----> 0 0
ADDR----> 0 0
PHON----> 0 0
DEPN----> 0 0
CITY----> 0 0
STAT----> 0 0
ZIP ----> 0 0
STAS----> 0 0
OTHR----> 0 0

```
 LOC  OBJECT CODE    ADDR1 ADDR2  STMT   SOURCE STATEMENT                                          F08APR70   9/16/70

                                  324 *                                                                        00030000
                                  325 *        READ A CARD TO BE SCANNED.                                      00030100
                                  326 *                                                                        00030200
0000CE 0017                       327 GETACARD DC    H'23'                TAKE A DUMP TO SEE THE TABLE.         00030300
0000D0 9180 C36D      00373       328          TM    FLAGS,CONTINUE       CONTINUATION EXPECTED ?               00030400
0000D4 4710 C0DC            000E2 329          BO    NORESET              YES, DON'T RESET DATA FIELDS YET.     00030500
0000D8 9240 C2EA      002F0       330          MVI   VERBSAVE,C' '        NO, BLANK OUT FIELDS FOR NEW CARD     00030600
0000DC D281 C2EB C2EA 002F1 002F0 331          MVC   VERBSAVE+1(L'VERBSAVE+L'NAMESAVE+L'DEPNDSV-1),VERBSAVE  00030700
0000E2 947F C36D      00373       332 NORESET  NI    TURN,OFF-CONTINUE                                         00030800
0000E6 4110 C296            0029C 333          LA    R1,CARDPTR           ADDRESS OF INPUT AREA ADDRESS.        00030900
0000EA 58F0 C6EA            006F0 334          L     R15,=V(READ)                                               00031000
0000EE 05EF                       335          BALR  R14,R15              READ A CARD FROM INPUT STREAM.        00031100
0000F0 58F0 C6EE            006F4 336          L     R15,=V(EOF)          ADDRESS OF END OF FILE INDICATOR.     00031200
0000F4 9500 F003      00003       337          CLI   3(R15),0             IS END OF FILE INDICATED ?            00031300
0000F8 4770 C46E            00474 338          BNE   ENDOFILE             YES, QUIT.                            00031400
                                  339 *                                                                        00031500
                                  340 *        START SCANNING FOR THE FIRST NON-BLANK CHARACTER IN THE CARD,   00031600
                                  341 *        THIS WILL BE THE START OF THE VERB.                             00031700
                                  342 *                                                                        00031800
0000FC 4180 C29A            002A0 343          LA    R8,CARDAREA          NO, BEGIN CARD SCAN WITH COLUMN 1.    00031900
000100 4160 0001            00001 344          LA    R6,1                 INCREMENT                             00032000
000104 4170 C2E0            002E6 345          LA    R7,CARDAREA+70       UPPER LIMIT (COLUMN 71)               00032100
000108 8686 C290            00296 346          BXH   R8,R6,NOVERB         SCAN FOR NON-BLANK                    00032200
00010C 9540 8000      00000       347          CLI   0(R8),C' '           IS  THIS A BLANK ??                   00032300
000110 4780 C102            00108 348          BE    *-8                  YES, CONTINUE SCAN                    00032400
000114 1B22                       349          SR    R2,R2                NON-BLANK FOUND.                      00032500
000116 DD07 8000 C36E 00000 00374 350          TRT   0(8,R8),TRTABLE      LOCATE END OF VERB                    00032600
00011C 47F2 C11A            00120 351          B     *+4(R2)              BRANCH BASED ON DELIMITER             00032700
000120 47F0 C290            00296 352          B     DELIMERR             NO DELIMITER, FIELD TOO LONG          00032800
000124 47F0 C12A            00130 353          B     FINDKYWD             BLANK, FIND FIRST KEYWORD.            00032900
000128 47F0 C290            00296 354          B     DELIMERR             COMMA, DELIMITER ERROR.               00033000
00012C 47F0 C290            00296 355          B     DELIMERR             EQUAL SIGN, INVALID DELIMITER.        00033100

                                  357 *                                                                        00033300
                                  358 *        LOCATE THE END OF THE VERB (DELIMITED BY A BLANK), MOVE THE     00033400
                                  359 *        VERB TO 'VERBSAVE', AND FIND THE NEXT NON-BLANK CHARACTER,      00033500
                                  360 *        WHICH WILL BE THE START OF THE FIRST KEYWORD.                   00033600
                                  361 *                                                                        00033700
000130 1B18                       362 FINDKYWD SR    R1,R8                FIND END OF VERB.                     00033800
000132 4780 C290            00296 363          BZ    VERBERR              LENGTH = 0, ERROR.                    00033900
000136 0610                       364          BCTR  R1,0                 - 1 FOR EXECUTE.                      00034000
000138 4410 C14A            00150 365          EX    R1,VERBMVC           MOVE VERB TO SAVE AREA.               00034100
00013C 4181 8000            00000 366          LA    R8,0(R1,R8)          POINT TO 1ST CHAR AFTER VERB.         00034200
000140 8686 C290            00296 367          BXH   R8,R6,NOKEYWD        SCAN FOR FIRST KEY WORD.              00034300
000144 9540 8000      00000       368          CLI   0(R8),C' '           NON-BLANK ?                           00034400
000148 4780 C13A            00140 369          BE    *-8                  NO, CONTINUE SCAN.                    00034500
00014C 47F0 C150            00156 370          B     CHKEYWDS             FOUND, SCAN KEYWORD.                  00034600

000150 D200 C2EA 8000 002F0 00000 372 VERBMVC  MVC   VERBSAVE(0),0(R8)                                         00034800
```

```
 LOC  OBJECT CODE    ADDR1 ADDR2  STMT   SOURCE STATEMENT                                          F08APR70   9/16/70

                                  374 *                KEY-WORD BREAK-OUT ROUTINE.                                00035000
                                  375 *                                                                           00035100
                                  376 *          THIS ROUTINE LOCATES THE END OF A KEYWORD, COMPUTES              00035200
                                  377 *          IT'S LENGTH, AND BRANCHES TO THE APPROPRIATE SUB-ROUTINE.        00035300
                                  378 *                                                                           00035400
000156 1B22                       379 CHKEYWDS SR     R2,R2                RESET INDEX FOR BRANCH TABLE.            00035500
000158 DD06 8000 C36E 00000 00374 380          TRT    0(7,R8),TRTABLE      SCAN FOR DELIMITER (SHOULD BE =)         00035600
00015E 47F2 C15C            00162 381          B      *+4(R2)              BRANCH BASED ON DELIMITER.               00035700
000162 47F0 C290            00296 382          B      DELIMERR             NO DELIMITER, KEYWORD IS TOO LONG.       00035800
000166 47F0 C290            00296 383          B      DELIMERR             BLANK, INCORRECT DELIMITER.              00035900
00016A 47F0 C290            00296 384          B      DELIMERR             COMMA, INCORRECT DELIMITER.              00036000
00016E 4140 0006            00006 385          LA     R4,6                 EQUAL SIGN, SET UP TABLE INDEX.          00036100
000172 4150 C1C2            001C8 386          LA     R5,KEYWDEND          ADDRESS OF END OF TABLE                  00036200
000176 4130 C198            0019E 387          LA     R3,KEYWDTB           ADDRESS OF KEYWORD TABLE.                00036300
00017A 1B18                       388          SR     R1,R8                LENGTH OF KEYWORD                        00036400
00017C 478C C290            00296 389          BZ     NOKEYWD              = 0, NO KEYWORD.                         00036500
000180 4120 C1C8            001CE 390          LA     R2,KWDBRTAB          ADDRESS OF KEYWORD BRANCH TABLE.         00036600
000184 0610                       391          BCTR   R1,0                 - 1 FOR EXECUTE                          00036700
000186 4410 C192            00198 392 KEYDCOMP EX     R1,KEYWDCLC          COMPARE FOR KEY-WORD.                    00036800
00018A 0782                       393          BCR    8,R2                 FOUND, GO TO APPROPRIATE ROUTINE.        00036900
00018C 4122 0004            00004 394          LA     R2,4(R2)             NO MATCH, POINT TO NEXT BRANCH ENTRY 00037000
000190 8734 C180            00186 395          BXLE   R3,R4,KEYDCOMP       CONTINUE SEARCH TO END OF TABLE.         00037100
000194 47F0 C290            00296 396          B      INVALIDK             INVALID KEY-WORD, ERROR.                 00037200

000198 D500 3000 8000 00000 00000 398 KEYWDCLC CLC    0(0,R3),0(R8)                                               00037400

                                  400 *                                                                           00037600
                                  401 *          TABLE OF VALID KEYWORDS.                                         00037700
                                  402 *                                                                           00037800
00019E D5C1D4C54040               403 KEYWDTB  DC     CL6'NAME'                                                  00037900
0001A4 C1C4C4D94040               404          DC     CL6'ADDR'                                                  00038000
0001AA D7C8D6D5C540               405          DC     CL6'PHONE'                                                 00038100
0001B0 C4C5D7C5D5C4               406          DC     CL6'DEPEND'                                                00038200
0001B6 C3C9E3E84040               407          DC     CL6'CITY'                                                  00038300
0001BC E2E3C1E3C540               408          DC     CL6'STATE'                                                 00038400
0001C2 E9C9D7404040               409          DC     CL6'ZIP'                                                   00038500
0001C8                            410 KEYWDEND EQU    *                                                          00038600
0001C8 E2E3C1E3E4E2               411          DC     CL6'STATUS'                                                00038700
                                  412 *                                                                           00038800
                                  413 *          TABLE OF BRANCHES TO KEY-WORD SUBROUTINES.                       00038900
                                  414 *          ENTRIES MATCH KEYWORDS IN 'KEYWDTB'                              00039000
                                  415 *                                                                           00039100
0001CE                            416 KWDBRTAB DS     0H                                                         00039200
0001CE 47F0 C28E            00294 417          B      NAME                 THIS IS JUST AN OLD "BRANCH TABLE".      00039300
0001D2 47F0 C28E            00294 418          B      ADDRESS                                                    00039400
0001D6 47F0 C28E            00294 419          B      PHONE                                                      00039500
0001DA 47F0 C1E8            001EE 420          B      DEPENDNT                                                   00039600
0001DE 47F0 C28E            00294 421          B      CITY                                                       00039700
0001E2 47F0 C28E            00294 422          B      STATE                                                      00039800
0001E6 47F0 C28E            00294 423          B      ZIPCODE                                                    00039900
0001EA 47F0 C28E            00294 424          B      STATUS                                                     00040000
```

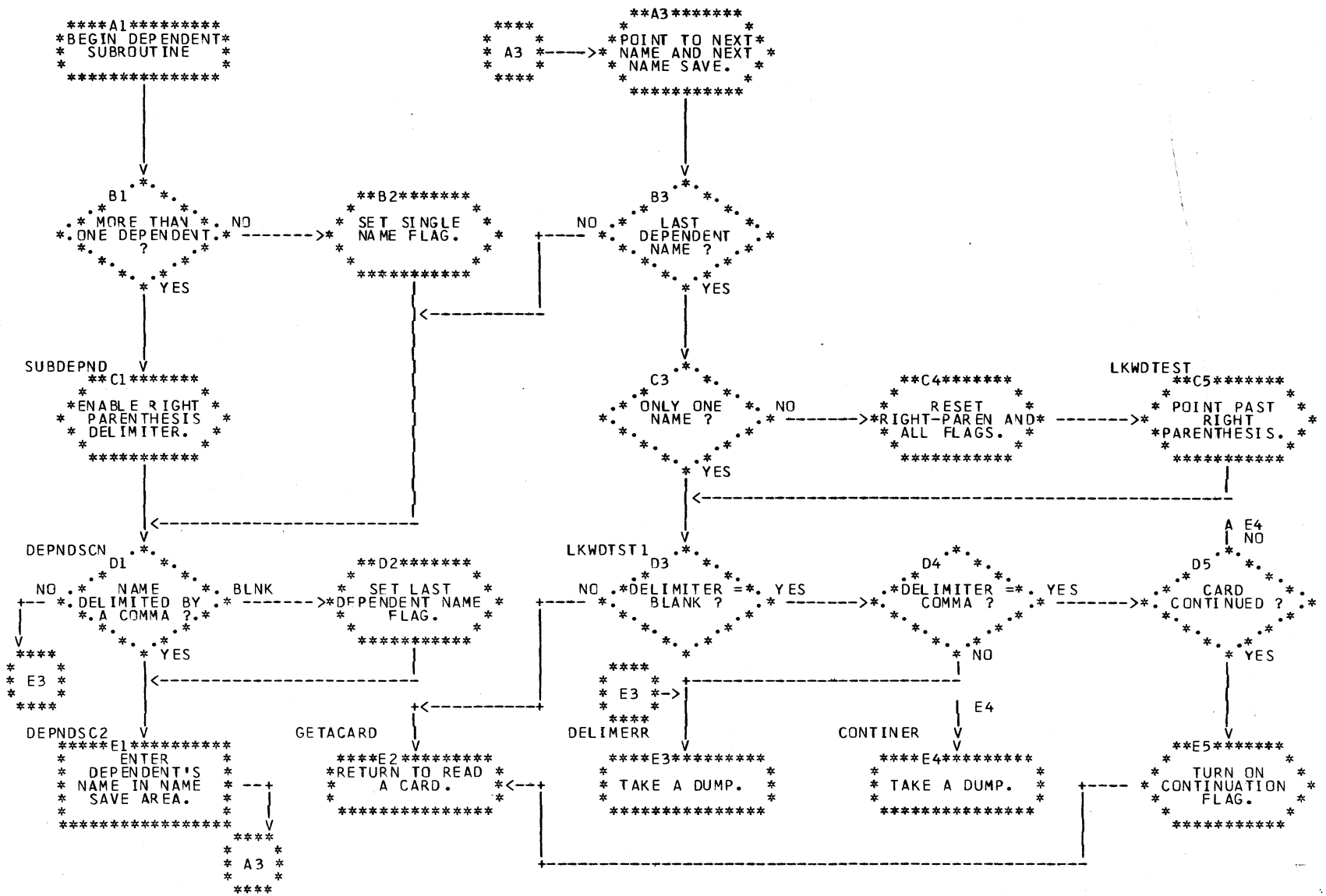
A1
BEGIN DEPENDENT SUBROUTINE
A3
POINT TO NEXT NAME AND NEXT NAME SAVE.
B1
MORE THAN ONE DEPENDENT ?
NO
YES
B2
SET SINGLE NAME FLAG.
B3
LAST DEPENDENT NAME ?
NO
YES
SUBDEPND
C1
ENABLE RIGHT PARENTHESIS DELIMITER.
C3
ONLY ONE NAME ?
NO
YES
C4
RESET RIGHT-PAREN AND ALL FLAGS.
LKWDTEST
C5
POINT PAST RIGHT PARENTHESIS.
DEPNDSCN
D1
NAME DELIMITED BY A COMMA ?
NO
BLNK
YES
D2
SET LAST DEPENDENT NAME FLAG.
LKWDTST1
D3
DELIMITER = BLANK ?
NO
YES
D4
DELIMITER = COMMA ?
YES
NO
D5
CARD CONTINUED ?
NO
YES
E3
DEPNDSC2
E1
ENTER DEPENDENT'S NAME IN NAME SAVE AREA.
A3
GETACARD
E2
RETURN TO READ A CARD.
DELIMERR
E3
TAKE A DUMP.
CONTINER
E4
TAKE A DUMP.
E4
E5
TURN ON CONTINUATION FLAG.

```
LOC  OBJECT CODE    ADDR1 ADDR2  STMT   SOURCE STATEMENT                                                F08APR70   9/16/70

                                 426 *                                                                                00040200
                                 427 *        THIS ROUTINE BREAKS OUT THE SEPARATE NAMES IN THE 'DEPENDENT'           00040300
                                 428 *        SUB-PARAMETER LIST,(WHICH MAY CONTAIN FROM 1-10 SEPARATE                00040400
                                 429 *        NAMES), AND MOVES THEM TO THE AREA NAMED 'DEPNDSV'.                     00040500
                                 430 *                                                                                00040600
0001EE                           431 DEPENDNT EQU   *                                                                00040700
0001EE 4181 8002          00002  432          LA    R8,2(R1,R8)          POINT TO DATA VALUE                        00040800
0001F2 41F0 C309          0030F  433          LA    R15,DEPNDSV          SAVE AREA FOR DEPENDENTS NAMES             00040900
0001F6 954D 8000     00000       434          CLI   0(R8),C'('           IS THIS A SUB-PARAMETER LIST ?             00041000
0001FA 4780 C252          00258  435          BE    SUBDEPND             YES, SET UP FOR MULTIPLE NAMES.            00041100
0001FE 9620 C36D     00373       436          OI    FLAGS,ONLYONE        NO, SET THE SINGLE-NAME FLAG.              00041200
000202                           437 DEPNDSCN EQU   *                                                                00041300
000202 1B22                      438          SR    R2,R2                                                           00041400
000204 DD0A 8000 C36E 00000 00374 439          TRT   0(11,R8),TRTABLE     SCAN FOR THE END OF A NAME.                00041500
00020A 4780 C290          00296  440          BZ    DELIMERR             NAME TOO LONG, ERROR.                      00041600
00020E 47F2 C20C          00212  441          B     *+4(R2)              BRANCH ACCORDING TO DELIMITER FOUND.       00041700
000212 47F0 C290          00296  442          B     DELIMERR             NO DELIMITER, ERROR.                       00041800
000216 47F0 C290          00296  443          B     DELIMERR             BLANK, INVALID DELIMITER.                  00041900
00021A 47F0 C220          00226  444          B     DEPNDSC2             COMMA, PROCEED                             00042000
00021E 47F0 C290          00296  445          B     DELIMERR             EQUAL SIGN, INVALID DELIMITER.             00042100
000222 9640 C36D     00373       446          OI    FLAGS,LASTONE        SET LAST SUB-PARAMETER INDICATOR.          00042200
000226                           447 DEPNDSC2 EQU   *                                                                00042300
000226 1B18                      448          SR    R1,R8                GET LENGTH OF FIELD.                       00042400
000228 0610                      449          BCTR  R1,0                 -1 FOR EXECUTE                             00042500
00022A 4410 C24C          00252  450          EX    R1,DEPNDMVC          MOVE A DEPENDENT'S NAME.                   00042600
00022E 41FF 000A          0000A  451          LA    R15,10(R15)          POINT TO NEXT SPOT IN NAME SAVE AREA       00042700
000232 4181 8002          00002  452          LA    R8,2(R1,R8)          POINT PAST DELIMITER.                      00042800
000236 9140 C36D     00373       453          TM    FLAGS,LASTONE        IS THIS THE LAST KEYWORD ?                 00042900
00023A 4780 C1FC          00202  454          BZ    DEPNDSCN             NO, CONTINUE SCAN.                         00043000
00023E 9200 C3CB     003D1       455          MVI   TRTABLE+C')',0       DE-ACTIVATE THE RIGHT-PARENTHESIS.         00043100
000242 9720 C36D     00373       456          XI    FLAGS,ONLYONE        YES, WAS IT ALSO THE ONLY ONE              00043200
000246 4780 C262          00268  457          BZ    LKWDTST1             YES, GO CHECK FOR LAST KEY-WORD.           00043300
00024A 949F C36D     00373       458          NI    TURN,OFF-LASTONE-ONLYONE                                        00043400
00024E 47F0 C25E          00264  459          B     LKWDTEST             NO, GO CHECK FOR LAST KEY-WORD.            00043500


000252 D200 F000 8000 00000 00000 461 DEPNDMVC MVC   0(0,R15),0(R8)                                                 00043700


000258 9210 C3CB     003D1       463 SUBDEPND MVI   TRTABLE+C')',16      ACTIVATE DELIMITER FOR END OF A SUB-       00043900
00025C 4188 0001          00001  464          LA    R8,1(R8)              PARAMETER LIST. POINT PAST THE             00044000
000260 47F0 C1FC          00202  465          B     DEPNDSCN              LEFT-PAREN. AND GO SCAN THE LIST.          00044100
```

```
 LOC  OBJECT CODE    ADDR1 ADDR2  STMT   SOURCE STATEMENT                                    F08APR70   9/16/70

                                  467 *        THIS ROUTINE DETERMINES IF THERE ARE MORE KEYWORDS, OR IF THE  00044300
                                  468 *        CARD IS CONTINUED. (NON-BLANK IN COLUMN 72).                   00044400
                                  469 *                                                                       00044500
000264 4181 8001            00001  470 LKWDTEST LA    R8,1(R1,R8)        POINT TO DELIMITER AFTER VALUE.      00044600
000268 9540 8000      00000        471 LKWDTST1 CLI   0(R8),C' '         IS THE DELIMITER A BLANK ?           00044700
00026C 4780 C0C8            000CE  472          BE    GETACARD           YES, END OF INPUT STATEMENT          00044800
000270 956B 8000      00000        473          CLI   0(R8),C','         NO, IS IT A COMMA ?                  00044900
000274 4770 C290            00296  474          BNE   DELIMERR           NO, INCORRECT DELIMITER.             00045000
000278 4188 0001            00001  475          LA    R8,1(R8)           IS A COMMA, POINT TO NEXT CHARACTER. 00045100
00027C 9540 8000      00000        476          CLI   0(R8),C' '         IS IT A BLANK ?                      00045200
000280 4770 C150            00156  477          BNE   CHKEYWDS           NO, SCAN NEXT KEYWORD.               00045300
000284 9540 7001      00001        478          CLI   1(R7),C' '         YES, IS THE CARD CONTINUED ?         00045400
000288 4780 C290            00296  479          BE    CONTINER           NO, ERROR IN CONTINUATION.           00045500
00028C 9680 C36D      00373        480          OI    FLAGS,CONTINUE     YES, SET CONTINUATION INDICATION.    00045600
000290 47F0 C0C8            000CE  481          B     GETACARD           AND GO READ ANOTHER CARD.            00045700


                                  483 ************************************************************************ 00045900
                                  484 *                                                                       00046000
                                  485 *        ANSWER THESE QUESTIONS ABOUT THE CARD SCANNING PROGRAM.        00046100
                                  486 *                                                                       00046200
                                  487 *        1. IN THE INSTRUCTION LABELED 'CHKEYWDS', WE ZERO REG 2 EVERY  00046300
                                  488 *           TIME. WHY ??                                                00046400
                                  489 *                                                                       00046500
                                  490 *        2. IN THE "DEPENDNT" SUB-ROUTINE, WHICH INSTRUCTION(S) SET(S)  00046600
                                  491 *           UP THE ADDRESS OF THE NEXT SUB-PARAMETER BEFORE SCANNING ?  00046700
                                  492 *                                                                       00046800
                                  493 *        3. WHICH INSTRUCTION INDICATES THAT A '(' LEFT-PARENTHESIS     00046900
                                  494 *           HAS BEEN FOUND ?                                            00047000
                                  495 *                                                                       00047100
                                  496 *       THE NEXT TWO QUESTIONS REFER TO THE 'DEPENDNT' SUBROUTINE.      00047200
                                  497 *                                                                       00047300
                                  498 *        4. WHICH INSTRUCTION ENABLES THE ')' RIGHT-PARENTHESIS         00047400
                                  499 *           DELIMITER WHEN A SUB-PARAMETER LIST IS FOUND ?              00047500
                                  500 *                                                                       00047600
                                  501 *        5. USING THE CODE STARTING AT 'LKWDTEST', WOULD THE            00047700
                                  502 *           COMBINATION: COMMA, BLANK AND COL. 72 BLANK BE VALID ?      00047800
                                  503 *                                                                       00047900
                                  504 *        6. ACCORDING TO THE INITIALIZATION CODE, WHICH COLUMNS         00048000
                                  505 *           OF THE CARD MAY CONTAIN "VERBS" OR "KEYWORDS" ?             00048100
                                  506 *                                                                       00048200
                                  507 *        7. WHAT IS THE MAXIMUM ALLOWABLE "VERB" LENGTH ?               00048300
                                  508 *                                                                       00048400
                                  509 *        8. WHICH INSTRUCTION(S) MOVE(S) THE DEPENDENT'S NAME(S) TO     00048500
                                  510 *           THE 'DEPNDSV' AREA ?                                        00048600
                                  511 *                                                                       00048700
                                  512 ******** WHEN YOU REACH THIS POINT, DISPLAY THE RED SIDE OF YOUR        00048800
                                  513 *        "ANSWER CUE".                                                  00048900
                                  514 *                                                                       00049000
                                  515 ************************************************************************ 00049100
```

```
 LOC  OBJECT CODE    ADDR1 ADDR2  STMT   SOURCE STATEMENT                                    F08APR70   9/16/70

000294                            517 NAME     EQU    *                THESE NAMES ARE HERE TO MAKE THE     00049300
000294                            518 ADDRESS  EQU    *                 ASSEMBLER FIND SOLACE IN SYMBOL     00049400
000294                            519 CITY     EQU    *                 RESOLUTION, AND FOR NO OTHER        00049500
000294                            520 STATE    EQU    *                 PURPOSE. THE ROUTINES WHICH WOULD   00049600
000294                            521 ZIPCODE  EQU    *                 BE USED TO HANDLE THESE KEY-WORDS   00049700
000294                            522 STATUS   EQU    *                 DO NOT EXIST, FOR THE SAKE OF       00049800
000294 000B                       523 PHONE    DC     H'11'             SIMPLICITY OF THE EXAMPLE.          00049900


000296                            525 CONTINER EQU    *                IN A "REAL" PROGRAM, THESE WOULD     00050100
000296                            526 DELIMERR EQU    *                 BE NAMES OF ERROR ROUTINES THAT     00050200
000296                            527 NOVERB   EQU    *                 WOULD PROBABLY PRINT A DIAGNOSTIC   00050300
000296                            528 VERBERR  EQU    *                 MESSAGE INFORMING THE PROGRAM'S     00050400
000296                            529 NOKEYWD  EQU    *                 USER OF HIS SYNTAX ERROR.           00050500
000296                            530 INVALIDK EQU    *                                                     00050600
000296 0014                       531          DC     H'20'            ERROR, TAKE A DUMP.                  00050700
000298 47F0 C46E          00474   532          B      ENDOFILE         AND TERMINATE THE CARD SCAN.         00050800


00029C 000002A0                   534 CARDPTR  DC     A(CARDAREA)                                           00051000
0002A0                            535 CARDAREA DS     80C              INPUT BUFFER FOR A CARD              00051100
0002F0                            536 VERBSAVE DS     CL6              SAVE AREA FOR A VERB.                00051200
0002F6                            537 NAMESAVE DS     CL25             SAVE AREA FOR A NAME.                00051300
00030F                            538 DEPNDSV  DS     CL100            SAVE AREA FOR DEPENDENTS NAMES.      00051400
000373 00                         539 FLAGS    DC     X'0'                                                  00051500
0000FF                            540 OFF      EQU    255                                                   00051600
000373                            541 TURN     EQU    FLAGS                                                 00051700
000080                            542 CONTINUE EQU    X'80'            CONTINUATION FLAG.                   00051800
000040                            543 LASTONE  EQU    X'40'            LAST KEYWORD FOUND FLAG.             00051900
000020                            544 ONLYONE  EQU    X'20'            SINGLE KEY-WORD VALUE FLAG.          00052000
000374 0000000000000000           545 TRTABLE  DC     256X'00'                                              00052100
0003B4                            546          ORG    TRTABLE+C' '                                          00052200
0003B4 04                         547          DC     X'04'            BLANK                                00052300
0003DF                            548          ORG    TRTABLE+C','                                          00052400
0003DF 08                         549          DC     X'08'            COMMA                                00052500
0003F2                            550          ORG    TRTABLE+C'='                                          00052600
0003F2 0C                         551          DC     X'0C'            EQUAL SIGN.                          00052700
000474                            552          ORG    TRTABLE+256                                           00052800
```

```
F.P. REGS.  00.06DCC1 0001C529   80.C6D476 00070FA8   40.06DBA6 0006D0E8   00.01ADA0 00000000

REGS 0-7     FFFFFF2E 00000007 00000010 0002A410    00000006 0002A428 00000001 0002A546
REGS 8-15    0002A54A 00000000 0001DB08 00000000    6F02A266 0002A9C8 4F02A350 0002A5AB

000000    00000000 00000000 00000000 00000000    0002A260 00000000 FF040080 A000A93C  *................................*
000020    FFC50000 6F07E9F2 FFC50001 4F02A330    0000FF00 00000000 FF060231 80000000  *.E....Z2.E......................*
000040    000366A0 0C000000 000014D0 00005920    02C013A4 0000996C 00040000 00007498  *................................*
000060    00040000 C0007BC8 00040000 00007588    00000000 00012D10 00040000 0000751A  *.......H........................*

02A260    9CECD00C 05C041F0 C6A250FD 000850DF    000418DF D703D008 D00858F0 C022D201  *.......0F...........P......0..K.*
02A280    F000C026 47F0C04C 0002AC16 07FE0022    E3C8C9E2 40C9D540 C1D540E4 D5D2D5D6  *0....0..........THIS IN AN UNKNO*
02A2A0    E6D540D3 C5D5C7E3 C840D4C5 E2E2C1C7    C54B4130 C0284843 00004153 00024160  *WN LENGTH MESSAGE...............*
02A2C0    C0781244 4780C078 D2006000 50004155    00014166 00014640 C06247F0 C0A0E3C8  *........K............... ...0..TH*
02A2E0    C9E240C9 D540C1D5 40E4D5D2 D5D6E6D5    40D3C5D5 C7E3C840 D4C5E2E2 C1C7C54B  *IS IN AN UNKNOWN LENGTH MESSAGE.*
02A300    40404040 40404843 00000640 4240C0AB    D221CC78 30024843 00000640 4440C0BE  *       ..... . ..K........... . ..*
02A320    47F0C0C4 D200C078 300247F0 C0CA0017    9180C36D 4710C0DC 9240C2EA D281C2EB  *.0.DK......0......C...... B.K.B.*
02A340    C2EA947F C36D4110 C29658F0 C6EA05EF    58F0C6EE 9500F003 4770C46E 4180C29A  *B...C...B..0F....0F...0...D...B.*
02A360    41600001 4170C2E0 8686C290 95408000    4780C102 1B22DD07 8000C36E 47F2C11A  *......B...B.. ....A.......C..2A.*
02A380    47F0C290 47F0C12A 47F0C290 47F0C290    1B184780 C2900610 4410C14A 41818000  *.0B..0A..0B..0B.....B.....A.....*
02A3A0    8686C290 95408000 4780C13A 47F0C150    D200C2EA 80001B22 DD068000 C36E47F2  *..B.. ....A..0A.K.B.........C..2*
02A3C0    C15C47F0 C29047F0 C29047F0 C2904140    00064150 C1C24130 C1981B18 4780C290  *A..0B..0B..0B.. ....AB..A.....B.*
02A3E0    4120C1C8 C6104410 C1920782 41220004    8734C180 47F0C290 D5003000 8000D5C1  *..AH....A.........A..0B.N.....NA*
02A400    D4C54040 C1C4C4D9 4040D7C8 D6D5C540    C4C5D7C5 D5C4C3C9 E3E84040 E2E3C1E3  *ME  ADDR  PHONE DEPENDCITY  STAT*
02A420    C540E9C9 D7404040 E2E3C1E3 E4E247F0    C28E47F0 C28E47F0 C28E47F0 C1E847F0  *E ZIP   STATUS.0B..0B..0B..0AY.0*
02A440    C28E47F0 C28E47F0 C28E47F0 C28E4181    800241F0 C309954D 80004780 C2529620  *B..0B..0B..0B......0C.......B...*
02A460    C36D1B22 DD0A8000 C36E4780 C29047F2    C20C47F0 C29047F0 C29047F0 C22047F0  *C.......C...B..2B..0B..0B..0B..0*
02A480    C2909640 C36D1B18 06104410 C24C41FF    000A4181 80029140 C36D4780 C1FC9200  *B.. C.......B.......... C...A...*
02A4A0    C3CB9720 C36D4780 C262949F C36D47F0    C25ED2C0 F0008000 9210C3CB 41880001  *C...C...B...C..0B.K.0.....C.....*
02A4C0    47F0C1FC 41818001 95408000 4780C0C8    956B8000 477CC290 41880001 95408000  *.0A...... .....H......B...... ..*
02A4E0    4770C150 95407001 4780C290 9680C36D    47F0C0C8 000B0014 47F0C46E 0002A500  *..A.. ....B...C..0.H.....0D.....*
02A500    40C1C4C4 40C4C5D7 C5D5C47E 4DC5E9C5    D2C9C1D3 6BC1C2C1 C7C1C9D3 6BC5E9D4  * ADD DEPEND..EZEKIAL.ABAGAIL.EZM*
02A520    C5D9C5D3 C4C16BC8 C5D7E9C5 C2C1C86B    C8C5D9D4 C9D6D5C5 6BC3C8C1 E4D5C3C5  *ERELDA.HEPZEBAH.HERMIONE.CHAUNCE*
02A540    E85D4040 40404040 40404040 40404040    C1C4C440 40404040 40404040 40404040  *Y.                ADD            *
02A560    40404040 40404040 40404040 404040C5    E9C5D2C9 C1D34040 40C1C2C1 C7C1C9D3  *                EZEKIAL   ABAGAIL*
02A580    404040C5 E9D4C5D9 C5D3C4C1 40C8C5D7    E9C5C2C1 C8404C8 C5D9D4C9 D6D5C540  *   EZMERELDA HEPZEBAH  HERMIONE *
02A5A0    40C3C8C1 E4D5C3C5 E8404040 40404040    40404040 40404040 40404040 40404040  * CHAUNCEY                        *
02A5C0    40404040 40404040 40404040 40404040    40404000 00000000 00000000 00000000  *                    .............*
02A5E0    00000000 00000000 0000000C 00000000    00000000 00000000 00000000 00000000  *................................*
02A600    00000000 00000000 00000000 00000000    00000000 04000000 00000000 00000000  *................................*
02A620    00000000 00000000 00000000 00000000    00000000 00000000 00000000 000C0008  *................................*
02A640    00000000 00000000 00000000 00000000    00000C00 00000000 00000000 00000000  *................................*
02A660    00000000 00000000 00000000 00000000    00000000 00000000 00000000 00000000  *................................*
02A680    00000000 00000000 00000000 00000000    00000000 00000000 00000000 00000000  *................................*
02A6A0    00000000 00000000 00000000 00000000    00000000 00000000 00000000 00000000  *................................*
02A6C0    00000000 00000000 00000000 00000000    00000000 9200C3CB 9200C3EC 9400C36D  *.......................C...C...C.*
02A6E0    4160C4AC 1B22DDC8 6000C36E 47F2C48A    47F0C4EC 9640C36D 1B164780 C49C45E0  *..D.......C..2D..0D.. C.....D...*
02A700    C4EE9140 C36D4710 C6964161 600147F0    C47EE3C8 C5E2C56B C1D9C56B E3C8C56B  *D.. C...F......0D.THESE.ARE.THE.*
02A720    C6C9C5D3 C4E26BE4 E2C5C46B C2E86BE3    C8C56BC4 C9C3E3C9 D6D5606B C1D9E86B  *FIELDS.USED.BY.THE.DICTION..ARY.*
02A740    C2E4C9D3 C4C9D5C7 6BD7D9D6 C7D9C1D4    40000012 900FC58A 18310630 89300002  *BUILDING.PROGRAM .....E.........*
02A760    41F3C566 88300002 58BF0000 12BB4770    C52E58B0 C5CAD702 B000B000 D202F001  *.3E.............E...E.P.....K.0.*
02A780    C5CB4430 C55E41BB 300650B0 C5CA980F    C58A07FE 12BB4780 C54A4430 C5584780  *E...E.......E...E.......E...E...*
02A7A0    C528D202 C587B000 58B0C586 47F0C52E    58B0C5CA D202B000 F00147F0 C516D500  *E.K.E.....E..0E...E.K...0..0E.N.*
02A7C0    B0036000 D200B003 60000000 00000000    00000000 00000000 00000000 00000000  *....K...........................*
02A7E0    00000000 00000000 00000000 00000000    4AB0930A 47F09272 48E06000 42E0500C  *.......................0........*
02A800    96F0500C 89E00004 41EE0038 41660000    1B6E9261 500B47F0 92AC4111 00000A0A  *.0......................0........*
02A820    47F09028 00032DC0 00030090 00032DE0    0002A834 00000000 00000000 00000000  *.0.............................*
02A840    00000000 00000000 00000000 00000000    00000000 00000000 00000000 00000000  *................................*
02A860    00000000 00000000 00000000 00000000    00000000 00000000 00000000 00000000  *................................*
02A880    00000000 00000000 00000000 00000000    00000000 00000000 00000000 00000000  *................................*
```

```
02A8A0    00000000 00000000 00000000 00000000    00000000 00000000 00000000 00000000  *................................*
02A8C0    00000000 00000000 00000000 00000000    00000000 00000000 00000000 00000000  *................................*
02A8E0    00000000 00000000 00000000 00000000    00000000 00000000 00000000 001E58DD  *................................*
02A900    000498EC D00C07FE 960F100F 00036768    0002AF54 4F02A350 0002AEF8 FFFFFF2E  *...........................8....*
02A920    0002A4FC 0001DAFC 0002A28E 00000021    0002A2B2 0002A300 00019598 0001DAE0  *................................*
02A940    00000000 0001DB08 00000000 6F02A266    0002AEF8 0002AFFC 90ECD00C 05C004F0  *....................8...........0*

02AF00    C05650FD 000850DF 000418DF D703D008    D0085851 00009110 C0CE4710 C02C0700  *............P...................*
02AF20    4510C02A 8002AF9C 0A134110 C09E1805    58F01030 05EF58DD 000498EC D00C07FE  *................0...............*
02AF40    4510C04A 8002AF9C 0A149201 C10147F0    C038430A 000158E0 0002A908 0000000C  *.............A..0................*
02AF60    959891FE A0014750 4F02AF36 1207D938    0002A500 0002AF9C 0001DAFC 0002A28E  *...............R..................*
02AF80    00000021 0002A500 0002A300 00019598    0001DAE0 4F07D9F0 0007F020 00000000  *......................R0..0.....*
02AFA0    2D000000 003E0005 00008652 00281C7E    020366A0 00504000 00000001 0402AF40  *...................... ........ *
02AFC0    8000000C 00405000 C001C924 1207D938    0007F020 0B000001 10010050 00005000  *..... ....I...R...0.............*
02AFE0    00036648 00036748 00036748 00000050    00000001 00000000 0007E928 0000000C  *.........................Z.....*
```

```
LOC  OBJECT CODE    ADDR1 ADDR2  STMT   SOURCE STATEMENT                                        F08APR70   9/16/70

                                 554 ***********************************************************************  00053000
                                 555 *                                                                        00053100
                                 556 *        ANSWERS TO THE QUESTIONS ON THE CARD SCANNING PROGRAM.          00053200
                                 557 *                                                                        00053300
                                 558 *        1. TO ZERO THE INDEX VALUE USED TO INDEX INTO THE BRANCH        00053400
                                 559 *           TABLE.                                                       00053500
                                 560 *                                                                        00053600
                                 561 *        2. THE LOAD ADDRESS ' LA   R8,2(R1,R8)   POINT PAST DELIMITER'  00053700
                                 562 *           INSTRUCTION SETS UP THE ADDRESS.                             00053800
                                 563 *                                                                        00053900
                                 564 *        3. THE STATEMENT '   BE    SUBDEPND  ' INDICATES THAT A LEFT    00054000
                                 565 *           PARENTHESIS HAS BEEN FOUND.                                  00054100
                                 566 *                                                                        00054200
                                 567 *        4. THE STATEMENT 'SUBDEPND MVI   TRTABLE+C')',16  ' SETS        00054300
                                 568 *           THE RIGHT-PARENTHESIS UP AS A DELIMITER.                     00054400
                                 569 *                                                                        00054500
                                 570 *        5. NO. YOU WILL HAVE TO PUMP THE CODE TO PROVE THIS.            00054600
                                 571 *                                                                        00054700
                                 572 *        6. ONLY COLUMNS 2-71 MAY CONTIAN VERBS.                         00054800
                                 573 *                                                                        00054900
                                 574 *        7. THE MAXIMUM VERB SIZE IS 7 BYTES.                            00055000
                                 575 *                                                                        00055100
                                 576 *        8. THE STATEMENTS '  EX    R1,DEPNDMVC ' AND                    00055200
                                 577 *           'DEPNDMVC MVC   0(0,R15),0(R8) ' MOVE THE VERB TO THE        00055300
                                 578 *           'VERBSAVE' AREA.                                             00055400
                                 579 *                                                                        00055500
                                 580 ***********************************************************************  00055600
```

```
LOC  OBJECT CODE    ADDR1 ADDR2  STMT   SOURCE STATEMENT                                    F08APR70   9/16/70

                                 582 ***********************************************************************  00055800
                                 583 *                                                                        00055900
                                 584 *        SO ENDS THE FIRST OF THE TWO PROGRAMS CONTAINED IN THIS         00056000
                                 585 *        SECTION. THE NEXT PROGRAM IS NOT RELATED IN ANY WAY TO          00056100
                                 586 *        THE ONE YOU HAVE JUST BEEN THROUGH.                             00056200
                                 587 *                                                                        00056300
                                 588 *        THE PROGRAM IS BROKEN UP INTO TWO DISCRETE SECTIONS,            00056400
                                 589 *        EACH WITH IT'S OWN SET OF QUESTIONS. READ THE PROLOGUE          00056500
                                 590 *        TO EACH ROUTINE, SCAN OVER THE CODE, AND THEN ANSWER            00056600
                                 591 *        THE QUESTIONS, WHICH WILL DRAW YOUR ATTENTION TO SOME           00056700
                                 592 *        OF THE MORE IMPORTANT FACETS OF THE CODE. WRITE YOUR            00056800
                                 593 *        ANSWERS TO THE QUESTIONS IN THE LEFT MARGIN OF THE              00056900
                                 594 *        PAGE. THE ANSWERS WILL BE DISCUSSED IN THE WORK-SHOP            00057000
                                 595 *        SESSION ON THIS TOPIC. HAVE A BALL....                          00057100
                                 596 *                                                                        00057200
                                 597 ***********************************************************************  00057300
```

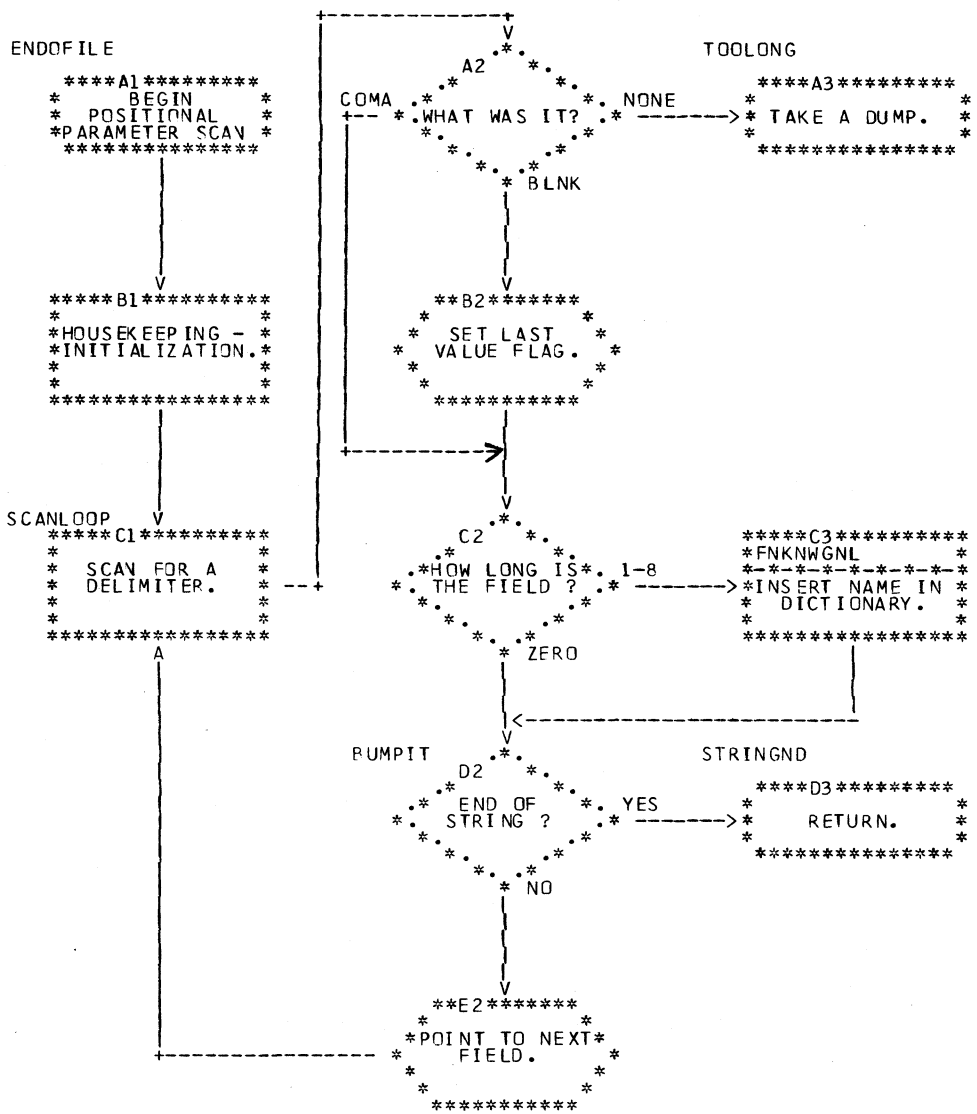
ENDOFILE
A1
BEGIN
POSITIONAL
PARAMETER SCAN
B1
HOUSEKEEPING -
INITIALIZATION.
SCANLOOP
C1
SCAN FOR A
DELIMITER.
A2
COMA
WHAT WAS IT?
NONE
TOOLONG
A3
TAKE A DUMP.
BLNK
B2
SET LAST
VALUE FLAG.
C2
HOW LONG IS
THE FIELD ?
1-8
C3
FNKNWGNL
INSERT NAME IN
DICTIONARY.
ZERO
BUMPIT
D2
END OF
STRING ?
YES
STRINGND
D3
RETURN.
NO
E2
POINT TO NEXT
FIELD.

```
LOC   OBJECT CODE     ADDR1 ADDR2  STMT   SOURCE STATEMENT                                    F08APR70   9/16/70

                                   613 ***********************************************************************  00058900
                                   614 *                                                                        00059000
                                   615 *        THIS ROUTINE WILL SCAN A SERIES OF CHARACTER STRINGS,           00059100
                                   616 *        SEPARATED BY COMMAS, FIND ALL THE INDIVIDUAL FIELDS, AND        00059200
                                   617 *        CHAIN THEM BY LENGTH, USING BACK-CHAINING (SEE DIAGRAM)         00059300
                                   618 *        INTO AN AREA CALLED 'DICTNARY'. THE START OF EACH CHAIN WILL    00059400
                                   619 *        BE POINTED TO BY AN ENTRY IN A 'THUMB INDEX'.                   00059500
                                   620 *                                                                        00059600
                                   621 *        THIS ROUTINE SEPARATES THE FIELDS AND LINKS TO THE              00059700
                                   622 *        DICTIONARY BUILDING ROUTINE. IT ALSO FINDS THE END OF THE       00059800
                                   623 *        CHARACTER STRING.                                               00059900
                                   624 *                                                                        00060000
                                   625 ***********************************************************************  00060100

000474 9200 C3CB      003D1        627 ENDOFILE MVI   TRTABLE+C')',0      RESET RIGHT-PAREN.                  00060300
000478 9200 C3EC      003F2        628          MVI   TRTABLE+C'=',0      DISABLE THE '=' DELIMITER.          00060400
00047C 9400 C36D      00373        629          NI    TURN,OFF-ALL        RESET ALL FLAGS                     00060500
000480 4160 C4AC            004B2  630          LA    R6,STRINGS          ADDRESS OF THE STRINGS              00060600
000484 1B22                        631 SCANLOOP SR    R2,R2               RESET BRANCH INDEX                  00060700
000486 DDC8 6000 C36E 00000 00374  632          TRT   0(9,R6),TRTABLE     FIND A DELIMITER                    00060800
00048C 47F2 C48A            00490  633          B     *+4(R2)             BRANCH BASED ON THE DELIMITER       00060900
000490 47F0 C4EC            004F2  634          B     TOOLONG             ERR, NONE FOUND.                    00061000
000494 9640 C36D      00373        635          OI    TURN,ON+LASTONE     BLANK, THIS IS LAST VALUE.          00061100
000498 1B16                        636          SR    R1,R6               COMMA, GET FIELD LENGTH.            00061200
00049A 4780 C49C            004A2  637          BZ    BUMPIT              NULL FIELD, CONTINUE                00061300
00049E 45E0 C4EE            004F4  638          BAL   R14,FNKNWGNL        LINK TO DICTIONARY BUILDER.         00061400
0004A2 9140 C36D      00373        639 BUMPIT   TM    FLAGS,LASTONE       WAS THIS THE LAST ?                 00061500
0004A6 4710 C696            0069C  640          BO    STRINGND            YES, QUIT.                          00061600
0004AA 4161 6001            00001  641          LA    R6,1(R1,R6)         NO, POINT TO NEXT FIELD             00061700
0004AE 47F0 C47E            00484  642          B     SCANLOOP            CONTINUE SCAN.                      00061800

                                   644 STRINGS  DC    C'THESE,ARE,THE,FIELDS,USED,BY,THE,DICTION-,ARY,BUILDING,00062000
0004B2 E3C8C5E2C56BC1D9                           ,PROGRAM '                                                   00062100
0004F1 00
0004F2 0012                        645 TOOLONG  DC    H'18'                                                    00062200

                                   647 ***********************************************************************  00062400
                                   648 *                                                                        00062500
                                   649 *        ANSWER THESE QUESTIONS ABOUT THE SCANNING ROUTINE.              00062600
                                   650 *                                                                        00062700
                                   651 *        1. WHAT IS THE MAXIMUM VALID LENGTH OF A FIELD ?                00062800
                                   652 *                                                                        00062900
                                   653 *        2. WHICH DELIMITERS ARE "ACTIVE" IN THIS ROUTINE ?              00063000
                                   654 *                                                                        00063100
                                   655 *        3. WHICH DELIMITER INDICATES THE END OF THE ENTIRE STRING ?     00063200
                                   656 *                                                                        00063300
                                   657 *        4. WOULD A NULL FIELD IN THE STRING BE VALID ?                  00063400
                                   658 *                                                                        00063500
                                   659 *        5. COULD YOU CALL THIS A "KEY-WORD DRIVEN" ROUTINE ?            00063600
                                   660 *                                                                        00063700
                                   661 ***********************************************************************  00063800
```

```
LOC  OBJECT CODE    ADDR1 ADDR2  STMT   SOURCE STATEMENT                                    F08APR70   9/16/70

                                 663 ***********************************************************************  00064000
                                 664 *                                                                        00064100
                                 665 *        ANSWERS TO THE QUESTIONS ON THE SCANNING ROUTINE.               00064200
                                 666 *                                                                        00064300
                                 667 *        1. THE MAXIMUM LENGTH OF A FIELD IS 8 BYTES.                    00064400
                                 668 *                                                                        00064500
                                 669 *        2. THE BLANK AND THE COMMA ARE ACTIVE DELIMITERS.               00064600
                                 670 *                                                                        00064700
                                 671 *        3. THE BLANK INDICATES THE END OF THE STRING.                   00064800
                                 672 *                                                                        00064900
                                 673 *        4. YES, A NULL FIELD IS VALID.                                  00065000
                                 674 *                                                                        00065100
                                 675 *        5. NO, THIS IS A FORM OF "POSITIONAL" VALUES (PARAMETERS).      00065200
                                 676 *                                                                        00065300
                                 677 ******** WHEN YOU HAVE GOTTEN HERE, DISPLAY THE GREEN SIDE OF YOUR      00065400
                                 678 *        "ANSWER CUE".                                                   00065500
                                 679 *                                                                        00065600
                                 680 ***********************************************************************  00065700
```

```
LOC  OBJECT CODE    ADDR1 ADDR2  STMT   SOURCE STATEMENT                                          F08APR70   9/16/70

                                 682 ***********************************************************************  00065900
                                 683 *                                                                        00066000
                                 684 *        THE DICTIONARY THAT IS TO BE BUILT LOOKS LIKE THE FOLLOWING:    00066100
                                 685 *                                                                        00066200
                                 686 *                     +----------------->+                               00066300
                                 687 *                     A                  |                               00066400
                                 688 *                     |  +<--------------C----------------+              00066500
                                 689 *                     |  |               |               +<-C----------+  00066600
                                 690 *        'THUMBNDX'   |  |  'DICTNARY'   V               V  |          A  00066700
                                 691 *        +________+   |  |  +------+----+------+------+---+--+------+ |  00066800
                                 692 *        |DC A(E) |   |  +->|000000| A  |000000| AAA  |   +  | C    | |  00066900
                                 693 *        +--------+   |     +------+----+--+---+----+-+------+------+ |  00067000
                                 694 *        | 000000 |   +<----+--+   | EEE   | 000000 | ABCDEFGH     | |  00067100
                                 695 *        +--------+         +------+----+--+---+----+---+----------+ |  00067200
                                 696 *        |DC A(EEE)      +<-+--+   | E  | 00000C00000000000000000000 | |  00067300
                                 697 *        +--------+      |  +------+----+  ( UNUSED CORE STORAGE )  | |  00067400
                                 698 *        ))))))))))      |  | 000000000000000000000000000000000000 | |  00067500
                                 699 *        ((((((((((      |  | 000000000000000000000000000000000000 | |  00067600
                                 700 *        +--------+      |  | 000000000000000000000000000000000000 | |  00067700
                                 701 *        |A(ABCDEFGH)    |  | 00C000000000000000000C000000000000000 | |  00067800
                                 702 *        +--------+      |  +-------------------------------------+ |  00067900
                                 703 *                        V                                          |  00068000
                                 704 *        'NEXTBYTE'      +-------------------------------------------->+  00068100
                                 705 *        +--------+                                                     00068200
                                 706 *        |  --->  |   ADDRESS OF FIRST UNUSED BYTE IN 'DICTNARY'.        00068300
                                 707 *        +--------+                                                     00068400
                                 708 *                                                                       00068500
                                 709 *        WHERE EACH ENTRY IN THE DICTIONARY LOOKS LIKE:                 00068600
                                 710 *                                                                       00068700
                                 711 *        +--------+-----------------------------+----------+           00068800
                                 712 *        |CHAIN ->| SYMBOL ( 1 - 8 BYTES LONG )  |   ZEROS  |           00068900
                                 713 *        +--------+-----------------------------+----------+           00069000
                                 714 *        0        3                             4-11       6-13         00069100
                                 715 *                                                                       00069200
                                 716 *        THE ENTRIES ARE CHAINED BY THREE BYTE POINTER FIELDS WHICH     00069300
                                 717 *        POINT TO THE ENTRY IN THE CHAIN THAT WAS IN THE DICTIONARY     00069400
                                 718 *        BEFORE THIS ONE WAS ADDED. (BACK CHAINING) THE POINTER         00069500
                                 719 *        CONTAINS ZEROS IF NO PREVIOUS ENTRY EXISTS IN THE CHAIN.       00069600
                                 720 *        THE ENTRIES ARE CHAINED BY SYMBOL LENGTH, THE FIRST IN         00069700
                                 721 *        EACH CHAIN IS ADDRESSED BY AN ENTRY IN THE APPROPRIATE         00069800
                                 722 *        WORD IN THE "THUMB INDEX" (SIMILAR TO THE THUMB-NOTCHED        00069900
                                 723 *        INDEXING USED IN A REAL DICTIONARY TO REDUCE YOUR SEARCH       00070000
                                 724 *        TIME WHEN TRYING TO LOCATE THE FIRST WORD STARTING WITH        00070100
                                 725 *        A GIVEN LETTER).                                               00070200
                                 726 *                                                                       00070300
                                 727 ***********************************************************************  00070400
```

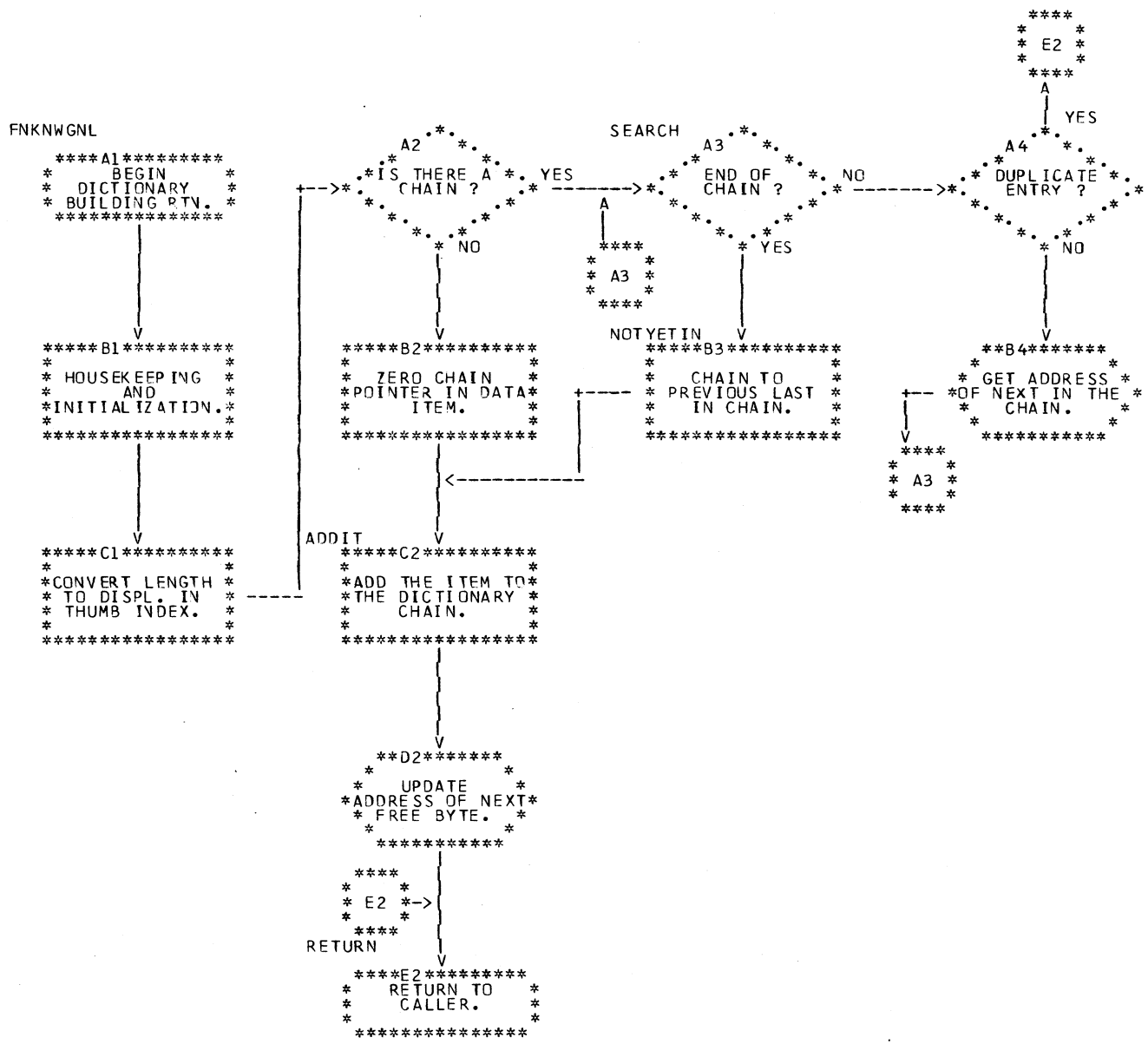
FNKNWGNL
A1
BEGIN DICTIONARY BUILDING RTN.
B1
HOUSEKEEPING AND INITIALIZATION.
C1
CONVERT LENGTH TO DISPL. IN THUMB INDEX.
A2
IS THERE A CHAIN ?
YES
NO
B2
ZERO CHAIN POINTER IN DATA ITEM.
ADDIT
C2
ADD THE ITEM TO THE DICTIONARY CHAIN.
D2
UPDATE ADDRESS OF NEXT FREE BYTE.
E2
RETURN
E2
RETURN TO CALLER.
SEARCH
A3
END OF CHAIN ?
NO
YES
A3
NOTYETIN
B3
CHAIN TO PREVIOUS LAST IN CHAIN.
A4
DUPLICATE ENTRY ?
YES
NO
B4
GET ADDRESS OF NEXT IN THE CHAIN.
A3
E2

```
LOC   OBJECT CODE    ADDR1 ADDR2  STMT   SOURCE STATEMENT                                          F08APR70   9/16/70

                                  744 ***********************************************************************  00072100
                                  745 *                                                                        00072200
                                  746 *        THIS IS THE ROUTINE THAT DOES THE ACTUAL DICTIONARY BUILDING.   00072300
                                  747 *                                                                        00072400
                                  748 ***********************************************************************  00072500

                                  750 *                                                                        00072700
                                  751 *        FIND THE CORRECT THUMB INDEX ENTRY.                             00072800
                                  752 *                                                                        00072900
000000                            753          USING DCTENTRY,R11                                              00073000
0004F4 900F C58A            00590 754 FNKNWGNL STM   R0,R15,TEMPSAVE     SAVE THE CALLER'S REGISTERS.          00073100
0004F8 1831                       755          LR    R3,R1               SAVE FIELD LENGTH.                    00073200
0004FA 0630                       756          BCTR  R3,0                -1                                    00073300
0004FC 8930 0002            00002 757          SLL   R3,2                * 4                                   00073400
000500 41F3 C566            0056C 758          LA    R15,THUMBNDX(R3)    ADDR OF INDEX ENTRY.                  00073500
000504 8830 0002            00002 759          SRL   R3,2                RETURN LENGTH TO NORMAL.              00073600
000508 58BF 0000            00000 760          L     R11,0(R15)          ADDRESS OF CHAIN.                     00073700
00050C 12BB                       761          LTR   R11,R11             = 0 ?                                 00073800
00050E 4770 C52E            00534 762          BNZ   SEARCH              NO, GO TEST FOR DUPLICATE SYMBOL.     00073900
000512 58B0 C5CA            005D0 763          L     R11,NEXTBYTE        YES, ADD THIS ONE                     00074000
000516 D702 B000 B000 00000 00000 764          XC    BACKCHN,BACKCHN     ZERO CHAIN POINTER.                   00074100
                                  765 *                                                                        00074200
                                  766 *        ADD TO THE DICTIONARY.                                          00074300
                                  767 *                                                                        00074400
00051C D202 F001 C5CB 00001 00501 768 ADDIT    MVC   1(3,R15),NEXTBYTE+1 ADD CHAIN POINTER TO THUMB INDEX.    00074500
000522 4430 C55E            00564 769          EX    R3,ENTER            MOVE THE DATA TO THE DICTIONARY.      00074600
000526 41BB 3006            00006 770          LA    R11,6(R11,R3)       ADD LENGTH OF DATA & ATTRIBUTES TO    00074700
00052A 50B0 C5CA            005D0 771          ST    R11,NEXTBYTE        ADDR. OF NEXT FREE BYTE.              00074800
00052E 980F C58A            00590 772 RETURN   LM    R0,R15,TEMPSAVE                                           00074900
000532 07FE                       773          BR    R14                                                       00075000
                                  774 *                                                                        00075100
                                  775 *        SEARCH FOR A DUPLICATE SYMBOL.                                  00075200
                                  776 *                                                                        00075300
000534 12BB                       777 SEARCH   LTR   R11,R11             END OF CHAIN ?                        00075400
000536 4780 C54A            00550 778          BZ    NOTYETIN            YES, THIS IS TO BE ADDED.             00075500
00053A 4430 C558            0055E 779          EX    R3,COMPARE          NO, CONTINUE DUPLICATE SEARCH.        00075600
00053E 4780 C528            0052E 780          BE    RETURN              DUPLICATE FOUND, STOP.                00075700
000542 D202 C587 B000 0058D 00000 781          MVC   WORD+1(3),BACKCHN   SET UP CHAIN POINTER                  00075800
000548 58B0 C586            0058C 782          L     R11,WORD            FOR LOAD.                             00075900
00054C 47F0 C52E            00534 783          B     SEARCH                                                    00076000


000550 58B0 C5CA            005D0 785 NOTYETIN L     R11,NEXTBYTE        SET UP FOR ADDITION TO CHAIN.         00076200
000554 D202 B000 F001 00000 00001 786          MVC   BACKCHN,1(R15)                                            00076300
00055A 47F0 C516            0051C 787          B     ADDIT                                                     00076400

00055E D500 B003 6000 00003 00000 789 COMPARE  CLC   DICTDATA,0(R6)                                           00076600
000564 D200 B003 6000 00003 00000 790 ENTER    MVC   DICTDATA,0(R6)                                           00076700
00056A 0000
00056C 0000000000000000           791 THUMBNDX DC    8A(0)                                                   00076800
```

```
  LOC  OBJECT CODE    ADDR1 ADDR2  STMT   SOURCE STATEMENT                                    F08APR70   9/16/70

000580 00000000                   793 WORD     DC    F'0'                                                 00077000
000590                            794 TEMPSAVE DS    16F                                                  00077100
000590 000005D4                   795 NEXTBYTE DC    A(DICTNARY)                                          00077200
0005D4 0000000000000000           796 DICTNARY DC    200X'0'                                              00077300


                                  798 ***********************************************************************00077500
                                  799 *                                                                    00077600
                                  800 *        ANSWER THESE QUESTIONS ABOUT THE DICTIONARY AND THE ROUTINE  00077700
                                  801 *        THAT BUILT IT.                                              00077800
                                  802 *                                                                    00077900
                                  803 *        1. WHAT WILL THE PROGRAM DO WITH A DUPLICATE SYMBOL, IF IT  00078000
                                  804 *           FINDS ONE ?                                              00078100
                                  805 *                                                                    00078200
                                  806 *        2. WHAT FACTOR DOES THE PROGRAM USE TO DETERMINE INTO WHICH 00078300
                                  807 *           CHAIN A SYMBOL IS TO BE ENTERED ?                        00078400
                                  808 *                                                                    00078500
                                  809 *        3. WHICH INSTRUCTION(S) ARE EXECUTED ONLY WHEN THERE IS NO  00078600
                                  810 *           CHAIN ?                                                  00078700
                                  811 *                                                                    00078800
                                  812 *        4. WHICH INSTRUCTION(S) DETERMINE(S) THE END OF A CHAIN ?   00078900
                                  813 *                                                                    00079000
                                  814 *        5. USING THE DUMP ON THE FOLLOWING PAGE, ANSWER THESE:      00079100
                                  815 *                                                                    00079200
                                  816 *           A. WHAT IS THE ADDRESS OF THE FIRST FREE BYTE IN THE     00079300
                                  817 *              DICTIONARY ?                                          00079400
                                  818 *           B. HOW MANY CHAINS ARE THERE IN THE DUMP ?               00079500
                                  819 *           C. WHICH SYMBOL IS FIRST IN THE 3-BYTE CHAIN ?           00079600
                                  820 *           D. WHICH SYMBOL IS LAST IN THE 3-BYTE CHAIN ?            00079700
                                  821 *                                                                    00079800
                                  822 ***********************************************************************00079900


00069C 001E                       824 STRINGND DC    H'30'      TAKE A DUMP TO SEE THE DICTIONARY...      00080100
00069E 58DD 0004            00004 825          L     R13,4(R13)                                           00080200
0006A2 98EC D00C            0000C 826          LM    R14,R12,12(R13)                                      00080300
0006A6 07FE                       827          BR    R14                                                  00080400
0006A8                            828 SAVEAREA DS    18F                                                  00080500
000000                            829 ON       EQU   X'00'                                                00080600
0000FF                            830 ALL      EQU   X'FF'                                                00080700


000000                            832 DCTENTRY DSECT                                                      00080900
000000                            833 BACKCHN  DS    AL3                                                  00081000
000003                            834 DICTDATA DS    C                                                    00081100
```

```
F.P. REGS.  00.06DCC1 C0C1C529   80.C6D476 00070FA8   40.06DBA6 0006D0E8   00.01ADA0 00000000

REGS 0-7     FFFFFF2E 00000007 00000004 0002A410    00000006 0002A428 0002A749 0002A546
REGS 8-15    0002A54A 00000000 0001DBC8 00000000    6F02A266 0002A908 AF02A702 0002AFFC

000000    00000000 00000000 00000000 00000000    0002A260 00000000 FF040080 A00CA93C  *................................*
000020    FF040003 50004A4E FFC50001 7F02A8FE    0000FF00 00000000 FF050230 8007E0BA  *.........E......................*
000040    00001360 08000000 00001358 00005920    02C040A4 0000996C 00040000 00007498  *................. .............*
000060    0C040000 00007BC8 00040000 00007588    00000000 00012D10 00040000 0C00751A  *.......H........................*

02A260    90ECD000 C5C041F0 C6A250FD 000850DF    000418DF D703D0C8 D0C858F0 C022D201  *.......OF...........P......O..K.*
02A280    F000C026 47F0C04C 0002AC16 07FE0022    E3C8C9E2 40C9D540 C1D540E4 D5D2D5D6  *O....O..........THIS IN AN UNKNO*
02A2A0    E6D540D3 C5D5C7E3 C840D4C5 E2E2C1C7    C54B4130 C0284843 00004153 00024160  *WN LENGTH MESSAGE...............*
02A2C0    C0781244 478C0078 D2006C00 50004155    00014166 00014640 C06247F0 C0A0E3C8  *........K............... ...O..TH*
02A2E0    C9E240C9 D540C1D5 40E4D5D2 D5D6E6D5    40D3C5D5 C7E3C840 D4C5E2E2 C1C7C54B  *IS IN AN UNKNOWN LENGTH MESSAGE.*
02A300    40404040 40404843 0C000640 4240C0AB    D221C078 30024843 00000640 4440C0BE  *       ..... . ..K........... . ..*
02A320    47F0C0C4 D200C078 300247F0 C0CA0017    9180C36D 4710C0DC 9240C2EA D281C2EB  *.0.DK......0......C...... B.K.B.*
02A340    C2EA947F C36D4110 C29658F0 C6EA05EF    58F0C6EE 9500F003 477C046E 4180C29A  *B...C...B..OF....OF...O...D...B.*
02A360    416C0001 4170C2E0 8686C290 95408000    478C0102 1B22DD07 8000C36E 47F2C11A  *......B...B.. ....A.......C..2A.*
02A380    47F0C290 47F0C12A 47F0C290 47F0C290    1B184780 C2900610 4410C14A 41818000  *.0B..0A..0B..0B.....B.....A.....*
02A3A0    8686C290 95408000 4780C13A 47F0C150    D200C2EA 80001B22 DD068000 C36E47F2  *..B.. ....A..0A.K.B.........C..2*
02A3C0    C15C47F0 C29047F0 C29047F0 C2904140    00064150 C1C24130 C1981B18 4780C290  *A..0B..0B..0B.. ....AB..A.....B.*
02A3E0    412C01C8 06104410 C1920782 41220004    8734C180 47F0C290 D5003000 8000D5C1  *..AH....A.........A..0B.N.....NA*
02A400    D4C54040 C1C4C4D9 4040D7C8 D6D5C540    C4C5D7C5 D5C4C3C9 E3E84040 E2E3C1E3  *ME  ADDR  PHUNE DEPENDCITY  STAT*
02A420    C540E9C9 D7404040 E2E3C1E3 E4E247F0    C28E47F0 C28E47F0 C28E47F0 C1E847F0  *E ZIP   STATUS.0B..0B..0B..CAY.0*
02A440    C28E47F0 C28E47F0 C28E47F0 C28E4181    80C241F0 C309954D 80004780 C2529620  *B..0B..0B..0B......0C.......B...*
02A460    C36D1B22 DD0A8000 C36E4780 C29047F2    C20C47F0 C29047F0 C29C47F0 C22047F0  *C.......C...B..2B..0B..0B..0B..0*
02A480    C2909640 C36D1B18 06104410 C24C41FF    000A4181 80029140 C36D4780 C1FC9200  *B.. C.......B........... C...A...*
02A4A0    C3CB9720 C36D4780 C262949F C36D47F0    C25ED200 F0008000 9210C3CB 418800C1  *C...C...B...C..0B.K.0.....C.....*
02A4C0    47F0C1FC 41818001 95408000 4780C0C8    956B8000 477CC290 41880001 95408000  *.0A...... .....H......B...... ..*
02A4E0    4770C150 95407001 4780C290 9680C36D    47F0C0C8 000B0014 47F0C46E 0002A500  *..A.. ....B...C..0.H.....0D.....*
02A500    40C1C4C4 40C4C5D7 C5D5C47E 4DC5E9C5    D2C9C1D3 6BC1C2C1 C7C1C9D3 6BC5E9D4  * ADD DEPEND..EZEKIAL.ABAGAIL.EZM*
02A520    C5D9C5D3 C4C16BC8 C5D7E9C5 C2C1C86B    C8C5D9D4 C9D6D5C5 6BC3C8C1 E4D5C3C5  *ERELDA.HEPZEBAH.HERMIONE.CHAUNCE*
02A540    E85D4040 40404040 40404040 40404040    40404040 40404040 40404040 40404040  *Y.                               *
02A560    40404040 40404040 40404040 40404040    40404040 40404040 40404040 40404040  *                                 *
02A580    40404040 40404040 40404040 40404040    40404040 40404040 40404040 40404040  *                                 *
02A5A0    40404040 40404040 40404040 40404040    40404040 40404040 40404040 40404040  *                                 *
02A5C0    40404040 40404040 40404040 40404040    40404040 00000000 00000000 00000000  *                             .....*
02A5E0    00000000 00000000 00000000 00000000    00000000 00000000 00000000 00000000  *................................*
02A600    00000000 00000000 00000000 00000000    00000000 04000000 00000000 00000000  *................................*
02A620    00000000 00000000 00000000 00000000    00000000 00000000 00000000 00000008  *................................*
02A640    00000000 00000000 00000000 00000000    00000000 00000000 00000000 00000000  *................................*
02A660    00000000 00000000 00000000 00000000    00000000 00000000 00000000 00000000  *................................*
02A680    00000000 00000000 00000000 00000000    00000000 00000000 00000000 00000000  *................................*
02A6A0    00000000 00000000 00000000 00000000    00000000 00000000 00000000 00000000  *................................*
02A6C0    00000000 00000000 00000000 00000000    00000000 9200C3CB 9200C3EC 9400C36D  *.......................C...C...C.*
02A6E0    416C04AC 1B22DD08 6000C36E 47F2C48A    47F0C4EC 9640C36D 1B164780 C49C45E0  *..D.......C..2D..0D.. C.....D...*
02A700    C4EE9140 C36D4710 C6964161 600147F0    C47EE3C8 C5E2C56B C1D9C56B E3C8C56B  *D.. C...F......0D.THESE.ARE.THE.*
02A720    C6C9C5D3 C4E26BE4 E2C5C46B C2E86BE3    C8C56BC4 C9C3E3C9 D6D56C6B C1D9E86B  *FIELDS.USED.BY.THE.DICTION..ARY.*
02A740    C2E4C9D3 C4C9D5C7 6BD7D9D6 C7D9C1D4    40000012 900FC58A 18310630 89300002  *BUILDING.PROGRAM .....E........*
02A760    41F3C566 88300002 58BF0000 12BB4770    C52E58B0 C5CAD702 B000B000 D202F001  *.3E.............E...E.P.....K.C.*
02A780    C5CB4430 C55E41BB 30065CB0 C5CA980F    C58A07FE 12BB4780 C54A4430 C5584780  *E...E.......E...E.......E...E...*
02A7A0    C528D202 C587B000 58B0C586 47F0C52E    58B0C5CA D202B000 F00147F0 C516D500  *E.K.E.....E..0E...E.K...0..0E.N.*
02A7C0    B0036000 D200B003 60000000 00000000    0002A862 0002A876 0002A859 0002A834  *....K...........................*
02A7E0    0002A84E 0002A88B 0002A87E 00000000    FFFFFF2E 00000007 00000004 0002A410  *................................*
02A800    00000006 0002A428 0002A749 0002A546    0002A54A 00000000 0001DB08 00000000  *................................*
02A820    6F02A266 0002A908 AF02A702 0002AFFC    0002A897 000000E3 C8C5E2C5 00000000  *.......................THESE....*
02A840    00C1D9C5 000002A8 3EE3C8C5 00000000    00C6C9C5 D3C4E200 00000000 E4E2C5C4  *.ARE.....THE.....FIELDS.....USED*
02A860    00000000 00C2E800 00000000 C4C9C3E3    C9D6D560 000002A8 46C1D9E8 000002A8  *.....BY.....DICTION......ARY....*
02A880    69C2E4C9 D3C4C9D5 C7000000 0000D7D9    D6C7D9C1 D4000000 00000000 00000000  *.BUILDING.....PROGRAM..........*
```

```
02A8A0    00000000 00000000 00000000 00000000    00000000 00000000 00000000 00000000  *................................*
02A8C0    00000000 00000000 00000000 00000000    00000000 00000000 00000000 00000000  *................................*
02A8E0    00000000 00000000 00000000 00000000    00000000 00000000 00000000 001E58DD  *................................*
02A900    000498EC D00C07FE 960F100F 00036768    0002AF54 4F02A350 0002AEF8 FFFFFF2E  *..........................8....*
02A920    0002A4FC 00000010 0002A410 00000006    0002A428 00000001 0002A546 0002A54A  *................................*
02A940    00000000 0001DBC8 00000000 6F02A266    0002AEF8 0002AFFC 90ECD00C 05C004F0  *...................8...........0*

02AF00    C05650FD 00085CDF 000418DF D703D008    D0085851 00009110 C0CE471C C02C070C  *............P...................*
02AF20    4510002A 8002AF9C 0A134110 C09E1805    58F01030 05EF58DD 000498EC D00C07FE  *..................0..............*
02AF40    4510004A 8002AF9C 0A149201 C10147F0    C038430A 000158E0 0002A908 00000000  *.............A..0................*
02AF60    959891FE A0014750 7F02AF36 1207D938    000365F0 0002AF9C 0002AF9C 000365F0  *...............R....0...........0*
02AF80    00036748 00036748 00000050 00000050    0007F020 4F07D9F0 0007F020 00000000  *..................0...R0..0......*
02AFA0    2D000000 003E0005 00008652 0028007E    000366A0 00004000 00000001 0402AF40  *...................... ........ *
02AFC0    00000000 C9D5D7E4 E3404040 02005000    00000001 08000001 00000000 00000000  *....INPUT   ....................*
02AFE0    00000000 00000000 000000C1 00000050    00000001 00000000 00000000 00000001  *................................*
```



**********

```
LOC  OBJECT CODE    ADDR1 ADDR2  STMT   SOURCE STATEMENT                                          F08APR70   9/16/70

                                 836 ************************************************************************* 00081300
                                 837 *                                                                         00081400
                                 838 *        ANSWERS TO THE DICTIONARY BUILDING ROUTINE.                      00081500
                                 839 *                                                                         00081600
                                 840 *        1. IT WILL IGNORE ANY DUPLICATE.                                 00081700
                                 841 *                                                                         00081800
                                 842 *        2. THE CHAINS ARE SEPARATED BY SYMBOL LENGTH.                    00081900
                                 843 *                                                                         00082000
                                 844 *        3. STATEMENTS #767 AND 768:                                      00082100
                                 845 *           L     R11,NEXTBYTE       YES, ADD THIS ONE                    00082200
                                 846 *           XC    BACKCHN,BACKCHN    ZERO CHAIN POINTER.                  00082300
                                 847 *                                                                         00082400
                                 848 *        4. STATEMENTS #781 AND 782:                                      00082500
                                 849 *           SEARCH   LTR   R11,R11      END OF CHAIN ?                     00082600
                                 850 *                    BZ    NOTYETIN     YES, THIS IS TO BE ADDED.          00082700
                                 851 *                                                                         00082800
                                 852 *        5. A) X'      ' OR 'CARDSCAN'+X'0637' OR 'DICTNARY'+X'63'.       00082900
                                 853 *           B) THERE ARE SEVEN CHAINS.                                    00083000
                                 854 *           C) 'ARY' IS THE FIRST SYMBOL IN THE 3-BYTE CHAIN.             00083100
                                 855 *           D) 'ARE' IS THE LAST SYMBOL IN THE 3-BYTE CHAIN.              00083200
                                 856 *                                                                         00083300
                                 857 ******** WHEN YOU HAVE FINISHED THESE QUESTIONS, DISPLAY THE YELLOW      00083400
                                 858 *        SIDE OF YOUR "ANSWER CUE".                                       00083500
                                 859 *                                                                         00083600
                                 860 *********************************************************************** 00083700
                                 861          END                                                              00083800
C006F0 00000000                  862               =V(READ)
0006F4 00000000                  863               =V(EOF)
```

9/16/70

| POS.ID | REL.ID | FLAGS | ADDRESS |
|---|---|---|---|
| 01 | 01 | 0C | 00029C |
| 01 | 01 | 0C | 0005D0 |
| 01 | 02 | 1C | 000028 |
| 01 | 03 | 1C | 0006F0 |
| 01 | 04 | 1C | 0006F4 |

9/16/70

| SYMBOL | LEN | VALUE | DEFN | REFERENCES | | | | | | | | | |
|---|---|---|---|---|---|---|---|---|---|---|---|---|---|
| A | 00034 | 000030 | 00060 | 0059 | | | | | | | | | |
| ADDIT | 00006 | 00051C | 00768 | 0787 | | | | | | | | | |
| ADDRESS | 00001 | 000294 | 00518 | 0418 | | | | | | | | | |
| ALL | 00001 | 0000FF | 00830 | 0629 | | | | | | | | | |
| AROUND | 00001 | 00007E | 00106 | 0099 | | | | | | | | | |
| B | 00001 | 000052 | 00061 | 0059 | | | | | | | | | |
| BACKCHN | 00003 | 000000 | 00833 | 0764 | 0764 | 0781 | 0786 | | | | | | |
| BR14 | 00002 | 00002C | 00033 | 0030 | | | | | | | | | |
| BUMPIT | 00004 | 0004A2 | 00639 | 0637 | | | | | | | | | |
| CARDAREA | 00001 | 0002A0 | 00535 | 0343 | 0345 | 0534 | | | | | | | |
| CARDPTR | 00004 | 00029C | 00534 | 0333 | | | | | | | | | |
| CARDSCAN | 00001 | 000000 | 00001 | | | | | | | | | | |
| CHKEYWDS | 00002 | 000156 | 00379 | 0370 | 0477 | | | | | | | | |
| CITY | 00001 | 000294 | 00519 | 0421 | | | | | | | | | |
| COMPARE | 00006 | 00055E | 00789 | 0779 | | | | | | | | | |
| CONTINER | 00001 | 000296 | 00525 | 0479 | | | | | | | | | |
| CONTINUE | 00001 | 000080 | 00542 | 0328 | 0332 | 0480 | | | | | | | |
| DCTENTRY | 00001 | 000000 | 00832 | 0753 | | | | | | | | | |
| DELIMERR | 00001 | 000296 | 00526 | 0352 | 0354 | 0355 | 0382 | 0383 | 0384 | 0440 | 0442 | 0443 | 0445 | 0474 |
| DEPENDNT | 00001 | 0001EE | 00431 | 0420 | | | | | | | | | |
| DEPNDMVC | 00006 | 000252 | 00461 | 0450 | | | | | | | | | |
| DEPNDSCN | 00001 | 000202 | 00437 | 0454 | 0465 | | | | | | | | |
| DEPNDSC2 | 00001 | 000226 | 00447 | 0444 | | | | | | | | | |
| DEPNDSV | 00100 | 00030F | 00538 | 0331 | 0433 | | | | | | | | |
| DICTDATA | 00001 | 000003 | 00834 | 0789 | 0790 | | | | | | | | |
| DICTNARY | 00001 | 0005D4 | 00796 | 0795 | | | | | | | | | |
| ENDOFILE | 00004 | 000474 | 00627 | 0338 | 0532 | | | | | | | | |
| ENTER | 00006 | 000564 | 00790 | 0769 | | | | | | | | | |
| FINDKYWD | 00002 | 000130 | 00362 | 0353 | | | | | | | | | |
| FLAGS | 00001 | 000373 | 00539 | 0328 | 0436 | 0446 | 0453 | 0456 | 0480 | 0541 | 0639 | | |
| FNKNWGNL | 00004 | 0004F4 | 00754 | 0638 | | | | | | | | | |
| GETACARD | 00002 | 0000CE | 00327 | 0206 | 0472 | 0481 | | | | | | | |
| GOONBY | 00004 | 0000CA | 00206 | 0194 | | | | | | | | | |
| INVALIDK | 00001 | 000296 | 00530 | 0396 | | | | | | | | | |
| KEYDCOMP | 00004 | 000186 | 00392 | 0395 | | | | | | | | | |
| KEYWDCLC | 00006 | 000198 | 00398 | 0392 | | | | | | | | | |
| KEYWDEND | 00001 | 0001C8 | 00410 | 0386 | | | | | | | | | |
| KEYWDTB | 00006 | 000198 | 00403 | 0387 | | | | | | | | | |
| KWDBRTAB | 00002 | 0001CE | 00416 | 0390 | | | | | | | | | |
| LASTONE | 00001 | 000040 | 00543 | 0446 | 0453 | 0458 | 0635 | 0639 | | | | | |
| LKWDTEST | 00004 | 000264 | 00470 | 0459 | | | | | | | | | |
| LKWDTST1 | 00004 | 000268 | 00471 | 0457 | | | | | | | | | |
| LOOP | 00001 | 000068 | 00100 | 0104 | | | | | | | | | |
| LOOPSAMP | 00004 | 000052 | 00084 | 0031 | | | | | | | | | |
| MESSAGE | 00001 | 00007E | 00107 | 0087 | 0138 | 0197 | | | | | | | |
| MODIFY | 00004 | 0000A6 | 00128 | 0105 | | | | | | | | | |
| MOVE | 00006 | 000080 | 00138 | 0136 | | | | | | | | | |
| MOVEDATA | 00006 | 000004 | 00197 | 0191 | | | | | | | | | |
| NAME | 00001 | 000294 | 00517 | 0417 | | | | | | | | | |
| NAMESAVE | 00025 | 0002F6 | 00537 | 0331 | | | | | | | | | |
| NEXTBYTE | 00004 | 0005D0 | 00795 | 0763 | 0768 | 0771 | 0785 | | | | | | |
| NOKEYWD | 00001 | 000296 | 00529 | 0367 | 0389 | | | | | | | | |
| NORESET | 00004 | 0000E2 | 00332 | 0329 | | | | | | | | | |
| NOTYETIN | 00004 | 000550 | 00785 | 0778 | | | | | | | | | |
| NOVERB | 00001 | 000296 | 00527 | 0346 | | | | | | | | | |

```
                                         CROSS-REFERENCE                                                      PAGE    2

SYMBOL     LEN   VALUE  DEFN      REFERENCES                                                                   9/16/70

OFF       00001 0000FF 00540    0332   0458   0629
ON        00001 000000 00829    0635
ONLYONE   00001 000020 00544    0436   0456   0458
PHONE     00002 000294 00523    0419
RETURN    00004 00052E 00772    0780
R0        00001 000000 00003    0754   0772
R1        00001 000001 00004    0333   0362   0364   0365   0366   0388   0391   0392   0432   0448   0449   0450   0452   0470   0636
                                0641   0755
R10       00001 00000A 00013
R11       00001 00000B 00014    0753   0760   0761   0761   0763   0770   0770   0771   0777   0777   0782   0785
R12       00001 00000C 00015    0019   0020   0021   0826
R13       00001 00000D 00016    0019   0023   0024   0025   0026   0026   0825   0825   0826
R14       00001 00000E 00017    0019   0033   0335   0638   0773   0826   0827
R15       00001 00000F 00018    0022   0023   0024   0025   0029   0030   0334   0335   0336   0337   0433   0451   0451   0461   0754
                                0758   0760   0768   0772   0786
R2        00001 000002 00005    0349   0349   0351   0379   0379   0381   0390   0393   0394   0394   0438   0438   0441   0631   0631
                                0633
R3        00001 000003 00006    0084   0085   0086   0128   0138   0189   0197   0387   0395   0398   0755   0756   0757   0758   0759
                                0769   0770   0779
R4        00001 000004 00007    0085   0098   0098   0104   0128   0135   0136   0189   0190   0191   0385   0395
R5        00001 000005 00008    0086   0101   0102   0102   0386
R6        00001 000006 00009    0087   0101   0103   0103   0344   0346   0367   0630   0632   0636   0641   0641   0789   0790
R7        00001 000007 00010    0345   0478
R8        00001 000008 00011    0343   0346   0347   0350   0362   0366   0366   0367   0368   0372   0380   0388   0398   0432   0432
                                0434   0439   0448   0452   0452   0461   0464   0464   0470   0470   0471   0473   0475   0475   0476
R9        00001 000009 00012
SAVEAREA  00004 0006A8 00828    0022
SCANLOOP  00002 000484 00631    0642
SEARCH    00002 000534 00777    0762   0783
STATE     00001 000294 00520    0422
STATUS    00001 000294 00522    0424
STRINGND  00002 00069C 00824    0640
STRINGS   00063 0004B2 00644    0630
SUBDEPND  00004 000258 00463    0435
TEMPSAVE  00004 000590 00794    0754   0772
THUMBNDX  00004 00056C 00791    0758
TOOLONG   00002 0004F2 00645    0634
TRTABLE   00001 000374 00545    0350   0380   0439   0455   0463   0546   0548   0550   0552   0627   0628   0632
TURN      00001 000373 00541    0332   0458   0629   0635
VARIABLE  00002 00002E 00059    0084
VCONPCHK  00004 000028 00032    0029
VERBERR   00001 000296 00528    0363
VERBMVC   00006 000150 00372    0365
VERBSAVE  00006 0002F0 00536    0330   0331   0331   0331   0372
WORD      00004 00058C 00793    0781   0782
ZIPCODE   00001 000294 00521    0423


NO STATEMENTS FLAGGED IN THIS ASSEMBLY
*STATISTICS*     SOURCE RECORDS (SYSIN) =    838       SOURCE RECORDS (SYSLIB) =     25
*OPTIONS IN EFFECT*   LIST, NODECK, LOAD, NORENT, XREF, NOTEST, ALGN, OS, LINECNT =  55
  993 PRINTED LINES
```

```
F44-LEVEL LINKAGE EDITOR OPTIONS SPECIFIED MAP,LET,LIST,NCAL
          VARIABLE OPTIONS USED -  SIZE=(45056,6144)-          DEFAULT OPTION(S) USED
IEW0000             ENTRY UTILITY


                                                MODULE MAP


  CONTROL SECTION                        ENTRY

    NAME     ORIGIN  LENGTH                 NAME   LOCATION     NAME   LOCATION     NAME   LOCATION     NAME   LOCATION

  CARDSCAN      00     6F8
  UTILITY      6F8     5A0
                                         PRINT        75A    PCHKRETN     9B6
  READ         C98     108
                                         EOF          D9C

 ENTRY ADDRESS       6F8
 TOTAL LENGTH        DA0

****GO        DOES NOT EXIST BUT HAS BEEN ADDED TO DATA SET
```

```
VV        VV   AAAAAAAAAA   RRRRRRRRRRR   YY        YY
VV        VV  AAAAAAAAAAAA  RRRRRRRRRRRR  YY        YY
VV        VV  AA        AA  RR        RR   YY      YY
VV        VV  AA        AA  RR        RR    YY    YY
VV        VV  AA        AA  RR        RR     YY  YY
VV        VV  AAAAAAAAAAAA  RRRRRRRRRRRR      YYYY
VV        VV  AAAAAAAAAAAA  RRRRRRRRRRRR       YY
 VV      VV   AA        AA  RR    RR           YY
  VV    VV    AA        AA  RR     RR          YY
   VV  VV     AA        AA  RR      RR         YY
    VVVV      AA        AA  RR       RR        YY
     VV       AA        AA  RR        RR       YY
```

```
TTTTTTTTTTTT   AAAAAAAAAA        11
TTTTTTTTTTTT  AAAAAAAAAAAA      111
     TT       AA        AA     1111
     TT       AA        AA       11
     TT       AA        AA       11
     TT       AAAAAAAAAAAA       11
     TT       AAAAAAAAAAAA       11
     TT       AA        AA       11
     TT       AA        AA       11
     TT       AA        AA       11
     TT       AA        AA   1111111111
     TT       AA        AA   1111111111
```

```
 9999999999
999999999999
99        99
99        99
99        99
999999999999
999999999999
          99
          99
99        99
999999999999
 9999999999
```



**********

```
SYMBOL   .TYPE ID  ADDR   LENGTH LD ID

SYMBOLTB  SD  01 000000 000300
```

```
 LOC  OBJECT CODE    ADDR1 ADDR2  STMT   SOURCE STATEMENT                                          F08APR70   9/16/70

000000                                2 SYMBOLTB CSECT                                                        00000200
                                      3          COPY  MHMBEGIN                                               00000300
000000                                4 R0       EQU   0                                                      00000700
000001                                5 R1       EQU   1                                                      00000800
000002                                6 R2       EQU   2                                                      00000900
000003                                7 R3       EQU   3                                                      00001000
000004                                8 R4       EQU   4                                                      00001100
000005                                9 R5       EQU   5                                                      00001200
000006                               10 R6       EQU   6                                                      00001300
000007                               11 R7       EQU   7                                                      00001400
000008                               12 R8       EQU   8                                                      00001500
000009                               13 R9       EQU   9                                                      00001600
00000A                               14 R10      EQU   10                                                     00001700
00000B                               15 R11      EQU   11                                                     00001800
00000C                               16 R12      EQU   12                                                     00001900
00000D                               17 R13      EQU   13                                                     00002000
00000E                               18 R14      EQU   14                                                     00002100
00000F                               19 R15      EQU   15                                                     00002200
000000 90EC D00C            0000C    20          STM   R14,R12,12(R13)     SAVE THE CALLER'S REGISTERS        00002400
000004 05C0                          21          BALR  R12,0               ESTABLISH PROGRAM BASE             00002500
000006                               22          USING *,R12               LET THE ASSEMBLER KNOW.            00002600
000006 41F0 C2B2            002B8    23          LA    R15,SAVEAREA        ADDRESS OF MY SAVE AREA            00002700
00000A 50FD 0008            00008    24          ST    R15,8(R13)          BACKWARD CHAIN                     00002800
00000E 50DF 0004            00004    25          ST    R13,4(R15)          FORWARD CHAIN                      00002900
000012 18DF                          26          LR    R13,R15             ESTABLISH MY SAVE AREA             00003000
000014 D703 D008 D008 00008 00008    27          XC    8(4,R13),8(R13)     TERMINATE THE FORWARD CHAIN        00003100
                                     28 *        END OF STANDARD ENTRY LINKAGE CONVENTIONS.                   00003200
                                     29 ************************************************************************ 00000400
                                     30 *                                                                      00000500
                                     31 *        THIS ROUTINE BUILDS A SYMBOL TABLE CONTAINING CHAINS OF       00000600
                                     32 *        SYMBOLS (CHAINS BASED ON SYMBOL LENGTH, WHICH MAY BE FROM     00000700
                                     33 *        ONE TO EIGHT CHARACTERS. THE CHAINS ARE POINTED TO BY         00000800
                                     34 *        AN INDEX TABLE (CALLED A 'THUMB INDEX'), WHICH CONTAINS       00000900
                                     35 *        ADDRESSES POINTING TO THE BEGINNING OF THEIR RESPECTIVE       00001000
                                     36 *        CHAINS. THE PROGRAM WILL CHECK FOR DUPLICATES, AND IF         00001100
                                     37 *        ONE IS FOUND, IT RETURNS A CODE OF 4, IF NOT, THE NEW         00001200
                                     38 *        SYMBOL IS ADDED TO THE END OF THE CHAIN, AND A CODE OF        00001300
                                     39 *        0 IS RETURNED.                                                00001400
                                     40 *                                                                      00001500
                                     41 *        THE PROGRAM SEEMS TO BE OUT OF ADJUSTMENT TODAY, AS IT        00001600
                                     42 *        IS NOT WORKING TOO WELL. FIND THE ERROR AND THE CODE          00001700
                                     43 *        THAT CAUSED IT.                                               00001800
                                     44 *                                                                      00001900
                                     45 ************************************************************************ 00002000
```

```
 LOC  OBJECT CODE    ADDR1 ADDR2  STMT   SOURCE STATEMENT                                        F08APR70   9/16/70

00001A 47F0 C0AE            00084    47          B     TESTCASE           BRANCH TO THE TESTING CODE.          00002200
                                     48 ********************************************************************** 00002300
                                     49 *                                                                      00002400
                                     50 *        ON ENTRY, REGISTER 1 POINTS TO THE LENGTH OF THE SYMBOL       00002500
                                     51 *        TO BE INSERTED (HALF-WORD), WHICH IS FOLLOWED BY THE          00002600
                                     52 *        SYMBOL ITSELF.                                                00002700
                                     53 *                                                                      00002800
                                     54 *        +--------+         +------+-----------------------+          00002900
                                     55 *        |    +---+-------->|LENGTH| SYMBOL (1-8 BYTES)     |          00003000
                                     56 *        +--------+         +------+-----------------------+          00003100
                                     57 *        REGISTER 1         0      2                       3-10       00003200
                                     58 *                                                                      00003300
                                     59 *        THE SYMBOL WILL BE ENTERED INTO A TABLE THAT LOOKS LIKE:      00003400
                                     60 *                                                                      00003500
                                     61 *        IN THE TABLE, ' --> X ' MEANS "ADDRESS OF X".                 00003600
                                     62 *                                                                      00003700
                                     63 *        'INDEX'            'DICTNARY'                                 00003800
                                     64 *        +---------+        +---------+----------+-------------+      00003900
                                     65 *        | ----> A |        |A | -> B |AA | -> BB |AAA | -> BBB |      00004000
                                     66 *        +---------+        +---------+----------+-------------+      00004100
                                     67 *        | ---> AA |        |B |000000|BB | -> DD |BBB | -> EEE |      00004200
                                     68 *        +---------+        +---------+----------+-------------+      00004300
                                     69 *        | --> AAA |        |DD |000000|EEE |000000| X          |      00004400
                                     70 *        +---------+        +----------+----------+ A          |      00004500
                                     71 *        | 0000000 |        |                       |          |      00004600
                                     72 *        +---------+        |                       |          |      00004700
                                     73 *        ))))))))))         |                       |          |      00004800
                                     74 *        ((((((((((         | (UNUSED SPACE)        |          |      00004900
                                     75 *        +---------+        |                       |          |      00005000
                                     76 *        | 0000000 |        |                       |          |      00005100
                                     77 *        +---------+        +-----------------------C----------+      00005200
                                     78 *                                                    |                00005300
                                     79 *        'NXAVAIL'  ' --> X ' MEANS "ADDRESS OF X". |                00005400
                                     80 *        +---------+                                | ( ADDRESS OF 1ST 00005500
                                     81 *        |   +-----+------------------------------>+  FREE BYTE IN  00005600
                                     82 *        +---------+                                  'DICTNARY'.)    00005700
                                     83 *                                                                      00005800
                                     84 *        ONCE IN THE DICTIONARY, THE ENTRY LOOKS LIKE:                 00005900
                                     85 *                                                                      00006000
                                     86 *        +----------------+--------------------+------+              00006100
                                     87 *        | SYMBOL (1-8)   | ATTRIBUTES (11)    |CHAIN |              00006200
                                     88 *        +----------------+--------------------+------+              00006300
                                     89 *        0               1-8                  12-19  15-22            00006400
                                     90 *                                                                      00006500
                                     91 ********************************************************************** 00006600
```

```
 LOC  OBJECT CODE    ADDR1 ADDR2  STMT   SOURCE STATEMENT                                          F08APR70   9/16/70

00001E 900F D00C            0000C    93 ENTER    STM   R0,R15,12(R13)      SAVE MAINLINE ROUTINE'S REGISTERS.    00006800
000022 1211                          94          LTR   R1,R1               IF NO SYMBOL GIVEN,                   00006900
000024 4780 C094            0009A    95          BZ    NOENTRY              RETURN.                              00007000
000028 48F1 0000            00000    96          LH    R15,0(R1)           GET LENGTH OF SYMBOL.                 00007100
00002C 12FF                          97          LTR   R15,R15             IF ZERO LENGTH,                       00007200
00002E 4780 C094            0009A    98          BZ    NOENTRY              RETURN.                              00007300
000032 06F0                          99          BCTR  R15,0                ELSE SUBTRACT ONE.                   00007400
000034 18BF                         100          LR    R11,R15              COPY LENGTH FOR EXECUTE.              00007500
000036 89F0 0002            00002   101          SLL   R15,2                *4 FOR DISPLACEMENT IN THUMB INDEX.   00007600
00003A 58EF C162            00168   102          L     R14,INDEX(R15)      GET ADDR. OF CHAIN.                   00007700
00003E 12EE                         103          LTR   R14,R14             IF THE CHAIN EXISTS,                  00007800
000040 4770 C046            0004C   104          BNZ   LOOP                 GO SEARCH FOR DUPLICATE.             00007900
000044 41AF C162            00168   105          LA    R10,INDEX(R15)       OTHERWISE, POINT TO ENTRY IN INDEX.   00008000
000048 47FC C068            0006E   106          B     ENTERC               AND GO ENTER THE DATA                 00008100
00004C 44B0 C0A2            000A8   107 LOOP     EX    R11,COMPARE         TEST FOR DUPLICATE                    00008200
000050 4780 C094            0009A   108          BE    DUPE                 FOUND, EXIT                          00008300
000054 41AB E00B            0000B   109          LA    R10,11(R11,R14)     ADDRESS OF CHAINING POINTER IN CHAIN. 00008400
000058 D202 C0AB A000 000B1 00000   110          MVC   WORD+1(3),0(R10)     ALIGN CHAIN POINTER ON A WORD BDY.   00008500
00005E 5890 C0AA            000B0   111          L     R9,WORD             GET CHAINING ADDRESS                  00008600
000062 1299                         112          LTR   R9,R9               IF END OF CHAIN,                      00008700
000064 4780 C068            0006E   113          BZ    ENTERC               ADD THIS ONE TO THE CHAIN.           00008800
000068 18E9                         114          LR    R14,R9               OTHERWISE REPEAT THE SEARCH.         00008900
00006A 47F0 C046            0004C   115          B     LOOP                                                      00009000
00006E D202 A000 C163 00000 00189   116 ENTERC   MVC   0(3,R10),NXAVAIL+1 SET CHAIN POINTER TO NEXT AVAILABLE   00009100
                                    117 *                                   BYTE IN DICTIONARY.                  00009200
000074 5820 C182            00188   118          L     R2,NXAVAIL                                                00009300
000078 413B 200E            0000E   119          LA    R3,14(R11,R2)                                             00009400
00007C 5030 C182            00188   120          ST    R3,NXAVAIL          UPDATE NEXT FREE BYTE ADDRESS.        00009500
000080 44B0 C09C            000A2   121          EX    R11,MOVE            ADD THE ENTRY TO THE SYMBOL TABLE.    00009600
000084 41BB 000B            0000B   122          LA    R11,11(R11)         ADD LENGTH OF COMMON.                 00009700
000088 4122 B001            00001   123          LA    R2,1(R2,R11)                                              00009800
00008C D702 2000 2000 00000 00000   124          XC    0(3,R2),0(R2)       ZERO NEW CHAIN POINTER.               00009900
000092 1BFF                         125          SR    R15,R15             RETURN CODE TO SHOW SUCCESSFUL OP.    00010000
000094 98DE D00C            0000C   126 EXIT     LM    R0,R14,12(R13)      RESTORE REGISTERS.                    00010100
000098 07FE                         127          BR    R14                 RETURN TO MAINLINE.                   00010200
00009A                              128 NOENTRY  EQU   *                   SET UP ERROR CODE.                    00010300
00009A 41F0 0004            00004   129 DUPE     LA    R15,4               SET UP ERROR CODE.                    00010400
00009E 47F0 C08E            00094   130          B     EXIT                RESTORE REGISTERS AND RETURN.         00010500


0000A2 D200 2000 1002 00000 00002   132 MOVE     MVC   0(0,R2),2(R1)       EXECUTED MVC.                         00010700
0000A8 D500 E000 1002 00000 00002   133 COMPARE  CLC   0(0,R14),2(R1)      EXECUTED CLC.                         00010800
0000AE 0000
0000B0 00000000                     134 WORD     DC    F'0'                BOUNDARY ALIGNMENT BUFFER.            00010900
```

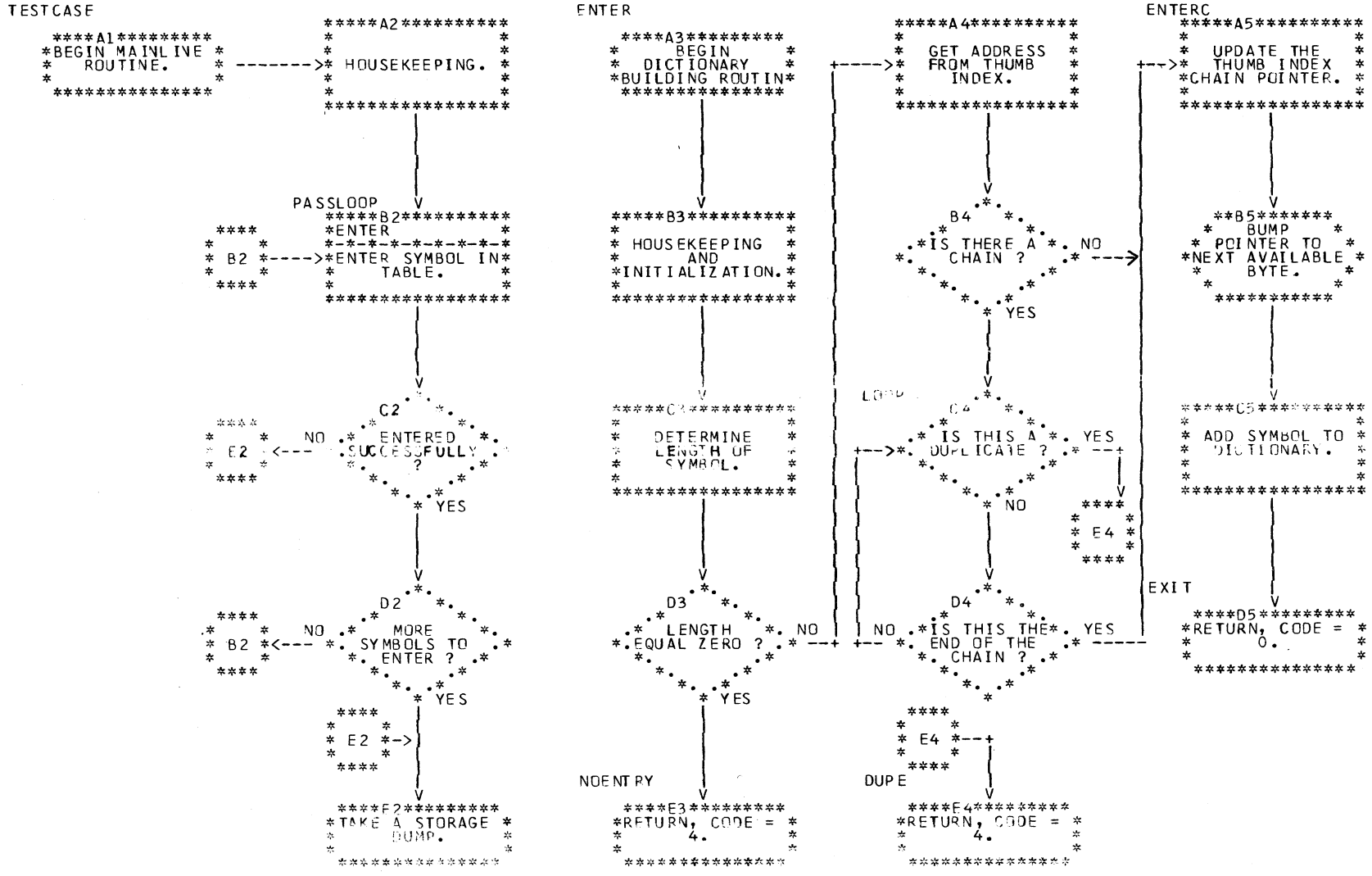
TESTCASE
A1
BEGIN MAINLINE ROUTINE.
A2
HOUSEKEEPING.
PASSLOOP
B2
ENTER
ENTER SYMBOL IN TABLE.
C2
ENTERED SUCCESSFULLY ?
NO
E2
YES
D2
MORE SYMBOLS TO ENTER ?
NO
B2
YES
E2
F2
TAKE A STORAGE DUMP.
ENTER
A3
BEGIN DICTIONARY BUILDING ROUTIN
B3
HOUSEKEEPING AND INITIALIZATION.
C3
DETERMINE LENGTH OF SYMBOL.
D3
LENGTH EQUAL ZERO ?
NO
YES
NOENTRY
E3
RETURN, CODE = 4.
A4
GET ADDRESS FROM THUMB INDEX.
B4
IS THERE A CHAIN ?
NO
YES
LOOP
C4
IS THIS A DUPLICATE ?
YES
NO
E4
D4
IS THIS THE END OF THE CHAIN ?
YES
NO
E4
DUPE
E4
RETURN, CODE = 4.
ENTERC
A5
UPDATE THE THUMB INDEX CHAIN POINTER.
B5
BUMP POINTER TO NEXT AVAILABLE BYTE.
C5
ADD SYMBOL TO DICTIONARY.
EXIT
D5
RETURN, CODE = 0.

```
 LOC  OBJECT CODE    ADDR1 ADDR2  STMT   SOURCE STATEMENT                                    F08APR70   9/16/70

                                  159 ***********************************************************************  00013400
                                  160 *                                                                        00013500
                                  161 *        THIS ROUTINE PASSES SYMBOLS TO THE DICTIONARY BUILDING          00013600
                                  162 *        ROUTINE.                                                        00013700
                                  163 *                                                                        00013800
                                  164 ***********************************************************************  00013900
0000B4                            165 TESTCASE DS    0H                                                       00014000
0000B4 9835 C0D2          000D8   166          LM    R3,R5,CONSTANT     LOOP CONTROLLING PARAMETERS.          00014100
0000B8 1813                       167 PASSLOOP LR    R1,R3              ADDRESS OF THE SYMBOL TO BE ADDED.    00014200
0000BA 45E0 C018          0001E   168          BAL   R14,ENTER           ENTER IT.                            00014300
0000BE 47FF C0BC          000C2   169          B     *+4(R15)           TEST THE RETURN CODE.                 00014400
0000C2 47F0 C0C2          000C8   170          B     ADDEDOK             = 0, CONTINUE.                       00014500
0000C6 0004                       171          DC    H'4'                = 4, TERMINATE.                      00014600
0000C8 8734 C0B2          000B8   172 ADDEDOK  BXLE  R3,R4,PASSLOOP     CONTINUE WITH ADDITIONS.              00014700
0000CC 0014                       173          DC    H'20'              DUMP TO SEE TABLE * * * * * * * * * * 00014800
0000CE 58DD 0004          00004   174          L     R13,4(R13)                                               00014900
0000D2 98EC D00C          00C0C   175          LM    R14,R12,12(R13)    RESTORE CALLER'S REGISTERS.           00015000
0000D6 07FE                       176          BR    R14                RETURN TO CALLER.                     00015100


                                  178 ***********************************************************************  00015300
                                  179 *                                                                        00015400
                                  180 *        SYMBOLS TO BE ADDED TO THE SYMBOL TABLE.                        00015500
                                  181 *                                                                        00015600
                                  182 ***********************************************************************  00015700
0000D8 000000E40000000A           183 CONSTANT DC    A(SYMLIST,10,SYMLSTND-1)                                00015800
0000E4 0001C1404040404040         184 SYMLIST  DC    H'1',CL8'A'                                             00015900
0000EE 0002C1C140404040           185          DC    H'2',CL8'AA'                                            00016000
0000F8 0003C1C1C1404040           186          DC    H'3',CL8'AAA'                                           00016100
000102 0001C24040404040           187          DC    H'1',CL8'B'                                             00016200
00010C 0002C2C240404040           188          DC    H'2',CL8'BB'                                            00016300
000116 0003C2C2C2404040           189          DC    H'3',CL8'BBB'                                           00016400
000120 0002C3C340404040           190          DC    H'2',CL8'CC'                                            00016500
00012A 0003C4C4C4404040           191          DC    H'3',CL8'DDD'                                           00016600
000134 0003D4D4D4404040           192          DC    H'3',CL8'MMM'                                           00016700
00013E 0006E2C9E7D6C6F1           193          DC    H'6',CL8'SIXOF1'                                        00016800
000148 0008C1D3D3C5C9C7           194          DC    H'8',CL8'ALLEIGHT'                                      00016900
000152 0000E3C5E2E340D3           195          DC    H'0',CL8'TEST L=0'                                      00017000
00015C 0006D5C1D4C57BF6           196          DC    H'6',CL8'NAME#6'                                        00017100
000166                            197 SYMLSTND EQU   *                                                       00017200


000166 0000
000168 0000000000000000           199 INDEX    DC    8F'0'              THUMB INDEX                           00017400
000188 0000018C                   200 NXAVAIL  DC    A(DICTNARY)        NEXT AVAILABLE DICTIONARY ADDRESS.    00017500
00018C 0000000000000000           201 DICTNARY DC    300X'0'            DICTIONARY                            00017600
0002B8                            202 SAVEAREA DS    18F                SAVE AREA FOR DICTIONARY BUILDING     00017700
                                  203 *                                  ROUTINE.                              00017800
                                  204          END                                                             00017900
```

9/16/70

| POS.ID | REL.ID | FLAGS | ADDRESS |
|---|---|---|---|
| 01 | 01 | 0C | 0000D8 |
| 01 | 01 | 0C | 0000E0 |
| 01 | 01 | 0C | 000188 |

9/16/70

| SYMBOL | LEN | VALUE | DEFN | REFERENCES | | | | | | | | | | | | | | |
|---|---|---|---|---|---|---|---|---|---|---|---|---|---|---|---|---|---|---|
| ADDEDOK | 00004 | 000008 | 00172 | 0170 | | | | | | | | | | | | | | |
| COMPARE | 00006 | 000CA8 | 00133 | 0107 | | | | | | | | | | | | | | |
| CONSTANT | 00004 | 0000D8 | 00183 | 0166 | | | | | | | | | | | | | | |
| DICTNARY | 00001 | 00018C | 00201 | 0200 | | | | | | | | | | | | | | |
| DUPE | 00004 | 00009A | 00129 | 0108 | | | | | | | | | | | | | | |
| ENTER | 00004 | 00001E | 00093 | 0168 | | | | | | | | | | | | | | |
| ENTERC | 00006 | 00006E | 00116 | 0106 | 0113 | | | | | | | | | | | | | |
| EXIT | 00004 | 000094 | 00126 | 0130 | | | | | | | | | | | | | | |
| INDEX | 00004 | 000168 | 00199 | 0102 | 0105 | | | | | | | | | | | | | |
| LOOP | 00004 | 00004C | 00107 | 0104 | 0115 | | | | | | | | | | | | | |
| MOVE | 00006 | 0000A2 | 00132 | 0121 | | | | | | | | | | | | | | |
| NOENTRY | 00001 | 00009A | 00128 | 0095 | 0098 | | | | | | | | | | | | | |
| NXAVAIL | 00004 | 000188 | 00200 | 0116 | 0118 | 0120 | | | | | | | | | | | | |
| PASSLOOP | 00002 | 0000B8 | 00167 | 0172 | | | | | | | | | | | | | | |
| R0 | 00001 | 000000 | 00004 | 0093 | 0126 | | | | | | | | | | | | | |
| R1 | 00001 | 000001 | 00005 | 0094 | 0094 | 0096 | 0132 | 0133 | 0167 | | | | | | | | | |
| R10 | 00001 | 00000A | 00014 | 0105 | 0109 | 0110 | 0116 | | | | | | | | | | | |
| R11 | 00001 | 00000B | 00015 | 0100 | 0107 | 0109 | 0119 | 0121 | 0122 | 0122 | 0123 | | | | | | | |
| R12 | 00001 | 000000 | 00016 | 0020 | 0021 | 0022 | 0175 | | | | | | | | | | | |
| R13 | 00001 | 00000D | 00017 | 0020 | 0024 | 0025 | 0026 | 0027 | 0027 | 0093 | 0126 | 0174 | 0174 | 0175 | | | | |
| R14 | 00001 | 00000E | 00018 | 0020 | 0102 | 0103 | 0103 | 0109 | 0114 | 0126 | 0127 | 0133 | 0168 | 0175 | 0176 | | | |
| R15 | 00001 | 00000F | 00019 | 0023 | 0024 | 0025 | 0026 | 0093 | 0096 | 0097 | 0097 | 0099 | 0100 | 0101 | 0102 | 0105 | 0125 | 0125 |
| | | | | 0129 | 0169 | | | | | | | | | | | | | |
| R2 | 00001 | 000002 | 00006 | 0118 | 0119 | 0123 | 0123 | 0124 | 0124 | 0132 | | | | | | | | |
| R3 | 00001 | 000003 | 00007 | 0119 | 0120 | 0166 | 0167 | 0172 | | | | | | | | | | |
| R4 | 00001 | 000004 | 00008 | 0172 | | | | | | | | | | | | | | |
| R5 | 00001 | 000005 | 00009 | 0166 | | | | | | | | | | | | | | |
| R6 | 00001 | 000006 | 00010 | | | | | | | | | | | | | | | |
| R7 | 00001 | 000007 | 00011 | | | | | | | | | | | | | | | |
| R8 | 00001 | 000008 | 00012 | | | | | | | | | | | | | | | |
| R9 | 00001 | 000009 | 00013 | 0111 | 0112 | 0112 | 0114 | | | | | | | | | | | |
| SAVEAREA | 00004 | 0002B8 | 00202 | 0023 | | | | | | | | | | | | | | |
| SYMBOLTB | 00001 | 000000 | 00002 | | | | | | | | | | | | | | | |
| SYMLIST | 00002 | 000CE4 | 00184 | 0183 | | | | | | | | | | | | | | |
| SYMLSTND | 00001 | 000166 | 00197 | 0183 | | | | | | | | | | | | | | |
| TESTCASE | 00002 | 0000B4 | 00165 | 0047 | | | | | | | | | | | | | | |
| WORD | 00004 | 0000B0 | 00134 | 0110 | 0111 | | | | | | | | | | | | | |

NO STATEMENTS FLAGGED IN THIS ASSEMBLY
*STATISTICS* SOURCE RECORDS (SYSIN) = 179 SOURCE RECORDS (SYSLIB) = 25
*OPTIONS IN EFFECT* LIST, NODECK, LOAD, NORENT, XREF, NOTEST, ALGN, OS, LINECNT = 55
263 PRINTED LINES

```
 F44-LEVEL LINKAGE EDITOR OPTIONS SPECIFIED MAP,LET,LIST,NCAL
           VARIABLE OPTIONS USED -  SIZE=(45056,6144)-          DEFAULT OPTION(S) USED
IEW0000              ENTRY UTILITY


                                                    MODULE MAP


  CONTROL SECTION                        ENTRY

    NAME     ORIGIN  LENGTH                NAME   LOCATION     NAME   LOCATION     NAME   LOCATION     NAME   LOCATION

  SYMBOLTB       00     300
  UTILITY       300     5A0
                                         PRINT        362    PCHKRETN     5BE

 ENTRY ADDRESS       300
 TOTAL LENGTH        8A0

****GO        DOES NOT EXIST BUT HAS BEEN ADDED TO DATA SET
```

```
F.P. REGS.  00.01D5B8 0001DA90   40.058132 00000050   FD.000000 00000000   E2.E8E2E5 E3D6C340

REGS 0-7     FFFFFF2E 0004E062 0001DAAC 0004E062    0000000A 0004E0C5 0001D600 0001AA48
REGS 8-15    0001DA90 00000000 0001DAB8 00000000    6F04DF66 0004E218 04E0EC00 00000000

000000    00000000 00000000 00000000 00000000    0004DF60 00000000 FF040080 A000A93C  *................................*
000020    00040003 50006A3E FFA50005 AF04DFB0    0000FF00 00000000 FE040132 80000A1E  *................................*
000040    0005A498 0C000001 00001468 00005920    083D5B00 0000996C 00040000 00007498  *................................*
000060    00040000 00007BC8 00040000 00007588    00000000 00012D10 00040000 0000751A  *.......H........................*

04DF60    90ECD00C 05C041F0 C2B250FD 000850DF    000418DF D703D008 D00847F0 C0AE900F  *.......0B...........P......0....*
04DF80    D00C1211 4780C094 48F10000 12FF4780    C09406F0 18BF89F0 000258EF C16212EE  *.........l.........0...0....A...*
04DFA0    4770C046 41AFC162 47F0C068 44B0C0A2    4780C094 41ABE00B D202C0AB A0005890  *......A..0..............K.......*
04DFC0    C0AA1299 4780C068 18E947F0 C046D202    A000C183 5820C182 413B200E 5030C182  *.........Z.0..K...A...A.......A.*
04DFE0    44B0C09C 41BB000B 4122B001 D7022000    20001BFF 980ED00C 07FE41F0 000447F0  *............P...............0...0*
04E000    C08ED200 20001002 D500E000 10020000    00000000 9835C0D2 181345E0 C01847FF  *..K.....N..............K........*
04E020    C0BC47F0 C0C20004 8734C0B2 001458DD    000498EC D00C07FE 0004E044 0000000A  *...0.B..........................*
04E040    0004E0C5 0001C140 40404040 40400002    C1C14040 40404040 0003C1C1 C1404040  *...E..A        ..AA       ..AAA    *
04E060    40400001 C2404040 40404040 0002C2C2    40404040 40400003 C2C2C240 40404040  *  ..B        ..BB       ..BBB     *
04E080    0002C3C3 40404040 40400003 C4C4C440    40404040 0003D4D4 D4404040 40400006  *..CC       ..DDD      ..MMM      ..*
04E0A0    E2C9E7D6 C6F14040 0008C1D3 D3C5C9C7    C8E30000 E3C5E2E3 40D37EF0 0006D5C1  *SIXOF1  ..ALLEIGHT..TEST L.O..NA*
04E0C0    D4C57BF6 40400000 04E0EC00 04E0FA00    04E10900 00000000 0000000C 00000000  *ME.6  ..........................*
04E0E0    00000000 00000000 0004E119 C1000000    00000000 00000000 0000C1C1 00000000  *.............A..............AA....*
04E100    00000000 00000000 00C1C1C1 00000000    00000000 00000000 00000000 00000000  *.........AAA....................*
04E120    00000000 00000000 00000000 00000000    00000000 00000000 00000000 00000000  *................................*
04E140    00000000 00000000 00000000 00000000    00000000 00000000 00000000 00000000  *................................*
04E160    00000000 00000000 00000000 00000000    00000000 00000000 00000000 00000000  *................................*
04E180    00000000 00000000 00000000 00000000    00000000 00000000 00000000 00000000  *................................*
04E1A0    00000000 00000000 00000000 00000000    00000000 00000000 00000000 00000000  *................................*
04E1C0    00000000 00000000 00000000 00000000    00000000 00000000 00000000 00000000  *................................*
04E1E0    00000000 00000000 00000000 00000000    00000000 00000000 00000000 00000000  *................................*
04E200    00000000 00000000 00000000 00000000    00000000 00000000 CA5E968C 00059F68  *................................*
04E220    00000000 FFFFFF2E 0004E062 0001DAAC    0004E062 0000000A 0004E0C5 0001D600  *.........................E..0.*
04E240    0001AA48 0001DA90 00000000 0001DAB8    00000000 6F04DF66 C004E218 8F04E01E  *.........................S.....*
04E260    00000000 05C004F0 07004110 C0100511    0F04E304 7FFF0A0E 58B00010 91108074  *.......0...........T.............*

04E820    50401010 4340A008 12444780 885C4820    A00E5420 8A9E4780 87FC0620 5A20B010  *. ... ..........................*
```



**********

```
 QQQQQQQQQQ   UU         UU  EEEEEEEEEEEE  UU         UU  EEEEEEEEEEEE                WW         WW  PPPPPPPPPPP
QQQQQQQQQQQQ  UU         UU  EEEEEEEEEEEE  UU         UU  EEEEEEEEEEEE                WW         WW  PPPPPPPPPPPP
QQ         QQ  UU         UU  EE            UU         UU  EE                          WW         WW  PP         PP
QQ         QQ  UU         UU  EE            UU         UU  EE                          WW         WW  PP         PP
QQ         QQ  UU         UU  EE            UU         UU  EE                          WW         WW  PP         PP
QQ         QQ  UU         UU  EEEEEEEE      UU         UU  EEEEEEEE                    WW         WW  PPPPPPPPPPPP
QQ         QQ  UU         UU  EEEEEEEE      UU         UU  EEEEEEEE                    WW    WW   WW  PPPPPPPPPPP
QQ     QQ  QQ  UU         UU  EE            UU         UU  EE                          WW   WWWW  WW  PP
QQ      QQ QQ  UU         UU  EE            UU         UU  EE                          WW WW   WW WW  PP
QQ       QQQQ  UU         UU  EE            UU         UU  EE                          WWWW     WWWW  PP
QQQQQQQQQQQQ   UUUUUUUUUUUUU  EEEEEEEEEEEE  UUUUUUUUUUUUU  EEEEEEEEEEEE                WWW       WWW  PP
 QQQQQQQQ QQ    UUUUUUUUUUU   EEEEEEEEEEEE   UUUUUUUUUUU   EEEEEEEEEEEE                WW         WW  PP
```

```
 9999999999
999999999999
99        99
99        99
99        99
999999999999
999999999999
          99
          99
99        99
999999999999
 9999999999
```

**********

EXTERNAL SYMBOL DICTIONARY

| SYMBOL | TYPE | ID | ADDR | LENGTH | LD ID |
|---|---|---|---|---|---|
| QUEUESUP | SD | 01 | 000000 | 0001F4 | |
| PCHKRETN | ER | 02 | | | |

```
 LOC  OBJECT CODE    ADDR1 ADDR2  STMT   SOURCE STATEMENT                                                F08APR70   9/17/70

000000                                 1 QUEUESUP CSECT                                                          00000100
                                       2          COPY  MHMBEGIN                                                 00000200
000000                                 3 R0       EQU   0                                                        00000700
000001                                 4 R1       EQU   1                                                        00000800
000002                                 5 R2       EQU   2                                                        00000900
000003                                 6 R3       EQU   3                                                        00001000
000004                                 7 R4       EQU   4                                                        00001100
000005                                 8 R5       EQU   5                                                        00001200
000006                                 9 R6       EQU   6                                                        00001300
000007                                10 R7       EQU   7                                                        00001400
000008                                11 R8       EQU   8                                                        00001500
000009                                12 R9       EQU   9                                                        00001600
00000A                                13 R10      EQU   10                                                       00001700
00000B                                14 R11      EQU   11                                                       00001800
00000C                                15 R12      EQU   12                                                       00001900
00000D                                16 R13      EQU   13                                                       00002000
00000E                                17 R14      EQU   14                                                       00002100
00000F                                18 R15      EQU   15                                                       00002200
000000 90EC D00C            0000C     19         STM   R14,R12,12(R13)     SAVE THE CALLER'S REGISTERS          00002400
000004 05C0                           20         BALR  R12,0               ESTABLISH PROGRAM BASE               00002500
000006                                21         USING *,R12               LET THE ASSEMBLER KNOW.              00002600
000006 41FC C08E            00094     22         LA    R15,SAVEAREA        ADDRESS OF MY SAVE AREA              00002700
00000A 50FD 0008            00008     23         ST    R15,8(R13)          BACKWARD CHAIN                       00002800
00000E 50DF 0004            00004     24         ST    R13,4(R15)          FORWARD CHAIN                        00002900
000012 18DF                           25         LR    R13,R15             ESTABLISH MY SAVE AREA               00003000
000014 D703 D008 D008 00008 00008     26         XC    8(4,R13),8(R13)     TERMINATE THE FORWARD CHAIN          00003100
                                      27 *       END OF STANDARD ENTRY LINKAGE CONVENTIONS.                       00003200
                                      28         PRINT OFF                                                        00000300
```

```
LOC   OBJECT CODE    ADDR1 ADDR2  STMT   SOURCE STATEMENT                                          F08APR70   9/17/70

                                   35 ***********************************************************************  00001000
                                   36 *                                                                       00001100
                                   37 *        THIS CODE TESTS ALL THE QUEUEING ROUTINES. IT LINKS TO EACH    00001200
                                   38 *        4 TIMES. IT WILL ADD 2 ELEMENTS TO THE QUEUE, TAKE A DUMP,     00001300
                                   39 *        ADD A THIRD ELEMENT, TAKE ANOTHER DUMP, REMOVE THE FIRST       00001400
                                   40 *        ELEMENT FROM THE QUEUE, AND TAKE ANOTHER DUMP. THIS            00001500
                                   41 *        SEQUENCE ALLOWS YOU TO SEE THE CONTENTS OF EACH QUEUE AS IT    00001600
                                   42 *        IS BEING BUILT.                                                00001700
                                   43 *                                                                       00001800
                                   44 ***********************************************************************  00001900


                                   46 ***********************************************************************  00002100
                                   47 ************************* INSTRUCTIONS TO THE READER. ****************  00002200
                                   48 ************************* ------------ -- --- ------- ****************  00002300
                                   49 ***********************************************************************  00002400
                                   50 *        READ OVER THE TEXT THAT FOLLOWS THIS CODE, IT EXPLAINS THE     00002500
                                   51 *        TERMINOLOGY ASSOCIATED WITH QUEUES. WHEN YOU HAVE FINISHED     00002600
                                   52 *        READING THAT INFORMATION, DIRECTIONS WILL BE GIVEN TO TELL     00002700
                                   53 *        YOU WHAT TO DO NEXT. DO NOT WASTE TIME READING THE TEST CODE.. 00002800
                                   54 ***********************************************************************  00002900

00002A 4150 C0D6            000DC  56 BEGIN    LA    R5,QUINGLST          ADDRESS OF QUEUEING ROUTINE ADDRS.   00003100
00002E 4160 0008            00008  57          LA    R6,8                 INCREMENT.                           00003200
000032 4170 C0ED            000F3  58          LA    R7,QELEMNTS-1        ADDRESS LIST END.                    00003300
000036 4180 0004            00004  59          LA    R8,4                 INCREMENT.                           00003400
00003A 4190 C0F9            000FF  60          LA    R9,BLOCK1-1          ADDRESS OF LIST END.                 00003500
00003E 41A0 C0EE            000F4  61 TESTLOOP LA    R10,QELEMNTS         ADDR. OF ELEMENTS ADDRESS LIST.      00003600
000042 41B0 0002            00002  62          LA    R11,2                LOOP COUNT BEFORE FIRST DUMP.        00003700
000046 581A 0000            00000  63 QENTER   L     R1,0(R10)            ADDRESS OF A QUEUE ELEMENT TO ADD.   00003800
00004A 58F5 0000            00000  64          L     R15,0(R5)            ADDR. OF ENQUEUE SUB-ROUTINE.        00003900
00004E 05EF                        65          BALR  R14,R15              LINK TO ENQUEUE ROUTINE.             00004000
000050 46B0 C050            00056  66          BCT   R11,NODUMP           DUMP ONLY AFTER ADDING 2 ELEMENTS.   00004100
000054 0000                        67          DC    H'0'                                                    00004200
000056 87A8 C040            00046  68 NODUMP   BXLE  R10,R8,QENTER        ADD TOTAL OF THREE ELEMENTS TO Q.    00004300
00005A 0001                        69          DC    H'1'                 DUMP AFTER ADDING 3RD.               00004400
00005C 1B11                        70          SR    R1,R1                RESET PARAMETER REGISTER.            00004500
00005E 58F5 0004            00004  71          L     R15,4(R5)            ADDR. OF DEQUEUE SUB-ROUTINE.        00004600
000062 05EF                        72          BALR  R14,R15              LINK TO DEQUEUE ROUTINE.             00004700
000064 1211                        73          LTR   R1,R1                FIND ONE ?                           00004800
000066 4720 C06A            00070  74          BP    DUMPIT               YES, TAKE A DUMP.                    00004900
00006A 0002                        75          DC    H'2'                 NO, TAKE A DUMP (DEBUG).             00005000
00006C 47F0 C06C            00072  76          B     DUMPIT+2                                                  00005100
000070 0003                        77 DUMPIT  DC    H'3'                                                      00005200
000072 D707 CCFE CCFE 00104 00104  78          XC    BLOCK1+4(8),BLOCK1+4  CLEAR THE                          00005300
000078 D707 C112 C112 00118 00118  79          XC    BLOCK2+4(8),BLOCK2+4   LINK FIELDS                       00005400
00007E D707 C126 C126 0012C 0012C  80          XC    BLOCK3+4(8),BLOCK3+4   IN THE BLOCKS.                    00005500
000084 8756 C038            0003E  81          BXLE  R5,R6,TESTLOOP       LOOP THROUGH ALL ROUTINES.           00005600
000088 58DD 0004            00004  82 RETURN   L     R13,4(R13)           RELOAD SAVE REGISTER ADDRESS.        00005700
00008C 98EC D00C            0000C  83          LM    R14,R12,12(R13)      RELOAD CALLER'S REGISTERS.           00005800
000090 07FE                        84          BR    R14                  RETURN                               00005900
```

```
  LOC  OBJECT CODE    ADDR1 ADDR2  STMT   SOURCE STATEMENT                                          F08APR70   9/17/70

000094                              86 SAVEAREA DS    18F                                                        00006100
0000DC 0000013C00000158             87 QUINGLST DC    A(FIFOENQ1,FIFODEQ1)                                       00006200
0000E4 0000016C00000182             88          DC    A(LIFOENQ2,LIFODEQ2)                                       00006300
0000EC 000001A4000001CC             89          DC    A(PRTYENQ2,PRTYDEQ2)                                       00006400


000F4 0000010000000114              91 QELEMNTS DC    A(BLOCK1,BLOCK2,BLOCK3)                                    00006600
000100 09                           92 BLOCK1   DC    X'09'              PRIORITY                                00006700
000101 000000                       93          DC    AL3(0)                                                     00006800
000104 0000000000000000             94          DC    4F'0'                                                      00006900
000114 01                           95 BLOCK2   DC    X'01'              PRIORITY                                00007000
000115 000000                       96          DC    AL3(0)                                                     00007100
000118 0000000000000000             97          DC    4F'0'                                                      00007200
000128 06                           98 BLOCK3   DC    X'06'              PRIORITY                                00007300
000129 000000                       99          DC    AL3(0)                                                     00007400
00012C 0000000000000000            100          DC    4F'0'                                                      00007500


000000                             102 QELEMENT DSECT                   DUMMY SECTION FOR A QUEUE ELEMENT.      00007700
000000                             103 PRTY     DS    C                  PRIORITY VALUE                          00007800
000001                             104          DS    AL3                                                        00007900
000004                             105 LINKFWRD DS    F                   FORWARD LINK FIELD.                    00008000
000008                             106 LINKBKWD DS    F                   BACKWARD LINK FIELD                    00008100
00000C                             107          DS    2F                                                         00008200
000004                             108 DISPLFWD EQU   LINKFWRD-QELEMENT  DISPLACEMENT TO FORWARD LINK FIELD.    00008300
000008                             109 DISPLBWD EQU   LINKBKWD-QELEMENT  DISPLACEMENT TO BACKWARD LINK FIELD.   00008400


000000                             111 QUEUESUP CSECT                   RESUME CSECT.                           00008600
```

```
LOC  OBJECT CODE    ADDR1 ADDR2  STMT   SOURCE STATEMENT                                    F08APR70   9/17/70

                                 113 ************************************************************************ 00008800
                                 114 *                                                                      00008900
                                 115 *        ******************* BEGIN READING HERE. ****************       00009000
                                 116 *                                                                      00009100
                                 117 *        YOU ALREADY KNOW WHAT A "QUEUE" IS, SO I WON'T BOTHER TO      00009200
                                 118 *        RE-EXPLAIN. THE FIRST THING THAT I DO WANT TO LOOK AT IS      00009300
                                 119 *        SOME OF THE TERMINOLOGY ASSOCIATED WITH QUEUES.               00009400
                                 120 *                                                                      00009500
                                 121 *        FIRST, QUEUES ARE MADE UP OF THINGS THAT REPRESENT THE        00009600
                                 122 *        ENQUEUED REQUEST. WELL, "THINGS" PROBABLY ISN'T A VERY        00009700
                                 123 *        GOOD TERM TO USE, BECAUSE "THINGS" ENCOMPASS A LOT OF         00009800
                                 124 *        "STUFF" NOT PERTINENT TO QUEUES. SO, I'LL CALL THEM           00009900
                                 125 *        QUEUE "ELEMENTS" OR "BLOCKS" AS THEY ARE FREQUENTLY           00010000
                                 126 *        CALLED BY SOME SYSTEM PROGRAMMERS. THESE "BLOCKS"             00010100
                                 127 *        ARE NOTHING MORE THAN AREAS OF CORE STORAGE THAT CONTAIN      00010200
                                 128 *        DATA RELATED TO THE "REQUEST" WE HAVE MADE THAT CAUSED        00010300
                                 129 *        US TO GET PUT IN THE QUEUE IN THE FIRST PLACE.                00010400
                                 130 *                                                                      00010500
                                 131 *        BEHOLD A "BLOCK":    +----------------------------+           00010600
                                 132 *                             | SOME DATA ABOUT THE REQUEST|           00010700
                                 133 *                             +----------------------------+           00010800
                                 134 *                             0                            +N          00010900
                                 135 *        THAT'S COOL, ISN'T IT ???                                     00011000
                                 136 *                                                                      00011100
                                 137 *        DON'T FORGET THAT A QUEUE IS A LIST OF ITEMS, AND OUR SINGLE  00011200
                                 138 *        BLOCK DOESN'T LOOK MUCH LIKE A LIST, SO WE ARE GOING TO       00011300
                                 139 *        HAVE TO PUT TOGETHER SOME KIND OF LIST TO LET THE QUEUE       00011400
                                 140 *        PROCESSING ROUTINE KNOW THE ORDER IN WHICH THE ITEMS ARE      00011500
                                 141 *        TO BE HANDLED (PROCESSED).                                    00011600
                                 142 *                                                                      00011700
                                 143 *        MORE LIKELY THAN NOT, HOWEVER, THE WRITER OF THE QUEUE        00011800
                                 144 *        PROCESSING ROUTINE IS NOT INTERESTED IN BUILDING A SEPARATE   00011900
                                 145 *        LIST OF ADDRESSES, POINTING TO ALL THE "ELEMENTS" IN THE      00012000
                                 146 *        QUEUE (YOU KNOW HOW PROGRAMMER'S CAN BE....),                 00012100
                                 147 *        SO WE WILL PROBABLY HAVE THE ELEMENTS POINT TO EACH OTHER.    00012200
                                 148 *        ALSO, NOT HAVING A FIXED NUMBER OF POINTERS TO THE ELEMENTS   00012300
                                 149 *        IN THE QUEUE, WE ARE ABLE TO HAVE A QUEUE OF VARYING LENGTH   00012400
                                 150 *        (ANY WHERE FROM 0 TO INFINITY OR THE END OF OUR AVAILABLE     00012500
                                 151 *        CORE STORAGE, WHICHEVER COMES FIRST).                         00012600
                                 152 *                                                                      00012700
                                 153 *        THE WAY IN WHICH THE INDIVIDUAL BLOCKS ADDRESS EACH OTHER     00012800
                                 154 *        BRINGS A COUPLE OF NEW TERMS INTO THE DISCUSSION.             00012900
                                 155 *                                                                      00013000
                                 156 ************************************************************************ 00013100
```

```
LOC  OBJECT CODE    ADDR1 ADDR2  STMT   SOURCE STATEMENT                                    F08APR70   9/17/70

                                 158 ***********************************************************************  00013300
                                 159 *                                                                        00013400
                                 160 *        IN ORDER TO HAVE A QUEUE AT ALL, THE ELEMENTS WITHIN IT MUST    00013500
                                 161 *        BE LINKED TO OTHER ELEMENTS IN THE QUEUE.                       00013600
                                 162 *                                                                        00013700
                                 163 *        IF EACH SINGLE ELEMENT POINTS TO THE ONE THAT FOLLOWS IT        00013800
                                 164 *        IN THE QUEUE, THAT IS, EACH ELEMENT CONTAINS THE ADDRESS OF     00013900
                                 165 *        ONLY ONE OTHER ELEMENT IN THE QUEUE, THE QUEUE IS SAID TO BE    00014000
                                 166 *        "SINGLE THREADED". IN OTHER WORDS, THERE IS ONLY A SINGLE       00014100
                                 167 *        ADDRESS CHAIN (THREAD) LINKING THE ELEMENTS TOGETHER.           00014200
                                 168 *        FOR EXAMPLE, THIS IS A "SINGLE THREADED" QUEUE:                 00014300
                                 169 *                                                                        00014400
                                 170 *        +--------+      +--------+      +--------+      +--------+      00014500
                                 171 *        |    +---+----->|    +---+----->|    +---+----->| 000000 |      00014600
                                 172 *        +--------+      +--------+      +--------+      +--------+      00014700
                                 173 *        |        |      |        |      |        |      |        |      00014800
                                 174 *        |        |      |        |      |        |      |        |      00014900
                                 175 *        |        |      |        |      |        |      |        |      00015000
                                 176 *        +--------+      +--------+      +--------+      +--------+      00015100
                                 177 *                                                                        00015200
                                 178 *        THE ZEROS IN THE LAST BLOCK ARE USED TO SHOW THAT THIS IS       00015300
                                 179 *        THE LAST BLOCK IN THE QUEUE (SAME AS IN SYNONYM CHAINS).        00015400
                                 180 *                                                                        00015500
                                 181 *        OR , EACH ELEMENT MAY ADDRESS BOTH THE ELEMENT IN FRONT OF      00015600
                                 182 *        ITSELF, AS WELL AS THE ONE BEHIND ITSELF, MAKING UP A           00015700
                                 183 *        "DOUBLE-THREADED" QUEUE. THIS MIGHT BE DONE WHENEVER IT IS      00015800
                                 184 *        ADVANTAGEOUS TO KNOW THE WHEREABOUTS OF BOTH THE "PREDECESSOR"  00015900
                                 185 *        AND "SUCCESSOR" OF ANY ELEMENT (TO BE ABLE TO SEARCH BOTH       00016000
                                 186 *        DIRECTIONS IN THE QUEUE).                                       00016100
                                 187 *        HERE IS A DIAGRAM SHOWING THE RELATIONSHIP OF ELEMENTS IN       00016200
                                 188 *        A "DOUBLE THREADED" QUEUE.                                      00016300
                                 189 *                                                                        00016400
                                 190 *      0+--------+     0+--------+     0+--------+     0+--------+      00016500
                                 191 *       |        |      |        |      |        |      |        |      00016600
                                 192 *     +4+--------+    +4+--------+    +4+--------+    +4+--------+      00016700
                                 193 *       | 000000 |<-----+---+     |<-----+---+     |<-----+---+     |  00016800
                                 194 *     +8+--------+    +8+--------+    +8+--------+    +8+--------+      00016900
                                 195 *       |    +---+----->|    +---+----->|    +---+----->| 000000 |      00017000
                                 196 *    +12+--------+   +12+--------+   +12+--------+   +12+--------+      00017100
                                 197 *       |        |      |        |      |        |      |        |      00017200
                                 198 *       |        |      |        |      |        |      |        |      00017300
                                 199 *       |        |      |        |      |        |      |        |      00017400
                                 200 *       |        |      |        |      |        |      |        |      00017500
                                 201 *       +--------+      +--------+      +--------+      +--------+      00017600
                                 202 *                                                                        00017700
                                 203 *        IF YOU LOOK CLOSELY, YOU WILL NOTICE THE SIMILARITY BETWEEN     00017800
                                 204 *        THE ABOVE QUEUE AND THE REGISTER SAVE AREAS THAT YOU HAVE       00017900
                                 205 *        BEEN CONSTRUCTING, IF YOU HAVE BEEN FOLLOWING CONVENTIONS.      00018000
                                 206 *                                                                        00018100
                                 207 ***********************************************************************  00018200
```

```
LOC  OBJECT CODE    ADDR1 ADDR2  STMT   SOURCE STATEMENT                                    F08APR70   9/17/70
                                 209 ***********************************************************************  00018400
                                 210 *                                                                        00018500
                                 211 *        THE NEXT THING THAT WE OUGHT TO BE ABLE TO DO IS LOCATE THE     00018600
                                 212 *        START OF THE QUEUE, SO THAT WE KNOW WHO'S FIRST (FAIR IS        00018700
                                 213 *        FAIR). WE WILL DO THIS BY POINTING TO THE FIRST ELEMENT         00018800
                                 214 *        WITH A FULL WORD OF STORAGE. GIVEN THE FOLLOWING:               00018900
                                 215 *                                                                        00019000
                                 216 *        +--------+      +--------+      +--------+                      00019100
                                 217 *        |    +---+----->|    +---+----->| 000000 |                      00019200
                                 218 *        +--------+      +--------+      +--------+                      00019300
                                 219 *         HEAD PTR.      |        |      |        |                      00019400
                                 220 *                        |        |      |        |                      00019500
                                 221 *                        +--------+      +--------+                      00019600
                                 222 *                                                                        00019700
                                 223 *        WE HAVE A "SINGLE HEADED" QUEUE, IN THAT THERE IS A SINGLE      00019800
                                 224 *        POINTER TO THE START OR "HEAD" OF THE QUEUE. COMBINE TERMS      00019900
                                 225 *        AND WE FIND THAT THE ABOVE IS REALLY A "SINGLE-HEADED           00020000
                                 226 *        SINGLE-THREADED" QUEUE.                                         00020100
                                 227 *                                                                        00020200
                                 228 *        GET THE PICTURE ????                                            00020300
                                 229 *                                                                        00020400
                                 230 *        CARRY THIS A STEP FURTHER, AND WE MAY FIND THAT IT IS TO        00020500
                                 231 *        OUR ADVANTAGE (SOMETIMES) TO KNOW WHERE THE LAST ELEMENT        00020600
                                 232 *        IN THE QUEUE IS LOCATED ALSO, SO (ARE YOU READY FOR THIS ?)     00020700
                                 233 *        WE MIGHT HAVE A "DOUBLE-HEADED" QUEUE, AS IN THE FOLLOWING      00020800
                                 234 *        DIAGRAM. ( YOU MIGHT ALSO NOTICE THAT IT'S SINGLE-THREADED.)    00020900
                                 235 *                                                                        00021000
                                 236 *        +--------+      +--------+      +--------+      +--------+      00021100
                                 237 *        |    +---+----->|    +---+----->|    +---+----->| 000000 |      00021200
                                 238 *        +--------+      +--------+      +--------+   A  +--------+      00021300
                                 239 *        |    +---+-->+  |        |      |        |   |  |        |      00021400
                                 240 *        +--------+   |  |        |      |        |   |  |        |      00021500
                                 241 *        HEAD PTRS.   |  |        |      |        |   |  |        |      00021600
                                 242 *                     |  +--------+      +--------+   |  +--------+      00021700
                                 243 *                     V                               |                 00021800
                                 244 *                     +------------------------------>+                 00021900
                                 245 *                                                                        00022000
                                 246 *        YOU CAN RELAX NOW, FOR AS FAR AS I KNOW, NO FAR-OUT THINKERS    00022100
                                 247 *        HAVE ATTEMPTED TO DESCRIBE ANY "TRIPLE-HEADED, QUINTUPLE-       00022200
                                 248 *        THREADED, OCTAL-BASED, RECIPROCATING, BIFURCATED, PARAMETRIC    00022300
                                 249 *        QUEUE", AT LEAST NOT FOR THE MOMENT.                            00022400
                                 250 *                                                                        00022500
                                 251 ***********************************************************************  00022600
```

```
LOC  OBJECT CODE    ADDR1 ADDR2  STMT   SOURCE STATEMENT                                    F08APR70   9/17/70
                                 253 ***********************************************************************  00022800
                                 254 *                                                                       00022900
                                 255 *        WELL, THAT'S GROOVY, RIGHT ? BUT, ONCE WE'VE GOTTEN ALL THESE  00023000
                                 256 *        ELEMENTS TIED UP IN A QUEUE, WE OUGHT TO DO SOMETHING ABOUT    00023100
                                 257 *        GETTING THEM OFF THE QUEUE. AFTER ALL, THEY WERE QUEUED FOR    00023200
                                 258 *        A REASON (TO GET SOMETHING DONE).                              00023300
                                 259 *                                                                       00023400
                                 260 *        THE ORDER IN WHICH THE ELEMENTS ARE HANDLED (I.E., ADDED TO    00023500
                                 261 *        AND REMOVED FROM THE QUEUE), PLAYS A LARGE PART IN THE NAMING  00023600
                                 262 *        OF THE QUEUE. LET'S TAKE A LOOK AT THE DIFFERENT METHODS       00023700
                                 263 *        OF PROCESSING THE QUEUE ELEMENTS.                              00023800
                                 264 *                                                                       00023900
                                 265 *        FIRST, AND PROBABLY CLOSEST TO WHAT YOU EXPERIENCE IN          00024000
                                 266 *        YOUR DAILY ENCOUNTERS WITH QUEUES (STANDING IN LINE FOR        00024100
                                 267 *        SOMETHING), WE HAVE THE "FIRST COME, FIRST SERVED" PHILOSOPHY. 00024200
                                 268 *        EXCEPT THAT IN THE STANDARD TERMINOLOGY IT'S CALLED FIRST      00024300
                                 269 *        IN, FIRST OUT (FOR THE ACRONYM COLLECTOR-FIFO), BECAUSE THE    00024400
                                 270 *        FIRST ELEMENT ENTERED IN THE QUEUE IS THE FIRST ONE TO BE      00024500
                                 271 *        SERVICED, OR TAKEN OUT OF THE QUEUE. AFTER ALL, THE FIRST      00024600
                                 272 *        PERSON TO THE TICKET WINDOW DESERVES THE TICKETS FOR THE       00024700
                                 273 *        50-YARD LINE SEATS, OR FIRST ROW CENTER STAGE. RIGHT ?????     00024800
                                 274 *                                                                       00024900
                                 275 *        FOR THOSE OF YOU WHO DON'T AGREE TO THAT, PARTICULARLY THOSE   00025000
                                 276 *        WHO INVARIABLY ARRIVE LATE AT THE TICKET LINE, HERE IS A       00025100
                                 277 *        METHOD OF HANDLING A QUEUE WHICH IS YOU MIGHT PREFER.          00025200
                                 278 *                                                                       00025300
                                 279 *        LAST IN, FIRST OUT (LIFO) OR FIRST IN, LAST OUT (OPTOMISTIC    00025400
                                 280 *        POINT OF VIEW, (FILO)). IN THIS KIND OF QUEUE, THE ELEMENTS    00025500
                                 281 *        ARE ADDED AT THE TOP (OR BOTTOM) OF THE QUEUE, AND REMOVED     00025600
                                 282 *        STARTING AT THE BOTTOM (OR TOP) OF THE QUEUE. YOU MIGHT        00025700
                                 283 *        CONSIDER THIS TO BE UNNATURAL, BUT THINK OF THE FOLLOWING:     00025800
                                 284 *                                                                       00025900
                                 285 *        YOU WANT TO DRIVE DOWN TO THE STORE IN YOUR CAR, SO:           00026000
                                 286 *            1. YOU GET OUT YOUR IGNITION KEY.                          00026100
                                 287 *            2. WHEN YOU GET TO YOUR GARAGE, YOU FIND IT LOCKED.        00026200
                                 288 *            3. MUTTERING SOMETHING, YOU GET OUT YOUR GARAGE KEY AND    00026300
                                 289 *               MOMENTARILY "PUSH-DOWN" THE IGNITION KEY FOR LATER USE. 00026400
                                 290 *            4. NOW YOU UNLOCK THE GARAGE, AND PUT AWAY THAT KEY.       00026500
                                 291 *            5. LASTLY, YOU RETRIEVE YOUR IGNITION KEY, AND START       00026600
                                 292 *               YOUR CAR (THE THING YOU WANTED TO DO FIRST).            00026700
                                 293 *                                                                       00026800
                                 294 *        INITIALLY, YOU HAD WANTED TO USE THE IGNITION KEY, BUT THIS    00026900
                                 295 *        CAUSED YOU TO HAVE TO USE THE GARAGE KEY FIRST, "PUSHING-DOWN" 00027000
                                 296 *        THE USE OF THE IGNITION KEY FROM FIRST TO LAST. THE OVER-ALL   00027100
                                 297 *        ACTION THAT TOOK PLACE COULD BE DESCRIBED AS A "LAST-IN-       00027200
                                 298 *        FIRST-OUT" OR "FIRST-IN-LAST-OUT" OPERATION.                   00027300
                                 299 *                                                                       00027400
                                 300 ***********************************************************************  00027500
```

```
LOC  OBJECT CODE    ADDR1 ADDR2  STMT   SOURCE STATEMENT                                    F08APR70   9/17/70

                                 302 ************************************************************************* 00027700
                                 303 *                                                                       00027800
                                 304 *        THE PRECEEDING QUEUES WERE ORDERED ON THE BASIS OF ARRIVAL      00027900
                                 305 *        TIME OF THE REQUEST, BUT NO ONE CONSIDERED THAT ONE REQUEST     00028000
                                 306 *        MIGHT BE MORE URGENT THAN ANOTHER. SO, THE NEXT QUEUE TO        00028100
                                 307 *        BE CONSIDERED TAKES THE URGENCY OF THE REQUEST INTO             00028200
                                 308 *        CONSIDERATION, AND IT IS CALLED A "PRIORITY" QUEUE. EACH        00028300
                                 309 *        ELEMENT CONTAINS SOME FIELD WHICH GIVES THE PRIORITY OF         00028400
                                 310 *        THE PARTICULAR REQUEST. THE ELEMENT IS THEN ADDED TO THE        00028500
                                 311 *        QUEUE IN THE POSITION THAT IT DESERVES (BASED ON THE            00028600
                                 312 *        PRIORITY NUMBER THAT IT HAD BEEN ASSIGNED).                     00028700
                                 313 *                                                                       00028800
                                 314 *        HIGHER PRIORITY ELEMENTS BEING ADDED NEAR THE TOP OF THE        00028900
                                 315 *        QUEUE. AND THE LOWER PRIORITY ONES BEING ADDED NEARER TO        00029000
                                 316 *        THE BOTTOM END OF THE QUEUE.                                    00029100
                                 317 *                                                                       00029200
                                 318 ************************************************************************* 00029300
```

```
LOC  OBJECT CODE    ADDR1 ADDR2  STMT   SOURCE STATEMENT                                    F08APR70   9/17/70
                                 320 ************************************************************************ 00029500
                                 321 ********************** DIRECTIONS TO THE STUDENT. ********************** 00029600
                                 322 ********************** ---------- -- --- -------- ********************** 00029700
                                 323 ************************************************************************ 00029800
                                 324 *                                                                        00029900
                                 325 *        ON THE PAGES THAT FOLLOW, THERE ARE SAMPLES OF THE CODE         00030000
                                 326 *        WHICH MAY BE USED TO PROCESS SEVERAL OF THE DIFFERENT           00030100
                                 327 *        KINDS OF QUEUES THAT WE HAVE JUST DESCRIBED.                    00030200
                                 328 *                                                                        00030300
                                 329 *        FIRST, SCAN OVER THE DESCRIPTION OF THE QUEUE THAT THE          00030400
                                 330 *        CODE IS PROCESSING, AND BE CERTAIN THAT YOU UNDERSTAND          00030500
                                 331 *        WHAT THE QUEUE SHOULD LOOK LIKE.                                00030600
                                 332 *        THEN, LOOK AT THE FIRST OF THE THREE DUMPS THAT FOLLOW          00030700
                                 333 *        THE CODING SAMPLE. THIS DUMP SHOWS THE QUEUE AS IT WILL         00030800
                                 334 *        LOOK AFTER 'BLOCK1' AND 'BLOCK2' HAVE BEEN ADDED. USING         00030900
                                 335 *        THE CODE AND THE DATA IN THIS FIRST DUMP, DRAW A PICTURE        00031000
                                 336 *        OF THE QUEUE AS IT LOOKS NOW. USE THE WORK PAGE SUPPLIED        00031100
                                 337 *        (NEATNESS DOESN'T NECESSARILY COUNT).                           00031200
                                 338 *                                                                        00031300
                                 339 *        THE NEXT THING THAT WILL HAPPEN TO THE QUEUE IS THIS:           00031400
                                 340 *        THE ADDRESS OF 'BLOCK3' WILL BE PASSED TO THE ENQUEUE           00031500
                                 341 *        ROUTINE IN REGISTER 1. IN THE SPACE PROVIDED ON THE             00031600
                                 342 *        WORKSHEET, DRAW THE QUEUE AS IT WILL LOOK WHEN 'BLOCK3'         00031700
                                 343 *        HAS BEEN SUCCESSFULLY ENQUEUED. YOU MAY USE INTUITION           00031800
                                 344 *        OR THE CODE TO FIGURE OUT WHAT IT WILL LOOK LIKE, BUT           00031900
                                 345 *        BE CORRECT.....OR ELSE......                                    00032000
                                 346 *        NOW, CHECK YOUR DIAGRAM AGAINST THE DATA IN THE SECOND          00032100
                                 347 *        DUMP, WHICH HAS 'BLOCK3' ENQUEUED. IF YOUR DIAGRAM DOESN'T      00032200
                                 348 *        MATCH, YOU MAY:                                                 00032300
                                 349 *         A. GO BACK OVER THE CODE AND FIND OUT WHERE YOU WENT ASTRAY.   00032400
                                 350 *         B. WAIL, GNASH YOUR TEETH, AND SHOUT FOR YOUR INSTRUCTOR,      00032500
                                 351 *            WHO WILL LEAD YOU BACK TO THE STRAIGHT PATH....             00032600
                                 352 *                                                                        00032700
                                 353 *        LASTLY, THE DEQUEUE ROUTINE WILL BE LINKED TO, AND AN           00032800
                                 354 *        ELEMENT WILL BE REMOVED FROM THE QUEUE, IN ACCORDANCE           00032900
                                 355 *        WITH THE QUEUE'S METHOD OF PROCESSING. AGAIN, DRAW THE          00033000
                                 356 *        QUEUE AS IT SHOULD LOOK AFTER THE ELEMENT HAS BEEN              00033100
                                 357 *        REMOVED.                                                        00033200
                                 358 *        AS BEFORE, CHECK YOUR DIAGRAM AGAINST THE QUEUE THAT IS IN      00033300
                                 359 *        THE DUMP, AND THEN CHOOSE ONE FROM A. OR B. ABOVE, IF           00033400
                                 360 *        YOUR DIAGRAM DOESN'T MATCH.                                     00033500
                                 361 *                                                                        00033600
                                 362 *        AT THE END OF THIS TOPIC, YOU WILL BE GIVEN AN HONORARY         00033700
                                 363 *        "NORMAN ROCKWELL FAN CLUB" MEMBERSHIP OR A GIFT CERTIFICATE     00033800
                                 364 *        ENTITLING YOU TO A CORRESPONDENCE COURSE IN PENMANSHIP,         00033900
                                 365 *        DEPENDING ON THE ARTISTIC QUALITY OF YOUR DIAGRAMS.             00034000
                                 366 *        MONTHLY WINNERS WILL PARTICIPATE IN A "DRAW-OFF", TO BE         00034100
                                 367 *        HELD IN MISSOULA, MONTANA DURING THE ANNUAL ICE-SCULPTING       00034200
                                 368 *        FESTIVAL.                                                       00034300
                                 369 *                                                                        00034400
                                 370 ************************************************************************ 00034500
```

FIFOENQ1

```
 ****A1********
*  START FIFO   *
*    ENQUEUE    * ------->
*   ROUTINE.    *
 ***************

                *****A2*********
                *              *
                *GET ADDRESS OF *
                *   THE HEAD   *
                *   POINTER.   *
                *              *
                ***************
                       |
                       |
                       V
FENQ2           *****B2*********
                *              *
                *GET ADDRESS OF *
+-->            *THE NEXT BLOCK *
|               *   IN QUEUE   *
|               *              *
|               ***************
|                      |
|                      |
|                      V
|                    .*.
|                  C2   *.
|                .*       *.
| NO  .*IS THIS THE*.
+--  *. LAST IN THE .*
      *. QUEUE ? .*
        *.     .*
          *. .*
            * YES
                       |
                       |
                       V
                *****D2*********
                *  ADD THE NEW  *
                * BLOCK TO THE  *
                *  END OF THE   *
                *   QUEUE.      *
                *              *
                ***************
                       |
                       |
                       V
                 ****E2********
                *              *
                *   RETURN     *
                *              *
                ***************
```

FIFODEQ2

```
 ****A5********
*  START FIFO   *
*DEQUEUE ROUTINE*
*              *
 ***************
        |
        |
        V
 *****B5*********
*              *
*GET ADDRESS OF *
*FIRST BLOCK ON *
*   QUEUE.     *
*              *
***************
        |
        |
        V
      .*.
    C5   *.
  .*       *.
YES .*  IS THE   *.
+-- *.QUEUE EMPTY ?.*
      *.         .*
        *.     .*
          *. .*
            * NO
        |
        |
        V
 *****D5*********
*              *
*  DEQUEUE THE *
*  FIRST BLOCK *
*FROM THE QUEUE.*
*              *
***************
+---------->|
        |
        V
 ****E5********
*   RETURN TO  *
*    CALLER    *
*              *
***************
```

```
LOC  OBJECT CODE    ADDR1 ADDR2  STMT   SOURCE STATEMENT                                          F08APR70   9/17/70

                                  387 ***********************************************************************  00036200
                                  388 *                                                                      00036300
                                  389 *        THESE ROUTINES PROCESS A SINGLE-HEADED, SINGLE-THREADED,      00036400
                                  390 *        FIRST-IN-FIRST-OUT QUEUE.                                     00036500
                                  391 *                                                                      00036600
                                  392 ***********************************************************************  00036700


                                  394 ***********************************************************************  00036900
                                  395 *                                                                      00037000
                                  396 *        ENQUEUE SUBROUTINE.                                           00037100
                                  397 *                                                                      00037200
                                  398 *        ON ENTRY, REGISTER 1 CONTAINS THE ADDRESS OF THE ELEMENT TO   00037300
                                  399 *        BE ENQUEUED.                                                  00037400
                                  400 *                                                                      00037500
                                  401 ***********************************************************************  00037600


000000                            403          USING QELEMENT,R1                                             00037800
00013C 4120 C15E          00164   404 FIFOENQ1 LA    R2,FIFO1H1T-DISPLFWD FAKE THE ADDR. OF A BLOCK POINTING  00037900
000140 1832                       405 FENQ2    LR    R3,R2               TO THE FIRST ON THE QUEUE.            00038000
000142 5822 0004          00004   406          L     R2,DISPLFWD(R2)     GET THE ADDRESS OF THE NEXT.          00038100
000146 1222                       407          LTR   R2,R2               IS THIS THE LAST IN THE QUEUE ?       00038200
000148 4770 C13A          00140   408          BNZ   FENQ2                NO, SEARCH SOME MORE.                00038300
00014C D203 1004 3004 00004 00004 409          MVC   LINKFWRD,DISPLFWD(R3) YES, ENQUEUE THE NEW ONE.         00038400
000152 5013 0004          00004   410          ST    R1,DISPLFWD(R3)                                         00038500
000156 07FE                       411          BR    R14                 RETURN.                              00038600


                                  413 ***********************************************************************  00038800
                                  414 *                                                                      00038900
                                  415 *        DEQUEUE SUBROUTINE.                                           00039000
                                  416 *                                                                      00039100
                                  417 *        ON RETURN, REGISTER 1 WILL CONTAIN THE ADDRESS OF THE         00039200
                                  418 *        DEQUEUED ELEMENT. IF THE QUEUE WAS EMPTY, 0'S WILL BE         00039300
                                  419 *        RETURNED IN REGISTER 1.                                       00039400
                                  420 *                                                                      00039500
                                  421 ***********************************************************************  00039600


000158 5810 C162          00168   423 FIFODEQ1 L     R1,FIFO1H1T         FIRST ELEMENT ON QUEUE.           00039800
00015C 1211                       424          LTR   R1,R1               WAS THE QUEUE EMPTY ?             00039900
00015E 078E                       425          BCR   8,R14                YES, RETURN.                     00040000
000160 D203 C162 1004 00168 00004 426          MVC   FIFO1H1T,LINKFWRD    NO, DEQUEUE THE FIRST ELEMENT    00040100
000166 07FE                       427          BR    R14                  AND RETURN.                      00040200


000168 00000000                   429 FIFO1H1T DC    F'0'                HEAD FOR SINGLE HEADED FIFO QUEUE.  00040400
```

```
LOC  OBJECT CODE    ADDR1 ADDR2  STMT   SOURCE STATEMENT                                    F08APR70   9/17/70
                                 431 ***********************************************************************00040600
                                 432 *                                                                     00040700
                                 433 *        WORKSHEET FOR THE SINGLE HEADED, SINGLE THREADED FIFO QUEUE. 00040800
                                 434 *                                                                     00040900
                                 435 *        AFTER 'BLOCK1' AND 'BLOCK2' HAVE BEEN ADDED, THE QUEUE LOOKS 00041000
                                 436 *        LIKE THIS:                                                   00041100
                                 437 *                                                                     00041200
                                 438 *        'FIFO1H1T'                                                   00041300
                                 439 *        +--------+                                                   00041400
                                 440 *        |        |                                                   00041500
                                 441 *        +--------+                                                   00041600
                                 442 *                                                                     00041700
                                 443 *                                                                     00041800
                                 444 *                                                                     00041900
                                 445 *                                                                     00042000
                                 446 *                                                                     00042100
                                 447 *                                                                     00042200
                                 448 *                                                                     00042300
                                 449 *        AFTER 'BLOCK3' IS ENQUEUED, IT LOOKS LIKE THIS:              00042400
                                 450 *                                                                     00042500
                                 451 *        'FIFO1H1T'                                                   00042600
                                 452 *        +--------+                                                   00042700
                                 453 *        |        |                                                   00042800
                                 454 *        +--------+                                                   00042900
                                 455 *                                                                     00043000
                                 456 *                                                                     00043100
                                 457 *                                                                     00043200
                                 458 *                                                                     00043300
                                 459 *                                                                     00043400
                                 460 *                                                                     00043500
                                 461 *                                                                     00043600
                                 462 *                                                                     00043700
                                 463 *                                                                     00043800
                                 464 *        AFTER ONE ELEMENT HAS BEEN DEQUEUED, IT LOOKS LIKE THIS:     00043900
                                 465 *                                                                     00044000
                                 466 *        'FIFO1H1T'                                                   00044100
                                 467 *        +--------+                                                   00044200
                                 468 *        |        |                                                   00044300
                                 469 *        +--------+                                                   00044400
                                 470 *                                                                     00044500
                                 471 *                                                                     00044600
                                 472 *                                                                     00044700
                                 473 *                                                                     00044800
                                 474 *                                                                     00044900
                                 475 *                                                                     00045000
                                 476 *                                                                     00045100
                                 477 *                                                                     00045200
                                 478 ***********************************************************************00045300
```

```
F.P. REGS.  00.000000 0105A5F8   00.01B668 00000000   00.000000 00017568   00.002A3A 00000000

REGS 0-7     FFFFFF2E 0004D97C 00000000 0004D968    00014EE8 0004D944 00000008 0004D95B
REGS 8-15    00000004 0004D967 0004D960 00000000    6F04D86E 0004D8FC 4F04D8B8 0004D9A4

000000    00000000 00000000 00000000 00000000    0004D868 00000000 FF060000 80000000  *..................Q.............*
000020    FFA50001 4007E884 FFD50001 4F04D8BE    0000FF00 00000000 FE040235 80000A06  *.... .Y..N....Q.................*
000040    00000000 04000000 00001468 00005920    02C040A4 0000996C 00040000 00007498  *................. .............*
000060    00040000 00007BC8 00040000 00007588    00000000 00012D10 00040000 0000751A  *.......H........................*

04D860    00000000 00000000 90ECD00C 05C041F0    C08E50FD 000850DF 000418DF D703D008  *...............0............P...*
04D880    D00858F0 C1EAD201 F000C022 47F0C024    07FE4150 C0D64160 00084170 C0ED4180  *...0A.K.0....0.......0..........*
04D8A0    00044190 C0F941A0 C0EE41B0 0002581A    000058F5 000005EF 46BCC050 000087A8  *.....9.............5............*
04D8C0    C0400001 1B1158F5 000405EF 12114720    C06A0002 47F0C06C 0003D7C7 C0FEC0FE  *. .....5.............0....P.....*
04D8E0    D707C112 C112D707 C126C126 8756C038    58DD0004 98ECD00C 07FE4300 4075D505  *P.A.A.P.A.A................. .N.*
04D900    00059F68 00000000 47F096C0 41700005    490098CA 47709652 47F096C0 15374780  *.........0...............0......*
04D920    967A95FF 60024770 987CD505 601C8000    47809620 41303001 418080C6 4B0098EA  *..........N.....................*
04D940    47FC9646 0004D9A4 0004D9C0 0004D9D4    0004D9EA 0004DA0C 0004DA34 0004D968  *.0....R...R...RM..R...........R.*
04D960    0004D97C 0004D990 09000000 0004D97C    00000000 00000000 00000000 01000000  *..R...R.......R.................*
04D980    000C0000 00000000 00000000 00000000    06000000 00000000 00000000 00000000  *................................*
04D9A0    00000000 412CC15E 18325822 00041222    4770C13A D2031004 3C045013 000407FE  *......A...........A.K...........*
04D9C0    5810C162 1211078E D203C162 100407FE    0004D968 5820C19A 5010C19A 1222078E  *..A.....K.A.......R...A...A.....*
04D9E0    50201004 50120008 07FE5810 C19A1211    078E5820 10045020 C19A1222 078ED703  *............A...........A.....P.*
04DA00    20082008 07FE0000 00000000 4120C1DE    18325822 00041222 4740C1B8 D5001000  *...............A........... A.N...*
04DA20    20004740 C1A29023 10045013 00045012    000807FE 5810C1E2 121147B0 C1D41B11  *... A.................AS....AM..*
04DA40    07FE9823 10045023 00045032 000807FE    8004DA4C 8004DA4C 0004DD1E 00084111  *................................*
04DA60    90ECD00C 05C004F0 07004110 C0100511    0F04DB04 7FFF0A0E 58B00010 9110B074  *.......0........................*

04E020    4A009BDE 40050000 47F095C6 48609BEE    8A600001 4770969E 48609C26 41660001  *.... ....0.F....................*
```

```
F.P. REGS.  00.000000 0105A5F8   00.01B668 00000000   00.000000 00017568   00.002A3A 000C0000

REGS 0-7     FFFFFF2E 0004D990 00000000 0004D97C    00014EE8 0004D944 00000008 0004D95B
REGS 8-15    00000004 0004D967 0004D968 FFFFFFFF    6F04D86E 0004D8FC 4F04D8B8 0004D9A4

000000    00000000 00000000 00000000 00000000    0004D868 00000000 FF060000 80000000  *.................Q.............*
000020    FFD50003 6F007588 FFD50001 4F04D8C4    0000FF00 00000000 FE040235 80000A1E  *.N.......N....QD................*
000040    000424A0 0C000001 000014D0 00005920    02C013A4 0000996C 00040000 00007498  *................................*
000060    00040000 00007BC8 00040000 00007588    00000000 00012D10 00040000 0000751A  *.......H......................*

04D860    00000000 00000000 90ECD00C 05C041F0    C08E50FD 00085CDF 000418DF D703D008  *...............O............P...*
04D880    D00858F0 C1EAD201 F000C022 47F0C024    07FE4150 C0D64160 00084170 C0ED4180  *...0A.K.O....O.......O..........*
04D8A0    00044190 C0F941A0 C0EE41B0 0002581A    000058F5 000005EF 46BCC050 000087A8  *.....9.............5............*
04D8C0    C0400001 1B1158F5 000405EF 12114720    C06A0002 47F0C06C 0003D707 C0FEC0FE  *. .....5.............O....P.....*
04D8E0    D707C112 C112D707 C126C126 8756C038    58DD0004 98ECD00C 07FE4300 4075D505  *P.A.A.P.A.A................. .N.*
04D90C    00059F68 00000000 47F096C0 41700005    490098CA 47709652 47F096C0 15374780  *.........O...............O......*
04D920    967A95FF 60024770 987CD505 601C8000    47809620 41303001 41808006 4B0098EA  *..........N....................*
04D940    47FC9646 0004D9A4 0004D9C0 0004D9D4    0004D9EA 0004DA0C 0004DA34 0004D968  *.O....R...R...RM..R...........R.*
04D960    0004D97C 0004D990 09000000 0004D97C    00000000 00000000 00000000 01000000  *..R...R.......R................*
04D980    0004D990 00000000 00000000 00000000    06000000 00000000 000000C0 00000000  *..R............................*
04D9A0    00000000 4120C15E 18325822 00041222    4770C13A D2031004 30045013 000407FE  *......A...........A.K...........*
04D9C0    5810C162 1211078E D203C162 100407FE    0004D968 5820C19A 5010C19A 1222078E  *..A.....K.A.......R...A...A.....*
04D9E0    50201004 50120008 07FE5810 C19A1211    078E5820 10045020 C19A1222 078ED703  *............A...........A.....P.*
04DA00    20082008 07FE0000 00000000 4120C1DE    18325822 00041222 4740C1B8 D5001000  *...............A..........  A.N...*
04DA20    20004740 C1A29023 10045013 00045012    000807FE 5810C1E2 121147B0 C1D41B11  *... A..................AS....AM..*
04DA40    07FE9823 10045023 00045032 000807FE    8004DA4C 8C04DA4C 0004DD1E 00084111  *................................*
04DA60    90ECD00C 05C004F0 07004110 C0100511    0F04DB04 7FFF0A0E 58B00010 9110B074  *.......0......................*

04E020    4AC09BDE 40050000 47F095C6 48609BEE    8A6C0001 4770969E 48609C26 41660001  *.... ....0.F...................*
```

```
F.P. REGS.  00.000000 0105A5F8   00.C1B668 00000000   00.000000 00017568   00.002A3A 00000000

REGS 0-7     FFFFFF2E 0004D968 00000000 0004D97C    00014EE8 0004D944 00000008 0004D95B
REGS 8-15    00000004 0004D967 0004D968 FFFFFFFF    6F04D86E 0004D8FC 4F04D8CC 0004D9C0

000000    00000000 00000000 00000000 00000000    0004D868 00000000 FF060000 80000000  *.................Q.............*
000020    FFD50003 6F007588 FFD50001 6F04D8DA    0000FF00 00000000 FF040234 90008626  *.N.......N....Q................*
000040    00001360 08000000 00001358 00005920    02C022A4 0000996C C00400C0 00007498  *................................*
C00060    00040000 00007BC8 00040000 00007588    00000000 00012D10 00040000 0000751A  *.......H........................*

04D860    00000000 00000000 90ECD00C 05C041F0    C08E50FD 000850DF 000418DF D7C3D008  *...............0............P...*
04D880    D00858FC C1EAD201 F000C022 47F0C024    07FE4150 C0D64160 00084170 C0ED4180  *...0A.K.0....0.......0..........*
04D8A0    00044190 C0F941A0 C0EE41B0 0002581A    000058F5 000005EF 46B0C050 000087A8  *.....9.............5............*
04D8C0    C04C0001 1B1158F5 000405EF 12114720    C06A0002 47F0C06C 0003D707 C0FEC0FE  *. .....5.............0....P.....*
04D8E0    D707C112 C112D707 C126C126 8756C038    58DD0004 98ECD00C 07FE4300 4075D505  *P.A.A.P.A.A................. .N.*
04D900    0C059F68 00000000 47F096C0 41700005    490098CA 47709652 47F096C0 15374780  *.........0...............0......*
04D920    967A95FF 60024770 987CD505 601C8000    47809620 41303001 41808006 4B0098EA  *..........N.....................*
04D940    47F09646 0004D9A4 0004D9C0 C004D9D4    0004D9EA C004DA0C 0004DA34 0004D968  *.0....R...R...RM..R...........R.*
04D960    0004D97C 0004D990 09000000 0004D97C    00000000 00000000 00000000 01000000  *..R...R.......R.................*
04D980    0004D990 00000000 00000000 00000000    06000000 00000000 00000000 00000000  *..R.............................*
04D9A0    00000000 4120C15E 18325822 00041222    4770C13A D2031004 30045013 000407FE  *......A...........A.K...........*
04D9C0    5810C162 1211078E D203C162 100407FE    0004D97C 5820C19A 5010C19A 1222078E  *..A.....K.A.......R...A...A.....*
04D9E0    50201004 50120008 07FE5810 C19A1211    078E5820 10045020 C19A1222 078ED703  *............A...........A.....P.*
04DA00    20082008 07FE0000 00000000 4120C1DE    18325822 00041222 4740C1B8 D5001000  *..............A........... A.N...*
04DA20    2000474C C1A29023 10045013 00045012    000807FE 5810C1E2 121147B0 C1D41B11  *... A..................AS....AM..*
04DA40    07FE9823 10045023 00045032 000807FE    8004DA4C 8004DA4C 0004DD1E 00084111  *................................*
04DA60    90ECD00C 05C004F0 07004110 C0100511    0F04DB04 7FFF0A0E 58B00010 9110B074  *.......0........................*

04E020    4A009BDE 40050000 47F095C6 486C9BEE    8A600001 4770969E 48609C26 41660001  *.... ....0.F....................*
```

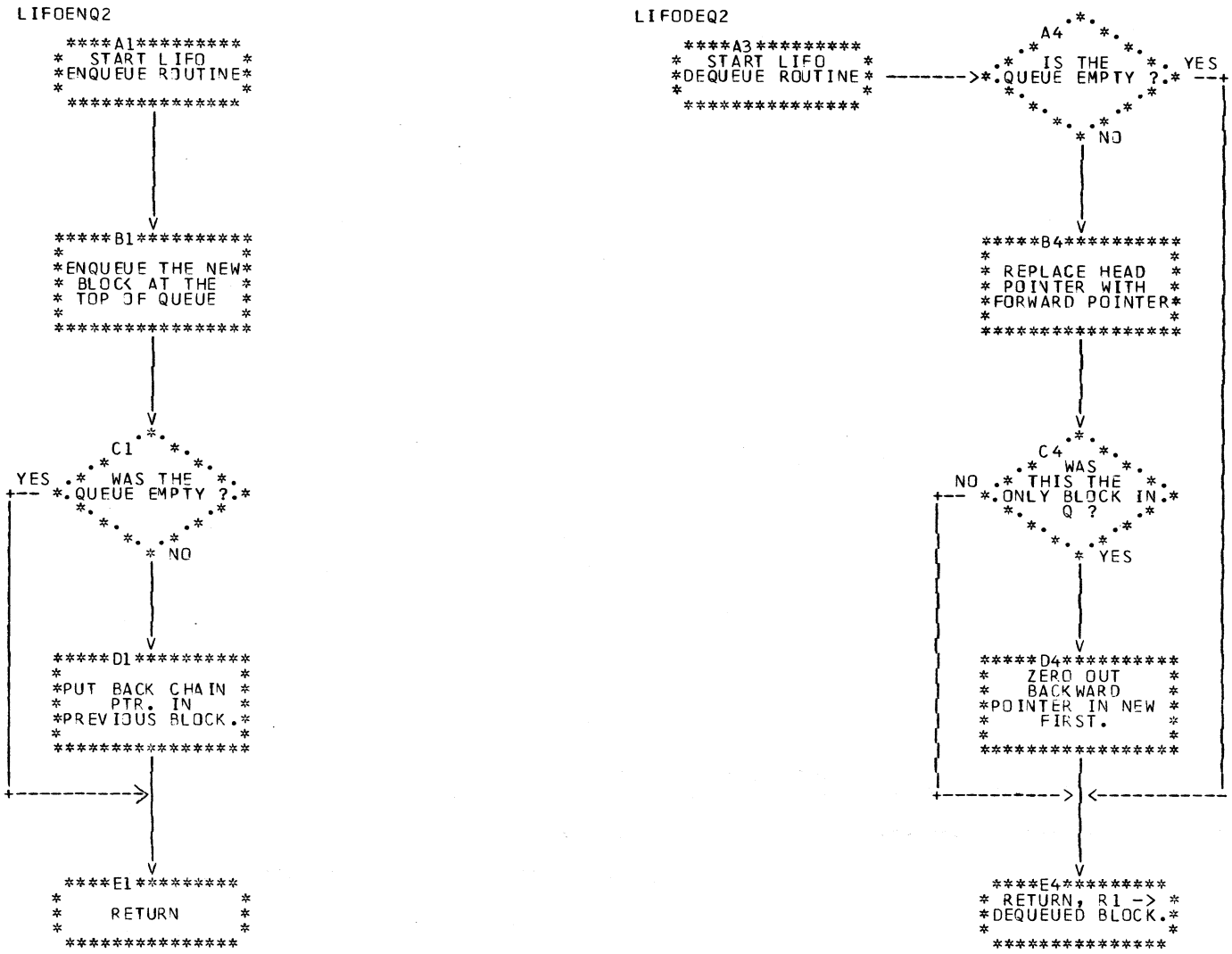
LIFOENQ2
A1
START LIFO
ENQUEUE ROUTINE
B1
ENQUEUE THE NEW
BLOCK AT THE
TOP OF QUEUE
C1
WAS THE
QUEUE EMPTY ?
YES
NO
D1
PUT BACK CHAIN
PTR. IN
PREVIOUS BLOCK.
E1
RETURN
LIFODEQ2
A3
START LIFO
DEQUEUE ROUTINE
A4
IS THE
QUEUE EMPTY ?
YES
NO
B4
REPLACE HEAD
POINTER WITH
FORWARD POINTER
C4
WAS
THIS THE
ONLY BLOCK IN
Q ?
NO
YES
D4
ZERO OUT
BACKWARD
POINTER IN NEW
FIRST.
E4
RETURN, R1 -> 
DEQUEUED BLOCK.

```
LOC  OBJECT CODE    ADDR1 ADDR2  STMT   SOURCE STATEMENT                                          F08APR70   9/17/70

                                 494 ***********************************************************************  00046900
                                 495 *                                                                      00047000
                                 496 *        THESE ROUTINES PROCESS A SINGLE HEADED, DOUBLE THREADED,      00047100
                                 497 *        LAST-IN-FIRST-OUT QUEUE.                                      00047200
                                 498 *                                                                      00047300
                                 499 ***********************************************************************  00047400


                                 501 ***********************************************************************  00047600
                                 502 *                                                                      00047700
                                 503 *        ENQUEUE SUBROUTINE.                                           00047800
                                 504 *                                                                      00047900
                                 505 *        ON ENTRY, REGISTER 1 CONTAINS THE ADDRESS OF THE ELEMENT TO   00048000
                                 506 *        BE ADDED TO THE QUEUE.                                        00048100
                                 507 *                                                                      00048200
                                 508 ***********************************************************************  00048300


000160 5820 C19A          001A0  510 LIFOENQ2 L     R2,LIFO1H2T        ADDRESS OF FIRST ON QUEUE.          00048500
000170 5010 C19A          001A0  511          ST    R1,LIFO1H2T        ADD NEW AT TOP.                     00048600
000174 1222                      512          LTR   R2,R2              WAS THE QUEUE EMPTY ?               00048700
000176 078E                      513          BCR   8,R14               YES, RETURN.                       00048800
000178 5020 1004          00004  514          ST    R2,LINKFWRD         NO, ENQUEUE THE NEW ONE.           00048900
00017C 5012 0008          00008  515          ST    R1,DISPLBWD(R2)                                        00049000
000180 07FE                      516          BR    R14                                                    00049100


                                 518 ***********************************************************************  00049300
                                 519 *                                                                      00049400
                                 520 *        DEQUEUE SUBROUTINE.                                           00049500
                                 521 *                                                                      00049600
                                 522 *        ON RETURN, REGISTER 1 WILL CONTAIN THE ADDRESS OF THE         00049700
                                 523 *        DEQUEUED ELEMENT, OR 0'S, IF THE QUEUE WAS EMPTY.             00049800
                                 524 *                                                                      00049900
                                 525 ***********************************************************************  00050000


000182 5810 C19A          001A0  527 LIFODEQ2 L     R1,LIFO1H2T        ADDRESS OF FIRST ON QUEUE.          00050200
000186 1211                      528          LTR   R1,R1              IS THE QUEUE EMPTY ?                00050300
000188 078E                      529          BCR   8,R14               YES, RETURN.                       00050400
00018A 5820 1004          00004  530          L     R2,LINKFWRD         NO, GET ADDRESS OF NEXT.           00050500
00018E 5020 C19A          001A0  531          ST    R2,LIFO1H2T         AND MAKE IT FIRST.                 00050600
000192 1222                      532          LTR   R2,R2               WAS IT THE LAST ?                  00050700
000194 078E                      533          BCR   8,R14                NO, RETURN.                       00050800
000196 D703 2008 2008 00008 00008 534          XC    DISPLBWD(4,R2),DISPLBWD(R2)                          00050900
00019C 07FE                      535          BR    R14                  YES, ZERO BACKWARD PTR AND RETURN. 00051000


00019E 0000
0001A0 00000000                  537 LIFO1H2T DC    F'0'                                                   00051200
```

```
LOC  OBJECT CODE    ADDR1 ADDR2  STMT   SOURCE STATEMENT                                        F08APR70   9/17/70
                                 539 ************************************************************************* 00051400
                                 540 *                                                                         00051500
                                 541 *        WORKSHEET FOR THE SINGLE HEADED, DOUBLE THREADED, LIFO QUEUE.    00051600
                                 542 *                                                                         00051700
                                 543 *        AFTER 'BLOCK1' AND 'BLOCK2' HAVE BEEN ENQUEUED, THE QUEUE        00051800
                                 544 *        LOOKS LIKE THIS:                                                 00051900
                                 545 *                                                                         00052000
                                 546 *        'LIFO1H2T'                                                       00052100
                                 547 *        +--------+                                                       00052200
                                 548 *        |        |                                                       00052300
                                 549 *        +--------+                                                       00052400
                                 550 *                                                                         00052500
                                 551 *                                                                         00052600
                                 552 *                                                                         00052700
                                 553 *                                                                         00052800
                                 554 *                                                                         00052900
                                 555 *                                                                         00053000
                                 556 *                                                                         00053100
                                 557 *        AFTER 'BLOCK3' HAS BEEN ENQUEUED, THE QUEUE LOOKS LIKE THIS:     00053200
                                 558 *                                                                         00053300
                                 559 *        'LIFO1H2T'                                                       00053400
                                 560 *        +--------+                                                       00053500
                                 561 *        |        |                                                       00053600
                                 562 *        +--------+                                                       00053700
                                 563 *                                                                         00053800
                                 564 *                                                                         00053900
                                 565 *                                                                         00054000
                                 566 *                                                                         00054100
                                 567 *                                                                         00054200
                                 568 *                                                                         00054300
                                 569 *                                                                         00054400
                                 570 *                                                                         00054500
                                 571 *        AFTER AN ELEMENT HAS BEEN DEQUEUED, THE QUEUE LOOKS LIKE THIS:   00054600
                                 572 *                                                                         00054700
                                 573 *        'LIFO1H2T'                                                       00054800
                                 574 *        +--------+                                                       00054900
                                 575 *        |        |                                                       00055000
                                 576 *        +--------+                                                       00055100
                                 577 *                                                                         00055200
                                 578 *                                                                         00055300
                                 579 *                                                                         00055400
                                 580 *                                                                         00055500
                                 581 *                                                                         00055600
                                 582 *                                                                         00055700
                                 583 *                                                                         00055800
                                 584 *                                                                         00055900
                                 585 *                                                                         00056000
                                 586 ************************************************************************* 00056100
```

```
F.P. REGS.  00.000000 0105A5F8   00.01B668 00000000   00.000000 00017568   00.002A3A 00000000

REGS 0-7     FFFFFF2E 0004D97C 0004D968 0004D97C    00014EE8 0004D94C 00000008 0004D95B
REGS 8-15    00000004 0004D967 0004D960 00000000    6F04D86E 0004D8FC 4F04D8B8 0004D9D4

000000    00000000 00000000 00000000 00000000    0004D868 00000000 FF060000 80000000  *.................Q.............*
000020    FFD50003 6F007588 FFD50001 6F04D8BE    0000FF00 00000000 FF060233 80000000  *.N.......N....Q................*
000040    00001360 08000000 00001358 00005920    02C031A4 0000996C 00040000 00007498  *...............................*
000060    00040000 00007BC8 00040000 00007588    00000000 00012D10 00040000 0000751A  *.......H......................*

04D860    00000000 00000000 90ECD00C 05C041F0    C08E50FD 000850DF 000418DF D703D008  *...............0............P...*
04D880    DC0858F0 C1EAD201 F000C022 47F0C024    07FE4150 C0D64160 00084170 C0ED4180  *...0A.K.0....0.......0..........*
04D8A0    00044190 C0F941A0 C0EE41B0 0002581A    000058F5 000005EF 46B0C050 000087A8  *.....9.............5...........*
04D8C0    C0400001 1B1158F5 000405EF 12114720    C06A0002 47F0C06C 0003D707 C0FEC0FE  *. .....5.............0....P.....*
04D8E0    D707C112 C112D707 C126C126 8756C038    58DD0004 98ECD00C 07FE4300 4075D505  *P.A.A.P.A.A................. .N.*
04D900    00059F68 00000000 47F096C0 41700005    490098CA 47709652 47F096C0 15374780  *.........0...............0......*
04D920    967A95FF 60024770 987CD505 601C8000    47809620 41303001 41808006 4B0098EA  *..........N....................*
04D940    47F09646 0004D9A4 0004D9C0 0004D9D4    0004D9EA 0004DA0C 0004DA34 0004D968  *.0....R...R...RM..R...........R.*
04D960    0004D97C 0004D990 09000000 00000000    0004D97C 00000000 00000000 01000000  *..R...R...........R.............*
04D980    0004D968 00000000 00000000 00000000    06000000 00000000 00000000 00000000  *..R............................*
04D9A0    00000000 4120C15E 18325822 00041222    4770C13A D2031004 30045013 000407FE  *......A...........A.K...........*
04D9C0    5810C162 1211078E D203C162 100407FE    0004D97C 5820C19A 5C10C19A 1222078E  *..A.....K.A.......R...A...A.....*
04D9E0    5C2C1004 50120008 07FE5810 C19A1211    078E5820 10045020 C19A1222 078ED703  *............A...........A.....P.*
04DA00    20082008 07FE0000 0004D97C 4120C1DE    18325822 00041222 4740C1B8 D5001000  *...........R...A........... A.N...*
04DA20    20004740 C1A29023 10045013 00045012    000807FE 5810C1E2 121147B0 C1D41B11  *... A..................AS....AM..*
04DA40    07FE9823 10045023 00045032 000807FE    80C4DA4C 8004DA4C 0004DD1E 00084111  *...............................*
04DA60    90ECD00C 05C004F0 07004110 C0100511    0F04DB04 7FFF0A0E 58B00010 9110B074  *.......0......................*

04E020    4A009BDE 40050000 47F095C6 48609BEE    8A600001 477C969E 48609C26 41660001  *.... ....0.F...................*
```

```
F.P. REGS.  00.000000 0105A5F8   00.01B668 00000000   00.000000 00017568   00.002A3A 00000000

REGS 0-7     FFFFFF2E 0004D990 0004D97C 0004D97C    00014EE8 0004D94C 00000008 0004D95B
REGS 8-15    00000004 0004D967 0004D968 FFFFFFFF    6F04D86E 0004D8FC 6F04D8B8 0004D9D4

000000    00000000 00000000 00000000 C0000000    0004D868 00000000 FF060000 80000000  *...................Q.............*
000020    FFD50003 6F007588 FFD50001 6F04D8C4    0000FF00 00000000 FF060133 80000000  *.N.......N....QD................*
000040    A0001360 08000000 A0001358 00005920    02C00EA4 0000996C 00040000 00007498  *................................*
000060    00040000 00007BC8 00040000 00007588    00000000 00012D10 00040000 0000751A  *.......H........................*

04D860    00000000 00000000 90ECD00C 05C041F0    C08E50FD 000850DF 000418DF D703D008  *...............0............P...*
04D880    D00858F0 C1EAD201 F000C022 47F0C024    07FE4150 C0D64160 00084170 C0ED4180  *...0A.K.0....0.......0..........*
04D8A0    00044190 C0F941A0 C0EE41B0 C002581A    000058F5 000005EF 46B0C050 000087A8  *.....9.............5............*
04D8C0    C0400001 1B1158F5 000405EF 12114720    C06A0002 47F0C06C 0003D7C7 C0FEC0FE  *. .....5.............0....P.....*
04D8E0    D7C7C112 C112D7C7 C126C126 8756C038    58DD0004 98ECD00C 07FE4300 4075D505  *P.A.A.P.A.A................. .N.*
04D900    00059F68 00000000 47F096C0 41700005    490098CA 47709652 47F096C0 15374780  *.........0...............0......*
04D920    967A95FF 60024770 987CD5C5 601C8000    47809620 41303001 41808006 4B0098EA  *..........N.....................*
04D940    47F09646 0004D9A4 0004D9C0 0004D9D4    0004D9EA 0004DA0C 0004DA34 0004D968  *.0....R...R...RM..R...........R.*
04D960    0004D97C 0004D990 09000000 00000000    0004D97C 00000000 00000000 01000000  *..R...R...........R.............*
04D980    0004D968 0004D990 00000000 00000000    06000000 0004D97C 00000000 00000000  *..R...R................R.........*
04D9A0    00000000 4120C15E 18325822 00041222    4770C13A D2031004 30045013 000407FE  *......A...........A.K...........*
04D9C0    5810C162 1211078E D203C162 100407FE    0004D97C 5820C19A 5010C19A 1222078E  *..A.....K.A.......R...A...A.....*
04D9E0    50201004 50120008 07FE5810 C19A1211    078E5820 10045020 C19A1222 078ED703  *............A...........A.....P.*
04DA00    20082008 07FE0000 0004D990 4120C1DE    18325822 00041222 4740C1B8 D5001000  *..........R...A..........  A.N...*
04DA20    20004740 C1A29023 10045013 00045012    000807FE 5810C1E2 121147BC C1D41B11  *... A.................AS....AM..*
04DA40    07FE9823 10045023 00045032 000807FE    8004DA4C 8004DA4C 0004DD1E 00084111  *................................*
04DA60    90ECD00C 05C004F0 07004110 C0100511    0F04DB04 7FFF0A0E 58B00010 9110B074  *.......0........................*

04E020    4A009BDE 40050000 47F095C6 48609BEE    8A600001 4770969E 48609C26 41660001  *.... ....0.F....................*
```

```
F.P. REGS.  00.000000 0105A5F8   00.01B668 00000000   00.000000 00017568   00.002A3A 00000000

REGS 0-7     FFFFFF2E 0004D990 0004D97C 0004D97C    C0014EE8 0004D94C 00000008 0004D95B
REGS 8-15    00000004 0004D967 0004D968 FFFFFFFF    6F04D86E 0004D8FC 4F04D8CC 0004D9EA

000000    00000000 00000000 00000000 00000000    0004D868 00000000 FF060000 80000000  *.................Q.............*
000020    FFD50003 6F007588 FFD50001 6F04D8DA    0000FF00 00000000 FFD5000E AF04DD16  *.N.......N....Q..........N......*
000040    00000000 04000000 00001358 00005920    083AE500 0000996C CC040000 00007498  *................V.............*
000060    00040000 00007BC8 00040000 00007588    00000000 00012D10 C0040000 0000751A  *.......H......................*

04D860    00000000 00000000 90ECD00C 05C041F0    C08E50FD 000850DF 000418DF D703D008  *...............O............P...*
04D880    D00858F0 C1EAD201 F000C022 47F0C024    07FE4150 C0D64160 00084170 C0ED4180  *...CA.K.O....O.......O.........*
04D8A0    00044190 C0F941A0 C0EE41B0 0002581A    000058F5 000005EF 46BCC050 000087A8  *.....9.............5...........*
04D8C0    C040C001 1B1158F5 000405FF 12114720    C06A0002 47F0C06C 0003D707 C0FEC0FE  *. .....5.............0....P.....*
04D8E0    D707C112 C112D707 C126C126 8756C038    58DD0004 98ECD00C 07FE4300 4075D505  *P.A.A.P.A.A................. .N.*
04D900    00C59F68 00000000 47F096C0 41700005    490098CA 47709652 47F096C0 15374780  *.........O...............O......*
04D920    967A95FF 60024770 987CD5C5 601C8000    47809620 41303001 41808006 4B0098EA  *..........N....................*
04D940    47FC9646 0004D9A4 0004D9C0 0004D9D4    0004D9EA 0004DA0C 0004DA34 0004D968  *.0....R...R...RM..R...........R.*
04D960    0004D97C 0004D990 09000000 00000000    0004D97C 00000000 00000000 01000000  *..R...R...........R.............*
04D980    0004D968 00000000 00000000 00000000    06000000 0004D97C 00000000 00000000  *..R...................R.........*
04D9A0    00000000 4120C15E 18325822 00041222    4770C13A D2031004 30045013 000407FE  *......A...........A.K...........*
04D9C0    581C0162 1211078E D203C162 100407FE    0004D97C 5820C19A 5010C19A 1222078E  *..A.....K.A.......R...A...A.....*
04D9E0    50201004 50120008 07FE5810 C19A1211    078E5820 10045020 C19A1222 078ED703  *............A...........A.....P.*
04DA00    20082006 07FE0000 0004D97C 4120C1DE    18325822 00041222 4740C1B8 D500100C  *..........R...A........... A.N...*
04DA20    20004740 C1A29023 10045013 00045012    000807FE 5810C1E2 12114780 C1D41B11  *... A..................AS....AM..*
04DA40    07FE9823 10045023 00045032 000807FE    8004DA4C 8004DA4C 0004DD1E 00084111  *................................*
04DA60    90ECD00C 05C004F0 07004110 C0100511    0F04DB04 7FFF0A0E 58800010 9110B074  *.......0......................*

04E020    4A009BDE 40050000 47F095C6 48609BEE    8A600001 477C969E 48609C26 41660001  *.... ....0.F...................*
```

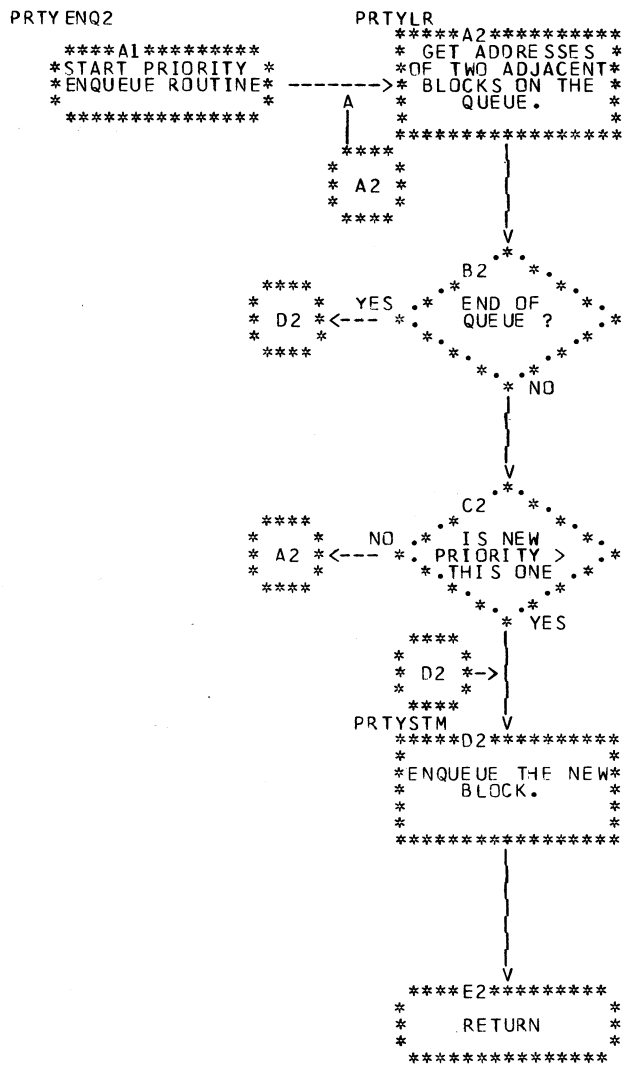
PRTYENQ2
A1
START PRIORITY
ENQUEUE ROUTINE
PRTYLR
A2
GET ADDRESSES
OF TWO ADJACENT
BLOCKS ON THE
QUEUE.
A
A2
B2
END OF
QUEUE ?
YES
D2
NO
C2
IS NEW
PRIORITY
THIS ONE
NO
A2
YES
D2
PRTYSTM
D2
ENQUEUE THE NEW
BLOCK.
E2
RETURN

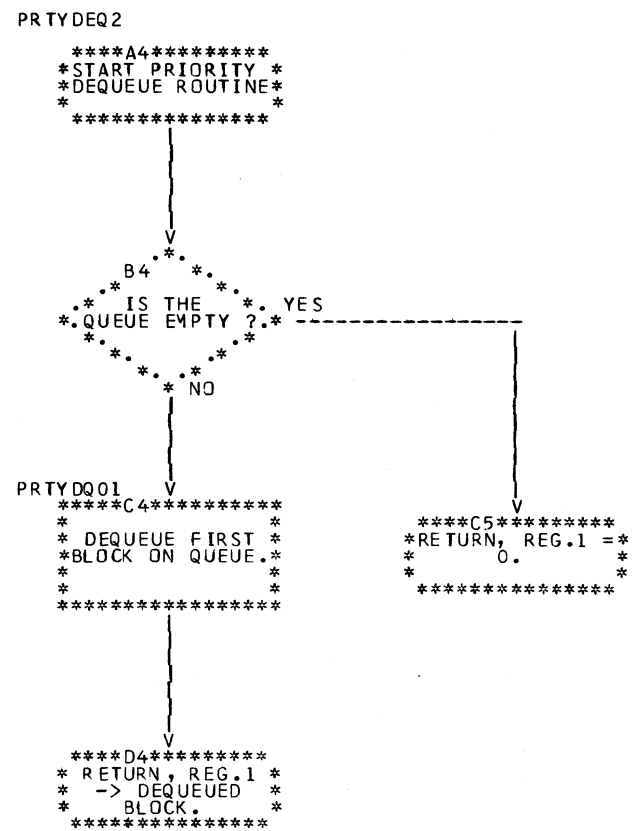
PRTYDEQ2
A4
START PRIORITY
DEQUEUE ROUTINE
B4
IS THE
QUEUE EMPTY ?
YES
NO
PRTYDQ01
C4
DEQUEUE FIRST
BLOCK ON QUEUE.
D4
RETURN, REG.1
-> DEQUEUED
BLOCK.
C5
RETURN, REG.1 =
0.

```
LOC  OBJECT CODE    ADDR1 ADDR2  STMT   SOURCE STATEMENT                                                F08APR70   9/17/70

                                 602 ***********************************************************************  00057700
                                 603 *                                                                      00057800
                                 604 *        THESE ROUTINES PROCESS A DOUBLE HEADED, DOUBLE THREADED,      00057900
                                 605 *        PRIORITY QUEUE. THE QUEUE IS ORDERED ON THE BASIS OF A        00058000
                                 606 *        1 BYTE FIELD LOCATED IN THE "PRIORITY" FIELD, AS DESCRIBED    00058100
                                 607 *        BY THE DUMMY SECTION REPRESENTING THIS Q-ELEMENT.             00058200
                                 608 *                                                                      00058300
                                 609 ***********************************************************************  00058400

                                 611 ***********************************************************************  00058600
                                 612 *                                                                      00058700
                                 613 *        ENQUEUE SUBROUTINE                                            00058800
                                 614 *                                                                      00058900
                                 615 *        ON ENTRY, REGISTER 1 ADDRESSES THE ELEMENT TO BE ADDED.       00059000
                                 616 *                                                                      00059100
                                 617 ***********************************************************************  00059200

0001A4 4120 C1DE            001E4  619 PRTYENQ2 LA    R2,PRTY2H2T-DISPLFWD  FAKE A BLOCK POINTING TO 'HEAD'.  00059400
0001A8 1832                        620 PRTYLR   LR    R3,R2                 ADDRS. OF NTH AND (N-1)TH ON Q.   00059500
0001AA 5822 0004            00004  621          L     R2,DISPLFWD(R2)                                         00059600
0001AE 1222                        622          LTR   R2,R2                 IS THIS LAST ON Q ?               00059700
0001B0 4740 C1B8            001BE  623          BM    PRTYSTM               YES, STORE THE POINTERS.          00059800
0001B4 D500 1000 2000 00000 00000  624          CLC   PRTY,0(R2)            NO, TEST FOR PRIORITY SEQUENCE.   00059900
0001BA 4740 C1A2            001A8  625          BL    PRTYLR                NOT THE RIGHT SPOT, SEARCH.       00060000
0001BE 9023 1004            00004  626 PRTYSTM  STM   R2,R3,LINKFWRD        ENQUEUE THIS ONE.                 00060100
0001C2 5013 0004            00004  627          ST    R1,DISPLFWD(R3)       BETWEEN THE RIGHT                 00060200
0001C6 5012 0008            00008  628          ST    R1,DISPLBWD(R2)        TWO ELEMENTS.                    00060300
0001CA 07FE                        629          BR    R14                   RETURN.                           00060400

                                 631 ***********************************************************************  00060600
                                 632 *                                                                      00060700
                                 633 *        DEQUEUE SUBROUTINE.                                           00060800
                                 634 *                                                                      00060900
                                 635 *        REGISTER 1 WILL CONTAIN AN ADDRESS OF DEQUEUED ELEMENT OR     00061000
                                 636 *        ZEROS ON RETURN.                                              00061100
                                 637 *                                                                      00061200
                                 638 ***********************************************************************  00061300

0001CC 5810 C1E2            001E8  640 PRTYDEQ2 L     R1,PRTY2H2T           ADDR. OF TOP OF QUEUE.            00061500
0001D0 1211                        641          LTR   R1,R1                 IS QUEUE EMPTY ?                  00061600
0001D2 47B0 C1D4            001DA  642          BNM   PRTYDQ01              NO, CONTINUE.                     00061700
0001D6 1B11                        643          SR    R1,R1                 YES, SET R1 TO ZERO.              00061800
0001D8 07FE                        644          BR    R14                   AND RETURN.                       00061900
0001DA 9823 1004            00004  645 PRTYDQ01 LM    R2,R3,LINKFWRD        GET ADDRESSES OF ELEMENTS TO      00062000
0001DE 5023 0004            00004  646          ST    R2,DISPLFWD(R3)        EITHER SIDE OF THIS ONE.         00062100
0001E2 5032 0008            00008  647          ST    R3,DISPLBWD(R2)        AND REMOVE THIS ONE FROM QUEUE.  00062200
0001E6 07FE                        648          BR    R14                   RETURN.                           00062300

0001E8                             650 PRTY2H2T DS    0F                                                      00062500
0001E8 80                          651          DC    X'80'                                                   00062600
0001E9 0001E4                      652          DC    AL3(PRTY2H2T-DISPLFWD)                                  00062700
0001EC 80                          653          DC    X'80'                                                   00062800
0001ED 0001E4                      654          DC    AL3(PRTY2H2T-DISPLFWD)                                  00062900
```

```
LOC  OBJECT CODE    ADDR1 ADDR2  STMT   SOURCE STATEMENT                                        F08APR70   9/17/70

                                 656 ***********************************************************************  00063100
                                 657 *                                                                       00063200
                                 658 *        WORKSHEET FOR THE DOUBLE HEADED, DOUBLE THREADED PRIORITY Q.   00063300
                                 659 *                                                                       00063400
                                 660 *        AFTER 'BLOCK1' AND 'BLOCK2' HAVE BEEN ENQUEUED, THE QUEUE      00063500
                                 661 *        LOOKS LIKE THIS:                                               00063600
                                 662 *                                                                       00063700
                                 663 *        'PRTY2H2T'                                                     00063800
                                 664 *        +--------+                                                     00063900
                                 665 *        |        |                                                     00064000
                                 666 *        +--------+                                                     00064100
                                 667 *        |        |                                                     00064200
                                 668 *        +--------+                                                     00064300
                                 669 *                                                                       00064400
                                 670 *                                                                       00064500
                                 671 *                                                                       00064600
                                 672 *                                                                       00064700
                                 673 *                                                                       00064800
                                 674 *                                                                       00064900
                                 675 *        AFTER 'BLOCK3' HAS BEEN ENQUEUED, THE QUEUE LOOKS LIKE THIS:   00065000
                                 676 *                                                                       00065100
                                 677 *        'PRTY2H2T'                                                     00065200
                                 678 *        +--------+                                                     00065300
                                 679 *        |        |                                                     00065400
                                 680 *        +--------+                                                     00065500
                                 681 *        |        |                                                     00065600
                                 682 *        +--------+                                                     00065700
                                 683 *                                                                       00065800
                                 684 *                                                                       00065900
                                 685 *                                                                       00066000
                                 686 *                                                                       00066100
                                 687 *                                                                       00066200
                                 688 *                                                                       00066300
                                 689 *        AFTER AN ELEMENT HAS BEEN DEUEUED, THE QUEUE LOOKS LIKE THIS:  00066400
                                 690 *                                                                       00066500
                                 691 *        'PRTY2H2T'                                                     00066600
                                 692 *        +--------+                                                     00066700
                                 693 *        |        |                                                     00066800
                                 694 *        +--------+                                                     00066900
                                 695 *        |        |                                                     00067000
                                 696 *        +--------+                                                     00067100
                                 697 *                                                                       00067200
                                 698 *                                                                       00067300
                                 699 *                                                                       00067400
                                 700 *                                                                       00067500
                                 701 *                                                                       00067600
                                 702 *                                                                       00067700
                                 703 ***********************************************************************  00067800
                                 704          END                                                            00067900
C001F0 00000000                  705                =V(PCHKRETN)
```

```
F.P. REGS.  00.000000 0105A5F8   00.01B668 000C0000   00.000000 00017568   00.002A3A 0C000000

REGS 0-7     FFFFFF2E 0004D97C 8004DA4C 0004D968    00014EE8 0004D954 C0000008 0004D95B
REGS 8-15    00000004 0004D967 0004D960 00000000    6F04D86E 0004D8FC 5F04D8B8 0004DA0C

000000    00000000 00000000 00000000 00000000    0004D868 00000000 FF060000 80000000  *.................Q.............*
000020    FFD50003 6F007588 FFD50001 5F04D8BE    0000FF00 00000000 FF060233 80000000  *.N.......N....Q..............*
000040    00001360 08000000 00001358 00005920    02C036A4 0000996C 00040000 00007498  *.............................*
000060    00040000 00007BC8 00040000 00007588    00000000 00012D10 00040000 0000751A  *.......H......................*

04D860    00000000 00000000 90ECD00C 05C041F0    C08E50FD 000850DF 000418DF D703D008  *...............0............P...*
04D880    D00858F0 C1EAD201 F000C022 47F0C024    07FE4150 C0D64160 00084170 C0ED418C  *...0A.K.0....0.......0........*
04D8A0    00044190 C0F941A0 C0EE41B0 0002581A    000058F5 000005EF 46B0C050 000087A8  *.....9.............5..........*
04D8C0    C0400001 1B1158F5 000405FF 12114720    C06A0002 47F0C06C 0003D707 C0FEC0FE  *. .....5.............0....P.....*
04D8E0    D707C112 C112D707 C126C126 8756C038    58DD0004 98ECD00C 07FE4300 4075D505  *P.A.A.P.A.A................. .N.*
04D900    00059F68 00000000 47F096C0 41700005    490098CA 47709652 47F096C0 1537478C  *.........0...............0......*
04D920    967A95FF 60024770 987CD505 601C8000    47809620 41303001 41808006 4B0098EA  *..........N....................*
04D940    47F09646 0004D9A4 0004D9C0 0004D9D4    0004D9EA 0004DA0C 0004DA34 0004D968  *.0....R...R...RM..R...........R.*
04D960    0004D97C 0004D990 09000000 0004D97C    00C4DA4C 00000000 00000000 01000000  *..R...R.......R................*
04D980    8004DA4C 0004D968 00000000 00000000    06000000 00000000 00000000 00000000  *......R........................*
04D9A0    00000000 4120C15E 18325822 00041222    4770C13A D2031004 30045013 000407FE  *......A...........A.K...........*
04D9C0    581CC162 1211078E D203C162 100407FE    0004D97C 5820C19A 5010C19A 1222078E  *..A.....K.A.......R...A...A.....*
04D9E0    50201004 50120008 07FE581C C19A1211    078E5820 10045020 C19A1222 078ED703  *............A...........A.....P.*
04DA00    20082008 07FE0000 0004D97C 4120C1DE    18325822 00041222 4740C1B8 D5001000  *..........R...A........... A.N...*
04DA20    2000474C C1A29023 10045013 00045012    00C807FE 5810C1E2 121147B0 C1D41B11  *... A..................AS....AM..*
04DA40    07FE9823 10045023 00045032 000807FE    0004D968 0004D97C 0004DD1E 00084111  *..................R...R.........*
04DA60    90ECD00C 05C004F0 070C4110 C0100511    0F04DB04 7FFF0A0E 58B00010 9110B074  *.......C......................*

04E020    4A009BDE 40050000 47F095C6 48609BEE    8A600001 4770969E 48609C26 41660001  *.... ....0.F...................*
```

```
F.P. REGS.  00.000000 0105A5F8   00.01B668 00000000   00.000000 00017568   00.002A3A 00000000

REGS 0-7     FFFFFF2E 0004D990 0004D97C 0004D968    00014EE8 0004D954 00000008 0004D95B
REGS 8-15    00000004 0004D967 0004D968 FFFFFFFF    6F04D86E 0004D8FC 5F04D8B8 0004DA0C

000000    00000000 00000000 00000000 00000000    0004D868 00000000 FF060000 80000000  *.................Q.............*
000020    FFA50001 4007EA2C FFD50001 6F04D8C4    0000FF00 00000000 FE040133 80000A06  *.... ....N....QD................*
000040    0006AE40 0C000000 A0001468 00005920    02C040A4 0000996C 00040000 00007498  *... ............. .............*
000060    00040000 00007BC8 00040000 00007588    000C0000 00012D10 00040000 0000751A  *.......H........................*

04D860    00000000 00000000 90ECD00C 05C041F0    C08E5CFD 000850DF 000418DF D703D008  *...............O............P...*
04D880    D00858F0 C1EAD201 F000C022 47F0C024    07FE4150 C0D64160 00084170 C0ED4180  *...0A.K.O....O.......O..........*
04D8A0    00044190 C0F941A0 C0EE41B0 C002581A    000058F5 000005EF 46BCCC50 000087A8  *.....9.............5............*
04D8C0    C0400001 1B1158F5 000405EF 12114720    C06A0002 47F0C06C 0003D707 C0FEC0FE  *. .....5.............0....P.....*
04D8E0    D707C112 C112D707 C126C126 8756C038    58DD0004 98ECD00C C7FE4300 4075D505  *P.A.A.P.A.A................. .N.*
04D900    00C59F68 00000000 47F096C0 41700005    490C98CA 47709652 47F096C0 15374780  *.........O...............O......*
04D920    967A95FF 60024770 987CD505 601C8000    478C9620 41303001 41808006 4B0098EA  *..........N.....................*
04D940    47F09646 0004D9A4 0004D9C0 0004D9D4    0004D9EA 0004DA0C 0004DA34 0004D968  *.O....R...R...RM..R...........R.*
04D960    0004D97C 0004D990 09000000 0004D990    0004DA4C 00000000 00000000 01000000  *..R...R.......R.................*
04D980    8004DA4C 0004D990 00000000 00000000    06000000 0004D97C 0004D968 00000000  *......R...............R...R.....*
04D9A0    00000000 4120C15E 18325822 C0041222    4770C13A D2031004 30045013 0C0407FE  *......A...........A.K...........*
04D9C0    581CC162 1211078E D203C162 100407FE    0004D97C 5820C19A 5010C19A 1222078E  *..A.....K.A.......R...A...A.....*
04D9E0    50201004 50120008 07FE5810 C19A1211    078E5820 1004502C C19A1222 078ED703  *............A...........A.....P.*
04DA00    20082008 07FE0000 0004D97C 4120C1DE    18325822 00041222 4740C1B8 D5001000  *...........R...A........... A.N...*
04DA20    20004740 C1A29023 10045013 00045012    00C807FE 5810C1E2 121147B0 C1D41B11  *... A.................AS....AM..*
04DA40    07FE9823 10045023 00045C32 000807FE    0004D968 0004D97C 0004DD1E C0084111  *..................R...R.........*
04DA60    90ECD00C 05C004F0 07C04110 C0100511    0FC4DB04 7FFF0A0E 58B0001C 9110B074  *.......O........................*

04E020    4A0C9BDE 40050000 47F095C6 48609BEE    8A600001 4770969E 48609C26 41660001  *.... ....0.F....................*
```

```
F.P. REGS.  00.000000 0105A5F8   00.01B668 00000000   00.000000 00017568   00.002A3A 00000000

REGS 0-7     FFFFFF2E 0004D968 0004D990 0004DA4C    00014EE8 C004D954 00000008 0004D95B
REGS 8-15    00000004 0004D967 0004D968 FFFFFFFF    6F04D86E 0004D8FC 4F04D8CC 0004DA34

000000    00000000 00000000 00000000 00000000    0004D868 00000000 FF060000 80000000  *.................Q............*
000020    FFD50003 6F007588 FFD50001 6F04D8DA    0000FF00 00000000 FF040233 8000A90C  *.N.......N....Q................*
000040    00001360 08000000 00001358 00005920    02C027A4 0000996C 00040000 00007498  *...............................*
000060    00040000 00007BC8 00040000 00007588    00000000 00012D10 00040000 0000751A  *.......H......................*

04D860    00000000 00000000 90ECD00C 05C041F0    C08E50FD 000850DF 000418DF D703D008  *...............0............P...*
04D880    D00858F0 C1EAD201 F000C022 47F0C024    07FE4150 C0D64160 00084170 C0ED4180  *...0A.K.0....0.......0..........*
04D8A0    0004419C C0F941A0 C0EE41B0 0002581A    000058F5 000005EF 46B0C050 000087A8  *.....9.............5...........*
04D8C0    C0400001 1B1158F5 000405EF 12114720    C06A0002 47F0C06C 0003D707 C0FEC0FE  *. .....5.............0....P.....*
04D8E0    D707C112 C112D707 C126C126 8756C038    58DD0004 98ECD00C 07FE4300 4075D505  *P.A.A.P.A.A................. .N.*
04D900    00059F68 000C0000 47F096C0 41700005    490098CA 47709652 47F096C0 15374780  *.........0...............0......*
04D920    967A95FF 60024770 987CD505 601C8000    47809620 41303001 41808006 4B0098EA  *..........N...................*
04D940    47F09646 0004D9A4 0004D9C0 0004D9D4    0004D9EA C004DA0C 0004DA34 0004D968  *.0....R...R...RM..R...........R.*
04D960    0004D97C 0004D990 09000000 0004D990    0004DA4C 00000000 00000000 01000000  *..R...R.......R................*
04D980    8004DA4C 0004D990 00000000 00000000    06000000 0004D97C 0004DA4C 00000000  *......R...............R.........*
04D9A0    00000000 4120C15E 18325822 00041222    4770C13A D2031004 30045013 000407FE  *......A...........A.K...........*
04D9C0    581CC162 1211078E D203C162 100407FE    0004D97C 5820C19A 5010C19A 1222078E  *..A.....K.A.......R...A...A.....*
04D9E0    5C201004 50120008 07FE5810 C19A1211    C78E5820 10045020 C19A1222 078ED703  *............A...........A.....P.*
04DA00    20082008 C7FE0000 0004D97C 4120C1DE    18325822 00041222 4740C1B8 D5001000  *..........R...A.......... A.N...*
04DA20    20004740 C1A29023 10045013 00045012    000807FE 5810C1E2 121147B0 C1D41B11  *... A.................AS....AM..*
04DA40    07FE9823 10045023 00045032 000807FE    0004D990 0004D97C 0004DD1E 00084111  *...................R...R.........*
04DA60    90ECD00C 05C004F0 07004110 C0100511    0F04DB04 7FFF0A0E 58B00010 9110B074  *.......0......................*

04E020    4A009BDE 40050000 47F095C6 48609BEE    8A600001 4770969E 48609C26 41660001  *.... ....0.F..................*
```



**********

9/17/70

| POS.ID | REL.ID | FLAGS | ADDRESS |
|---|---|---|---|
| 01 | 01 | 0C | 0000DC |
| 01 | 01 | 0C | 0000E0 |
| 01 | 01 | 0C | 0000E4 |
| 01 | 01 | 0C | 0000E8 |
| 01 | 01 | 0C | 0000EC |
| 01 | 01 | 0C | 0000F0 |
| 01 | 01 | 0C | 0000F4 |
| 01 | 01 | 0C | 0000F8 |
| 01 | 01 | 0C | 0000FC |
| 01 | 01 | C8 | 0001E9 |
| 01 | 01 | C8 | 0001ED |
| 01 | 02 | 1C | 0001F0 |

9/17/70

| SYMBOL | LEN | VALUE | DEFN | REFERENCES | | | | | | | | | | | | | | |
|---|---|---|---|---|---|---|---|---|---|---|---|---|---|---|---|---|---|---|
| BEGIN | 00004 | 00002A | 00056 | 0031 | | | | | | | | | | | | | | |
| BLOCK1 | 00001 | 000100 | 00092 | 0060 | 0078 | 0078 | 0091 | | | | | | | | | | | |
| BLOCK2 | 00001 | 000114 | 00095 | 0079 | 0079 | 0091 | | | | | | | | | | | | |
| BLOCK3 | 00001 | 000128 | 00098 | 0080 | 0080 | 0091 | | | | | | | | | | | | |
| BR14 | 00002 | 000028 | 00032 | 0030 | | | | | | | | | | | | | | |
| DISPLBWD | 00004 | 000008 | 00109 | 0515 | 0534 | 0534 | 0628 | 0647 | | | | | | | | | | |
| DISPLFWD | 00004 | 000004 | 00108 | 0404 | 0406 | 0409 | 0410 | 0619 | 0621 | 0627 | 0646 | 0652 | 0654 | | | | | |
| DUMPIT | 00002 | 000070 | 00077 | 0074 | 0076 | | | | | | | | | | | | | |
| FENQ2 | 00002 | 000140 | 00405 | 0408 | | | | | | | | | | | | | | |
| FIFODEQ1 | 00004 | 000158 | 00423 | 0087 | | | | | | | | | | | | | | |
| FIFOENQ1 | 00004 | 00013C | 00404 | 0087 | | | | | | | | | | | | | | |
| FIFO1H1T | 00004 | 000168 | 00429 | 0404 | 0423 | 0426 | | | | | | | | | | | | |
| LIFODEQ2 | 00004 | 000182 | 00527 | 0088 | | | | | | | | | | | | | | |
| LIFOENQ2 | 00004 | 00016C | 00510 | 0088 | | | | | | | | | | | | | | |
| LIFO1H2T | 00004 | 0001A0 | 00537 | 0510 | 0511 | 0527 | 0531 | | | | | | | | | | | |
| LINKBKWD | 00004 | 000008 | 00106 | 0109 | | | | | | | | | | | | | | |
| LINKFWRD | 00004 | 000004 | 00105 | 0108 | 0409 | 0426 | 0514 | 0530 | 0626 | 0645 | | | | | | | | |
| NODUMP | 00004 | 000056 | 00068 | 0066 | | | | | | | | | | | | | | |
| PRTY | 00001 | 000000 | 00103 | 0624 | | | | | | | | | | | | | | |
| PRTYDEQ2 | 00004 | 0001CC | 00640 | 0089 | | | | | | | | | | | | | | |
| PRTYDQ01 | 00004 | C001DA | 00645 | 0642 | | | | | | | | | | | | | | |
| PRTYENQ2 | 00004 | 0001A4 | 00619 | 0089 | | | | | | | | | | | | | | |
| PRTYLR | 00002 | 0001A8 | 00620 | 0625 | | | | | | | | | | | | | | |
| PRTYSTM | 00004 | 0001BE | 00626 | 0623 | | | | | | | | | | | | | | |
| PRTY2H2T | 00004 | 0001E8 | 00650 | 0619 | 0640 | 0652 | 0654 | | | | | | | | | | | |
| QELEMENT | 00001 | 000000 | 00102 | 0108 | 0109 | 0403 | | | | | | | | | | | | |
| QELEMNTS | 00004 | 0000F4 | 00091 | 0058 | 0061 | | | | | | | | | | | | | |
| QENTER | 00004 | 000046 | 00063 | 0068 | | | | | | | | | | | | | | |
| QUEUESUP | 00001 | 000000 | 00001 | 0111 | | | | | | | | | | | | | | |
| QUINGLST | 00004 | 0000DC | 00087 | C056 | | | | | | | | | | | | | | |
| RETURN | 00004 | 000088 | 00082 | | | | | | | | | | | | | | | |
| R0 | 00001 | 000000 | 00003 | | | | | | | | | | | | | | | |
| R1 | 00001 | 000001 | 00004 | 0063 | 0070 | 0070 | 0073 | 0073 | 0403 | 0410 | 0423 | 0424 | 0424 | 0511 | 0515 | 0527 | 0528 | 0528 |
| | | | | 0627 | 0628 | 0640 | 0641 | 0641 | 0643 | 0643 | | | | | | | | |
| R10 | 00001 | 00000A | 00013 | 0061 | 0063 | 0068 | | | | | | | | | | | | |
| R11 | 00001 | 00000B | 00014 | 0062 | 0066 | | | | | | | | | | | | | |
| R12 | 00001 | 00000C | 00015 | 0019 | 0020 | 0021 | 0083 | | | | | | | | | | | |
| R13 | 00001 | 00000D | 00016 | 0019 | 0023 | 0024 | 0025 | 0026 | 0026 | 0082 | 0082 | 0083 | | | | | | |
| R14 | 00001 | 00000E | 00017 | 0019 | 0032 | 0065 | 0072 | 0083 | 0084 | 0411 | 0425 | 0427 | 0513 | 0516 | 0529 | 0533 | 0535 | 0629 |
| | | | | 0644 | 0648 | | | | | | | | | | | | | |
| R15 | 00001 | 00000F | 00018 | 0022 | 0023 | 0024 | 0025 | 0029 | 0030 | 0064 | 0065 | 0071 | 0072 | | | | | |
| R2 | 00001 | 000002 | 00005 | 0404 | 0405 | 0406 | 0406 | 0407 | 0407 | 0510 | 0512 | 0512 | 0514 | 0515 | 0530 | 0531 | 0532 | 0532 |
| | | | | 0534 | 0534 | 0619 | 0620 | 0621 | 0621 | 0622 | 0622 | 0624 | 0626 | 0628 | 0645 | 0646 | 0647 | |
| R3 | 00001 | 000003 | 00006 | 0405 | 0409 | 0410 | 0620 | 0626 | 0627 | 0645 | 0646 | 0647 | | | | | | |
| R4 | 00001 | 000004 | 00007 | | | | | | | | | | | | | | | |
| R5 | 00001 | 000005 | 00008 | 0056 | 0064 | 0071 | 0081 | | | | | | | | | | | |
| R6 | 00001 | 000006 | 00009 | 0057 | 0081 | | | | | | | | | | | | | |
| R7 | 00001 | 000007 | 00010 | 0058 | | | | | | | | | | | | | | |
| R8 | 00001 | 000008 | 00011 | 0059 | 0068 | | | | | | | | | | | | | |
| R9 | 00001 | 000009 | 00012 | 0060 | | | | | | | | | | | | | | |
| SAVEAREA | 00004 | 000094 | 00086 | 0022 | | | | | | | | | | | | | | |
| TESTLOOP | 00004 | C0003E | 00061 | 0081 | | | | | | | | | | | | | | |

```
STMT  ERROR CODE   MESSAGE                                                                    9/17/70

NO STATEMENTS FLAGGED IN THIS ASSEMBLY
*STATISTICS*     SOURCE RECORDS (SYSIN) =    679      SOURCE RECORDS (SYSLIB) =     25
*OPTIONS IN EFFECT*   LIST, NODECK, LOAD, NORENT, XREF, NOTEST, ALGN, OS, LINECNT =   55
  779 PRINTED LINES
```

```
F44-LEVEL LINKAGE EDITOR OPTIONS SPECIFIED MAP,LET,LIST,NCAL
          VARIABLE OPTIONS USED -  SIZE=(45056,6144)-          DEFAULT OPTION(S) USED
IEW0000             ENTRY UTILITY


                                                  MODULE MAP


 CONTROL SECTION                        ENTRY

   NAME     ORIGIN  LENGTH                NAME   LOCATION     NAME   LOCATION     NAME   LOCATION     NAME   LOCATION

 QUEUESUP       00     1F4
 UTILITY       1F8     5A0
                                        PRINT        25A    PCHKRETN     4B6

 ENTRY ADDRESS       1F8
 TOTAL LENGTH        798

****GO        DOES NOT EXIST BUT HAS BEEN ADDED TO DATA SET
```

```
 QQQQQQQQQQ   UU         UU  EEEEEEEEEEEE  UU         UU  EEEEEEEEEEEE  TTTTTTTTTTTT   AAAAAAAAAA         11
QQQQQQQQQQQQ  UU         UU  EEEEEEEEEEEE  UU         UU  EEEEEEEEEEEE  TTTTTTTTTTTT  AAAAAAAAAAAA       111
QQ        QQ  UU         UU  EE            UU         UU  EE                TT       AA        AA      1111
QQ        QQ  UU         UU  EE            UU         UU  EE                TT       AA        AA        11
QQ        QQ  UU         UU  EE            UU         UU  EE                TT       AA        AA        11
QQ        QQ  UU         UU  EEEEEEEE      UU         UU  EEEEEEEE          TT       AAAAAAAAAAAA        11
QQ        QQ  UU         UU  EEEEEEEE      UU         UU  EEEEEEEE          TT       AAAAAAAAAAAA        11
QQ    QQ  QQ  UU         UU  EE            UU         UU  EE                TT       AA        AA        11
QQ     QQ QQ  UU         UU  EE            UU         UU  EE                TT       AA        AA        11
QQ      QQQQ  UU         UU  EE            UU         UU  EE                TT       AA        AA        11
QQQQQQQQQQQQ   UUUUUUUUUUUUU  EEEEEEEEEEEE  UUUUUUUUUUUUU  EEEEEEEEEEEE       TT       AA        AA   1111111111
 QQQQQQQQ QQ    UUUUUUUUUUU   EEEEEEEEEEEE   UUUUUUUUUUU   EEEEEEEEEEEE       TT       AA        AA   1111111111
```

```
 9999999999
999999999999
99        99
99        99
99        99
999999999999
999999999999
          99
          99
99        99
999999999999
 9999999999
```



**********

| SYMBOL | TYPE | ID | ADDR | LENGTH | LD ID |
|---|---|---|---|---|---|
| QUEUETA1 | SD | 01 | 000000 | 00013C | |

```
 LOC  OBJECT CODE    ADDR1 ADDR2  STMT   SOURCE STATEMENT                                                F08APR70   9/17/70

000000                                1 QUEUETA1 CSECT                                                          00000100
                                      2          COPY  MHMBEGIN                                                 00000200
000000                                3 R0       EQU   0                                                        00000700
000001                                4 R1       EQU   1                                                        00000800
000002                                5 R2       EQU   2                                                        00000900
000003                                6 R3       EQU   3                                                        00001000
000004                                7 R4       EQU   4                                                        00001100
000005                                8 R5       EQU   5                                                        00001200
000006                                9 R6       EQU   6                                                        00001300
000007                               10 R7       EQU   7                                                        00001400
000008                               11 R8       EQU   8                                                        00001500
000009                               12 R9       EQU   9                                                        00001600
00000A                               13 R10      EQU   10                                                       00001700
00000B                               14 R11      EQU   11                                                       00001800
00000C                               15 R12      EQU   12                                                       00001900
00000D                               16 R13      EQU   13                                                       00002000
00000E                               17 R14      EQU   14                                                       00002100
00000F                               18 R15      EQU   15                                                       00002200
000000 90EC D00C            0000C    19          STM   R14,R12,12(R13)     SAVE THE CALLER'S REGISTERS          00002400
000004 05C0                          20          BALR  R12,0               ESTABLISH PROGRAM BASE               00002500
000006                               21          USING *,R12               LET THE ASSEMBLER KNOW.              00002600
000006 41F0 C0DE            000E4    22          LA    R15,SAVEAREA        ADDRESS OF MY SAVE AREA              00002700
00000A 50FD 0008            00008    23          ST    R15,8(R13)          BACKWARD CHAIN                       00002800
00000E 50DF 0004            00004    24          ST    R13,4(R15)          FORWARD CHAIN                        00002900
000012 18DF                          25          LR    R13,R15             ESTABLISH MY SAVE AREA               00003000
000014 D703 D008 D008 00008 00008    26          XC    8(4,R13),8(R13)     TERMINATE THE FORWARD CHAIN          00003100
                                     27 *        END OF STANDARD ENTRY LINKAGE CONVENTIONS.                     00003200
```

```
LOC  OBJECT CODE    ADDR1 ADDR2  STMT   SOURCE STATEMENT                                        F08APR70   9/17/70

                                  29 *                        ******************************************   00000400
                                  30 *                        * QUEUE PROCESSING TROUBLE ANALYSIS BUG 1. *   00000500
                                  31 *                        * ----- ---------- ------- -------- --- -- *   00000600
                                  32 *                        ******************************************   00000700


                                  34 ***********************************************************************  00000900
                                  35 *                                                                      00001000
                                  36 *        THIS ROUTINE IS DESIGNED TO PROCESS A DOUBLE HEADED, SINGLE   00001100
                                  37 *        THREADED, FIFO QUEUE. THE ENQUEUE ROUTINE WILL ENQUEUE THE    00001200
                                  38 *        BLOCK WHOSE ADDRESS IS PASSED IN REGISTER ONE TO THE BOTTOM   00001300
                                  39 *        OF THE QUEUE. THE DEQUEUE ROUTINE WILL DEQUEUE THE BLOCK AT   00001400
                                  40 *        THE TOP OF THE LIST AND RETURN IT'S ADDRESS IN REGISTER 1,    00001500
                                  41 *        UNLESS THE QUEUE WAS EMPTY, IN WHICH CASE, A NEGATIVE VALUE   00001600
                                  42 *        WILL BE RETURNED IN REGISTER 1.                               00001700
                                  43 *                                                                      00001800
                                  44 ***********************************************************************  00001900


                                  46 ***********************************************************************  00002100
                                  47 *                                                                      00002200
                                  48 *        FOR SOME REASON OR OTHER, THE PROGRAM DOESN'T SEEM TO BE      00002300
                                  49 *        WORKING. YOU ARE TO FIND OUT WHERE THE FAILURE IS BEING       00002400
                                  50 *        CAUSED AND TO SUGGEST A CODING CHANGE THAT WILL CAUSE THE     00002500
                                  51 *        PROGRAM TO WORK IN THE MANNER INTENDED. TO SIMPLIFY YOUR      00002600
                                  52 *        TASK, READ THE PROLOGUE OF THE TEST CASE ROUTINE, SO THAT     00002700
                                  53 *        YOU WILL UNDERSTAND THE SEQUENCE OF EVENTS TAKING PLACE.      00002800
                                  54 *                                                                      00002900
                                  55 *        GOOD LUCK....                                                 00003000
                                  56 *                                                                      00003100
                                  57 ***********************************************************************  00003200
```

```
LOC   OBJECT CODE    ADDR1 ADDR2  STMT   SOURCE STATEMENT                                        F08APR70   9/17/70

                                   59 *                          ************************************        00003400
                                   60 *                          * TEST CASE CODE FOR THE FIFO QUEUE. *        00003500
                                   61 *                          * ---- ---- ---- --- --- ---- ------ *        00003600
                                   62 *                          ************************************        00003700


                                   64 ************************************************************************* 00003900
                                   65 *                                                                         00004000
                                   66 *         THIS ROUTINE CONTROLS THE OPERATIONS TAKING PLACE ON THE        00004100
                                   67 *         FIFO QUEUE. IT WILL ENQUEUE ONE BLOCK, DEQUEUE IT,              00004200
                                   68 *         ENQUEUE THREE MORE, THEN DEQUEUE ONE. IF ALL GOES WELL,         00004300
                                   69 *         A DUMP WILL BE TAKEN AT LOCATION 'GOODENUF'. ANY OTHER          00004400
                                   70 *         DUMP INDICATES AN ERROR OF SOME TYPE HAS OCCURRED. IF THE       00004500
                                   71 *         DUMP AT 'GOODENUF' DOES OCCUR, CHECK THE CONTENTS OF THE        00004600
                                   72 *         QUEUE FOR CORRECT ORDER, THAT SHOULD NOT HAPPEN.....            00004700
                                   73 *         REMEMBER, THIS IS A TROUBLE ANALYSIS PROBLEM...........         00004800
                                   74 *                                                                         00004900
                                   75 ************************************************************************* 00005000

00001A 4140 C05E            00064  77           LA    R4,BLOCK1          ADDR OF FIRST BLOCK.                 00005200
00001E 9857 C12A            00130  78           LM    R5,R7,=A(OPLIST,4,OPLSTND-1)                            00005300
000022 1814                        79 TESTLOOP LR    R1,R4              ADDR. OF BLOCK TO BE ENQUEUED.       00005400
000024 58F5 0000            00000  80           L     R15,0(R5)          ADDR. OF ENQ/DEQ ROUTINE.            00005500
000028 05EF                        81           BALR  R14,R15            LINK TO THE ROUTINE.                 00005600
00002A 1211                        82           LTR   R1,R1              DEQUEUE TEST. DID I GET A BLOCK BACK? 00005700
00002C 47D0 C03E            00044  83           BNP   TOOBAD              NO, ABORT.                          00005800
000030 4144 000C            0000C  84           LA    R4,12(R4)          ADDR. OF NEXT BLOCK                  00005900
000034 8756 C01C            00022  85           BXLE  R5,R6,TESTLOOP     REPEAT TO END OF LIST.                00006000
000038 0000                        86 GOODENUF DC    H'0'                                                      00006100
00003A 58DD 0004            00004  87           L     R13,4(R13)                                              00006200
00003E 98EC D00C            0000C  88           LM    R14,R12,12(R13)                                         00006300
000042 07FE                        89           BR    R14                                                     00006400

000044 0001                        91 TOOBAD   DC    H'1'                                                      00006600
000046 47F0 C034            0003A  92           B     GOODENUF+2                                              00006700


00004A 0000
00004C 000000A000000C0BC           94 OPLIST   DC    A(ENQ,DEQ,ENQ,ENQ,ENQ,DEQ)                              00006900
000064                             95 OPLSTND  EQU   *                                                       00007000
000064 0000000000000000            96 BLOCK1   DC    3F'0'                                                   00007100
000070                             97           DS    3F                 FAKE BLOCK FOR DEQUEUE.              00007200
00007C 0000000000000000            98 BLOCK2   DC    3F'0'                                                   00007300
000088 0000000000000000            99 BLOCK3   DC    3F'0'                                                   00007400
000094 0000000000000000           100 BLOCK4   DC    3F'0'                                                   00007500
```

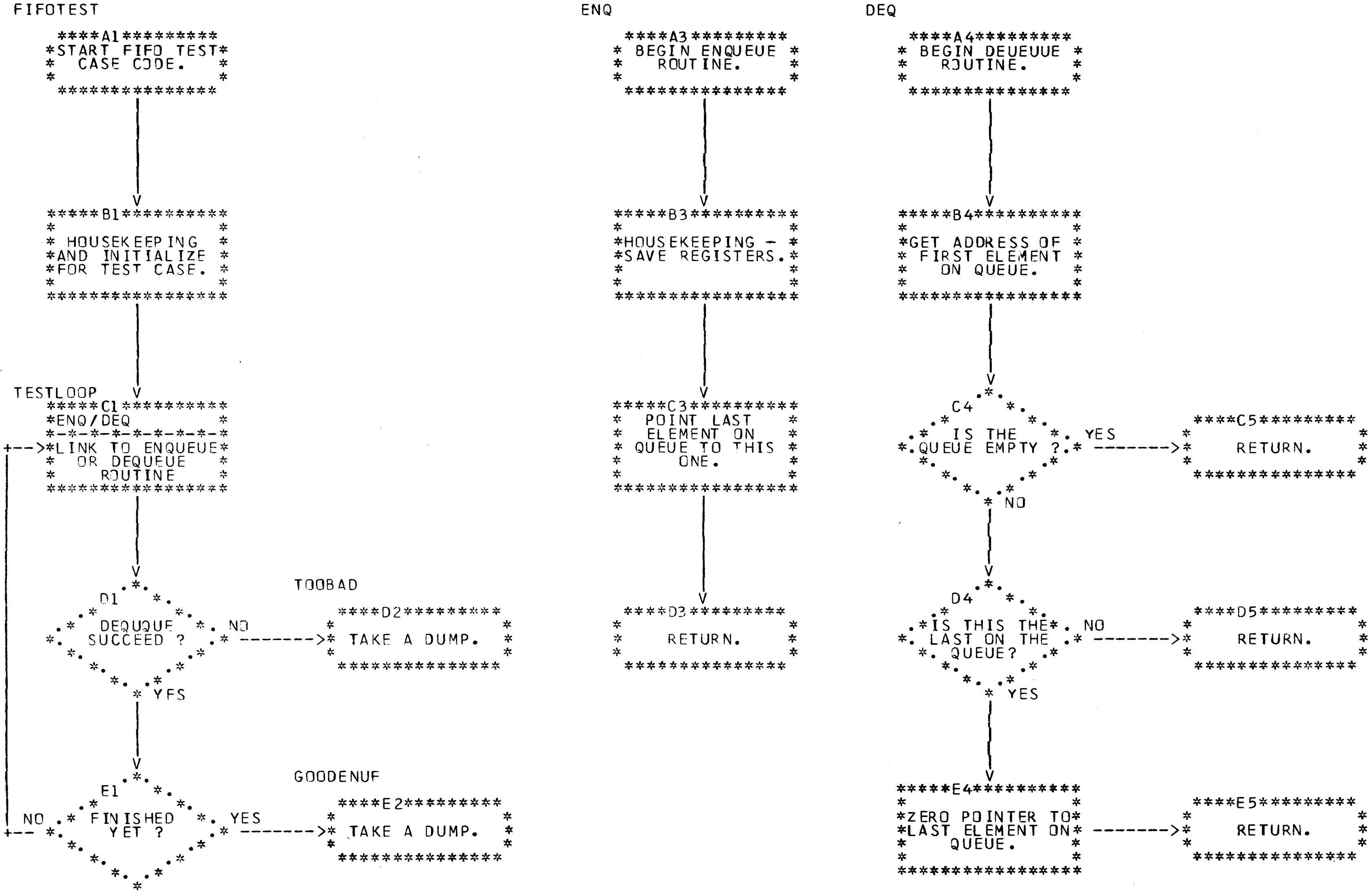
FIFOTEST
A1
START FIFO TEST CASE CODE.
B1
HOUSEKEEPING AND INITIALIZE FOR TEST CASE.
TESTLOOP
C1
ENQ/DEQ
LINK TO ENQUEUE OR DEQUEUE ROUTINE
D1
DEQUQUE SUCCEED ?
NO
YES
TOOBAD
D2
TAKE A DUMP.
E1
FINISHED YET ?
NO
YES
GOODENUF
E2
TAKE A DUMP.
ENQ
A3
BEGIN ENQUEUE ROUTINE.
B3
HOUSEKEEPING - SAVE REGISTERS.
C3
POINT LAST ELEMENT ON QUEUE TO THIS ONE.
D3
RETURN.
DEQ
A4
BEGIN DEUEUUE ROUTINE.
B4
GET ADDRESS OF FIRST ELEMENT ON QUEUE.
C4
IS THE QUEUE EMPTY ?
YES
NO
C5
RETURN.
D4
IS THIS THE LAST ON THE QUEUE?
NO
YES
D5
RETURN.
E4
ZERO POINTER TO LAST ELEMENT ON QUEUE.
E5
RETURN.

```
 LOC  OBJECT CODE    ADDR1 ADDR2  STMT   SOURCE STATEMENT                                          F08APR70   9/17/70

                                  125 ***********************************************************************  00010000
                                  126 *                                                                        00010100
                                  127 *        ENQUEUE ROUTINE.                                                00010200
                                  128 *                                                                        00010300
                                  129 *        WILL ENQUEUE ON THE BOTTOM OF THE QUEUE ANY BLOCK WHOSE         00010400
                                  130 *        ADDRESS IS PASSED IT IN REGISTER ONE.                           00010500
                                  131 *                                                                        00010600
                                  132 ***********************************************************************  00010700
000000                            133          USING BLOCK,R1                                                  00010800

0000A0 5020 C0DA            000E0 135 ENQ      ST    R2,TEMPSAVE        SAVE REGISTER TO BE USED.            00011000
0000A4 5820 C0D6            000DC 136          L     R2,QUEUEPTR+4      ADDR. OF BOTTOM OF QUEUE.            00011100
0000A8 D203 1000 2000 00000 00000 137          MVC   LINKFLD,0(R2)      ENQUEUE THIS ONE AT THE BOTTOM.      00011200
0000AE 5012 0000            00000 138          ST    R1,0(R2)           ADD LINK FIELD.                      00011300
0000B2 5010 C0D6            000DC 139          ST    R1,QUEUEPTR+4      MAKE THE NEW ONE LAST IN QUEUE.      00011400
0000B6 5820 C0DA            000E0 140          L     R2,TEMPSAVE        RESTORE REGISTER USED.               00011500
0000BA 07FE                       141          BCR   15,R14             RETURN.                              00011600

                                  143 ***********************************************************************  00011800
                                  144 *                                                                        00011900
                                  145 *        DEQUEUE ROUTINE.                                                00012000
                                  146 *                                                                        00012100
                                  147 *        WILL RETURN IN REGISTER 1 THE ADDRESS OF THE BLOCK THAT         00012200
                                  148 *        WAS AT THE TOP OF THE QUEUE. A NEGATIVE VALUE IS RETURNED       00012300
                                  149 *        IF THE QUEUE IS EMPTY ON ENTRY.                                 00012400
                                  150 *                                                                        00012500
                                  151 ***********************************************************************  00012600
0000BC 5810 C0D2            000D8 152 DEQ      L     R1,QUEUEPTR        ADDR. OF FIRST BLOCK ON THE QUEUE.   00012700
0000C0 1211                       153          LTR   R1,R1              IS THE QUEUE EMPTY ?                 00012800
0000C2 074E                       154          BCR   4,R14               YES, RETURN.                        00012900
0000C4 5510 C0D6            000DC 155          CL    R1,QUEUEPTR+4       NO, IS THIS THE LAST ONE ON Q ?     00013000
0000C8 D203 C0D2 1000 000D8 00000 156          MVC   QUEUEPTR,LINKFLD     DEQUEUE FIRST FROM TOP.            00013100
0000CE 07CE                       157          BCR   12,R14               NO, RETURN.                        00013200
0000D0 D203 C0D6 1000 000DC 00000 158          MVC   QUEUEPTR+4,LINKFLD   YES, RE-INITIALIZE THE EMPTY QUEUE. 00013300
0000D6 07FE                       159          BCR   15,R14                AND RETURN.                        00013400

0000D8                            161 QUEUEPTR DS    0F                                                      00013600
0000D8 FF                         162          DC    X'FF'                                                   00013700
0000D9 0000D8                     163          DC    AL3(QUEUEPTR)                                           00013800
0000DC FF                         164          DC    X'FF'                                                   00013900
0000DD 0000D8                     165          DC    AL3(QUEUEPTR)                                           00014000
0000E0                            166 TEMPSAVE DS    F                                                       00014100
0000E4                            167 SAVEAREA DS    18F                                                     00014200

000000                            169 BLOCK    DSECT                                                         00014400
000000                            170 LINKFLD  DS    F                                                       00014500
000004                            171 PADDING  DS    2F                                                      00014600
                                  172          END                                                           00014700
000130 0000004C00000004           173                =A(OPLIST,4,OPLSTND-1)
```

9/17/70

| POS.ID | REL.ID | FLAGS | ADDRESS |
|---|---|---|---|
| 01 | 01 | 0C | 00004C |
| 01 | 01 | 0C | 000050 |
| 01 | 01 | 0C | 000054 |
| 01 | 01 | 0C | 000058 |
| 01 | 01 | 0C | 00005C |
| 01 | 01 | 0C | 000060 |
| 01 | 01 | 08 | 0000D9 |
| 01 | 01 | 08 | 0000DD |
| 01 | 01 | 0C | 000130 |
| 01 | 01 | 0C | 000138 |

9/17/70

| SYMBOL | LEN | VALUE | DEFN | REFERENCES | | | | | | | | | |
|---|---|---|---|---|---|---|---|---|---|---|---|---|---|
| BLOCK | 00001 | 000000 | 00169 | 0133 | | | | | | | | | |
| BLOCK1 | 00004 | 000064 | 00096 | 0077 | | | | | | | | | |
| BLOCK2 | 00004 | 00007C | 00098 | | | | | | | | | | |
| BLOCK3 | 00004 | 000088 | 00099 | | | | | | | | | | |
| BLOCK4 | 00004 | 000094 | 00100 | | | | | | | | | | |
| DEQ | 00004 | 0000BC | 00152 | 0094 | 0094 | | | | | | | | |
| ENQ | 00004 | 0000A0 | 00135 | 0094 | 0094 | 0094 | 0094 | | | | | | |
| GOODENUF | 00002 | 000038 | 00086 | 0092 | | | | | | | | | |
| LINKFLD | 00004 | 000000 | 00170 | 0137 | 0156 | 0158 | | | | | | | |
| OPLIST | 00004 | 00004C | 00094 | 0078 | 0173 | | | | | | | | |
| OPLSTND | 00001 | 000064 | 00095 | 0078 | 0173 | | | | | | | | |
| PADDING | 00004 | 000004 | 00171 | | | | | | | | | | |
| QUEUEPTR | 00004 | 0000D8 | 00161 | 0136 | 0139 | 0152 | 0155 | 0156 | 0158 | 0163 | 0165 | | |
| QUEUETA1 | 00001 | 000000 | 00001 | | | | | | | | | | |
| R0 | 00001 | 000000 | 00003 | | | | | | | | | | |
| R1 | 00001 | 000001 | 00004 | 0079 | 0082 | 0082 | 0133 | 0138 | 0139 | 0152 | 0153 | 0153 | 0155 |
| R10 | 00001 | 00000A | 00013 | | | | | | | | | | |
| R11 | 00001 | 00000B | 00014 | | | | | | | | | | |
| R12 | 00001 | 00000C | 00015 | 0019 | 0020 | 0021 | 0088 | | | | | | |
| R13 | 00001 | 00000D | 00016 | 0019 | 0023 | 0024 | 0025 | 0026 | 0026 | 0087 | 0087 | 0088 | |
| R14 | 00001 | 00000E | 00017 | 0019 | 0081 | 0088 | 0089 | 0141 | 0154 | 0157 | 0159 | | |
| R15 | 00001 | 00000F | 00018 | 0022 | 0023 | 0024 | 0025 | 0080 | 0081 | | | | |
| R2 | 00001 | 000002 | 00005 | 0135 | 0136 | 0137 | 0138 | 0140 | | | | | |
| R3 | 00001 | 000003 | 00006 | | | | | | | | | | |
| R4 | 00001 | 000004 | 00007 | 0077 | 0079 | 0084 | 0084 | | | | | | |
| R5 | 00001 | 000005 | 00008 | 0078 | 0080 | 0085 | | | | | | | |
| R6 | 00001 | 000006 | 00009 | 0085 | | | | | | | | | |
| R7 | 00001 | 000007 | 00010 | 0078 | | | | | | | | | |
| R8 | 00001 | 000008 | 00011 | | | | | | | | | | |
| R9 | 00001 | 000009 | 00012 | | | | | | | | | | |
| SAVEAREA | 00004 | 0000E4 | 00167 | 0022 | | | | | | | | | |
| TEMPSAVE | 00004 | 0000E0 | 00166 | 0135 | 0140 | | | | | | | | |
| TESTLOOP | 00002 | 000022 | 00079 | 0085 | | | | | | | | | |
| TOOBAD | 00002 | 000044 | 00091 | 0083 | | | | | | | | | |

NO STATEMENTS FLAGGED IN THIS ASSEMBLY
*STATISTICS* SOURCE RECORDS (SYSIN) = 147 SOURCE RECORDS (SYSLIB) = 25
*OPTIONS IN EFFECT* LIST, NODECK, LOAD, NORENT, XREF, NOTEST, ALGN, OS, LINECNT = 55
229 PRINTED LINES

```
F44-LEVEL LINKAGE EDITOR OPTIONS SPECIFIED MAP,LET,LIST,NCAL
          VARIABLE OPTIONS USED -  SIZE=(45056,6144)-          DEFAULT OPTION(S) USED
IEW0000             ENTRY UTILITY


                                                MODULE MAP


 CONTROL SECTION                        ENTRY

   NAME     ORIGIN  LENGTH                NAME   LOCATION     NAME   LOCATION     NAME   LOCATION     NAME   LOCATION

 QUEUETA1       00      13C
 UTILITY       140      5A0
                                        PRINT        1A2    PCHKRETN     3FE

 ENTRY ADDRESS       140
 TOTAL LENGTH        6E0

****GO        DOES NOT EXIST BUT HAS BEEN ADDED TO DATA SET
```

```
F.P. REGS.  40.F0F5F5 F2404000   00.000000 00000000   00.000000 00000000   00.000000 00000000

REGS 0-7     FFFFFF2E FF01D9F8 0001AEFC 00000000    0001D9C0 0001D980 00000004 0001D983
REGS 8-15    0001AEE0 00000000 0001AF08 00000000    6F01D926 0001DA04 6F01D94A 0001D9DC

000000    00000000 00000000 00000000 00000000    0001D920 00000000 FF060000 80000000  *.................R.............*
000020    00040003 50006A3E FFC50001 5F01D966    0000FF00 00000000 FFC50231 8F01DA78  *.........E....R.........E......*
000040    B0041EF8 0C000000 B00014D0 00005920    02BFAFA4 0000996C C0040000 00007498  *...8............................*
000060    00040000 00007BC8 00040000 00007588    00000000 00012D10 00040000 0000751A  *.......H........................*

01D920    90ECD00C 05C041F0 C0DE50FD 000850DF    000418DF D703D008 D0084140 C05E9857  *.......0............P...... ....*
01D940    C12A1814 58F50000 05EF1211 47D0C03E    4144000C 8756C01C 000058DD 000498EC  *A....5..........................*
01D960    D00C07FE 000147F0 C0340000 0001D9C0    0001D9DC 0001D9C0 0001D9C0 0001D9C0  *.......0......R...R...R...R...R.*
01D980    0001D9DC 0001D99C 00000000 00000000    16021702 5000D232 07FE90BD 0001D9A8  *..R...R...............K.......R.*
01D9A0    00000000 00000000 0001D9B4 00000000    00000000 FF01D9F8 00000000 00000000  *..........R...........R8........*
01D9C0    5020C0DA 582CC0D6 D2031000 20005012    00005010 C0D65820 C0DA07FE 5810C0D2  *.......OK............O........K*
01D9E0    1211074E 5510C0D6 D203C0D2 100007CE    D203C0D6 100007FE FF01D9F8 0001D9B4  *.......OK..K....K..O......R8..R.*
01DA00    0001AEFC 98BDE020 00029F68 00000000    CFFA48A0 D2825880 C5D640A8 000047F0  *....................K...E0 ....0*
01DA20    B20EC700 50038FFA 0003C3BE 0003D3BE    D7C40C70 0070D202 0075D60E 47F0B20E  *..........C...L.P.....K...O..O..*
01DA40    D2030048 C5724550 C27AD203 0048C576    0001D96C 00000004 0001D983 41300007  *K...E...B.K...E...R.......R.....*
01DA60    90ECD00C 05C004F0 07004110 C0100511    0FC1DB04 7FFF0A0E 58B00010 9110B074  *.......0........................*

01E020    4A009BDE 40050000 47F095C6 48609BEE    8A600001 4770969E 48609C26 41660001  *.... ....0.F....................*
```



**********

```
 QQQQQQQQQQ   UU         UU  EEEEEEEEEEEE  UU         UU  EEEEEEEEEEEE  TTTTTTTTTTTT   AAAAAAAAAA    2222222222
QQQQQQQQQQQQ  UU         UU  EEEEEEEEEEEE  UU         UU  EEEEEEEEEEEE  TTTTTTTTTTTT  AAAAAAAAAAAA  222222222222
QQ        QQ  UU         UU  EE            UU         UU  EE                TT        AA        AA  22        22
QQ        QQ  UU         UU  EE            UU         UU  EE                TT        AA        AA            22
QQ        QQ  UU         UU  EE            UU         UU  EE                TT        AA        AA            22
QQ        QQ  UU         UU  EEEEEEEE      UU         UU  EEEEEEEE          TT        AAAAAAAAAAAA           22
QQ        QQ  UU         UU  EEEEEEEE      UU         UU  EEEEEEEE          TT        AAAAAAAAAAAA         22
QQ    QQ  QQ  UU         UU  EE            UU         UU  EE                TT        AA        AA       22
QQ     QQ QQ  UU         UU  EE            UU         UU  EE                TT        AA        AA     22
QQ      QQQQ  UU         UU  EE            UU         UU  EE                TT        AA        AA   22
QQQQQQQQQQQQ   UUUUUUUUUUUUU  EEEEEEEEEEEE  UUUUUUUUUUUUU  EEEEEEEEEEEE      TT        AA        AA  222222222222
 QQQQQQQQ QQ    UUUUUUUUUUU   EEEEEEEEEEEE   UUUUUUUUUUU   EEEEEEEEEEEE      TT        AA        AA  222222222222
```

```
 9999999999
999999999999
99        99
99        99
99        99
999999999999
999999999999
          99
          99
99        99
999999999999
 999999999
```



**********

EXTERNAL SYMBOL DICTIONARY

| SYMBOL | TYPE | ID | ADDR | LENGTH | LD ID |
|---|---|---|---|---|---|
| QUEUETA2 | SD | 01 | 000000 | 000174 | |

```
 LOC  OBJECT CODE    ADDR1 ADDR2  STMT   SOURCE STATEMENT                                                F08APR70   9/17/70

000000                                 1 QUEUETA2 CSECT                                                          00000100
                                       2          COPY  MHMBEGIN                                                 00000200
000000                                 3 R0       EQU   0                                                        00000700
000001                                 4 R1       EQU   1                                                        00000800
000002                                 5 R2       EQU   2                                                        00000900
000003                                 6 R3       EQU   3                                                        00001000
000004                                 7 R4       EQU   4                                                        00001100
000005                                 8 R5       EQU   5                                                        00001200
000006                                 9 R6       EQU   6                                                        00001300
000007                                10 R7       EQU   7                                                        00001400
000008                                11 R8       EQU   8                                                        00001500
000009                                12 R9       EQU   9                                                        00001600
00000A                                13 R10      EQU   10                                                       00001700
00000B                                14 R11      EQU   11                                                       00001800
00000C                                15 R12      EQU   12                                                       00001900
00000D                                16 R13      EQU   13                                                       00002000
00000E                                17 R14      EQU   14                                                       00002100
00000F                                18 R15      EQU   15                                                       00002200
000000 90EC D00C            0000C     19         STM   R14,R12,12(R13)     SAVE THE CALLER'S REGISTERS          00002400
000004 05C0                           20         BALR  R12,0               ESTABLISH PROGRAM BASE               00002500
000006                                21         USING *,R12               LET THE ASSEMBLER KNOW.              00002600
000006 41F0 C11A            00120     22         LA    R15,SAVEAREA        ADDRESS OF MY SAVE AREA              00002700
00000A 50FD C008            00008     23         ST    R15,8(R13)          BACKWARD CHAIN                       00002800
00000E 50DF 0004            00004     24         ST    R13,4(R15)          FORWARD CHAIN                        00002900
000012 18DF                           25         LR    R13,R15             ESTABLISH MY SAVE AREA               00003000
000014 D703 D008 D008 00008 00008     26         XC    8(4,R13),8(R13)     TERMINATE THE FORWARD CHAIN          00003100
                                      27 *       END OF STANDARD ENTRY LINKAGE CONVENTIONS.                     00003200
```

```
LOC  OBJECT CODE    ADDR1 ADDR2  STMT   SOURCE STATEMENT                                    F08APR70   9/17/70

                                  29 *                          ************************************    00000400
                                  30 *                          * QUEUE PROCESSING T/A BUG NUMBER 2. *    00000500
                                  31 *                          * ----- ---------- --- --- ------ -- *    00000600
                                  32 *                          ************************************    00000700


                                  34 ********************************************************************** 00000900
                                  35 *                                                                      00001000
                                  36 *        THIS ROUTINE IS DESIGNED TO PROCESS A SINGLE HEADED, SINGLE   00001100
                                  37 *        THREADED, LIFO QUEUE. THE ENQUEUE ROUTINE WILL ENQUEUE THE    00001200
                                  38 *        BLOCK WHOSE ADDRESS IS PASSED IN REGISTER ONE TO THE TOP OF   00001300
                                  39 *        THE QUEUE. THE DEQUEUE ROUTINE WILL DEQUEUE THE BLOCK AT      00001400
                                  40 *        THE TOP OF THE QUEUE, AND RETURN IT'S ADDRESS IN REGISTER     00001500
                                  41 *        ONE. IF THE QUEUE IS EMPTY, REGISTER ONE WILL CONTAIN ZEROS   00001600
                                  42 *        ON RETURN.                                                    00001700
                                  43 *                                                                      00001800
                                  44 ********************************************************************** 00001900


                                  46 ********************************************************************** 00002100
                                  47 *                                                                      00002200
                                  48 *        IT LOOKS LIKE THE PROGRAM IS ACTING UP TODAY. YOU ARE         00002300
                                  49 *        REQUESTED TO FIND OUT WHERE THE FAILURE IS OCCURRING          00002400
                                  50 *        AND TO MAKE THE CODING CHANGE(S) THAT WILL MAKE IT            00002500
                                  51 *        WORK AGAIN. TO MAKE YOUR TASK EASIER, READ THE PROLOGUE       00002600
                                  52 *        OF THE TEST-CASE ROUTINE BEFORE YOU START TO SHOOT THE        00002700
                                  53 *        TROUBLE. THIS WILL INFORM YOU OF YOUR CONSTITUTIONAL          00002800
                                  54 *        RIGHTS AND ALSO TELL YOU WHAT IS EXPECTED OF THE PROGRAM.     00002900
                                  55 *                                                                      00003000
                                  56 *        HAVE FUN........                                              00003100
                                  57 *                                                                      00003200
                                  58 ********************************************************************** 00003300
```

```
LOC   OBJECT CODE    ADDR1 ADDR2  STMT   SOURCE STATEMENT                                        F08APR70   9/17/70

                                   60 *                        ************************************         00003500
                                   61 *                        * TEST CASE CODE FOR THE LIFO QUEUE. *         00003600
                                   62 *                        * ---- ---- ---- --- --- ---- ------ *         00003700
                                   63 *                        ************************************         00003800


                                   65 ********************************************************************** 00004000
                                   66 *                                                                      00004100
                                   67 *        THIS ROUTINE CONTROLS THE SEQUENCE OF EVENTS THAT WILL        00004200
                                   68 *        TAKE PLACE WITH THE LIFO QUEUE. IT WILL ENQUEUE TWO BLOCKS,   00004300
                                   69 *        DEQUEUE ONE, ENQUEUE ONE MORE AND THEN DEQUEUE THE REMAINING  00004400
                                   70 *        TWO. IF ALL GOES WELL, A DUMP WILL BE TAKEN AT LOCATION       00004500
                                   71 *        'GOESWELL'. IF A DUMP OCCURS ANYWHERE ELSE, THIS IS AN        00004600
                                   72 *        INDICATION OF ERROR.                                          00004700
                                   73 *                                                                      00004800
                                   74 *******  NOTE:                                                         00004900
                                   75 *        IF THE DUMP AT 'GOESWELL' DOES OCCUR, EXAMINE THE STATUS OF   00005000
                                   76 *        THE QUEUE. THIS IS A TROUBLE ANALYSIS PROBLEM, SO SOMETHING   00005100
                                   77 *        MUST BE WRONG. RIGHT ?????                                    00005200
                                   78 *                                                                      00005300
                                   79 ********************************************************************** 00005400

00001A 4140 C066            0006C  81 LIFOTEST LA    R4,BLOCK1           ADDR. OF FIRST BLOCK                00005600
00001E 9857 C162            00168  82          LM    R5,R7,=A(OPLIST,4,OPLSTND-1)                            00005700
000022 1814                        83 TESTLOOP LR    R1,R4               ADDR. OF BLOCK TO BE ENQUEUED.      00005800
000024 58F5 0000            00000  84          L     R15,0(R5)           ADDR. OF ENQ/DEQ ROUTINE.           00005900
000028 05EF                        85          BALR  R14,R15             LINK TO THE ROUTINE.                00006000
00002A 1211                        86          LTR   R1,R1               DID I GET A BLOCK BACK ?            00006100
00002C 4780 C032            00038  87          BZ    TESTLAST             NO, TEST FOR LAST OPERATION.       00006200
000030 4144 0020            00020  88          LA    R4,BLOCK2-BLOCK1(R4) YES, ADDR. OF NEXT BLOCK.           00006300
000034 8756 C01C            00022  89          BXLE  R5,R6,TESTLOOP        REPEAT TO END OF LIST.              00006400
000038 4100 C062            00068  90 TESTLAST LA    R0,OPLSTND-4        LAST OPERATION ?                    00006500
00003C 1905                        91          CR    R0,R5                                                   00006600
00003E 4770 C048            0004E  92          BNE   ABORT                NO, ERROR.                         00006700
000042 0000                        93 GOESWELL DC    H'0'                 YES, TAKE A DUMP.                   00006800
000044 58DD 0004            00004  94          L     R13,4(R13)                                               00006900
000048 98EC D00C            0000C  95          LM    R14,R12,12(R13)                                          00007000
00004C 07FE                        96          BR    R14                                                      00007100

00004E 0001                        98 ABORT    DC    H'1'                                                     00007300
000050 47F0 C03E            00044  99          B     GOESWELL+2                                               00007400


000054 000000EC000000EC           101 OPLIST   DC    A(ENQ,ENQ,DEQ,ENQ,DEQ,DEQ)                               00007600
00006C                            102 OPLSTND  EQU   *                                                        00007700
00006C 0000000000000000           103 BLOCK1   DC    8F'0'                                                    00007800
00008C 0000000000000000           104 BLOCK2   DC    8F'0'                                                    00007900
0000AC                            105          DS    8F                  DUMMY BLOCK FOR DEQ.                00008000
0000CC 0000000000000000           106 BLOCK3   DC    8F'0'                                                    00008100
```

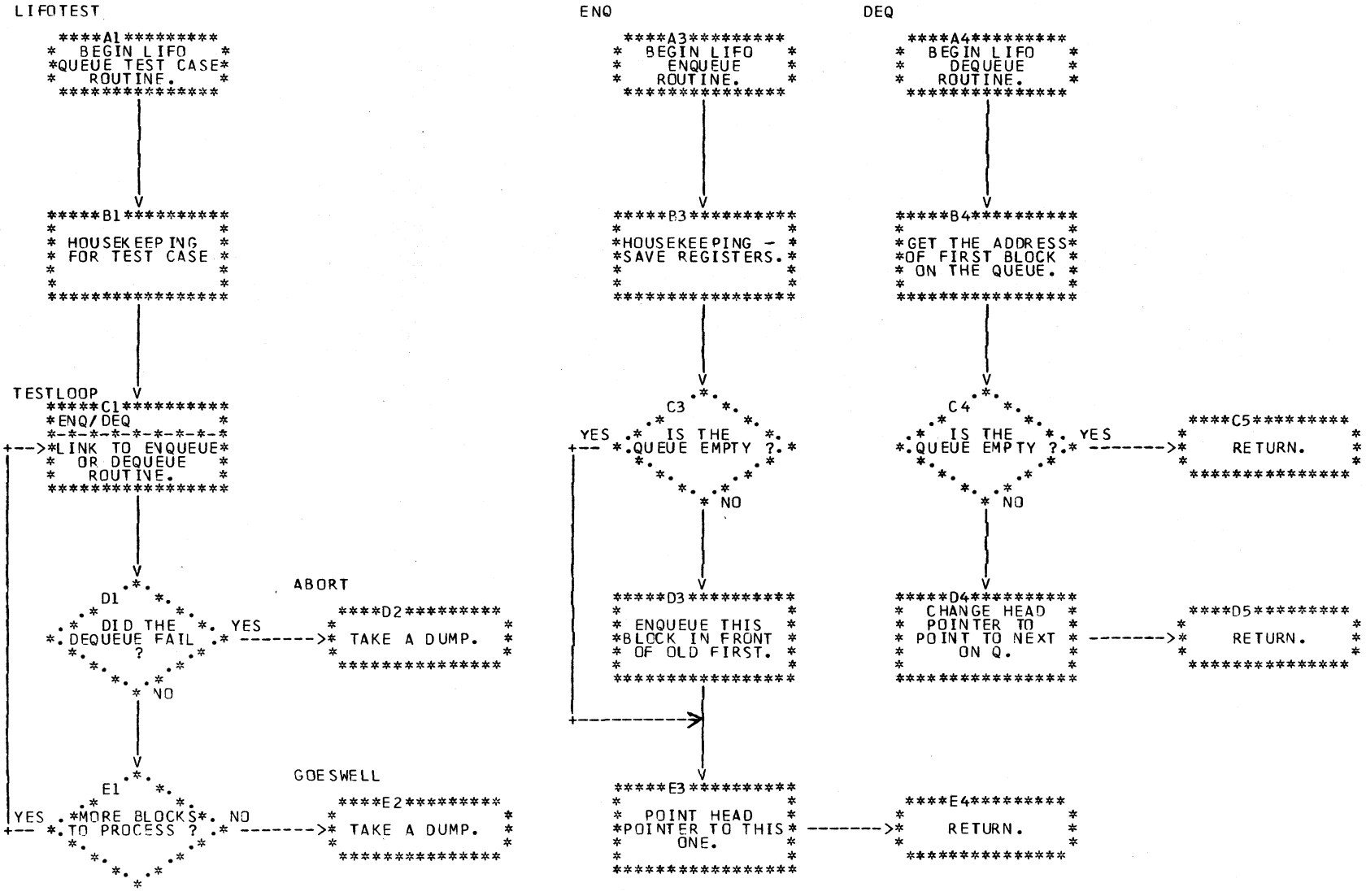
LIFOTEST
A1
BEGIN LIFO QUEUE TEST CASE ROUTINE.
B1
HOUSEKEEPING FOR TEST CASE
TESTLOOP
C1
ENQ/DEQ
LINK TO ENQUEUE OR DEQUEUE ROUTINE.
D1
DID THE DEQUEUE FAIL ?
YES
NO
ABORT
D2
TAKE A DUMP.
E1
MORE BLOCKS TO PROCESS ?
YES
NO
GOESWELL
E2
TAKE A DUMP.
ENQ
A3
BEGIN LIFO ENQUEUE ROUTINE.
B3
HOUSEKEEPING - SAVE REGISTERS.
C3
IS THE QUEUE EMPTY ?
YES
NO
D3
ENQUEUE THIS BLOCK IN FRONT OF OLD FIRST.
E3
POINT HEAD POINTER TO THIS ONE.
DEQ
A4
BEGIN LIFO DEQUEUE ROUTINE.
B4
GET THE ADDRESS OF FIRST BLOCK ON THE QUEUE.
C4
IS THE QUEUE EMPTY ?
YES
NO
C5
RETURN.
D4
CHANGE HEAD POINTER TO POINT TO NEXT ON Q.
D5
RETURN.
E4
RETURN.

```
 LOC  OBJECT CODE    ADDR1 ADDR2  STMT   SOURCE STATEMENT                                    F08APR70   9/17/70

                                  130 ***********************************************************************  00010500
                                  131 *                                                                        00010600
                                  132 *         ENQUEUE ROUTINE.                                               00010700
                                  133 *                                                                        00010800
                                  134 *         WILL ENQUEUE ON THE TOP OF THE QUEUE ANY BLOCK WHOSE ADDRESS   00010900
                                  135 *         IS PASSED IN REGISTER ONE.                                     00011000
                                  136 *                                                                        00011100
                                  137 ***********************************************************************  00011200

000000                            139           USING BLOCK,R1                                                 00011400
0000EC 5020 C116          0011C   140 ENQ       ST    R2,TEMPSAVE        SAVE CALLER'S REGISTER.             00011500
0000F0 5820 C112          00118   141           L     R2,QUEUEPTR        ADDR. OF FIRST ON THE QUEUE.        00011600
0000F4 1222                       142           LTR   R2,R2              QUEUE EMPTY ?                       00011700
0000F6 4740 C0F8          000FE   143           BM    ADDIT               YES, ENQUEUE THIS AS FIRST.        00011800
0000FA 5020 1010          00010   144           ST    R2,LINKFLD          NO, ENQUEUE THIS IN FRONT OF FIRST. 00011900
0000FE 5010 C112          00118   145 ADDIT     ST    R1,QUEUEPTR        POINT TO IT WITH QUEUE HEAD.        00012000
000102 5820 C116          0011C   146           L     R2,TEMPSAVE        RESTORE USER'S REGISTER.            00012100
000106 07FE                       147           BR    R14                 RETURN.                            00012200

                                  149 ***********************************************************************  00012400
                                  150 *                                                                        00012500
                                  151 *         DEQUEUE ROUTINE.                                               00012600
                                  152 *                                                                        00012700
                                  153 *         DEQUEUES THE TOP BLOCK FROM THE QUEUE AND RETURNS IT'S         00012800
                                  154 *         ADDRESS IN REGISTER ONE. REGISTER ONE WILL CONTAIN             00012900
                                  155 *         ZEROS IF THE QUEUE WAS EMPTY ON ENTRY.                         00013000
                                  156 *                                                                        00013100
                                  157 ***********************************************************************  00013200

000108                            159 DEQ       EQU   *                                                        00013400
000108 581C C112          00118   160           L     R1,QUEUEPTR        ADDR. OF FIRST ON QUEUE.            00013500
00010C 1211                       161           LTR   R1,R1              QUEUE EMPTY ?                       00013600
00010E 078E                       162           BCR   8,R14               YES, RETURN.                       00013700
000110 D203 C112 1010 00118 00010 163           MVC   QUEUEPTR,LINKFLD    NO, DEQUEUE THE ONE AT TOP.        00013800
000116 07FE                       164           BR    R14                 AND RETURN.                        00013900

000118 0C000000                   166 QUEUEPTR  DC    F'0'                                                   00014100
00011C                            167 TEMPSAVE  DS    F                                                      00014200
000120                            168 SAVEAREA  DS    18F                                                    00014300

000000                            170 BLOCK     DSECT                                                        00014500
000000                            171           DS    4F                                                     00014600
000010                            172 LINKFLD   DS    F                                                      00014700
000014                            173           DS    3F                                                     00014800
000010                            174 LINKDISP  EQU   LINKFLD-BLOCK                                          00014900
                                  175           END                                                          00015000
000168 0000005400000004           176                 =A(OPLIST,4,OPLSTND-1)
```

9/17/70

| POS.ID | REL.ID | FLAGS | ADDRESS |
|---|---|---|---|
| 01 | 01 | 0C | 000054 |
| 01 | 01 | 0C | 000058 |
| 01 | 01 | 0C | 00005C |
| 01 | 01 | 0C | 000060 |
| 01 | 01 | 0C | 000064 |
| 01 | 01 | 0C | 000068 |
| 01 | 01 | 0C | 000168 |
| 01 | 01 | 0C | 000170 |

9/17/70

| SYMBOL | LEN | VALUE | DEFN | REFERENCES | | | | | | | | |
|---|---|---|---|---|---|---|---|---|---|---|---|---|
| ABORT | 00002 | 00004E | 00098 | 0092 | | | | | | | | |
| ADDIT | 00004 | 0000FE | 00145 | 0143 | | | | | | | | |
| BLOCK | 00001 | 000000 | 00170 | 0139 | 0174 | | | | | | | |
| BLOCK1 | 00004 | 00006C | 00103 | 0081 | 0088 | | | | | | | |
| BLOCK2 | 00004 | 00008C | 00104 | 0088 | | | | | | | | |
| BLOCK3 | 00004 | 0000CC | 00106 | | | | | | | | | |
| DEQ | 00001 | 000108 | 00159 | 0101 | 0101 | 0101 | | | | | | |
| ENQ | 00004 | 0000EC | 00140 | 0101 | 0101 | 0101 | | | | | | |
| GOESWELL | 00002 | 000042 | 00093 | 0099 | | | | | | | | |
| LIFOTEST | 00004 | 00001A | 00081 | | | | | | | | | |
| LINKDISP | 00004 | 000010 | 00174 | | | | | | | | | |
| LINKFLD | 00004 | 000010 | 00172 | 0144 | 0163 | 0174 | | | | | | |
| OPLIST | 00004 | 000054 | 00101 | 0082 | 0176 | | | | | | | |
| OPLSTND | 00001 | 00006C | 00102 | 0082 | 0090 | 0176 | | | | | | |
| QUEUEPTR | 00004 | 000118 | 00166 | 0141 | 0145 | 0160 | 0163 | | | | | |
| QUEUETA2 | 00001 | 000000 | 00001 | | | | | | | | | |
| R0 | 00001 | 000000 | 00003 | 0090 | 0091 | | | | | | | |
| R1 | 00001 | 000001 | 00004 | 0083 | 0086 | 0086 | 0139 | 0145 | 0160 | 0161 | 0161 | |
| R10 | 00001 | 00000A | 00013 | | | | | | | | | |
| R11 | 00001 | 00000B | 00014 | | | | | | | | | |
| R12 | 00001 | 00000C | 00015 | 0019 | 0020 | 0021 | 0095 | | | | | |
| R13 | 00001 | 00000D | 00016 | 0019 | 0023 | 0024 | 0025 | 0026 | 0026 | 0094 | 0094 | 0095 |
| R14 | 00001 | 00000E | 00017 | 0019 | 0085 | 0095 | 0096 | 0147 | 0162 | 0164 | | |
| R15 | 00001 | 00000F | 00018 | 0022 | 0023 | 0024 | 0025 | 0084 | 0085 | | | |
| R2 | 00001 | 000002 | 00005 | 0140 | 0141 | 0142 | 0142 | 0144 | 0146 | | | |
| R3 | 00001 | 000003 | 00006 | | | | | | | | | |
| R4 | 00001 | 000004 | 00007 | 0081 | 0083 | 0088 | 0088 | | | | | |
| R5 | 00001 | 000005 | 00008 | 0082 | 0084 | 0089 | 0091 | | | | | |
| R6 | 00001 | 000006 | 00009 | 0089 | | | | | | | | |
| R7 | 00001 | 000007 | 00010 | 0082 | | | | | | | | |
| R8 | 00001 | 000008 | 00011 | | | | | | | | | |
| R9 | 00001 | 000009 | 00012 | | | | | | | | | |
| SAVEAREA | 00004 | 000120 | 00168 | 0022 | | | | | | | | |
| TEMPSAVE | 00004 | 00011C | 00167 | 0140 | 0146 | | | | | | | |
| TESTLAST | 00004 | 000038 | 00090 | 0087 | | | | | | | | |
| TESTLOOP | 00002 | 000022 | 00083 | 0089 | | | | | | | | |

NO STATEMENTS FLAGGED IN THIS ASSEMBLY
*STATISTICS* SOURCE RECORDS (SYSIN) = 150 SOURCE RECORDS (SYSLIB) = 25
*OPTIONS IN EFFECT* LIST, NODECK, LOAD, NORENT, XREF, NOTEST, ALGN, OS, LINECNT = 55
231 PRINTED LINES

```
 F44-LEVEL LINKAGE EDITOR OPTIONS SPECIFIED MAP,LET,LIST,NCAL
           VARIABLE OPTIONS USED -  SIZE=(45056,6144)-          DEFAULT OPTION(S) USED
IEW0000              ENTRY UTILITY

                                                    MODULE MAP

  CONTROL SECTION                          ENTRY

    NAME     ORIGIN  LENGTH                  NAME   LOCATION     NAME   LOCATION     NAME   LOCATION     NAME   LOCATION

  QUEUETA2       00     174
  UTILITY       178     5A0
                                           PRINT        1DA    PCHKRETN     436

 ENTRY ADDRESS       178
 TOTAL LENGTH        718

****GO        DOES NOT EXIST BUT HAS BEEN ADDED TO DATA SET
```

```
F.P. REGS.  00.01B6B8 0001B690   50.04BC6A 00000050   00.00C7D4 C4F2F6F3   00.000000 00000000

REGS 0-7     00040950 00040954 0001B6AC 00000000    00040A14 00040954 00000004 00040953
REGS 8-15    0001B690 00000000 0001B6B8 00000000    6F0408EE 00040A08 6F040912 000409F0

000000    00000000 00000000 00000000 00000000    000408E8 00000000 FF060000 80000000  *....................Y............*
000020    FF040003 40006A3E FFB50001 5F040938    0000FF00 00000000 FE040233 80000A06  *.... ..........................*
000040    00001360 08000000 A0001468 00005920    02C018A4 0000996C 00040000 00007498  *................................*
000060    00040000 00007BC8 00040000 00007588    00000000 00012D10 00040000 0000751A  *.......H........................*

0408E0    D5016012 9BC84780 90ECD00C 05C041F0    C11A50FD 000850DF 000418DF D703D008  *N....H.........0A...........P...*
040900    D0084140 C0669857 C1621814 58F50000    05EF1211 4780C032 41440020 8756C01C  *... ....A....5..................*
040920    4100C062 19054770 C0480000 58DD0004    98ECD00C 07FE0001 47F0C03E 000409D4  *........................0.....M*
040940    000409D4 000409F0 000409D4 000409F0    000409F0 00000000 00000000 00000000  *...M...0...M...0...0............*
040960    00000000 00000000 00000000 00000000    00000000 00000000 00000000 00000000  *................................*
040980    00000000 00040954 00000000 00000000    00000000 92E49210 100247F0 92E49240  *.....................U.....0.U. *
0409A0    100492B0 41469200 10029200 10019200    10034110 00000000 00000000 00000000  *................................*
0409C0    00000000 00040954 00000000 00000000    00000000 5020C116 5820C112 12224740  *......................A...A.... *
0409E0    C0F85020 10105010 C1125820 C11607FE    5810C112 1211078E D203C112 101007FE  *.8......A...A.....A.....K.A.....*
040A00    00000000 0001B6AC 077E95FF 0004CF68    00000000 D26D4152 41519012 41085820  *.....................K...........*
040A20    9A325820 2000D214 41482000 95FF6002    4770995C D2024152 600DD205 4156601C  *......K.............K.....K.....*
040A40    D207415D A0084150 41504570 957E58A0    0004093C 00000004 00040953 5000D207  *K.............................K.*
040A60    9CECD00C 05C004F0 07004110 C0100511    0F040B04 7FFF0A0E 58B00010 9110B074  *.......0........................*

041020    4A009BDE 40050000 47F095C6 48609BEE    8A600001 4770969E 48609C26 41660001  *.... ....0.F...................*
```



**********

```
 SSSSSSSSSS   OOOOOOOOOOOO  RRRRRRRRRRR   TTTTTTTTTTTT
SSSSSSSSSSSS  OOOOOOOOOOOO  RRRRRRRRRRRR  TTTTTTTTTTTT
SS        SS  OO        OO  RR        RR       TT
SS            OO        OO  RR        RR       TT
SSS           OO        OO  RR        RR       TT
 SSSSSSSSS    OO        OO  RRRRRRRRRRRR       TT
  SSSSSSSS    OO        OO  RRRRRRRRRRR        TT
         SSS  OO        OO  RR     RR          TT
          SS  OO        OO  RR      RR         TT
SS        SS  OO        OO  RR       RR        TT
SSSSSSSSSSSS  OOOOOOOOOOOO  RR        RR       TT
 SSSSSSSSSS   OOOOOOOOOOOO  RR         RR      TT
```

```
 SSSSSSSSSS   UU        UU  PPPPPPPPPPP
SSSSSSSSSSSS  UU        UU  PPPPPPPPPPPP
SS        SS  UU        UU  PP        PP
SS            UU        UU  PP        PP
SSS           UU        UU  PP        PP
 SSSSSSSSS    UU        UU  PPPPPPPPPPPP
  SSSSSSSS    UU        UU  PPPPPPPPPPP
         SSS  UU        UU  PP
          SS  UU        UU  PP
SS        SS  UU        UU  PP
SSSSSSSSSSSS  UUUUUUUUUUUU  PP
 SSSSSSSSSS    UUUUUUUUUU   PP
```

```
 9999999999
999999999999
99        99
99        99
99        99
999999999999
999999999999
          99
          99
99        99
999999999999
 9999999999
```



**********

| SYMBOL | TYPE | ID | ADDR | LENGTH | LD ID |
|---|---|---|---|---|---|
| SORTSUPL | SD | 01 | 000000 | 000282 | |
| PCHKRETN | ER | 02 | | | |

```
 LOC  OBJECT CODE    ADDR1 ADDR2  STMT   SOURCE STATEMENT                                                F08APR70   9/17/70
000000                                1 SORTSUPL CSECT                                                                  00000100
                                      2          COPY  MHMBEGIN                                                         00000200
000000                                3 R0       EQU   0                                                                00000700
000001                                4 R1       EQU   1                                                                00000800
000002                                5 R2       EQU   2                                                                00000900
000003                                6 R3       EQU   3                                                                00001000
000004                                7 R4       EQU   4                                                                00001100
000005                                8 R5       EQU   5                                                                00001200
000006                                9 R6       EQU   6                                                                00001300
000007                               10 R7       EQU   7                                                                00001400
000008                               11 R8       EQU   8                                                                00001500
000009                               12 R9       EQU   9                                                                00001600
00000A                               13 R10      EQU   10                                                               00001700
00000B                               14 R11      EQU   11                                                               00001800
00000C                               15 R12      EQU   12                                                               00001900
00000D                               16 R13      EQU   13                                                               00002000
00000E                               17 R14      EQU   14                                                               00002100
00000F                               18 R15      EQU   15                                                               00002200
000000 90EC D00C            0000C    19          STM   R14,R12,12(R13)     SAVE THE CALLER'S REGISTERS                  00002400
000004 05C0                          20          BALR  R12,0               ESTABLISH PROGRAM BASE                       00002500
000006                               21          USING *,R12               LET THE ASSEMBLER KNOW.                      00002600
000006 41F0 C216            0021C    22          LA    R15,SAVEAREA        ADDRESS OF MY SAVE AREA                      00002700
00000A 50FD C008            00008    23          ST    R15,8(R13)          BACKWARD CHAIN                               00002800
00000E 50DF 0004            00004    24          ST    R13,4(R15)          FORWARD CHAIN                                00002900
000012 18DF                          25          LR    R13,R15             ESTABLISH MY SAVE AREA                       00003000
000014 D703 D008 D008 00008 00008    26          XC    8(4,R13),8(R13)     TERMINATE THE FORWARD CHAIN                  00003100
                                     27 *        END OF STANDARD ENTRY LINKAGE CONVENTIONS.                               00003200
                                     28          PRINT OFF                                                              00000300
```

```
LOC  OBJECT CODE    ADDR1 ADDR2  STMT   SOURCE STATEMENT                                          F08APR70   9/17/70

                                  35 ***********************************************************************  00001000
                                  36 *                                                                       00001100
                                  37 *        THIS ROUTINE IS AN EXAMPLE OF A "LINEAR SELECTION" SORT        00001200
                                  38 *                                                                       00001300
                                  39 *        THE LINEAR SELECTICN WORKS ON THE PRINCIPLE OF FINDING THE     00001400
                                  40 *        SMALLEST DATA ITEM AND MOVING IT TO IT'S APPROPRIATE PLACE     00001500
                                  41 *        IN THE LIST, THEN FINDING THE NEXT LOWEST DATA ITEM AND MOVING 00001600
                                  42 *        IT, ETC., ETC., ETC. GRAPHICALLY, IT LOOKS LIKE THIS:          00001700
                                  43 *                                                                       00001800
                                  44 *        LEGEND: SCAN #0 IS THE ORIGINAL LIST. THE + SIGN SHOWS THE     00001900
                                  45 *                START VALUE FOR THE NEXT SCAN.                         0000200C
                                  46 *                                                                       00002100
                                  47 *        SCAN #0  #1  #2  #3  #4  #5                                    00002200
                                  48 *                                                                       00002300
                                  49 *        *    +5   1   1   1   1   1   NUMBER OF SCANS = N -1.          00002400
                                  50 *        D     6  +6   2   2   2   2    (EACH IS SHORTER THAN THE LAST) 00002500
                                  51 *        A     4   4  +4   3   3   3   NUMBER OF COMPARES = N(N-1)/2    00002600
                                  52 *        T     1   5   5  +5   4   4                                    00002700
                                  53 *        A     2   2   6   6  +6   5   NUMBER OF DATA MOVEMENTS         00002800
                                  54 *        *     3   3   3   4   5   6    (WORST CASE) = N-1.             00002900
                                  55 *                                                                       00003000
                                  56 *        A 'SCAN' IS A SINGLE PASS THROUGH THE LIST.                    00003100
                                  57 *                                                                       00003200
                                  58 *        THIS PARTICULAR SAMPLE WILL SORT A LIST OF HALF-WORD           00003300
                                  59 *        QUANTITIES IN THE LIST CALLED 'INPUT' INTO ORDER BACK INTO     00003400
                                  60 *        THE SAME LIST. WHEN FINISHED, A DUMP IS TAKEN TO VERIFY THE    00003500
                                  61 *        ACCURACY OF THE SORT.                                          00003600
                                  62 *                                                                       00003700
                                  63 ***********************************************************************  00003800
```

```
 LOC  OBJECT CODE     ADDR1 ADDR2  STMT   SOURCE STATEMENT                                    F08APR70   9/17/70

                                    65 *        INITIALIZE THE REGISTERS FOR THE OUTER LOOP.                 00004000
                                    66 *                                                                     00004100
00002A 989B C26E            00274   67          LM    R9,R11,=A(INPUT,2,INPTEND-3)                           00004200
                                    68 *                                                                     00004300
                                    69 *        INITIALIZE THE REGISTERS FOR THE INNER (SELECTING) LOOP.     00004400
                                    70 *                                                                     00004500
00002E 9867 C262            00268   71 SORTPASS LM    R6,R7,=A(2,INPTEND-1)                                  00004600
000032 1889                         72          LR    R8,R9          SET THE NEW LOWER END ADDRESS.          00004700
000034 1858                         73          LR    R5,R8          ASSUME THAT IT'S THE LOWEST VALUE.      00004800
                                    74 *                                                                     00004900
                                    75 *        SEARCH FOR THE SMALLEST VALUE IN THE LIST                    00005000
                                    76 *                                                                     00005100
000036 D501 5000 8000 00000 00000   77 COMPARE  CLC   0(2,R5),0(R8)  COMPARE TWO VALUES                      00005200
00003C 47D0 C03C            00042   78          BNH   LOWER          BRANCH, PREVIOUS LOW STILL HOLDS        00005300
000040 1858                         79          LR    R5,R8          NEW LOW FOUND, SAVE ITS ADDRESS         00005400
000042 8786 C030            00036   80 LOWER    BXLE  R8,R6,COMPARE  CONTINUE TO END OF LIST                 00005500
                                    81 *                                                                     00005600
                                    82 *        AT THE END OF ANY ONE PASS, REG 5 ADDRESSES THE LOWEST VALUE 00005700
                                    83 *        REMAINING IN THE LIST.                                       00005800
                                    84 *                                                                     00005900
000046 D201 C068 5000 0006E 00000   85          MVC   LINETEMP,0(R5)       MOVE LOWEST TO TEMPORARY SAVE AREA 00006000
00004C D201 5000 9000 00000 00000   86          MVC   0(2,R5),0(R9)        REPLACE WITH POSITIONALLY LOWEST.  00006100
000052 D201 9000 C068 00000 0006E   87          MVC   0(2,R9),LINETEMP     PUT THE LOWEST BACK IN THE LIST.   00006200
000058 879A C028            0002E   88          BXLE  R9,R10,SORTPASS      CONTINUE UNTIL END OF LIST IS FOUND. 00006300
                                    89 *                                                                     00006400
00005C 0001                         90          DC    H'1'                 CREATE A DUMP TO SEE THE OUTPUT LIST 00006500
00005E 47F0 C06A            00070   91          B     PASTLINE             BRANCH AROUND THE TABLE.            00006600


000062 0019001300210029             93 INPUT    DC    H'25,19,33,41,16,22'                                   00006800
C0006E                              94 INPTEND  EQU   *                                                      00006900
00006E                              95 LINETEMP DS    H                    TEMPORARY SAVE AREA .               00007000
000070                              96 PASTLINE DS    0H                                                      00007100


                                    98 ***********************************************************************00007300
                                    99 *                                                                     00007400
                                   100 *        ANSWER THESE QUESTIONS ABOUT THE LINEAR SELECTION ROUTINE    00007500
                                   101 *        AND THE MATCHING DUMP.                                       00007600
                                   102 *                                                                     00007700
                                   103 *        1. USING THE DUMP, WHAT WILL BE THE ADDRESS IN REG. 5 AT THE 00007800
                                   104 *           END OF SCAN # 2 ?                                         00007900
                                   105 *                                                                     00008000
                                   106 *        2. WHAT WILL BE THE ADDRESS IN REG. 9 AT THE START OF SCAN 2 ? 00008100
                                   107 *                                                                     00008200
                                   108 *        3. HOW MANY TIMES WILL THE 3 MVC'S BE EXECUTED DURING THE    00008300
                                   109 *           SORT ?                                                    00008400
                                   110 *                                                                     00008500
                                   111 *        4. IF THE FIRST ITEM IN THE LIST WERE A '0', WOULD THE THREE 00008600
                                   112 *           'MVC' INSTRUCTIONS STILL BE EXECUTED IN THE FIRST SCAN ?  00008700
                                   113 *                                                                     00008800
                                   114 ***********************************************************************00008900
```

```
F.P. REGS.  80.0C1C80 0001D0DC   00.01D11C 00000000   00.01B1C8 000647C8   00.000000 00000000

REGS 0-7     FFFFFF2E 00063FF8 0001CF1C 00000000    0001B3A8 00058044 00000002 00058045
REGS 8-15    C0058046 00058044 00000002 00058043    6F057FDE 000581F4 0000C7D4 0005851E

000000    00000000 00000000 00000000 00000000    00057FD8 00000000 FF060000 80000000  *....................Q............*
000020    FF050001 4007F04A FFA50001 6F058036    0000FFC0 00000000 FE040234 80000A1E  *.... .0.........................*
000040    00000000 04000000 000014D0 00005920    083D5600 0000996C 00040000 00007498  *................................*
000060    00040000 00007BC8 00040000 00007588    00000000 00012D10 00040000 0000751A  *.......H........................*

057FC0    96204177 000847F0 96085870 9C6647F0    95C6D500 9CD59CA7 90ECD00C 05C041F0  *.......0.......0.FN..N.........0*
057FE0    C21650FD 000850DF 000418DF D703D008    D00858F0 C26AD201 F000C022 47F0C024  *B............P......0B.K.0....C..*
058000    07FE989B C26E9867 C2621889 1858D501    50008000 47D0C03C 18588786 C030D201  *....B...B.....N................K.*
058020    C0685000 D2015000 9000D201 9000C068    879AC028 000147F0 C06A0010 00130016  *....K.....K............0........*
058040    00190021 00290021 41400010 41500008    9601C0FC 9602C0FC 41800002 11884168  *......... ......................*
058060    00024186 00021946 4740C0A4 41E6C0EA    41F8C0EA D501E000 F0004720 C0CA47F0  *......... ...W...8..N...0......0*
058080    C0809101 C0FC4780 C0E44650 C0B447F0    C0E494FE C0FC9102 C0FC4780 C07694FD  *.........U.....0.U.............*
0580A0    C0FC1B88 47F0C080 D701E000 F000D701    F000E000 D701E000 F0009601 C0FC47F0  *.....0..P...0.P.0...P...0......0*
0580C0    C0800003 47F0C0FE 0019000F 00280025    00150041 00020013 00630020 1B224920  *.....0..........................*
0580E0    C1724780 C15A4132 000241E2 C16241F2    C160D501 E000F000 4740C126 41220002  *A...A......SA..2A.N...0.. A.....*
058100    47F0C100 D701EC00 F000D701 F000EC00    D701E000 F0004B20 C27A1222 4740C154  *.0A.P...0.P.0...P...0...B.... A.*
058120    41E2C162 41F2C160 D501E000 F0004740    C1261823 47F0C100 000447F0 C1740057  *.SA..2A.N...0.. A....0A....0A...*
058140    0043005E 00020004 0001005A 01BD0057    00104180 C1EE5820 C2021B33 88200001  *....................A...B.......*
058160    12224780 C20841E3 B00241F2 30001AFF    1AFBD501 E000F000 4720C1B2 41330001  *....B..T...2......N...0...A.....*
058180    41023000 5900C202 4780C17C 47F0C188    1843D201 C206E00C D201E000 F000D201  *......B...A..0A...K.B...K...0.K.*
0581A0    F000C206 19324780 C1E81B32 47D0C1E8    41E3B002 41F23000 1AFF1AFB D501E000  *0.B.....AY....AY.T...2......N...*
0581C0    F00C4720 C1B41834 47F0C19E 000C0055    003A0004 00160017 0027003E 00050002  *0...A....0A....................*
0581E0    0000000A 83D60005 58DD0004 98ECD00C    07FE0000 000432E4 00063F68 00000000  *.....0................U........*
058200    0004331C 000432E4 00000000 00000000    00000000 00000000 3104330B 40000005  *.......U................... ...*
058220    0804331C 00000000 0E000000 00000C00    0004A6D0 FF024000 00043338 00043340  *....................... ........ *
058240    00000002 00058045 0005851E 0005803A    00000002 00058043 0002400C FF054000  *............................ ... .*
05826C    90ECD00C 05C004F0 07004110 C0100511    0FC58304 7FFF0A0E 58B00010 9110B074  *.......0........................*

058820    50401010 4340A008 12444780 885C4820    A00E5420 8A9E4780 87FC0620 5A20B010  *. ... ........................*
```

```
LOC  OBJECT CODE    ADDR1 ADDR2  STMT   SOURCE STATEMENT                                    F08APR70   9/17/70

                                 116 *.......................................................... 00009100
                                 117 *                                                          00009200
                                 118 *        ANSWERS FOR THE LINEAR SELECTION SORT.            00009300
                                 119 *                                                          00009400
                                 120 *        1. REGISTER 5 WILL CONTAIN THE ADDRESS OF 'INPUT+2' 00009500
                                 121 *           OR X'05803C'.                                  00009600
                                 122 *                                                          00009700
                                 123 *        2. REGISTER 9 WILL CONTAIN THE ADDRESS OF 'INPUT+2' 00009800
                                 124 *           OR X'05803C'.                                  00009900
                                 125 *                                                          00010000
                                 126 *        3. THERE WILL BE 5 EXCHANGES, ONE PER SCAN.       00010100
                                 127 *                                                          00010200
                                 128 *        4. YES, BECAUSE THERE IS NO CHECK FOR ITEMS ALREADY LOCATED 00010300
                                 129 *           IN THEIR OWN SPOT.                             00010400
                                 130 *                                                          00010500
                                 131 *.......................................................... 00010600
```

```
LOC  OBJECT CODE    ADDR1 ADDR2  STMT   SOURCE STATEMENT                                    F08APR70   9/17/70

                                 133 ***********************************************************************  00010800
                                 134 *                                                                       00010900
                                 135 *        THIS IS AN EXAMPLE OF THE "PAIR INTERCHANGING" SORT            00011000
                                 136 *        TECHNIQUE.                                                     00011100
                                 137 *                                                                       00011200
                                 138 *        THE PAIR INTERCHANGE IS ANOTHER FORM OF SORT WHICH TAKES       00011300
                                 139 *        ADVANTAGE OF THE NATURAL ORDER OF THE DATA. EACH PASS          00011400
                                 140 *        THROUGH THE DATA ACTUALLY MAKES ONLY HALF THE POSSIBLE         00011500
                                 141 *        NUMBER OF COMPARES.                                            00011600
                                 142 *        THE 1ST AND 2ND, 3RD AND 4TH, ETC., ARE COMPARED AND           00011700
                                 143 *        INTERCHANGED IF OUT OF ORDER. A SCAN IS COMPLETED WHEN         00011800
                                 144 *        ALL THE "ODD-EVEN" PAIRS HAVE BEEN COMPARED. IN THE NEXT       00011900
                                 145 *        SCAN, THE 2ND AND 3RD, 4TH AND 5TH, ETC., ARE COMPARED.        00012000
                                 146 *        WHEN ALL THE "EVEN-ODD" PAIRS HAVE BEEN COMPARED, THE          00012100
                                 147 *        SECOND SCAN IS COMPLETED. THESE 2 SCANS MAKE UP A "CYCLE".     00012200
                                 148 *        A MINIMUM OF 2 AND A MAXIMUM OF N SCANS ARE REQUIRED TO        00012300
                                 149 *        COMPLETE THE SORT. OR, THE SORT IS COMPLETE WHENEVER NO        00012400
                                 150 *        EXCHANGES ARE MADE ON ANY SCAN AFTER THE SECOND.               00012500
                                 151 *                                                                       00012600
                                 152 *        TWO NUMBERS CONNECTED BY '<->' (SHOWN VERTICALLY IN THE        00012700
                                 153 *        DIAGRAM) INDICATES A COMPARISON TAKING PLACE. IN THE PLACES    00012800
                                 154 *        WHERE THE ENTRIES ARE CONNECTED BY '<X>', AN INTERCHANGE IS    00012900
                                 155 *        INDICATED, AND WILL TAKE PLACE. (THE ACTUAL INTERCHANGE WILL   00013000
                                 156 *        SHOW UP IN THE LIST AT THE END OF THE SCAN). THE NUMBERS TO    00013100
                                 157 *        THE LEFT ON THE SCAN LINE SHOW THE LIST AT THE START OF THE    00013200
                                 158 *        SCAN, THOSE AT THE RIGHT SHOW THE LIST AT THE END OF THE SCAN  00013300
                                 159 *        AND AT THE START OF THE NEXT SCAN.                             00013400
                                 160 *                                                                       00013500
                                 161 *        CYCLE     # 1        # 2        # 3        # 4                 00013600
                                 162 *                 --------- --------- --------- ---------              00013700
                                 163 *        SCAN     #1   #2   #3   #4   #5   #6   #7   #8                 00013800
                                 164 *                 ---- ---- ---- ---- ---- ---- ---- ----               00013900
                                 165 *        *      5<+  5    5<+  1    1<+  1    1<+  E                    00014000
                                 166 *        *       |         X         |         |    N                    00014100
                                 167 *        *      6<+  6<+  1<+  5<+  2<+  2<+  2<+  D                    00014200
                                 168 *        D            X         X         |                              00014300
                                 169 *        A      4<+  1<+  6<+  2<+  5<+  3<+  3<+  O                    00014400
                                 170 *        T       X         X         X         |    F                    00014500
                                 171 *        A      1<+  4<+  2<+  6<+  3<+  5<+  4<+                       00014600
                                 172 *        *            X         X         X         S                    00014700
                                 173 *        *      2<+  2<+  4<+  3<+  6<+  4<+  5<+  O                    00014800
                                 174 *        *       |         X         X         |    R                    00014900
                                 175 *        *      3<+  3    3<+  4    4<+  6    6<+  T                    00015000
                                 176 *                                                                       00015100
                                 177 *        LAST SCAN (#8) IS NOT REQUIRED , BECAUSE NO INTERCHANGES       00015200
                                 178 *        TOOK PLACE DURING SCAN #7.                                     00015300
                                 179 *                                                                       00015400
                                 180 ***********************************************************************  00015500
```

```
 LOC  OBJECT CODE    ADDR1 ADDR2  STMT   SOURCE STATEMENT                                    F08APR70   9/17/70

000070 4140 0010            00010  182          LA    R4,PAIREND-PAIRLIST-L'PAIRLIST  RELATIVE END OF LIST.    00015700
000074 4150 0008            00008  183          LA    R5,PAIRNUMB          NUMBER OF ITEMS IN THE LIST.          00015800
000078 9601 C0FC      00102        184          OI    SW,PAIRSW1           SET SW1 TO 1.                         00015900
00007C 96C2 C0FC      00102        185 PAIRLOOP OI    SW,PAIRSW2           SET SW2 TO 1.                         00016000
000080 4180 0002            00002  186          LA    R8,L'PAIRLIST        ELEMENT LENGTH.                       00016100
000084 1188                        187          LNR   R8,R8                - ELEMENT LENGTH.                     00016200
000086 4168 0002            00002  188 PAIRLP1  LA    R6,L'PAIRLIST(R8)                                          00016300
00008A 4186 0002            00002  189          LA    R8,L'PAIRLIST(R6)                                          00016400
00008E 1946                        190          CR    R4,R6                END OF SCAN ??                        00016500
000090 4740 C0A4            000AA  191          BL    PAIRTEST             YES                                   00016600
000094 41E6 C0EA            000F0  192          LA    R14,PAIRLIST(R6)     NO, SET UP THE COMPARISON             00016700
000098 41F8 C0EA            000F0  193          LA    R15,PAIRLIST(R8)      ADDRESSES.                           00016800
00009C D501 E000 F000 00000 00000  194          CLC   0(L'PAIRLIST,R14),0(R15)  OUT OF SEQUENCE ??               00016900
0000A2 4720 C0CA            000D0  195          BH    INTRCHNG             YES, GO EXCHANGE THEM.                00017000
0000A6 47F0 C080            00086  196          B     PAIRLP1              NO, CONTINUE THE SCAN.                00017100
0000AA 9101 C0FC      00102        197 PAIRTEST TM    SW,PAIRSW1           WERE THERE ANY INTERCHANGES ?         00017200
0000AE 4780 C0E4            000EA  198          BZ    PAIROUT              NO INTERCHANGES, EXIT.                00017300
0000B2 4650 C0B4            000BA  199          BCT   R5,*+8               # SCANS = # OF LIST ELEMENTS ?        00017400
0000B6 47F0 C0E4            000EA  200          B     PAIROUT              YES, EXIT                             00017500
0000BA 94FE C0FC      00102        201          NI    SW,255-PAIRSW1       NO, RESET SWITCH 1.                   00017600
0000BE 9102 C0FC      00102        202          TM    SW,PAIRSW2           FIRST OR SECOND SCAN OF THIS CYCLE ?  00017700
0000C2 4780 C076            0007C  203          BZ    PAIRLOOP             SECOND, GO TO LOOP.                   00017800
0000C6 94FD C0FC      00102        204          NI    SW,X'FF'-PAIRSW2     FIRST, SET SW2 TO ZERO.               00017900
0000CA 1888                        205          SR    R8,R8                                                      00018000
0000CC 47F0 C080            00086  206          B     PAIRLP1                                                    00018100
0000D0 D701 E000 F000 00000 00000  207 INTRCHNG XC    0(L'PAIRLIST,R14),0(R15)                                   00018200
0000D6 D701 F000 E000 00000 00000  208          XC    0(L'PAIRLIST,R15),0(R14)                                   00018300
0000DC D701 E000 F000 00000 00000  209          XC    0(L'PAIRLIST,R14),0(R15)                                   00018400
0000E2 9601 C0FC      00102        210          OI    SW,PAIRSW1           SET SW1 TO 1.                         00018500
0000E6 47F0 C080            00086  211          B     PAIRLP1                                                    00018600
0000EA 0003                        212 PAIROUT  DC    H'3'                 TAKE A DUMP TO SEE THE LIST           00018700
0000EC 47F0 C0FE            00104  213          B     PASTINTG             BRANCH AROUND THE TABLE               00018800

0000F0 0019000F00280025            215 PAIRLIST DC    H'25,15,40,37,21,65,02,19,99'                              00019000
000102                             216 PAIREND  EQU   *                                                          00019100
000102 00                          217 SW       DC    X'0'                                                       00019200
000008                             218 PAIRNUMB EQU   ((PAIREND-PAIRLIST)/L'PAIRLIST)-1                          00019300
000001                             219 PAIRSW1  EQU   1                    SW1                                   00019400
000002                             220 PAIRSW2  EQU   2                    SW2.                                  00019500

                                   222 ***********************************************************************  00019700
                                   223 *                                                                       00019800
                                   224 *      ANSWER THESE QUESTIONS ABOUT THE PAIR INTERCHANGE SORT.          00019900
                                   225 *                                                                       00020000
                                   226 *      1. WHICH BIT IN 'SW' IS USED TO DETERMINE WHEN WE HAVE           00020100
                                   227 *         COMPLETED A CYCLE ?                                           00020200
                                   228 *                                                                       00020300
                                   229 *      2. WHAT NUMBER WILL BE AT LOCATION 'PAIRLIST' AFTER 2 CYCLES ?   00020400
                                   230 *                                                                       00020500
                                   231 *      3. WHICH INSTRUCTION(S) DETERMINE WHERE THE SCAN WILL START ?    00020600
                                   232 *                                                                       00020700
                                   233 ***********************************************************************  00020800
```

```
F.P. REGS.  80.001C80 0001D0DC   00.01D11C 00000000   00.01B1C8 000647C8   00.000000 00000000

REGS 0-7     FFFFFF2E 00063FF8 0001CF1C 00000000    00000010 00000001 00000012 00058045
REGS 8-15    00000014 00058044 00000002 00058043    6F057FDE 000581F4 000580D6 000580D8

000000    00000000 00000000 00000000 00000000    00057FD8 00000000 FF060000 80000000  *...................Q............*
000020    FFA50003 6F007588 FFA50001 4F0580C4    C000FF00 00000000 FFA50235 AF058516  *...............D................*
000040    00057480 0080000B 0006BDC8 00005920    083CFC00 0000996C 00040000 00007498  *...........H....................*
000060    00040000 00007BC8 00040000 00007588    00000000 00012D10 00040000 0000751A  *.......H........................*

057FC0    96204177 000847F0 96085870 9C6647F0    95C6D500 9CD59CA7 90ECD00C 05C041F0  *.......0.......0.FN..N.........0*
057FE0    C21650FD 000850DF 000418DF D703D008    D00858F0 C26AD201 F000C022 47F0C024  *B...........P......0B.K.0....0..*
058000    07FE989B C26E9867 C2621889 1858D501    50008000 47D0C03C 18588786 C030D201  *....B...B.....N...............K.*
058020    C0685000 D2015000 9000D201 9000C068    879AC028 000147F0 C06A0010 00130016  *....K.....K............0........*
058040    00190021 00290021 41400010 41500008    9601C0FC 9602C0FC 41800002 11884168  *......... ......................*
058060    00024186 00021946 4740C0A4 41E6C0EA    41F8C0EA D501E000 F0004720 C0CA47F0  *......... ...W...8..N...0......0*
058080    C08091C1 C0FC4780 C0E44650 C0B447F0    C0E494FE C0FC9102 C0FC4780 C07694FD  *.........U.....0.U.............*
0580A0    C0FC1B88 47F0C080 D701E000 F000D701    F000E000 D701E000 F0009601 C0FC47F0  *.....0..P...0.P.0...P...0......0*
0580C0    C08C0003 47F0C0FE 0002000F 00130015    00190025 00280041 00630020 1B224920  *.....0..........................*
0580E0    C1724780 C15A4132 000241E2 C16241F2    C160D501 E000F000 4740C126 41220002  *A...A......SA..2A.N...0.. A.....*
058100    47F0C100 D701E000 F000D701 F000E000    D701E000 F0004B20 C27A1222 4740C154  *.0A.P...0.P.0...P...0...B.... A.*
058120    41E2C162 41F2C160 D501E000 F0004740    C1261823 47F0C100 000447F0 C1740057  *.SA..2A.N...0.. A....0A....0A...*
058140    0043005E 00020004 0001005A 01BD0057    001041B0 C1EE5820 C2021B33 88200001  *....................A...B.......*
058160    1222478C C20841E3 B00241F2 30001AFF    1AFBD501 E000F000 4720C1B2 41330001  *....B..T...2......N...0...A.....*
058180    41023000 5900C202 4780C17C 47F0C188    1843D201 C206E000 D201E000 F000D201  *......B...A..0A...K.B...K...0.K.*
0581A0    F000C206 19324780 C1E81B32 47D0C1E8    41E3B002 41F23000 1AFF1AFB D501E000  *0.B.....AY....AY.T...2......N...*
0581C0    F0004720 C1B41834 47F0C19E 000C0055    003A0004 00160017 0027003E 00050002  *0...A....0A.....................*
0581E0    000C000A 83D600C5 58DD0004 98ECD00C    07FE0000 000432E4 00063F68 00000000  *.....0..................U........*
058200    00043310 000432E4 00000000 00000000    00000000 00000000 3104330B 40000005  *.......U..................... ...*
058220    08043310 00000000 0E000000 00000000    0004A6D0 FF024000 00043338 00043340  *....................... ........ *
058240    00000002 00058045 0005851E 0005803A    00000002 00058043 0002400C FF054000  *........................... ... .*
058260    90ECD0CC 05C004F0 07004110 C0100511    0F058304 7FFF0A0E 58B00010 9110B074  *.......0........................*

058820    50401010 4340A0C8 12444780 885C4820    A00E5420 8A9E4780 87FC0620 5A20B010  *. ... ........................*
```

```
LOC  OBJECT CODE    ADDR1 ADDR2  STMT   SOURCE STATEMENT                                    F08APR70   9/17/70

                                 235 *.......................................................... 00021000
                                 236 *                                                          00021100
                                 237 *      ANSWERS TO THE PAIR INTERCHANGE SORT.               00021200
                                 238 *                                                          00021300
                                 239 *      1. THE SWITCH CALLED 'SW2' IS USED TO DETERMINE THE END OF A  00021400
                                 240 *         CYCLE.                                           00021500
                                 241 *                                                          00021600
                                 242 *      2. ITEM '15' WILL BE LOCATED AT 'PAIRLIST' AFTER 2 CYCLES.  00021700
                                 243 *                                                          00021800
                                 244 *      3. THE START OF THE SCAN IS SET UP BY THE CHOICE OF BRANCHING  00021900
                                 245 *         TO 'PAIRLOOP' OR 'PAIRLP1', BROUGHT ABOUT BY THE INSTRUCTIONS 00022000
                                 246 *         JUST IN FRONT OF 'INTRCHNG'.                     00022100
                                 247 *                                                          00022200
                                 248 *.......................................................... 00022300
```

```
 LOC  OBJECT CODE    ADDR1 ADDR2  STMT   SOURCE STATEMENT                                          F08APR70   9/17/70

000104                            250 PASTINTG DS    0H                                                          00022500
                                  251 ************************************************************************* 00022600
                                  252 *                                                                         00022700
                                  253 *        ANOTHER METHOD OF SORTING THAT IS QUITE SIMILAR TO EXCHANGING    00022800
                                  254 *        IS CALLED "SIFTING".                                             00022900
                                  255 *        "SIFTING" OPERATES A BIT DIFFERENTLY IN THAT IT WILL WORK ITS    00023000
                                  256 *        WAY BACK TO THE TOP OF THE LIST UNTIL ITS NEW-FOUND LOW          00023100
                                  257 *        NUMBER CAN BE PUSHED NO LOWER IN THE LIST. AT THIS POINT, IT     00023200
                                  258 *        RETURNS TO THE PLACE WHERE IT LEFT OFF IN THE LIST AND           00023300
                                  259 *        PROCEEDS TO SCAN TOWARDS THE BOTTOM LOOKING FOR ANOTHER          00023400
                                  260 *        OUT-OF-SEQUENCE NUMBER, WHICH IT WILL AGAIN TAKE TO ITS          00023500
                                  261 *        APPROPRIATE POSITION TOWARDS THE TOP OF THE LIST. BECAUSE OF     00023600
                                  262 *        THIS ACTION OF SHOVING THE SMALLEST NUMBERS TO THE LOW END OF    00023700
                                  263 *        LIST, THIS METHOD IS ALSO CALLED "BUBBLING". IN MOST CASES,      00023800
                                  264 *        THIS TECHNIQUE REDUCES THE NUMBER OF COMPARES OVER THE           00023900
                                  265 *        "EXCHANGING" TECHNIQUE. NUMBER OF SCANS = 1, MINIMUM COMPARES    00024000
                                  266 *        = N-1, MAXIMUM =(1+SUMMATION(J = 3 TO N) OF (J-1)).              00024100
                                  267 *                                                                         00024200
                                  268 *        LEGEND: VERTICAL SEPARATION USING A STROKE '|' INDICATES A       00024300
                                  269 *                COMPARE BEING MADE, SEPARATION WITH AN 'X' SHOWS A       00024400
                                  270 *                NEED FOR AN EXCHANGE, WHICH IS CARRIED OUT BEFORE        00024500
                                  271 *                THE NEXT COMPARE.                                        00024600
                                  272 *                                                                         00024700
                                  273 *  COMPARE #1  #2  #3  #4  #5  #6  #7  #8  #9  #10 #11 #12 #13 #14 #15    00024800
                                  274 *                                                                         00024900
                                  275 *      *   5<+ 5   5<+ 4   4   4<+ 1   1   1   1<+ 1   1   1   1   N       00025000
                                  276 *      *     |       X           X               |                   O       00025100
                                  277 *      *   6<+ 6<+ 4<+ 5   5<+ 1<+ 4   4   4<+ 2<+ 2   2   2   2<+ T       00025200
                                  278 *      *         X           X               X                   |       00025300
                                  279 *      D   4   4<+ 6   6<+ 1<+ 5   5   5<+ 2<+ 4   4   4   4<+ 3<+ R       00025400
                                  280 *      A                 X               X                   X       E       00025500
                                  281 *      T   1   1   1   1<+ 6   6   6<+ 2<+ 5   5   5   5<+ 3<+ 4   Q       00025600
                                  282 *      A                           X                       X           U       00025700
                                  283 *      *   2   2   2   2   2   2   2<+ 6   6   6   6<+ 3<+ 5   5   I       00025800
                                  284 *      *                                               X               R       00025900
                                  285 *      *   3   3   3   3   3   3   3   3   3   3   3<+ 6   6   6   E       00026000
                                  286 *                                                                   D       00026100
                                  287 *                                                                   .       00026200
                                  288 ************************************************************************* 00026300
```

```
 LOC  OBJECT CODE    ADDR1 ADDR2  STMT   SOURCE STATEMENT                                          F08APR70   9/17/70

000104 1B22                       290          SR    R2,R2                SET INDEX TO 0.                      00026500
000106 4920 C172            00178 291 SIFTLOOP CH    R2,SIFTDISP          IF INDEX = END OF LIST,              00026600
00010A 4780 C15A            00160 292          BE    SIFTEXIT              EXIT.                               00026700
00010E 4132 0002            00002 293          LA    R3,L'SIFTDATA(R2)  OTHERWISE REMEMBER THE NEXT ITEM.      00026800
000112 41E2 C162            00168 294          LA    R14,SIFTDATA+L'SIFTDATA(R2)                               00026900
000116 41F2 C160            00166 295          LA    R15,SIFTDATA(R2)   SET UP ADDRESSES OF TWO ITEMS,         00027000
00011A D501 E000 F000 00000 00000 296          CLC   0(L'SIFTDATA,R14),0(R15)   COMPARE THEM,                00027100
000120 4740 C126            0012C 297          BL    REVERSE                     IF OUT OF SEQUENCE, SWAP,       00027200
000124 4122 0002            00002 298          LA    R2,L'SIFTDATA(R2)           OTHERWISE, SET UP FOR NEXT      00027300
000128 47F0 C100            00106 299          B     SIFTLOOP                    TWO ITEMS AND CONTINUE.         00027400
00012C D701 E000 F000 00000 00000 300 REVERSE  XC    0(L'SIFTDATA,R14),0(R15)   SWAP TWO ITEMS                 00027500
000132 D701 F000 E000 00000 00000 301          XC    0(L'SIFTDATA,R15),0(R14)                                  00027600
000138 D701 E000 F000 00000 00000 302          XC    0(L'SIFTDATA,R14),0(R15)                                  00027700
00013E 4B20 C27A            00280 303          SH    R2,=AL2(L'SIFTDATA) SET INDEX = TO PRECEEDING ITEM        00027800
000142 1222                       304          LTR   R2,R2                 IF < 0, RETURN TO FORWARD SCAN.     00027900
000144 4740 C154            0015A 305          BM    FORWARD                                                   00028000
000148 41E2 C162            00168 306          LA    R14,SIFTDATA+L'SIFTDATA(R2)                               00028100
00014C 41F2 C160            00166 307          LA    R15,SIFTDATA(R2)    SET UP TWO ADDRESSES FOR BACKWARD     00028200
000150 D501 E000 F000 00000 00000 308          CLC   0(L'SIFTDATA,R14),0(R15)   SCAN AND COMPARE THE DATA.   00028300
000156 4740 C126            0012C 309          BL    REVERSE              IF OUT OF ORDER, SWAP AND CONTINUE.  00028400
00015A 1823                       310 FORWARD  LR    R2,R3                SET INDEX = REMEMBERED HIGH ADDRESS. 00028500
00015C 47F0 C100            00106 311          B     SIFTLOOP              AND GO BACK TO FORWARD SCAN.        00028600

000160 0004                       313 SIFTEXIT DC    H'4'              TAKE A DUMP TO VERIFY SORT WORKS.       00028800
000162 47F0 C174            0017A 314          B     SHELLSTR          BRANCH AROUND TABLES.                   00028900

000166 00570043005E0002           316 SIFTDATA DC    H'87,67,94,2,4,1,90,445,87'                               00029100
000178 0010                       317 SIFTDISP DC    AL2(SIFTDISP-SIFTDATA-L'SIFTDATA)                         00029200
00017A                            318 SHELLSTR DS    0H                                                        00029300

                                  320 ************************************************************************ 00029500
                                  321 *                                                                        00029600
                                  322 *        ANSWER THESE QUESTIONS ABOUT THE SIFTING SORT ROUTINE.          00029700
                                  323 *                                                                        00029800
                                  324 *        1. WHICH INSTRUCTION(S) DETERMINE THE END OF THE SORT ?         00029900
                                  325 *                                                                        00030000
                                  326 *        2. WHICH INSTRUCTION(S) STOP US FROM 'BUBBLING' OFF THE LOW     00030100
                                  327 *           ADDRESS END OF THE LIST ?                                    00030200
                                  328 *                                                                        00030300
                                  329 *        3. HOW MANY SCANS WILL IT TAKE TO COMPLETELY SORT THIS LIST ?   00030400
                                  330 *                                                                        00030500
                                  331 *        4. WHICH WILL BE THE 3RD ITEM TO OCCUPY THE LOWEST ADDRESS      00030600
                                  332 *           IN THE LIST (EXCLUDING 87, WHICH WAS THERE AT THE START) ?   00030700
                                  333 *                                                                        00030800
                                  334 ************************************************************************ 00030900
```

```
F.P. REGS.  80.0C1C80 0001D0DC   00.01D11C 00000000   00.01B1C8 000647C8   00.000000 00000000

REGS 0-7     FFFFFF2E 00063FF8 00000010 00000010    00000010 00000001 00000012 00058045
REGS 8-15    00000014 00058044 00000002 00058043    6F057FDE 000581F4 00058148 00058146

000000    00000000 00000000 00000000 00000000    00057FD8 00000000 FF060000 80000000  *...................Q............*
000020    FFA50003 6F007588 FFA50001 4F05813A    0000FF00 00000000 FF040232 8000412E  *...............................*
000040    0006AE40 0C000000 000014D0 00005920    083C8900 0000996C 00040000 00C07498  *... ..........................*
000060    00040000 00007BC8 00040000 00007588    00000000 00012D10 00040000 0000751A  *.......H......................*

057FC0    96204177 000847F0 96085870 9C6647F0    95C6D500 9CD59CA7 9CECD00C 05C041F0  *.......0.......0.FN..N.........0*
057FE0    C21650FD 000850DF 000418DF D703D008    D00858F0 C26AD201 F000C022 47F0C024  *B...........P......0B.K.0....0..*
058000    07FE989B C26E9867 C2621889 1858D501    50008000 47D0C03C 18588786 C030D201  *....B...B.....N...............K.*
058020    C0685000 D2015000 9000D201 9000C068    879ACC28 000147F0 C06A001C 00130016  *....K.....K............0........*
058040    00190021 00290021 41400010 41500008    9601C0FC 9602C0FC 41800002 11884168  *......... ......................*
058060    00024186 00021946 4740C0A4 41E6C0EA    41F8C0EA D5C1E000 F0004720 C0CA47F0  *......... ...W...8..N...0......0*
058080    C0809101 C0FC478C C0E44650 C0B447F0    C0E494FE C0FC9102 C0FC478C C07694FD  *..........U.....0.U...........*
0580A0    C0FC1B88 47F0CC80 D701E000 F000D701    F000E000 D701E000 F0009601 C0FC47F0  *.....0..P...0.P.0...P...0......0*
0580C0    C08C0003 47F0CCFE 0002000F C0130015    00190025 00280041 00630020 1B224920  *.....0........................*
0580E0    C1724780 C15A4132 000241E2 C16241F2    C16CD501 E000F000 4740C126 41220002  *A...A......SA..2A.N...0.. A.....*
058100    47F0C100 D701E000 F000D701 F000E000    D701E000 F0004B20 C27A1222 4740C154  *.0A.P...0.P.0...P...0...B.... A.*
058120    41E2C162 41F2C160 D501E000 F0004740    C1261823 47F0C100 000447F0 C1740001  *.SA..2A.N...0.. A....0A....0A...*
058140    00020004 00430057 0057005A 005E01BD    001041B0 C1EE5820 C2021B33 88200001  *....................A...B.......*
058160    12224780 C20841E3 B00241F2 30001AFF    1AFBD501 E000F000 4720C1B2 41330001  *....B..T...2......N...0...A.....*
058180    41023000 5900C202 4780C17C 47F0C188    1843D201 C206E000 D201E000 F000D201  *......B...A..0A...K.B...K...0.K.*
0581A0    F000C2C6 19324780 C1E81B32 47D0C1E8    41E3B002 41F23000 1AFF1AFB D501E000  *0.B.....AY....AY.T...2......N...*
0581C0    F00C4720 C1B41834 47F0C19E 000C0055    003A0004 C0160017 0027003E 00050002  *0...A....0A....................*
0581E0    0000000A 83D60005 58DD0004 98ECD00C    07FE0000 000432E4 00063F68 00000000  *.....0................U........*
058200    00043310 000432E4 00000000 00000000    00000000 00000000 3104330B 40000005  *.......U..................... ...*
058220    08043310 00000000 0E000000 00000000    0004A6D0 FF024000 00043338 00043340  *...................... ........ *
058240    00000002 00058045 0005851E 0005803A    00000002 00058043 0002400C FF054000  *........................... ... .*
058260    90ECD00C 05C004F0 07004110 C0100511    CFC58304 7FFF0A0E 58BC0010 9110B074  *.......0......................*

058820    50401010 4340A008 12444780 885C4820    A0CE542C 8A9E4780 87FC0620 5A20B010  *. ... ........................*
```

```
LOC  OBJECT CODE    ADDR1 ADDR2  STMT   SOURCE STATEMENT                                        F08APR70   9/17/70

                                 336 *.......................................................... 00031100
                                 337 *                                                            00031200
                                 338 *        ANSWERS FOR THE SIFTING SORT ROUTINE.               00031300
                                 339 *                                                            00031400
                                 340 *        1. THE TWO INSTRUCTIONS:'CH    R2,SIFTDISP' AND 'BE  SIFTEXIT' 00031500
                                 341 *           DETERMINE THE END OF THE SORT.                   00031600
                                 342 *                                                            00031700
                                 343 *        2. THE TWO INSTRUCTIONS: 'LTR  R2,R2' AND 'BM FORWARD' 00031800
                                 344 *           KEEP US FROM BUBBLING TOO FAR BACK.              00031900
                                 345 *                                                            00032000
                                 346 *        3. ONLY ONE SCAN IS REQUIRED FOR ANY SIFTING SORT.  00032100
                                 347 *                                                            00032200
                                 348 *        4. THE ONE (1) WILL BE THE THIRD TO OCCUPY THE LOW END OF THE 00032300
                                 349 *           LIST. THE ACTUAL ORDER WILL BE 67 IST, 2 2ND, AND 1 3RD. 00032400
                                 350 *                                                            00032500
                                 351 *.......................................................... 00032600
```

```
LOC  OBJECT CODE    ADDR1 ADDR2  STMT   SOURCE STATEMENT                                    F08APR70   9/17/70

                                 353 ***********************************************************************  00032800
                                 354 *                                                                        00032900
                                 355 *        SHELL'S METHOD OF SIFTING.                                      00033000
                                 356 *                                                                        00033100
                                 357 *        THIS METHOD IS EXACTLY LIKE SIFTING EXCEPT THAT THE             00033200
                                 358 *        COMPARISONS ARE MADE BETWEEN ITEMS THAT ARE 'M' PLACES          00033300
                                 359 *        APART IN THE LIST. THE VALUE OF 'M' MAY BE CALCULATED AS        00033400
                                 360 *        FOLLOWS: NOTE...'M' IS THE MODIFIER.                            00033500
                                 361 *                                                                        00033600
                                 362 *        INITALLY, 'M' = N/2 (N = NUMBER OF ITEMS TO BE SORTED).         00033700
                                 363 *                                                                        00033800
                                 364 *        FOR THE SECOND AND SUCCESSIVE TIMES, 'M' IS EQUAL TO THE        00033900
                                 365 *        PREVIOUS VALUE OF 'M' DIVIDED BY 2. I.E. M = M/2.               00034000
                                 366 *                                                                        00034100
                                 367 *        SCAN #1; MODIFIER = 6/2 = 3                                     00034200
                                 368 *        COMPARE   #1   #2   #3   SCAN END.                              00034300
                                 369 *                                                                        00034400
                                 370 *          *   5    5<   1    1    1                                     00034500
                                 371 *          D   6    6    6<   2    2                                     00034600
                                 372 *          A   4    4    4    4<   3                                     00034700
                                 373 *          T   1    1<   5    5    5                                     00034800
                                 374 *          A   2    2    2<   6    6                                     00034900
                                 375 *          *   3    3    3    3<   4                                     00035000
                                 376 *                                                                        00035100
                                 377 *        SCAN #2; MODIFIER = 3/2 = 1                                     00035200
                                 378 *        COMPARE   #1   #2   #3   #4   #5   #6   #7  SCAN END.           00035300
                                 379 *                                                                        00035400
                                 380 *          *   1    1<   1    1    1    1    1    1    1                  00035500
                                 381 *          D   2    2<   2<   2    2    2    2    2    2                  00035600
                                 382 *          A   3    3    3<   3<   3    3    3    3<   3                  00035700
                                 383 *          T   5    5    5    5<   5<   5    5<   4<   4                  00035800
                                 384 *          A   6    6    6    6    6<   6<   4<   5    5                  00035900
                                 385 *          *   4    4    4    4    4    4<   6    6    6                  00036000
                                 386 *                                                                        00036100
                                 387 *        SCAN #3; MODIFIER = 1/2 =0; NO SCAN REQUIRED, END OF SORT.      00036200
                                 388 *                                                                        00036300
                                 389 ***********************************************************************  00036400
```

```
 LOC  OBJECT CODE     ADDR1 ADDR2  STMT   SOURCE STATEMENT                                          F08APR70   9/17/70

00017A 41BC C1EE             001F4   391          LA    R11,SHELLDAT        ADDR. OF TABLE OF DATA.                00036600
00017E 5820 C202             00208   392          L     R2,NUMBER           NUMBER OF ITEMS                        00036700
000182 1B33                          393 RESET    SR    R3,R3               INDEX = 0                              00036800
000184 8820 0001             00001   394          SRL   R2,1                MODIFIER = MODIFIER/2                  00036900
000188 1222                          395          LTR   R2,R2               IF MODIFIER = 0,                       00037000
00018A 4780 C208             0020E   396          BZ    FINISHED             SORT IS FINISHED.                     00037100
00018E 41E3 B002             00002   397 SHELLOOP LA    R14,L'SHELLDAT(R3,R11)                                    00037200
000192 41F2 3000             00000   398          LA    R15,0(R2,R3)        GENERATE THE ADDRESSES OF THE ITEMS    00037300
000196 1AFF                          399          AR    R15,R15              TO BE COMPARED.                       00037400
000198 1AFB                          400          AR    R15,R11                                                    00037500
00019A D501 E000 F000 00000 00000    401          CLC   0(L'SHELLDAT,R14),0(R15)                                   00037600
0001A0 4720 C1B2             001B8   402          BH    EXCHANGE            IF OUT OF SEQUENCE, EXCHANGE THEM.     00037700
0001A4 4133 0001             00001   403 BUMP     LA    R3,1(R3)            BUMP THE INDEX.                        00037800
0001A8 4102 3000             00000   404          LA    R0,0(R2,R3)                                                00037900
0001AC 5900 C202             00208   405          C     R0,NUMBER           IF THE INDEX SENDS US OFF THE END,     00038000
0001B0 4780 C17C             00182   406          BE    RESET                GO BACK TO START (LOSE TWO TURNS).    00038100
0001B4 47F0 C188             0018E   407          B     SHELLOOP                                                   00038200
0001B8 1843                          408 EXCHANGE LR    R4,R3               REMEMBER WHERE WE ARE.                 00038300
0001BA D201 C206 E000 0020C 00000    409 EXCH     MVC   SHELTER,0(R14)      SWAP TWO ITEMS.                        00038400
0001C0 D201 E000 F000 00000 00000    410          MVC   0(L'SHELLDAT,R14),0(R15)                                   00038500
0001C6 D201 F000 C206 00000 0020C    411          MVC   0(L'SHELLDAT,R15),SHELTER                                  00038600
0001CC 1932                          412          CR    R3,R2               IF INDEX = MODIFIER (RUNNING OFF LOW   00038700
0001CE 4780 C1E8             001EE   413          BE    CONT                 END), END OF BACKWARD SCAN.           00038800
0001D2 1B32                          414          SR    R3,R2               OTHERWISE, GO BACK SOME SPACE(S)       00038900
0001D4 47D0 C1E8             001EE   415          BNP   CONT                                                       00039000
0001D8 41E3 B002             00002   416          LA    R14,L'SHELLDAT(R3,R11)                                    00039100
0001DC 41F2 3000             00000   417          LA    R15,0(R2,R3)        GENERATE TWO MORE ADDRESSES.           00039200
0001E0 1AFF                          418          AR    R15,R15                                                    00039300
0001E2 1AFB                          419          AR    R15,R11                                                    00039400
0001E4 D501 E000 F000 00000 00000    420          CLC   0(L'SHELLDAT,R14),0(R15)                                   00039500
0001EA 4720 C1B4             001BA   421          BH    EXCH                AND CONTINUE THE SORT.                 00039600
0001EE 1834                          422 CONT     LR    R3,R4               RETURN TO HIGHEST LEVEL ATTAINED.      00039700
0001F0 47F0 C19E             001A4   423          B     BUMP                 AND GO BUMP IT ONE.                   00039800
                                     424 *                                                                          00039900
                                     425 *        DATA LIST FOR SHELL'S MODIFICATION.                               00040000
0001F4 000C0055003A0004              426 SHELLDAT DC    H'12,85,58,4,22,23,39,62,5,2'                              00040100
000208 C000000A                      427 NUMBER   DC    A((*-SHELLDAT)/L'SHELLDAT)                                 00040200
00020C                               428 SHELTER  DS    H                   TEMPORARY AREA FOR SWAPPING            00040300

                                     430 ************************************************************************* 00040500
                                     431 *                                                                          00040600
                                     432 *        ANSWER THESE QUESTIONS ABOUT SHELL'S METHOD OF SIFTING.           00040700
                                     433 *                                                                          00040800
                                     434 *        1. WHAT WILL BE THE VALUE OF THE MODIFIER (M) DURING THE 3RD      00040900
                                     435 *           SCAN ?                                                         00041000
                                     436 *                                                                          00041100
                                     437 *        2. HOW MANY SCANS WILL IT TAKE TO SORT 'SHELLDAT' ?               00041200
                                     438 *                                                                          00041300
                                     439 *        3. WHICH INSTRUCTION(S) KEEP TRACK OF THE HIGHEST ADDRESS         00041400
                                     440 *           REACHED WHEN WE BEGIN A BACKWARD SCAN ?                        00041500
                                     441 *                                                                          00041600
                                     442 *        4. WHICH WILL BE THE FIRST 2 NUMBERS COMPARED ON THE 2ND          00041700
                                     443 *           SCAN (POSITIONAL VALUES, E.G. 3RD AND 9TH) ?                   00041800
                                     444 *                                                                          00041900
                                     445 ************************************************************************* 00042000
```

```
F.P. REGS.  80.001C80 0001D0DC   00.01D11C 00000000   00.01B1C8 0C0647C8   00.000000 000000C0

REGS 0-7     0000000A 00063FF8 00C00000 00000000    00000007 00000001 00000012 00058045
REGS 8-15    00000014 00058044 00000002 000581CC    6F057FDE 000581F4 000581D6 000581DE

000000    00000000 00000000 00000000 00000000    00057FD8 00000000 FF060000 80000000  *....................Q............*
000020    FFA50003 6F007588 FFA50001 4F0581E8    0000FF00 00000000 FF050234 90068520  *................Y................*
000040    0001B650 0C000000 000014D0 00005920    083C2F00 0000996C C0040000 00007498  *................................*
000060    00040000 00007BC8 00040000 00007588    00000000 00012D10 00040000 0000751A  *........H.......................*

057FC0    96204177 000847FC 96085870 9C6647F0    95C6D500 9CD59CA7 90ECD00C 05C041F0  *.......0.......0.FN..N.........0*
057FE0    C21650FD 000850DF 000418DF D703D008    D00858F0 C26AD201 F000C022 47F0C024  *B............P......0B.K.0....0..*
058000    07FE989B C26E9867 C2621889 1858D501    50008000 47D0C03C 18588786 C030D201  *....B...B.....N................K.*
058020    C0685000 D2015000 9000D201 9000C068    879ACC28 000147F0 C06A0010 00130016  *....K.....K............0........*
058040    00190021 00290021 41400010 41500008    9601C0FC 9602C0FC 41800002 11884168  *......... ......................*
058060    00024186 00021946 4740C0A4 41E6C0EA    41F8C0EA D501E000 F0004720 C0CA47F0  *......... ...W...8..N...0......0*
058080    C0809101 C0FC4780 C0E44650 C0B447F0    C0E494FE C0FC9102 C0FC4780 C07694FD  *.........U.....0.U.............*
0580A0    C0FC1B88 47F0C080 D701E000 F000D701    F000E000 D701E00C F0009601 C0FC47F0  *.....0..P...0.P.0...P...0......0*
0580C0    C0800003 47F0C0FE 0002000F 00130015    00190025 00280041 00630020 1B224920  *.....0..........................*
0580E0    C1724780 C15A4132 C00241E2 C16241F2    C160D501 E000F000 4740C126 41220002  *A...A......SA..2A.N...0.. A.....*
058100    47F0C100 D701E000 F000D701 F000E000    D701E000 F0004B20 C27A1222 4740C154  *.0A.P...0.P.0...P...0...B.... A.*
058120    41E2C162 41F2C160 D5C1E000 F0004740    C1261823 47F0C100 000447F0 C1740001  *.SA..2A.N...0.. A....0A....0A...*
058140    00020004 00430057 0057005A 005E01BD    001041B0 C1EE5820 C2021B33 88200001  *......................A...B.......*
058160    12224780 C20841E3 B00241F2 30001AFF    1AFBD501 E000F000 4720C1B2 41330001  *....B..T...2......N...0...A.....*
058180    41023000 5900C202 4780C17C 47F0C188    1843D201 C206E000 D201E000 F000D201  *......B...A..0A...K.B...K...0.K.*
0581A0    F000C206 19324780 C1E81B32 47D0C1E8    41E3B002 41F23000 1AFF1AFB D501E000  *0.B.....AY....AY.T...2......N...*
0581C0    F0004720 C1B41834 47F0C19E 000C0000    00000002 00050455 1700273A 3E001600  *0...A....0A.....................*
0581E0    0000000A 16000005 58DD0004 98ECD00C    07FE0000 000432E4 00063F68 00000000  *........................U........*
058200    00043310 000432E4 00000000 00000000    00000000 00000000 3104330B 40000005  *.......U..................... ...*
058220    08043310 00000000 0E000000 00000000    0004A6D0 FF024000 00043338 00043340  *...................... ........ *
058240    00000002 00058045 0005851E 0005803A    00000002 00058043 0002400C FF054000  *........................... ... .*
058260    9CECD00C 05C004F0 07004110 C0100511    0F058304 7FFF0A0E 58B00010 911CB074  *.......0........................*

058820    50401010 4340A008 12444780 885C4820    A00E5420 8A9E4780 87FC0620 5A20B010  *. ... ........................*
```

312

**********

```
LOC   OBJECT CODE    ADDR1 ADDR2  STMT   SOURCE STATEMENT                                    F08APR70   9/17/70

                                  447 *.......................................................... 00042200
                                  448 *                                                          00042300
                                  449 *        ANSWERS FOR THE SHELL'S METHOD SORT.              00042400
                                  450 *                                                          00042500
                                  451 *        1. THE MODIFIER (M) WILL BE EQUAL TO 1 ON THE 3RD SCAN.  00042600
                                  452 *           5 FOR SCAN 1, 2 FOR SCAN 2 AND 1 FOR SCAN 3.   00042700
                                  453 *                                                          00042800
                                  454 *        2. THERE WILL BE THREE SCANS ALTOGETHER.          00042900
                                  455 *                                                          00043000
                                  456 *        3. THE INSTRUCTION 'EXCHANGE LR   R4,R3' KEEPS TRACK OF THE  00043100
                                  457 *           MOST FORWARD POINT REACHED DURING THE SCAN.    00043200
                                  458 *                                                          00043300
                                  459 *        4. THE FIRST AND THIRD VALUES IN THE LIST, SINCE THE MODIFIER  00043400
                                  460 *           IS EQUAL TO 2 DURING THE SECOND SCAN.          00043500
                                  461 *                                                          00043600
                                  462 *.......................................................... 00043700
00020E 0005                       463 FINISHED DC    H'5'                                        00043800
000210 58DD 0004          00004   464          L     R13,4(R13)                                  00043900
000214 98EC D00C          0000C   465          LM    R14,R12,12(R13)                             00044000
000218 07FE                       466          BR    R14                                         00044100
00021C                            467 SAVEAREA DS    18F                                         00044200
                                  468          END                                               00044300
000268 000000020000006D           469               =A(2,INPTEND-1)
000270 00000000                   470               =V(PCHKRETN)
000274 0000006200000002           471               =A(INPUT,2,INPTEND-3)
000280 0002                       472               =AL2(L'SIFTDATA)
```

9/17/70

| POS.ID | REL.ID | FLAGS | ADDRESS |
|---|---|---|---|
| 01 | 01 | 0C | 00026C |
| 01 | 01 | 0C | 000274 |
| 01 | 01 | 0C | 00027C |
| 01 | 02 | 1C | 000270 |

9/17/70

| SYMBOL | LEN | VALUE | DEFN | REFERENCES | | | | | | | | | | | | | |
|---|---|---|---|---|---|---|---|---|---|---|---|---|---|---|---|---|---|
| BR14 | 00002 | 000028 | 00032 | 0030 | 0031 | | | | | | | | | | | | |
| BUMP | 00004 | 0001A4 | 00403 | 0423 | | | | | | | | | | | | | |
| COMPARE | 00006 | 000036 | 00077 | 0080 | | | | | | | | | | | | | |
| CONT | 00002 | 0001EE | 00422 | 0413 | 0415 | | | | | | | | | | | | |
| EXCH | 00006 | 0001BA | 00409 | 0421 | | | | | | | | | | | | | |
| EXCHANGE | 00002 | 0001B8 | 00408 | 0402 | | | | | | | | | | | | | |
| FINISHED | 00002 | 00020E | 00463 | 0396 | | | | | | | | | | | | | |
| FORWARD | 00002 | 00015A | 00310 | 0305 | | | | | | | | | | | | | |
| INPTEND | 00001 | 00006E | 00094 | 0067 | 0071 | 0469 | 0471 | | | | | | | | | | |
| INPUT | 00002 | 000062 | 00093 | 0067 | 0471 | | | | | | | | | | | | |
| INTRCHNG | 00006 | 0000D0 | 00207 | 0195 | | | | | | | | | | | | | |
| LINETEMP | 00002 | 00006E | 00095 | 0085 | 0087 | | | | | | | | | | | | |
| LOWER | 00004 | 000042 | 00080 | 0078 | | | | | | | | | | | | | |
| NUMBER | 00004 | 000208 | 00427 | 0392 | 0405 | | | | | | | | | | | | |
| PAIREND | 00001 | 000102 | 00216 | 0182 | 0218 | | | | | | | | | | | | |
| PAIRLIST | 00002 | 0000F0 | 00215 | 0182 | 0182 | 0186 | 0188 | 0189 | 0192 | 0193 | 0194 | 0207 | 0208 | 0209 | 0218 | 0218 | |
| PAIRLOOP | 00004 | 00007C | 00185 | 0203 | | | | | | | | | | | | | |
| PAIRLP1 | 00004 | 000086 | 00188 | 0196 | 0206 | 0211 | | | | | | | | | | | |
| PAIRNUMB | 00001 | 000008 | 00218 | 0183 | | | | | | | | | | | | | |
| PAIROUT | 00002 | 0000EA | 00212 | 0198 | 0200 | | | | | | | | | | | | |
| PAIRSW1 | 00001 | 000001 | 00219 | 0184 | 0197 | 0201 | 0210 | | | | | | | | | | |
| PAIRSW2 | 00001 | 000002 | 00220 | 0185 | 0202 | 0204 | | | | | | | | | | | |
| PAIRTEST | 00004 | 0000AA | 00197 | 0191 | | | | | | | | | | | | | |
| PASTINTG | 00002 | 000104 | 00250 | 0213 | | | | | | | | | | | | | |
| PASTLINE | 00002 | 000070 | 00096 | 0091 | | | | | | | | | | | | | |
| RESET | 00002 | 000182 | 00393 | 0406 | | | | | | | | | | | | | |
| REVERSE | 00006 | 00012C | 00300 | 0297 | 0309 | | | | | | | | | | | | |
| R0 | 00001 | 000000 | 00003 | 0404 | 0405 | | | | | | | | | | | | |
| R1 | 00001 | 000001 | 00004 | | | | | | | | | | | | | | |
| R10 | 00001 | 00000A | 00013 | 0088 | | | | | | | | | | | | | |
| R11 | 00001 | 00000B | 00014 | 0067 | 0391 | 0397 | 0400 | 0416 | 0419 | | | | | | | | |
| R12 | 00001 | 00000C | 00015 | 0019 | 0020 | 0021 | 0465 | | | | | | | | | | |
| R13 | 00001 | 00000D | 00016 | 0019 | 0023 | 0024 | 0025 | 0026 | 0026 | 0464 | 0464 | 0465 | | | | | |
| R14 | 00001 | 00000E | 00017 | 0019 | 0032 | 0192 | 0194 | 0207 | 0208 | 0209 | 0294 | 0296 | 0300 | 0301 | 0302 | 0306 | 0308 | 0397 |
| | | | | 0401 | 0409 | 0410 | 0416 | 0420 | 0465 | 0466 | | | | | | | |
| R15 | 00001 | 00000F | 00018 | 0022 | 0023 | 0024 | 0025 | 0029 | 0030 | 0193 | 0194 | 0207 | 0208 | 0209 | 0295 | 0296 | 0300 | 0301 |
| | | | | 0302 | 0307 | 0308 | 0398 | 0399 | 0399 | 0400 | 0401 | 0410 | 0411 | 0417 | 0418 | 0418 | 0419 | 0420 |
| R2 | 00001 | 000002 | 00005 | 0290 | 0290 | 0291 | 0293 | 0294 | 0295 | 0298 | 0298 | 0303 | 0304 | 0304 | 0306 | 0307 | 0310 | 0392 |
| | | | | 0394 | 0395 | 0395 | 0398 | 0404 | 0412 | 0414 | 0417 | | | | | | | |
| R3 | 00001 | 000003 | 00006 | 0293 | 0310 | 0393 | 0393 | 0397 | 0398 | 0403 | 0403 | 0404 | 0408 | 0412 | 0414 | 0416 | 0417 | 0422 |
| R4 | 00001 | 000004 | 00007 | 0182 | 0190 | 0408 | 0422 | | | | | | | | | | | |
| R5 | 00001 | 000005 | 00008 | 0073 | 0077 | 0079 | 0085 | 0086 | 0183 | 0199 | | | | | | | | |
| R6 | 00001 | 000006 | 00009 | 0071 | 0080 | 0188 | 0189 | 0190 | 0192 | | | | | | | | | |
| R7 | 00001 | 000007 | 00010 | 0071 | | | | | | | | | | | | | | |
| R8 | 00001 | 000008 | 00011 | 0072 | 0073 | 0077 | 0079 | 0080 | 0186 | 0187 | 0187 | 0188 | 0189 | 0193 | 0205 | 0205 | | |
| R9 | 00001 | 000009 | 00012 | 0067 | 0072 | 0086 | 0087 | 0088 | | | | | | | | | | |
| SAVEAREA | 00004 | 00021C | 00467 | 0022 | | | | | | | | | | | | | | |
| SHELLDAT | 00002 | 0001F4 | 00426 | 0391 | 0397 | 0401 | 0410 | 0411 | 0416 | 0420 | 0427 | 0427 | | | | | | |
| SHELLOOP | 00004 | 00018E | 00397 | 0407 | | | | | | | | | | | | | | |
| SHELLSTR | 00002 | 00017A | 00318 | 0314 | | | | | | | | | | | | | | |
| SHELTER | 00002 | 00020C | 00428 | 0409 | 0411 | | | | | | | | | | | | | |
| SIFTDATA | 00002 | 000166 | 00316 | 0293 | 0294 | 0294 | 0295 | 0296 | 0298 | 0300 | 0301 | 0302 | 0303 | 0306 | 0306 | 0307 | 0308 | 0317 |
| | | | | 0317 | 0472 | | | | | | | | | | | | | |
| SIFTDISP | 00002 | 000178 | 00317 | 0291 | 0317 | | | | | | | | | | | | | |
| SIFTEXIT | 00002 | 000160 | 00313 | 0292 | | | | | | | | | | | | | | |

9/17/70

```
SYMBOL    LEN  VALUE  DEFN     REFERENCES

SIFTLOOP 00004 000106 00291   0299  0311
SORTPASS 00004 00002E 00071   0088
SORTSUPL 00001 000000 00001
SW       00001 000102 00217   0184  0185  0197  0201  0202  0204  0210


NO STATEMENTS FLAGGED IN THIS ASSEMBLY
*STATISTICS*     SOURCE RECORDS (SYSIN) =   443      SOURCE RECORDS (SYSLIB) =    25
*OPTIONS IN EFFECT*   LIST, NODECK, LOAD, NORENT, XREF, NOTEST, ALGN, OS, LINECNT =  55
  555 PRINTED LINES
```

```
 F44-LEVEL LINKAGE EDITOR OPTIONS SPECIFIED MAP,LET,LIST,NCAL
           VARIABLE OPTIONS USED -  SIZE=(45056,6144)-          DEFAULT OPTION(S) USED
IEW0000              ENTRY UTILITY

                                                  MODULE MAP

  CONTROL SECTION                        ENTRY

    NAME     ORIGIN  LENGTH                NAME   LOCATION     NAME   LOCATION     NAME   LOCATION     NAME   LOCATION

  SORTSUPL       00     282
  UTILITY       288     5A0
                                         PRINT        2EA    PCHKRETN     546

 ENTRY ADDRESS       288
 TOTAL LENGTH        828

****GO        DOES NOT EXIST BUT HAS BEEN ADDED TO DATA SET
```

```
 QQQQQQQQQQ   UU         UU  EEEEEEEEEEEE
QQQQQQQQQQQQ  UU         UU  EEEEEEEEEEEE
QQ        QQ  UU         UU  EE
QQ        QQ  UU         UU  EE
QQ        QQ  UU         UU  EE
QQ        QQ  UU         UU  EEEEEEEE
QQ        QQ  UU         UU  EEEEEEEE
QQ    QQ  QQ  UU         UU  EE
QQ     QQ QQ  UU         UU  EE
QQ      QQQQ  UU         UU  EE
QQQQQQQQQQQQ  UUUUUUUUUUUUUU  EEEEEEEEEEEE
 QQQQQQQQ QQ   UUUUUUUUUUUU   EEEEEEEEEEEE
```

```
 SSSSSSSSSS   UU         UU  PPPPPPPPPPPP   LL
SSSSSSSSSSSS  UU         UU  PPPPPPPPPPPPP  LL
SS        SS  UU         UU  PP         PP  LL
SS            UU         UU  PP         PP  LL
SSS           UU         UU  PP         PP  LL
 SSSSSSSSS    UU         UU  PPPPPPPPPPPPP  LL
  SSSSSSSSS   UU         UU  PPPPPPPPPPPP   LL
         SSS  UU         UU  PP             LL
          SS  UU         UU  PP             LL
SS        SS  UU         UU  PP             LL
SSSSSSSSSSSS  UUUUUUUUUUUUUU  PP             LLLLLLLLLLLL
 SSSSSSSSSS    UUUUUUUUUUUU   PP             LLLLLLLLLLLL
```

```
 9999999999
999999999999
99        99
99        99
99        99
999999999999
999999999999
          99
          99
99        99
999999999999
 9999999999
```



**********

```
SYMBOL   TYPE ID  ADDR   LENGTH LD ID

QUEUEING  SD  01 000000 0001DC
PCHKRETN  ER  02
```

```
 LOC  OBJECT CODE    ADDR1 ADDR2  STMT   SOURCE STATEMENT                                          F08APR70   9/17/70

000000                                1 QUEUEING CSECT                                                          00000100
                                      2          COPY  MHMBEGIN                                                 00000200
000000                                3 R0       EQU   0                                                        00000700
000001                                4 R1       EQU   1                                                        00000800
000002                                5 R2       EQU   2                                                        00000900
000003                                6 R3       EQU   3                                                        00001000
000004                                7 R4       EQU   4                                                        00001100
000005                                8 R5       EQU   5                                                        00001200
000006                                9 R6       EQU   6                                                        00001300
000007                               10 R7       EQU   7                                                        00001400
000008                               11 R8       EQU   8                                                        00001500
000009                               12 R9       EQU   9                                                        00001600
00000A                               13 R10      EQU   10                                                       00001700
00000B                               14 R11      EQU   11                                                       00001800
00000C                               15 R12      EQU   12                                                       00001900
00000D                               16 R13      EQU   13                                                       00002000
00000E                               17 R14      EQU   14                                                       00002100
00000F                               18 R15      EQU   15                                                       00002200
000000 90EC D00C            0000C    19          STM   R14,R12,12(R13)     SAVE THE CALLER'S REGISTERS          00002400
000004 05C0                          20          BALR  R12,0               ESTABLISH PROGRAM BASE               00002500
000006                               21          USING *,R12               LET THE ASSEMBLER KNOW.              00002600
000006 41F0 C08E            00094    22          LA    R15,SAVEAREA        ADDRESS OF MY SAVE AREA              00002700
00000A 50FD 0008            00008    23          ST    R15,8(R13)          BACKWARD CHAIN                       00002800
00000E 50DF 0004            00004    24          ST    R13,4(R15)          FORWARD CHAIN                        00002900
000012 18DF                          25          LR    R13,R15             ESTABLISH MY SAVE AREA               00003000
000014 D703 D008 D008 00008 00008    26          XC    8(4,R13),8(R13)     TERMINATE THE FORWARD CHAIN          00003100
                                     27 *        END OF STANDARD ENTRY LINKAGE CONVENTIONS.                     00003200
                                     28          PRINT OFF                                                      00000300
```

```
LOC  OBJECT CODE    ADDR1 ADDR2  STMT   SOURCE STATEMENT                                    F08APR70   9/17/70

                                  35 ***********************************************************************  00001000
                                  36 *                                                                       00001100
                                  37 *        THIS CODE TESTS ALL THE QUEUEING ROUTINES. IT LINKS TO EACH    00001200
                                  38 *        4 TIMES. IT WILL ADD 2 ELEMENTS TO THE QUEUE, TAKE A DUMP,     00001300
                                  39 *        ADD A THIRD ELEMENT, TAKE ANOTHER DUMP, REMOVE THE FIRST       00001400
                                  40 *        ELEMENT FROM THE QUEUE, AND TAKE ANOTHER DUMP. THIS            00001500
                                  41 *        SEQUENCE ALLOWS YOU TO SEE THE CONTENTS OF EACH QUEUE AS IT    00001600
                                  42 *        IS BEING BUILT.                                                00001700
                                  43 *                                                                       00001800
                                  44 ***********************************************************************  00001900


                                  46 ***********************************************************************  00002100
                                  47 ************************* INSTRUCTIONS TO THE READER. ****************  00002200
                                  48 ************************* ------------ -- --- ------- ****************  00002300
                                  49 ***********************************************************************  00002400
                                  50 *                                                                       00002500
                                  51 *        SKIP OVER THIS TEST CASE CODE AND GO RIGHT TO THE PAGE THAT    00002600
                                  52 *        HAS THE HEADING 'DIRECTIONS TO THE STUDENT', TWO PAGES FROM    00002700
                                  53 *        HERE.                                                          00002800
                                  54 *                                                                       00002900
                                  55 ***********************************************************************  00003000

00002A 4150 C0D6            000DC  57 BEGIN    LA    R5,QUINGLST          ADDRESS OF QUEUEING ROUTINE ADDRS.   00003200
00002E 4160 0008            00008  58          LA    R6,8                 INCREMENT.                           00003300
000032 4170 C0ED            000F3  59          LA    R7,QELEMNTS-1        ADDRESS LIST END.                    00003400
000036 4180 0004            00004  60          LA    R8,4                 INCREMENT.                           00003500
00003A 4190 C0F9            000FF  61          LA    R9,BLOCK1-1          ADDRESS OF LIST END.                 00003600
00003E 41A0 C0EE            000F4  62 TESTLOOP LA    R10,QELEMNTS         ADDR. OF ELEMENTS ADDRESS LIST.      00003700
000042 41B0 0002            00002  63          LA    R11,2                LOOP COUNT BEFORE FIRST DUMP.        00003800
000046 581A 0000            00000  64 QENTER   L     R1,0(R10)            ADDRESS OF A QUEUE ELEMENT TO ADD.   00003900
00004A 58F5 0000            00000  65          L     R15,0(R5)            ADDR. OF ENQUEUE SUB-ROUTINE.        00004000
00004E 05EF                        66          BALR  R14,R15              LINK TO ENQUEUE ROUTINE.             00004100
000050 46B0 C050            00056  67          BCT   R11,NODUMP           DUMP ONLY AFTER ADDING 2 ELEMENTS.   00004200
000054 0000                        68          DC    H'0'                                                      00004300
000056 87A8 C040            00046  69 NODUMP   BXLE  R10,R8,QENTER        ADD TOTAL OF THREE ELEMENTS TO Q.    00004400
00005A 0001                        70          DC    H'1'                 DUMP AFTER ADDING 3RD.               00004500
00005C 1B11                        71          SR    R1,R1                RESET PARAMETER REGISTER.            00004600
00005E 58F5 0004            00004  72          L     R15,4(R5)            ADDR. OF DEQUEUE SUB-ROUTINE.        00004700
000062 05EF                        73          BALR  R14,R15              LINK TO DEQUEUE ROUTINE.             00004800
000064 1211                        74          LTR   R1,R1                FIND ONE ?                           00004900
000066 4720 C06A            00070  75          BP    DUMPIT               YES, TAKE A DUMP.                    00005000
00006A 0002                        76          DC    H'2'                 NO, TAKE A DUMP (DEBUG).             00005100
00006C 47F0 C06C            00072  77          B     DUMPIT+2                                                  00005200
000070 0003                        78 DUMPIT  DC    H'3'                                                      00005300
000072 D707 C0FE C0FE 00104 00104  79          XC    BLOCK1+4(8),BLOCK1+4  CLEAR THE                          00005400
000078 D707 C112 C112 00118 00118  80          XC    BLOCK2+4(8),BLOCK2+4   LINK FIELDS                       00005500
00007E D707 C126 C126 0012C 0012C  81          XC    BLOCK3+4(8),BLOCK3+4   IN THE BLOCKS.                    00005600
000084 8756 C038            0003E  82          BXLE  R5,R6,TESTLOOP       LOOP THROUGH ALL ROUTINES.           00005700
000088 58DD 0004            00004  83 RETURN   L     R13,4(R13)           RELOAD SAVE REGISTER ADDRESS.        00005800
00008C 98EC D00C            0000C  84          LM    R14,R12,12(R13)      RELOAD CALLER'S REGISTERS.           00005900
000090 07FE                        85          BR    R14                  RETURN                               00006000
```

```
 LOC   OBJECT CODE    ADDR1 ADDR2  STMT   SOURCE STATEMENT                                          F08APR70   9/17/70

000094                              87 SAVEAREA DS    18F                                                    00006200
0000DC 0000013C00000156             88 QUINGLST DC    A(FIFOENQ2,FIFODEQ2)                                   00006300
0000E4 00000174000G018A             89          DC    A(LIFOENQ1,LIFODEQ1)                                   00006400
0000EC 0000019C000001C2             90          DC    A(PRTYENQ1,PRTYDEQ1)                                   00006500


0000F4 0000010000000114             92 QELEMNTS DC    A(BLOCK1,BLOCK2,BLOCK3)                                00006700
000100 09                           93 BLOCK1   DC    X'09'              PRIORITY                            00006800
000101 000000                       94          DC    AL3(0)                                                 00006900
000104 0000000000000000             95          DC    4F'0'                                                  00007000
000114 01                           96 BLOCK2   DC    X'01'              PRIORITY                            00007100
000115 000000                       97          DC    AL3(0)                                                 00007200
000118 0000000000000000             98          DC    4F'0'                                                  00007300
000128 06                           99 BLOCK3   DC    X'06'              PRIORITY                            00007400
000129 000000                      100          DC    AL3(0)                                                 00007500
00012C 0000000000000000            101          DC    4F'0'                                                  00007600


000000                             103 QELEMENT DSECT                   DUMMY SECTION FOR A QUEUE ELEMENT.   00007800
000000                             104 PRTY     DS    C                  PRIORITY VALUE                      00007900
000001                             105          DS    AL3                                                    00008000
000004                             106 LINKFWRD DS    F                   FORWARD LINK FIELD.                00008100
000008                             107 LINKBKWD DS    F                   BACKWARD LINK FIELD                00008200
00000C                             108          DS    2F                                                     00008300
000004                             109 DISPLFWD EQU   LINKFWRD-QELEMENT  DISPLACEMENT TO FORWARD LINK FIELD. 00008400
000008                             110 DISPLBWD EQU   LINKBKWD-QELEMENT  DISPLACEMENT TO BACKWARD LINK FIELD. 00008500


000000                             112 QUEUEING CSECT                   RESUME CSECT.                        00008700
```

```
LOC  OBJECT CODE    ADDR1 ADDR2  STMT   SOURCE STATEMENT                                    F08APR70   9/17/70

                                 114 ************************************************************************ 00008900
                                 115 ********************** DIRECTIONS TO THE STUDENT. ********************** 00009000
                                 116 ********************** ---------- -- --- -------- ********************** 00009100
                                 117 ************************************************************************ 00009200
                                 118 *                                                                        00009300
                                 119 *        ON THE PAGES THAT FOLLOW, THERE ARE SAMPLES OF THE CODE         00009400
                                 120 *        WHICH MAY BE USED TO PROCESS SEVERAL OF THE DIFFERENT           00009500
                                 121 *        KINDS OF QUEUES THAT WE HAVE JUST DESCRIBED.                    00009600
                                 122 *                                                                        00009700
                                 123 *        FIRST, SCAN OVER THE DESCRIPTION OF THE QUEUE THAT THE          00009800
                                 124 *        CODE IS PROCESSING, AND BE CERTAIN THAT YOU UNDERSTAND          00009900
                                 125 *        WHAT THE QUEUE SHOULD LOOK LIKE.                                00010000
                                 126 *        THEN, LOOK AT THE FIRST OF THE THREE DUMPS THAT FOLLOW          00010100
                                 127 *        THE CODING SAMPLE. THIS DUMP SHOWS THE QUEUE AS IT WILL         00010200
                                 128 *        LOOK AFTER 'BLOCK1' AND 'BLOCK2' HAVE BEEN ADDED. USING         00010300
                                 129 *        THE CODE AND THE DATA IN THIS FIRST DUMP, DRAW A PICTURE        00010400
                                 130 *        OF THE QUEUE AS IT LOOKS NOW. USE THE WORK PAGE SUPPLIED        00010500
                                 131 *        (NEATNESS DOESN'T NECESSARILY COUNT).                           00010600
                                 132 *                                                                        00010700
                                 133 *        THE NEXT THING THAT WILL HAPPEN TO THE QUEUE IS THIS:           00010800
                                 134 *        THE ADDRESS OF 'BLOCK3' WILL BE PASSED TO THE ENQUEUE           00010900
                                 135 *        ROUTINE IN REGISTER 1. IN THE SPACE PROVIDED ON THE             00011000
                                 136 *        WORKSHEET, DRAW THE QUEUE AS IT WILL LOOK WHEN 'BLOCK3'         00011100
                                 137 *        HAS BEEN SUCCESSFULLY ENQUEUED. YOU MAY USE INTUITION           00011200
                                 138 *        OR THE CODE TO FIGURE OUT WHAT IT WILL LOOK LIKE, BUT           00011300
                                 139 *        BE CORRECT.....OR ELSE......                                    00011400
                                 140 *        NOW, CHECK YOUR DIAGRAM AGAINST THE DATA IN THE SECOND          00011500
                                 141 *        DUMP, WHICH HAS 'BLOCK3' ENQUEUED. IF YOUR DIAGRAM DOESN'T      00011600
                                 142 *        MATCH, YOU MAY:                                                 00011700
                                 143 *         A. GO BACK OVER THE CODE AND FIND OUT WHERE YOU WENT ASTRAY.   00011800
                                 144 *         B. WAIL, GNASH YOUR TEETH, AND SHOUT FOR YOUR INSTRUCTOR,      00011900
                                 145 *            WHO WILL LEAD YOU BACK TO THE STRAIGHT PATH....             00012000
                                 146 *                                                                        00012100
                                 147 *        LASTLY, THE DEQUEUE ROUTINE WILL BE LINKED TO, AND AN           00012200
                                 148 *        ELEMENT WILL BE REMOVED FROM THE QUEUE, IN ACCORDANCE           00012300
                                 149 *        WITH THE QUEUE'S METHOD OF PROCESSING. AGAIN, DRAW THE          00012400
                                 150 *        QUEUE AS IT SHOULD LOOK AFTER THE ELEMENT HAS BEEN              00012500
                                 151 *        REMOVED.                                                        00012600
                                 152 *        AS BEFORE, CHECK YOUR DIAGRAM AGAINST THE QUEUE THAT IS IN      00012700
                                 153 *        THE DUMP, AND THEN CHOOSE ONE FROM A. OR B. ABOVE, IF           00012800
                                 154 *        YOUR DIAGRAM DOESN'T MATCH.                                     00012900
                                 155 *                                                                        00013000
                                 156 ************************************************************************ 00013100
```

```
LOC  OBJECT CODE    ADDR1 ADDR2  STMT   SOURCE STATEMENT                                          F08APR70   9/17/70

                                 158 ***********************************************************************  00013300
                                 159 *                                                                      00013400
                                 160 *        THESE ROUTINES PROCESS A DOUBLE HEADED, SINGLE THREADED,      00013500
                                 161 *        FIRST-IN-FIRST-OUT QUEUE.                                     00013600
                                 162 *                                                                      00013700
                                 163 ***********************************************************************  00013800

                                 165 ***********************************************************************  00014000
                                 166 *                                                                      00014100
                                 167 *        ENQUEUE SUBROUTINE.                                           00014200
                                 168 *                                                                      00014300
                                 169 *        ON ENTRY, REGISTER 1 CONTAINS THE ADDRESS OF THE ELEMENT      00014400
                                 170 *        TO BE ENQUEUED.                                               00014500
                                 171 *                                                                      00014600
                                 172 ***********************************************************************  00014700

000000                           174          USING QELEMENT,R2                                             00014900
00013C 5820 C16A        00170    175 FIFOENQ2 L     R2,FIFO2H1T+4      ADDRESS OF LAST ELEMENT.          00015000
000140 5010 C16A        00170    176          ST    R1,FIFO2H1T+4      ADD THE NEW LAST.                 00015100
000144 1222                      177          LTR   R2,R2              WAS THE QUEUE EMPTY ON ENTRY ?    00015200
000146 4770 C14A        00150    178          BNZ   *+10                NO.                              00015300
00014A 5010 C166        0016C    179          ST    R1,FIFO2H1T         YES, PUT NEW ELEMENT AT TOP OF Q. 00015400
00014E 07FE                      180          BR    R14                 AND RETURN.                      00015500
000150 5010 2004        00004    181          ST    R1,LINKFWRD        ENQUEUE THE NEW ONE AT THE END OF Q. 00015600
000154 07FE                      182          BR    R14                 AND RETURN.                      00015700

                                 184 ***********************************************************************  00015900
                                 185 *                                                                      00016000
                                 186 *        DEQUEUE SUBROUTINE.                                           00016100
                                 187 *                                                                      00016200
                                 188 *        ON RETURN REGISTER 1 WILL CONTAIN 0'S OR THE ADDRESS OF THE   00016300
                                 189 *        ELEMENT THAT WAS DEQUEUED.                                    00016400
                                 190 *                                                                      00016500
                                 191 ***********************************************************************  00016600

                                 193          DROP  R2                                                     00016800
000000                           194          USING QELEMENT,R1                                            00016900
000156 41F0 C166        0016C    195 FIFODEQ2 LA    R15,FIFO2H1T       ADDRESS OF QUEUE TO BE USED.      00017000
00015A 581F 0000        00000    196 DEQCOMMN L     R1,0(R15)          ELEMENT AT THE TOP.               00017100
00015E 1211                      197          LTR   R1,R1              WAS THE QUEUE EMPTY ?             00017200
000160 078E                      198          BCR   8,R14               YES, RETURN.                     00017300
000162 D203 F000 1004 00000 00004 199         MVC   0(4,R15),LINKFWRD   NO, REMOVE THE TOP ELEMENT.      00017400
000168 07FE                      200          BR    R14                RETURN                            00017500

00016A 0000
00016C 0000000000000000          202 FIFO2H1T DC    2F'0'              HEAD FOR 2 HEADED, 1 THREADED FIFO Q. 00017700
```

```
LOC  OBJECT CODE    ADDR1 ADDR2  STMT   SOURCE STATEMENT                                    F08APR70   9/17/70
                                 204 ***********************************************************************00017900
                                 205 *                                                                      00018000
                                 206 *        WORKSHEET FOR THE DOUBLE HEADED, SINGLE THREADED, FIFO QUEUE. 00018100
                                 207 *                                                                      00018200
                                 208 *        AFTER 'BLOCK1' AND 'BLOCK2' HAVE BEEN ENQUEUED, THE QUEUE     00018300
                                 209 *        LOOKS LIKE:                                                   00018400
                                 210 *                                                                      00018500
                                 211 *        'FIFO2H1T'                                                    00018600
                                 212 *        +--------+                                                    00018700
                                 213 *        |        |                                                    00018800
                                 214 *        +--------+                                                    00018900
                                 215 *        |        |                                                    00019000
                                 216 *        +--------+                                                    00019100
                                 217 *                                                                      00019200
                                 218 *                                                                      00019300
                                 219 *                                                                      00019400
                                 220 *                                                                      00019500
                                 221 *                                                                      00019600
                                 222 *                                                                      00019700
                                 223 *        AFTER 'BLOCK3' HAS BEEN ENQUEUED, THE QUEUE LOOKS LIKE:       00019800
                                 224 *                                                                      00019900
                                 225 *        'FIFO2H1T'                                                    00020000
                                 226 *        +--------+                                                    00020100
                                 227 *        |        |                                                    00020200
                                 228 *        +--------+                                                    00020300
                                 229 *        |        |                                                    00020400
                                 230 *        +--------+                                                    00020500
                                 231 *                                                                      00020600
                                 232 *                                                                      00020700
                                 233 *                                                                      00020800
                                 234 *                                                                      00020900
                                 235 *                                                                      00021000
                                 236 *                                                                      00021100
                                 237 *        AFTER AN ELEMENT HAS BEEN DEQUEUED, THE QUEUE LOOKS LIKE:     00021200
                                 238 *                                                                      00021300
                                 239 *        'FIFO2H1T'                                                    00021400
                                 240 *        +--------+                                                    00021500
                                 241 *        |        |                                                    00021600
                                 242 *        +--------+                                                    00021700
                                 243 *        |        |                                                    00021800
                                 244 *        +--------+                                                    00021900
                                 245 *                                                                      00022000
                                 246 *                                                                      00022100
                                 247 *                                                                      00022200
                                 248 *                                                                      00022300
                                 249 *                                                                      00022400
                                 250 *                                                                      00022500
                                 251 ***********************************************************************00022600
```

```
F.P. REGS.  00.000000 00000000   00.12C002 02000000   00.040000 0000CB76   00.000000 00010600

REGS 0-7     FFFFFF2E 0005A994 0005A980 00000000    00013E38 0005A95C 00000008 0005A973
REGS 8-15    00000004 0005A97F 0005A978 00000000    6F05A886 0005A914 4F05A8D0 0005A9BC

000000    00000000 00000000 00000000 00000000    0005A880 00000000 FF060000 80000000  *................................*
000020    00040003 50006A3E FFC50001 6F05A8D6    0000FF00 00000000 FE040132 80000A1E  *.........E.....O................*
000040    00067498 0C000001 000014D0 00005920    083D5100 0000996C 00040000 00007498  *................................*
000060    00040000 00007BC8 00040000 00007588    00000000 00012D10 C0040000 0000751A  *.......H........................*

05A880    90ECD00C 05C041F0 C08E50FD 000850DF    000418DF D703D008 D0C858F0 C1D2D201  *.......O............P......OAKK.*
05A8A0    F000C022 47F0C024 07FE4150 C0D64160    00084170 C0ED4180 00044190 C0F941A0  *O....O.......O................9..*
05A8C0    C0EE41B0 0002581A 000058F5 000005EF    46BCC050 000087A8 C0400001 1B1158F5  *...........5............. .....5*
05A8E0    000405EF 12114720 C06A0002 47F0C06C    0003D707 C0FEC0FE D707C112 C112D707  *.............O....P.....P.A.A.P.*
05A900    C126C126 8756C038 58DD0004 98ECD00C    07FEA0B8 5A3040B8 00066F68 00000000  *A.A................... .........*
05A920    41330001 403040BC 417400AC 15674720    C7664156 000147F0 C6C6D200 20005000  *.... . .........G......OFFK.....*
05A940    D6024004 40044780 C77AD202 A0B44004    47F0C68A 92FFA0C0 4170415E 0005A9BC  *O. . ...G.K... ..OF.............*
05A960    0005A9D6 0005A9F4 0005AA0A 0005AA1C    0005AA42 0005A980 0005A994 0005A9A8  *...O...4........................*
05A980    09000000 0005A994 00000000 00000000    00000000 01000000 00000000 00000000  *................................*
05A9A0    00000000 00000000 06000000 00000000    00000000 00000000 00000000 5820C16A  *...............................A.*
05A9C0    5010C16A 12224770 C14A5010 C16607FE    50102004 07FE41F0 C166581F 00001211  *..A.....A...A..........OA.......*
05A9E0    078ED203 F0001004 07FE0000 0005A980    0005A994 5820C18E 5010C18E 50201004  *..K.O..................A...A.....*
05AA00    1222077E 5010C192 07FE41F0 C18E47F0    C1540000 00000000 C0000000 4120C1CA  *......A....OA..OA.............A.*
05AA20    18325822 0004D500 10002000 4720C1B0    12224770 C19AD203 10043004 50130004  *......N.......A.....A.K.........*
05AA4C    07FE5810 C1CE1211 078ED203 C1CE1004    07FE0000 00000000 0005AD1E 41104160  *....A.....K.A..................*
05AA60    90ECD00C 05C004F0 07004110 C0100511    0F05AB04 7FFF0A0E 58B00010 9110B074  *.......O........................*

05B020    4A009BDE 40050000 47F095C6 48609BEE    8A600001 4770969E 48609C26 41660001  *.... ....O.F....................*
```

```
F.P. REGS.  00.000000 00000000   00.12C002 02000000   00.040000 0000CB76   00.000000 0001D600

REGS 0-7     FFFFFF2E 0005A9A8 0005A994 00000000    00013E38 0005A95C 00000008 0005A973
REGS 8-15    00000004 0005A97F 0005A980 FFFFFFFF    6F05A886 0005A914 6F05A8D0 0005A9BC

000000    00000000 00000000 00000000 00000000    0005A880 00000000 FF060000 80000000  *................................*
000020    FFC50003 6F007588 FFC50001 6F05A8DC    0000FF00 00000000 FF060233 80000000  *.E.......E......................*
000040    00003F60 0C000000 000014D0 00005920    083CF200 0000996C 00040000 00007498  *...................2............*
000060    00040000 00007BC8 00040000 00007588    00000000 00012D10 00040000 0000751A  *.......H........................*

05A88C    90ECD00C 05C041F0 C08E50FD 000850DF    000418DF D703D008 D00858F0 C1D2D201  *.......0............P......0AKK.*
05A8A0    F000C022 47F0C024 07FE4150 C0D64160    00084170 C0ED418C 00044190 C0F941A0  *0....0.......0................9..*
05A8C0    C0EE41B0 C002581A 000058F5 000005EF    46B0C050 000087A8 C0400001 1B1158F5  *............5............ .....5*
05A8E0    000405EF 12114720 C06A0002 47F0C06C    00C3D707 C0FEC0FE D707C112 C112D707  *..............0....P.....P.A.A.P.*
05A900    C126C126 8756C038 58DD0004 98ECD00C    07FEA0B8 5A3040B8 00066F68 00000000  *A.A................... .........*
05A920    41330001 403040BC 417400AC 15674720    C7664156 000147F0 C6C6D200 20005000  *.... . .........G......0FFK.....*
05A940    D6024004 40044780 C77AD202 A0B44004    47F0C68A 92FFA0C0 4170415E 0005A9BC  *0. . ...G.K... ..0F.............*
05A960    0005A9D6 0005A9F4 0005AA0A 0005AA1C    00C5AA42 0005A980 0005A994 0005A9A8  *...0...4........................*
05A980    09000000 0005A994 00000000 00000000    00000000 01000000 0005A9A8 00000000  *................................*
05A9A0    00000000 00000000 06000000 00000000    00000000 00000000 00000000 5820C16A  *.............................A.*
05A9C0    501CC16A 12224770 C14A5010 C16607FE    50102004 07FE41F0 C166581F 00001211  *..A.....A...A..........0A.......*
05A9E0    078ED203 F0001004 07FE0000 0005A980    0005A9A8 5820C18E 5010C18E 50201004  *..K.0..................A...A.....*
05AA00    1222077E 5010C192 07FE41F0 C18E47F0    C1540000 00000000 00000000 4120C1CA  *......A....0A..0A..............A.*
05AA20    18325822 0004D500 10002C00 4720C1B0    12224770 C19AD203 10043004 50130004  *......N.......A.....A.K.........*
05AA40    07FE5810 C1CE1211 078ED203 C1CE1004    07FE0000 00000000 0005AD1E 41104160  *....A.....K.A...................*
05AA60    90ECD00C 05C004F0 07004110 C0100511    0F05AB04 7FFF0A0E 58B00010 9110B074  *.......0........................*

05B020    4A009BDE 40050000 47F095C6 48609BEE    8A600001 4770969E 48609C26 41660001  *.... ....0.F....................*
```

```
F.P. REGS.  00.000000 00000000   00.12C002 02000000   00.040000 0000CB76   00.000000 0001D600

REGS 0-7     FFFFFF2E 0005A980 0005A994 00000000    00013E38 0005A95C 00000008 0005A973
REGS 8-15    00000004 0005A97F 0005A980 FFFFFFFF    6F05A886 0005A914 4F05A8E4 0005A9EC

000000    00000000 00000000 00000000 00000000    0005A880 C0000000 FF060000 80000000  *................................*
000020    FFC50003 6F007588 FFC50001 6F05A8F2    0000FF00 00000000 FF060233 80000000  *.E.......E.....2................*
000040    00001360 08000000 00001358 00005920    083C9300 0000996C 00040000 00007498  *................................*
000060    00040000 00007BC8 00040000 00007588    00000000 00012D10 00040000 0000751A  *.......H........................*

05A880    90ECD00C 05C041F0 C08E50FD 000850DF    000418DF D703D008 D00858F0 C1D2D201  *.......0............P......0AKK.*
05A8A0    F000C022 47F0C024 07FE4150 C0D64160    00084170 C0ED4180 00044190 C0F941A0  *0....0.......0................9..*
05A8C0    C0EE41B0 0002581A 000058F5 000005EF    46B0C050 000087A8 C0400001 1B1158F5  *...........5............. .....5*
05A8E0    000405EF 12114720 C06A0002 47F0C06C    0003D707 C0FEC0FE D707C112 C112D707  *.............0....P.....P.A.A.P.*
05A900    C126C126 8756C038 58DD0004 98ECD00C    07FEA0B8 5A3040B8 00066F68 00000000  *A.A.................. .........*
05A920    41330001 403040BC 417400AC 15674720    C7664156 000147F0 C6C6D200 20005000  *.... . .........G......0FFK.....*
05A940    D6024004 40044780 C77AD202 A0B44004    47F0C68A 92FFA0C0 4170415E 0005A9BC  *0. . ...G.K... ..0F.............*
05A960    0005A9D6 0005A9F4 0005AA0A 0005AA1C    0005AA42 0005A98C 0005A994 0005A9A8  *...0...4........................*
05A980    09000000 0005A994 00000000 00000000    00000000 C1000000 0005A9A8 00000000  *................................*
05A9A0    00000000 C0000000 06000000 00000000    00000000 00000000 C0000000 5820C16A  *.............................A.*
05A9C0    5010C16A 12224770 C14A5010 C16607FE    50102004 07FE41F0 C166581F 00001211  *..A.....A...A..........0A.......*
05A9E0    078ED203 F0001004 07FE0000 0005A994    0005A9A8 5820C18E 5010C18E 50201004  *..K.0................A...A.....*
05AA00    1222077E 5010C192 07FE41F0 C18E47F0    C1540000 00000000 00000000 4120C1CA  *......A....0A..0A.............A.*
05AA20    18325822 0004D500 10002000 4720C1B0    12224770 C19AD203 10043004 50130004  *......N.......A.....A.K.........*
05AA40    07FE5810 C1CE1211 078ED203 C1CE1004    07FE0000 00000000 0005AD1E 41104160  *....A.....K.A...................*
05AA60    90ECD00C 05C004F0 07004110 C0100511    0FC5AB04 7FFF0A0E 58B00010 9110B074  *.......0........................*

05B020    4A009BDE 40050000 47F095C6 48609BEE    8A600001 4770969E 48609C26 41660001  *.... ....0.F....................*
```

```
LOC   OBJECT CODE    ADDR1 ADDR2  STMT   SOURCE STATEMENT                                    F08APR70   9/17/70

                                  253 ***********************************************************************  00022800
                                  254 *                                                                      00022900
                                  255 *        THESE ROUTINES PROCESS A DOUBLE HEADED, SINGLE THREADED,      00023000
                                  256 *        LAST-IN-FIRST-OUT QUEUE.                                      00023100
                                  257 *                                                                      00023200
                                  258 ***********************************************************************  00023300

                                  260 ***********************************************************************  00023500
                                  261 *                                                                      00023600
                                  262 *        ENQUEUE SUBROUTINE.                                           00023700
                                  263 *                                                                      00023800
                                  264 *        ON ENTRY, REGISTER 1 CONTAINS THE ADDRESS OF THE ELEMENT      00023900
                                  265 *        TO BE ENQUEUED.                                               00024000
                                  266 *                                                                      00024100
                                  267 ***********************************************************************  00024200

000174 5820 C18E          00194   269 LIFOENQ1 L     R2,LIFO2H1T        CURRENT FIRST ELEMENT.              00024400
000178 5010 C18E          00194   270          ST    R1,LIFO2H1T        ADD NEW TO TOP.                     00024500
00017C 5020 1004          00004   271          ST    R2,LINKFWRD        NEW 1ST POINTS TO OLD 1ST.          00024600
000180 1222                       272          LTR   R2,R2              WAS THE QUEUE EMPTY ?               00024700
000182 077E                       273          BCR   7,R14               NO, RETURN.                        00024800
000184 5010 C192          00198   274          ST    R1,LIFO2H1T+4       YES, ENQUEUE NEW ONE AT BOTTOM OF Q. 00024900
000188 07FE                       275          BR    R14                 AND RETURN.                        00025000

                                  277 ***********************************************************************  00025200
                                  278 *                                                                      00025300
                                  279 *        DEQUEUE SUBROUTINE.                                           00025400
                                  280 *                                                                      00025500
                                  281 *        SAME AS THE DEQUEUE SUBROUTINE FOR DEQUEUEING FROM THE SINGLE 00025600
                                  282 *        THREADED, DOUBLE HEADED FIFO QUEUE. THE TECHNIQUE OF REMOVING 00025700
                                  283 *        AN ELEMENT FROM THE TOP OF A QUEUE IS THE SAME, AS LONG AS    00025800
                                  284 *        THE PHYSICAL ATTRIBUTES OF THE QUEUE ARE THE SAME (HEADING &  00025900
                                  285 *        THREADING).                                                   00026000
                                  286 *                                                                      00026100
                                  287 ***********************************************************************  00026200

00018A 41F0 C18E          00194   289 LIFODEQ1 LA    R15,LIFO2H1T       ADDRESS OF THE QUEUE TO BE USED.    00026400
00018E 47F0 C154          0015A   290          B     DEQCOMMN           BRANCH TO COMMON ROUTINE.           00026500

000192 0000
000194 0000000000000000           292 LIFO2H1T DC    2F'0'              HEAD FOR 2 HEADED, 1 THREADED, LIFO Q 00026700
```

```
LOC  OBJECT CODE    ADDR1 ADDR2  STMT   SOURCE STATEMENT                                    F08APR70   9/17/70

                                 294 ***********************************************************************  00026900
                                 295 *                                                                      00027000
                                 296 *        WORKSHEET FOR THE DOUBLE HEADED, SINGLE THREADED, LIFO QUEUE.  00027100
                                 297 *                                                                      00027200
                                 298 *        AFTER 'BLOCK1' AND 'BLOCK2' HAVE BEEN ADDED, THE QUEUE LOOKS   00027300
                                 299 *        LIKE THIS:                                                    00027400
                                 300 *                                                                      00027500
                                 301 *        'LIFO2H1T'                                                    00027600
                                 302 *        +--------+                                                    00027700
                                 303 *        |        |                                                    00027800
                                 304 *        +--------+                                                    00027900
                                 305 *        |        |                                                    00028000
                                 306 *        +--------+                                                    00028100
                                 307 *                                                                      00028200
                                 308 *                                                                      00028300
                                 309 *                                                                      00028400
                                 310 *                                                                      00028500
                                 311 *                                                                      00028600
                                 312 *        AFTER 'BLOCK3' HAS BEEN ENQUEUED, THE QUEUE LOOKS LIKE:       00028700
                                 313 *                                                                      00028800
                                 314 *        'LIFO2H1T'                                                    00028900
                                 315 *        +--------+                                                    00029000
                                 316 *        |        |                                                    00029100
                                 317 *        +--------+                                                    00029200
                                 318 *        |        |                                                    00029300
                                 319 *        +--------+                                                    00029400
                                 320 *                                                                      00029500
                                 321 *                                                                      00029600
                                 322 *                                                                      00029700
                                 323 *                                                                      00029800
                                 324 *                                                                      00029900
                                 325 *                                                                      00030000
                                 326 *        AFTER AN ELEMENT HAS BEEN DEQUEUED, THE QUEUE LOOKS LIKE:     00030100
                                 327 *                                                                      00030200
                                 328 *        'LIFO2H1T'                                                    00030300
                                 329 *        +--------+                                                    00030400
                                 330 *        |        |                                                    00030500
                                 331 *        +--------+                                                    00030600
                                 332 *        |        |                                                    00030700
                                 333 *        +--------+                                                    00030800
                                 334 *                                                                      00030900
                                 335 *                                                                      00031000
                                 336 *                                                                      00031100
                                 337 *                                                                      00031200
                                 338 *                                                                      00031300
                                 339 *                                                                      00031400
                                 340 *                                                                      00031500
                                 341 ***********************************************************************  00031600
```

```
F.P. REGS.  00.000000 00000000   00.12C002 02000000   00.040000 0000CB76   00.000000 0001D600

REGS 0-7     FFFFFF2E 0005A994 0005A980 00000000    00013E38 0005A964 00000008 C005A973
REGS 8-15    00000004 0005A97F 0005A978 00000000    6F05A886 0005A914 4F05A8D0 0005A9F4

000000    00000000 00000000 00000000 00000000    0005A880 00000000 FF060000 80000000  *................................*
000020    FFC50003 6F007588 FFC50001 6F05A8D6    0000FF00 00000000 FF040233 80004C40  *.E.......E.....0............... *
000040    00001360 08000000 00001358 00005920    083C3E00 0000996C 00040000 00007498  *................................*
000060    00040000 00007BC8 00040000 00007588    00000000 00012D10 00040000 0000751A  *.......H........................*

05A880    90ECD00C 05C041F0 C08E50FD 000850DF    000418DF D703D008 D00858F0 C1D2D201  *.......0............P......0AKK.*
05A8A0    F000C022 47F0C024 07FE4150 C0D64160    00C8417C C0ED4180 0C044190 C0F941AC  *0....0.......0................9..*
05A8C0    C0EE41B0 0002581A 000058F5 000005EF    46BCC050 000087A8 C0400001 1B1158F5  *............5............. .....5*
05A8E0    000405EF 12114720 C06A0002 47F0C06C    0003D707 C0FEC0FE D707C112 C112D707  *.............0....P.....P.A.A.P.*
05A900    C126C126 8756C038 58DD0004 98ECD00C    07FEA0B8 5A3C40B8 00066F68 00000000  *A.A................... .........*
05A920    41330001 403040BC 417400AC 15674720    C7664156 000147F0 C6C6D200 20005000  *.... . .........G......0FFK.....*
05A940    D6024004 40044780 C77AD202 A0B44004    47F0C68A 92FFA0C0 4170415E 0005A9BC  *0. . ...G.K... ..0F.............*
05A960    0005A9D6 0005A9F4 0005AACA 0005AA1C    0005AA42 0005A980 0005A994 0005A9A8  *...0...4........................*
05A980    09000000 00000000 00000000 00000000    00000000 01000000 0005A980 00000000  *................................*
05A9A0    00000000 00000000 06000000 00000000    00000000 00000000 00000000 5820C16A  *...............................A.*
05A9C0    5010C16A 12224770 C14A5010 C16607FE    50102004 07FE41F0 C166581F 00001211  *..A.....A...A..........0A.......*
05A9E0    078ED203 F0001004 07FE0000 0005A994    0005A9A8 5820C18E 5010C18E 50201004  *..K.0.................A...A.....*
05AA00    1222077E 5010C192 07FE41F0 C18E47F0    C1540000 0005A994 0005A980 4120C1CA  *......A....0A..0A.............A.*
05AA20    18325822 0004D5C0 10002000 4720C1B0    12224770 C19AD203 10043004 50130004  *......N.......A.....A.K.........*
05AA40    07FE5810 C1CE1211 078ED203 C1CE1004    07FE0000 00000000 0005AD1E 41104160  *....A.....K.A..................*
05AA60    90ECD00C C5C004F0 07004110 C0100511    0F05AB04 7FFF0A0E 58B00010 9110B074  *.......0........................*

05B020    4A009BDE 40050000 47F095C6 48609BEE    8A600001 4770969E 48609C26 41660001  *.... ....0.F...................*
```

```
F.P. REGS.  00.000000 00000000   00.12C002 02000000   00.040000 0000CB76   00.000000 0001D600

REGS 0-7     FFFFFF2E 0005A9A8 0005A994 00000000    00013E38 0005A964 00000008 0005A973
REGS 8-15    00000004 0005A97F 0005A980 FFFFFFFF    6F05A886 0005A914 6F05A8D0 0005A9F4

000000    00000000 00000000 00000000 00000000    0005A880 00000000 FF060000 80000000  *................................*
000020    FFC50003 6F007588 FFC50001 6F05A8DC    0000FF00 00000000 FF060133 80000000  *.E.......E......................*
000040    00001360 08000C00 00001358 00005920    083BDA00 0000996C 00040000 00007498  *................................*
000060    00040000 00007BC8 00040000 00007588    00000000 00012D10 00040000 0000751A  *.......H........................*

05A880    90ECD00C 05C041F0 C08E50FD 000850DF    000418DF D703D008 D00858F0 C1D2D201  *.......0............P......0AKK.*
05A8A0    F000C022 47F0C024 07FE4150 C0D64160    00084170 C0ED4180 00044190 C0F941A0  *0....0.......0................9..*
05A8C0    C0EE41B0 0002581A 000058F5 000005EF    46BCC050 000087A8 C0400001 1B1158F5  *............5............. .....5*
05A8E0    000405EF 12114720 C06A0002 47F0C06C    0003D707 C0FEC0FE D707C112 C112D707  *.............0....P.....P.A.A.P.*
05A900    C126C126 8756C038 58DD0004 98ECD00C    07FEA0B8 5A304CB8 00066F68 00000000  *A.A.................. .........*
05A920    41330001 403040BC 417400AC 15674720    C7664156 00C147F0 C6C6D200 20005000  *.... . .........G......0FFK.....*
05A940    D6024004 4004478C C77AD202 A0B44004    47F0C68A 92FFA0C0 4170415E 0005A9BC  *0. . ...G.K... ..0F.............*
05A960    0005A9D6 0005A9F4 0005AA0A 0005AA1C    0005AA42 0005A980 0005A994 0005A9A8  *...0...4........................*
05A980    09000000 00000000 00000000 00000000    00000000 01000000 0005A980 00000000  *................................*
05A9A0    00000000 00000000 06000000 0005A994    00000000 00000000 00000000 5820C16A  *...............................A.*
05A9C0    5010C16A 12224770 C14A5010 C16607FE    50102004 07FE41F0 C166581F 00001211  *..A.....A...A..........0A.......*
05A9E0    078ED203 F00C1004 07FE0000 0005A994    0005A9A8 5820C18E 5010C18E 50201004  *..K.0................A...A.....*
05AA00    1222077E 5010C192 07FE41F0 C18E47F0    C1540000 0005A9A8 0005A980 4120C1CA  *......A....CA..0A.............A.*
05AA20    18325822 0004D5C0 10002000 4720C1B0    12224770 C19AD203 10043004 50130004  *......N.......A.....A.K.........*
05AA40    07FE5810 C1CE1211 078ED203 C1CE1004    07FE0000 00000000 0005AD1E 4110416C  *....A.....K.A...................*
05AA60    90ECD00C 05C004F0 07004110 C0100511    0F05AB04 7FFF0A0E 58B00010 9110B074  *.......0........................*

05B020    4AC09BDE 4005C000 47F095C6 48609BEE    8A600001 4770969E 48609C26 41660001  *.... ....0.F....................*
```

```
F.P. REGS.  00.000000 00000000   00.12C002 02000000   00.040000 0000CB76   00.000000 0001D600

REGS 0-7     FFFFFF2E 0005A9A8 0005A994 00000000    00013E38 0005A964 00000008 0005A973
REGS 8-15    00000004 0005A97F 0005A980 FFFFFFFF    6F05A886 0005A914 4F05A8E4 0005AA14

000000    00000000 00000000 00000000 00000000    0005A880 00000000 FF060000 80000000  *................................*
000020    FFC50003 6F007588 FFC50001 6F05A8F2    0000FF00 00000000 FE040235 80000A06  *.E.......E.....2................*
000040    00000000 04000000 000014D0 00005920    083B8500 0000996C 00040000 00007498  *.......................*.........*
000060    00040000 00007BC8 00040000 00007588    00000000 00012D10 00040000 0000751A  *.......H........................*

05A880    90ECD00C 05C041F0 C08E50FD 000850DF    000418DF D703D0C8 DCC858F0 C1D2D2C1  *.......0............P......CAKK.*
05A8A0    F000C022 47F0CC24 07FE4150 C0D64160    00084170 C0ED4180 00044190 C0F941A0  *0....0.......0................9..*
05A8C0    C0EE41B0 0002581A 000058F5 000005EF    46BCC050 000087A8 C0400001 1B1158F5  *............5............ .....5*
05A8E0    000405EF 12114720 C06A0002 47F0C06C    0003D707 CCFEC0FE D707C112 C112D707  *..............0....P.....P.A.A.P.*
05A900    C126C126 8756C038 58DD0004 98ECD00C    07FEA0B8 5A3040B8 0C066F68 00000000  *A.A................... .........*
05A920    41330001 403040BC 417400AC 15674720    C7664156 000147F0 C6C6D200 20005000  *.... . .........G......0FFK.....*
05A940    D6024004 40044780 C77AD202 A0B44004    47F0C68A 92FFA0C0 4170415E 0005A9BC  *0. . ...G.K... ..0F.............*
05A960    0005A9D6 0005A9F4 0005AA0A 0005AA1C    0005AA42 0005A980 0005A994 0005A9A8  *...0...4........................*
05A980    09000000 00000000 00000000 00000000    00000000 01000000 0005A980 00000000  *................................*
05A9A0    00000000 00000000 06000000 0005A994    00000000 00000000 00000000 5820C16A  *...............................A.*
05A9C0    5010C16A 12224770 C14A5010 C16607FE    50102004 07FE41F0 C166581F 00001211  *..A.....A...A..........0A.......*
05A9E0    078ED203 F0001004 07FE0000 0005A994    0005A9A8 5820C18E 5C10C18E 50201004  *..K.0................A...A.....*
05AA00    1222077E 5010C192 07FE41F0 C18E47F0    C1540000 0005A994 0005A980 4120C1CA  *......A....0A..0A.............A.*
05AA20    18325822 0004D500 10002000 4720C1B0    12224770 C19AD203 10043004 50130004  *......N.......A.....A.K.........*
05AA40    07FE5810 C1CE1211 078ED203 C1CE1004    07FE0000 00000000 0005AD1E 41104160  *....A.....K.A...................*
05AA60    90ECD00C 05C004F0 07004110 C0100511    0F05AB04 7FFF0A0E 58B00010 9110B074  *.......0........................*

05B020    4A009BDE 40050000 47F095C6 486C9BEE    8A600001 477C969E 48609C26 41660001  *.... ....0.F....................*
```

```
LOC  OBJECT CODE    ADDR1 ADDR2  STMT   SOURCE STATEMENT                                          F08APR70   9/17/70

                                 343 ***********************************************************************  00031800
                                 344 *                                                                      00031900
                                 345 *        THESE ROUTINES PROCESS A SINGLE HEADED, SINGLE THREADED       00032000
                                 346 *        PRIORITY QUEUE. THE ELEMENTS ARE ORDERED ON THE BASIS         00032100
                                 347 *        OF A ONE-BYTE FIELD NAMED 'PRTY' (PRIORITY).                  00032200
                                 348 *                                                                      00032300
                                 349 ***********************************************************************  00032400


                                 351 ***********************************************************************  00032600
                                 352 *                                                                      00032700
                                 353 *        ENQUEUE SUBROUTINE.                                           00032800
                                 354 *                                                                      00032900
                                 355 *        ON ENTRY, REGISTER 1 CONTAINS THE ADDRESS OF THE ELEMENT      00033000
                                 356 *        TO BE ENQUEUED.                                               00033100
                                 357 *                                                                      00033200
                                 358 ***********************************************************************  00033300

0001C9C 4120 C1CA            001D0  360 PRTYENQ1 LA    R2,PRTY1H1T-DISPLFWD MAKE THE 'HEAD' POINTER LOOK LIKE   00033500
0001A0 1832                         361 PRTYSCH1 LR    R3,R2                THE FIRST ELEMENT IN THE QUEUE.     00033600
0001A2 5822 0004             00004  362          L     R2,DISPLFWD(R2)     GET THE ADDRESS OF THE NEXT ELEMENT. 00033700
0001A6 D500 1000 2000 00000  00000  363          CLC   PRTY,0(R2)          IS THIS THE RIGHT PLACE TO INSERT ?  00033800
0001AC 4720 C1B0             001B6  364          BH    INSERT               YES, GO INSERT THIS ONE.            00033900
0001B0 1222                         365          LTR   R2,R2                NO, IS THIS THE END OF THE QUEUE ?  00034000
0001B2 4770 C19A             001A0  366          BNZ   PRTYSCH1              NO, CONTINUE SEARCHING.            00034100
0001B6 D203 1004 3004 00004  00004  367 INSERT   MVC   LINKFWRD,DISPLFWD(R3) YES, ENQUEUE THIS ONE IN IT'S    00034200
0001BC 5013 0004             00004  368          ST    R1,DISPLFWD(R3)      RIGHTFUL PLACE.........            00034300
0001C0 07FE                         369          BR    R14                  AND RETURN.                        00034400


                                 371 ***********************************************************************  00034600
                                 372 *                                                                      00034700
                                 373 *        DEQUEUE SUBROUTINE.                                           00034800
                                 374 *                                                                      00034900
                                 375 *        ON RETURN REG. 1 CONTAINS 0'S OR THE ADDRESS OF THE DEQUEUED  00035000
                                 376 *        ELEMENT.                                                      00035100
                                 377 *                                                                      00035200
                                 378 ***********************************************************************  00035300

0001C2 5810 C1CE             001D4  380 PRTYDEQ1 L     R1,PRTY1H1T          ELEMENT AT TOP OF QUEUE.            00035500
0001C6 1211                         381          LTR   R1,R1                IS THE QUEUE EMPTY ?                00035600
0001C8 078E                         382          BCR   8,R14                YES, RETURN.                        00035700
0001CA D203 C1CE 1004 001D4  00004  383          MVC   PRTY1H1T,LINKFWRD    NO, DEQUEUE THE FIRST ELEMENT.      00035800
0001D0 07FE                         384          BR    R14                  AND RETURN.                         00035900

0001D2 0000
0001D4 00000000                     386 PRTY1H1T DC    A(0)                                                    00036100
```

```
LOC  OBJECT CODE    ADDR1 ADDR2  STMT   SOURCE STATEMENT                                        F08APR70   9/17/70
                                 388 ***********************************************************************  00036300
                                 389 *                                                                        00036400
                                 390 *        WORKSHEET FOR THE SINGLE HEADED, SINGLE THREADED, PRIORITY Q.   00036500
                                 391 *                                                                        00036600
                                 392 *        AFTER 'BLOCK1' AND 'BLOCK2' HAVE BEEN ENQUEUED, THE QUEUE       00036700
                                 393 *        LOOKS LIKE THIS:                                                00036800
                                 394 *                                                                        00036900
                                 395 *        'PRTY1H1T'                                                      00037000
                                 396 *        +--------+                                                      00037100
                                 397 *        |        |                                                      00037200
                                 398 *        +--------+                                                      00037300
                                 399 *                                                                        00037400
                                 400 *                                                                        00037500
                                 401 *                                                                        00037600
                                 402 *                                                                        00037700
                                 403 *                                                                        00037800
                                 404 *                                                                        00037900
                                 405 *                                                                        00038000
                                 406 *                                                                        00038100
                                 407 *        AFTER 'BLOCK3' HAS BEEN ENQUEUED, THE QUEUE LOOKS LIKE THIS:    00038200
                                 408 *                                                                        00038300
                                 409 *        'PRTY1H1T'                                                      00038400
                                 410 *        +--------+                                                      00038500
                                 411 *        |        |                                                      00038600
                                 412 *        +--------+                                                      00038700
                                 413 *                                                                        00038800
                                 414 *                                                                        00038900
                                 415 *                                                                        00039000
                                 416 *                                                                        00039100
                                 417 *                                                                        00039200
                                 418 *                                                                        00039300
                                 419 *                                                                        00039400
                                 420 *                                                                        00039500
                                 421 *        AFTER AN ELEMENT HAS BEEN DEQUEUED, THE QUEUE LOOKS LIKE THIS:  00039600
                                 422 *                                                                        00039700
                                 423 *        'PRTY1H1T'                                                      00039800
                                 424 *        +--------+                                                      00039900
                                 425 *        |        |                                                      00040000
                                 426 *        +--------+                                                      00040100
                                 427 *                                                                        00040200
                                 428 *                                                                        00040300
                                 429 *                                                                        00040400
                                 430 *                                                                        00040500
                                 431 *                                                                        00040600
                                 432 *                                                                        00040700
                                 433 *                                                                        00040800
                                 434 *                                                                        00040900
                                 435 ***********************************************************************  00041000
                                 436          END                                                             00041100
C001D8 00C00000                  437                =V(PCHKRETN)
```

```
F.P. REGS.  00.000000 00000000   00.12C002 02000000   00.040000 0000CB76   00.000000 0001D600

REGS 0-7     FFFFFF2E 0005A994 00000000 0005A980    00013E38 0005A96C 00000008 0005A973
REGS 8-15    00000004 0005A97F 0005A978 00000000    6F05A886 0005A914 6F05A8D0 0005AA1C

000000    00000000 00000000 00000000 00000000    0005A880 C0000000 FF060000 80000000  *................................*
000020    FFC50003 6F007588 FFC50001 6F05A8D6    0000FF00 00000000 FF060133 80000000  *.E.......E.....O................*
000040    00001360 08000000 00001358 00005920    083B2B00 0000996C 00040000 00007498  *................................*
000060    00040000 00007BC8 00040000 00007588    00000000 00012D10 00040000 0000751A  *.......H........................*

05A880    90ECD00C 05C041F0 C08E50FD 000850DF    000418DF D703D008 D0C858F0 C1D2D201  *.......0............P......0AKK.*
05A8A0    F000C022 47F0C024 07FE4150 C0D64160    00084170 C0ED4180 00044190 C0F941A0  *0....0.......0................9..*
05A8C0    C0EE41B0 0002581A 000058F5 000005EF    46B0C050 000087A8 C0400001 1B1158F5  *............5............. .....5*
05A8E0    00C405EF 12114720 C06A0002 47F0C06C    0003D707 C0FEC0FE D707C112 C112D707  *..............0....P.....P.A.A.P.*
05A900    C126C126 8756C038 58DD0004 98ECD00C    07FEA0B8 5A3040B8 00066F68 00000000  *A.A.................. .........*
05A920    41330001 403040BC 417400AC 15674720    C7664156 00147F0 C6C6D200 20005000  *.... . .........G......CFFK.....*
05A940    D6024004 40044780 C77AD202 A0B44004    47F0C68A 92FFA0C0 4170415E 0005A9BC  *O. . ...G.K... ..0F.............*
05A960    0005A9D6 0005A9F4 0005AA0A 0005AA1C    0005AA42 0005A980 0005A994 0005A9A8  *...O...4........................*
05A980    09000000 0005A994 0000000C 00000000    00000000 01000000 00000000 00000000  *................................*
05A9A0    00000000 00000000 06000000 00000000    00000000 00000000 00000000 5820C16A  *...............................A.*
05A9C0    5010C16A 12224770 C14A5010 C16607FE    50102004 07FE41F0 C166581F 000C1211  *..A.....A...A..........0A.......*
05A9E0    078ED203 F0001004 07FE0000 0005A994    0005A9A8 5820C18E 5010C18E 50201004  *..K.O..................A...A.....*
05AA00    1222077E 5010C192 07FE41F0 C18E47F0    C1540000 0005A994 0005A980 4120C1CA  *......A....0A..0A.............A.*
05AA20    18325822 0004D500 10002000 4720C1B0    12224770 C19AD203 10043004 50130004  *......N.......A.....A.K.........*
05AA40    07FE581C C1CE1211 078ED203 C1CE1004    07FE0000 0005A98C 0005AD1E 41104160  *....A.....K.A...................*
05AA60    90ECD00C 05C004F0 07004110 C0100511    0F05AB04 7FFF0A0E 58B00010 9110B074  *.......0........................*

05B020    4A009BDE 40050000 47F095C6 48609BEE    8A600001 4770969E 48609C26 41660001  *.... ....0.F....................*
```

```
F.P. REGS.  00.000000 00000000   00.12C002 02000000   00.040000 0000CB76   00.000000 0001D600

REGS 0-7     FFFFFF2E 0005A9A8 0005A994 0005A980    00013E38 0005A96C 00000008 0005A973
REGS 8-15    00000004 0005A97F 0005A980 FFFFFFFF    6F05A886 0005A914 6F05A8D0 0005AA1C

000000    00000000 00000000 00000000 00000000    0005A880 00000000 FF060000 80000000  *................................*
000020    FFC50003 6F007588 FFC50001 6F05A8DC    0000FF00 00000000 FF060233 80000000  *.E.......E......................*
000040    00001360 08000000 00001358 00005920    083AC700 0000996C 00040000 00007498  *..................G.............*
000060    00040000 00007BC8 00040000 00007588    00000000 00012D10 00040000 0000751A  *.......H........................*

05A880    90ECD00C 05C041F0 C08E50FD 000850DF    000418DF D703D008 D00858F0 C1D2D201  *.......0............P......0AKK.*
05A8A0    F000C022 47F0C024 07FE4150 C0D64160    00084170 C0ED4180 00044190 C0F941A0  *0....0.......0................9..*
05A8C0    C0EE41B0 0002581A 000058F5 000005EF    46BCC050 000087A8 C0400001 1B1158F5  *............5............ .....5*
05A8E0    000405EF 12114720 C06A0002 47F0C06C    0003D707 C0FEC0FE D707C112 C112D707  *.............0....P.....P.A.A.P.*
05A900    C126C126 8756CC38 58DD0004 98ECD00C    07FEA0B8 5A3040B8 00066F68 00000000  *A.A.................. .........*
05A920    41330001 403040BC 417400AC 15674720    C7664156 000147F0 C6C6D200 20005000  *.... . .........G......0FFK.....*
05A940    D6024004 40044780 C77AD202 A0B440C4    47F0C68A 92FFA0C0 4170415E 0005A9BC  *0. . ...G.K... ..0F.............*
05A960    0005A9D6 0005A9F4 0005AACA 0005AA1C    0005AA42 0005A980 0005A994 0005A9A8  *...0...4........................*
05A980    09000000 0005A9A8 00000000 00000000    00000000 01000000 00000000 00000000  *................................*
05A9A0    00000000 00000000 06000000 0005A994    00000000 00000000 00000000 5820C16A  *...............................A.*
05A9C0    5010C16A 12224770 C14A5010 C16607FE    50102004 07FE41F0 C166581F 00001211  *..A.....A...A..........0A.......*
05A9E0    078ED203 F0001004 C7FE0000 0005A994    0005A9A8 5820C18E 5010C18E 50201004  *..K.0................A...A.....*
05AA00    1222077E 5010C192 07FE41F0 C18E47F0    C1540000 0005A994 0005A980 4120C1CA  *......A....0A..0A.............A.*
05AA20    18325822 0004D500 10002000 4720C1B0    12224770 C19AD203 10043004 50130004  *......N.......A.....A.K.........*
05AA40    07FE5810 C1CE1211 078ED203 C1CE1004    07FE0000 0005A980 0005AD1E 41104160  *....A.....K.A...................*
05AA60    90ECD00C 05C004F0 07004110 C0100511    0F05AB04 7FFF0A0E 58B00010 9110B074  *.......0........................*

05B020    4A009BDE 40050000 47F095C6 48609BEE    8A600001 4770969E 48609C26 41660001  *.... ....0.F....................*
```

```
F.P. REGS.  00.000000 00000000   00.12C002 02000000   00.040000 0000CB76   00.000000 0001D600

REGS 0-7     FFFFFF2E 0005A980 0005A994 0005A980    00013E38 0005A96C 00000008 0005A973
REGS 8-15    00000004 0005A97F 0005A980 FFFFFFFF    6F05A886 0005A914 4F05A8E4 0005AA42

000000    00000000 00000000 00000000 00000000    0005A880 00000000 FF060000 80000000  *................................*
000020    FFC50003 6F007588 FFC50001 6F05A8F2    000CFF00 00000000 FE04000E 80000A1E  *.E.......E.....2................*
000040    0006BD98 08000000 000014D0 00005920    083A6800 0000996C 00040000 00007498  *................................*
000060    00040000 00007BC8 00040000 00007588    00000000 00012D10 00040000 0000751A  *.......H........................*

05A880    90ECD00C 05C041F0 C08E50FD 000850DF    000418DF D703D008 D00858F0 C1D2D201  *.......0............P......0AKK.*
05A8A0    F000C022 47F0C024 07FE4150 C0D64160    00084170 C0ED4180 00044190 C0F941A0  *0....0.......0................9..*
05A8C0    C0EE41B0 0002581A 000058F5 000005EF    46B0C050 000087A8 C0400001 1B1158F5  *...........5............. .....5*
05A8E0    000405EF 12114720 C06A0002 47F0C06C    0003D707 C0FEC0FE D707C112 C112D707  *.............0....P.....P.A.A.P.*
05A900    C126C126 8756C038 58DD0004 98ECD00C    07FEA0B8 5A3040B8 00066F68 00000000  *A.A................... .........*
05A920    41330001 403040BC 417400AC 15674720    C7664156 000147F0 C6C6D200 20005000  *.... . .........G......0FFK.....*
05A940    D6024004 40044780 C77AD202 A0B44004    47F0C68A 92FFA0C0 4170415E 0005A9BC  *0. . ...G.K... ..0F.............*
05A960    0005A9D6 0005A9F4 0005AA0A 0005AA1C    0005AA42 0005A980 0005A994 0005A9A8  *...0...4........................*
05A980    0900C000 0005A9A8 00000000 00000000    00000000 01000000 00000000 00000000  *................................*
05A9A0    00000000 00000000 06000000 0005A994    00000000 00000000 00000000 5820C16A  *...............................A.*
05A9C0    5010C16A 12224770 C14A5010 C16607FE    50102004 07FE41F0 C166581F 00001211  *..A.....A...A..........0A.......*
05A9E0    078ED203 F0001004 07FE0000 0005A994    0005A9A8 5820C18E 5010C18E 50201004  *..K.0..................A...A.....*
05AA00    1222077E 5010C192 07FE41F0 C18E47F0    C1540000 0005A994 0005A980 4120C1CA  *......A....0A..0A..............A.*
05AA20    18325822 0004D500 10002000 4720C1B0    12224770 C19AD203 10043004 50130004  *......N.......A.....A.K.........*
05AA40    07FE5810 C1CE1211 078ED203 C1CE1004    07FE0000 0005A9A8 0005AD1E 41104160  *....A.....K.A...................*
05AA60    90ECD00C 05C004F0 07004110 C0100511    0FC5AB04 7FFF0A0E 58B00010 911CB074  *.......0........................*

05B020    4A009BDE 40050000 47F095C6 48609BEE    8A600001 4770969E 48609C26 41660001  *.... ....0.F....................*
```

9/17/70

| POS.ID | REL.ID | FLAGS | ADDRESS |
|---|---|---|---|
| 01 | 01 | 0C | 0000DC |
| 01 | 01 | 0C | 0000E0 |
| 01 | 01 | 0C | 0000E4 |
| 01 | 01 | 0C | 0000E8 |
| 01 | 01 | 0C | 0000EC |
| 01 | 01 | 0C | 0000F0 |
| 01 | 01 | 0C | 0000F4 |
| 01 | 01 | 0C | 0000F8 |
| 01 | 01 | 0C | 0000FC |
| 01 | 02 | 1C | 0001D8 |

9/17/70

| SYMBOL | LEN | VALUE | DEFN | REFERENCES | | | | | | | | | | | | | |
|---|---|---|---|---|---|---|---|---|---|---|---|---|---|---|---|---|---|
| BEGIN | 00004 | 00002A | 00057 | | | | | | | | | | | | | | |
| BLOCK1 | 00001 | 000100 | 00093 | 0061 | 0079 | 0079 | 0092 | | | | | | | | | | |
| BLOCK2 | 00001 | 000114 | 00096 | 0080 | 0080 | 0092 | | | | | | | | | | | |
| BLOCK3 | 00001 | 000128 | 00099 | 0081 | 0081 | 0092 | | | | | | | | | | | |
| BR14 | 00002 | C00028 | 00032 | 0030 | 0031 | | | | | | | | | | | | |
| DEQCOMMN | 00004 | 00015A | 00196 | 0290 | | | | | | | | | | | | | |
| DISPLBWD | 00004 | 000008 | 00110 | | | | | | | | | | | | | | |
| DISPLFWD | 00004 | 000004 | 00109 | 0360 | 0362 | 0367 | 0368 | | | | | | | | | | |
| DUMPIT | 00002 | 000070 | 00078 | 0075 | 0077 | | | | | | | | | | | | |
| FIFODEQ2 | 00004 | 000156 | 00195 | 0088 | | | | | | | | | | | | | |
| FIFOENQ2 | 00004 | 00013C | 00175 | 0088 | | | | | | | | | | | | | |
| FIFO2H1T | 00004 | 00016C | 00202 | 0175 | 0176 | 0179 | 0195 | | | | | | | | | | |
| INSERT | 00006 | 0001B6 | 00367 | 0364 | | | | | | | | | | | | | |
| LIFODEQ1 | 00004 | 00018A | 00289 | 0089 | | | | | | | | | | | | | |
| LIFOENQ1 | 00004 | 000174 | 00269 | 0089 | | | | | | | | | | | | | |
| LIFO2H1T | 00004 | 000194 | 00292 | 0269 | 0270 | 0274 | C289 | | | | | | | | | | |
| LINKBKWD | 00004 | 000008 | 00107 | 0110 | | | | | | | | | | | | | |
| LINKFWRD | 00004 | 000004 | 00106 | 0109 | 0181 | 0199 | 0271 | 0367 | 0383 | | | | | | | | |
| NODUMP | 00004 | 000056 | 00069 | 0067 | | | | | | | | | | | | | |
| PRTY | 00001 | 000000 | 00104 | 0363 | | | | | | | | | | | | | |
| PRTYDEQ1 | 00004 | 0001C2 | 00380 | 0090 | | | | | | | | | | | | | |
| PRTYENQ1 | 00004 | C0019C | 00360 | 0090 | | | | | | | | | | | | | |
| PRTYSCH1 | 00002 | 0001A0 | 00361 | 0366 | | | | | | | | | | | | | |
| PRTY1H1T | 00004 | 0001D4 | 00386 | 0360 | 0380 | 0383 | | | | | | | | | | | |
| QELEMENT | 00001 | 000000 | 00103 | 0109 | 0110 | 0174 | 0194 | | | | | | | | | | |
| QELEMNTS | 00004 | 0000F4 | 00092 | 0059 | 0062 | | | | | | | | | | | | |
| QENTER | 00004 | 000046 | 00064 | 0069 | | | | | | | | | | | | | |
| QUEUEING | 00001 | 000000 | 00001 | 0112 | | | | | | | | | | | | | |
| QUINGLST | 00004 | 0000DC | 00088 | 0057 | | | | | | | | | | | | | |
| RETURN | 00004 | 000088 | 00083 | | | | | | | | | | | | | | |
| R0 | 00001 | 000000 | 00003 | | | | | | | | | | | | | | |
| R1 | 00001 | 000001 | 00004 | 0064 | 0071 | 0071 | 0074 | 0074 | 0176 | 0179 | 0181 | 0194 | 0196 | 0197 | 0197 | 0270 | 0274 | 0368 |
| | | | | 0380 | 0381 | 0381 | | | | | | | | | | | | |
| R10 | 00001 | 00000A | 00013 | 0062 | 0064 | 0069 | | | | | | | | | | | | |
| R11 | 00001 | 00000B | 00014 | 0063 | 0067 | | | | | | | | | | | | | |
| R12 | 00001 | 00000C | 00015 | 0019 | 0020 | 0021 | 0084 | | | | | | | | | | | |
| R13 | 00001 | 00000D | 00016 | 0019 | 0023 | 0024 | 0025 | 0026 | 0026 | 0083 | 0083 | 0084 | | | | | | |
| R14 | 00001 | 00000E | 00017 | 0019 | 0032 | 0066 | 0073 | 0084 | 0085 | 0180 | 0182 | 0198 | 0200 | 0273 | 0275 | 0369 | 0382 | 0384 |
| R15 | 00001 | 00000F | 00018 | 0022 | 0023 | 0024 | 0025 | 0029 | 0030 | 0065 | 0066 | 0072 | 0073 | 0195 | 0196 | 0199 | 0289 | |
| R2 | 00001 | 000002 | 00005 | 0174 | 0175 | 0177 | 0177 | 0193 | 0269 | 0271 | 0272 | 0272 | 0360 | 0361 | 0362 | 0362 | 0363 | 0365 |
| | | | | 0365 | | | | | | | | | | | | | | |
| R3 | 00001 | 000003 | 00006 | 0361 | 0367 | 0368 | | | | | | | | | | | | |
| R4 | 00001 | 000004 | 00007 | | | | | | | | | | | | | | | |
| R5 | 00001 | 000005 | 00008 | 0057 | 0065 | 0072 | 0082 | | | | | | | | | | | |
| R6 | 00001 | 000006 | 00009 | 0058 | 0082 | | | | | | | | | | | | | |
| R7 | 00001 | 000007 | 00010 | 0059 | | | | | | | | | | | | | | |
| R8 | 00001 | 000008 | 00011 | 0060 | 0069 | | | | | | | | | | | | | |
| R9 | 00001 | 000009 | 00012 | 0061 | | | | | | | | | | | | | | |
| SAVEAREA | 00004 | 000094 | 00087 | 0022 | | | | | | | | | | | | | | |
| TESTLOOP | 00004 | 00003E | 00062 | 0082 | | | | | | | | | | | | | | |

```
STMT  ERROR CODE   MESSAGE                                                                    9/17/70

NO STATEMENTS FLAGGED IN THIS ASSEMBLY
*STATISTICS*     SOURCE RECORDS (SYSIN) =   411      SOURCE RECORDS (SYSLIB) =    25
*OPTIONS IN EFFECT*   LIST, NODECK, LOAD, NORENT, XREF, NOTEST, ALGN, OS, LINECNT =  55
  501 PRINTED LINES
```

```
F44-LEVEL LINKAGE EDITOR OPTIONS SPECIFIED MAP,LET,LIST,NCAL
          VARIABLE OPTIONS USED -  SIZE=(45056,6144)-          DEFAULT OPTION(S) USED
IEW0000             ENTRY UTILITY

                                                MODULE MAP

 CONTROL SECTION                        ENTRY

   NAME    ORIGIN  LENGTH                 NAME   LOCATION     NAME   LOCATION     NAME   LOCATION     NAME   LOCATION

 QUEUEING      00     1DC
 UTILITY      1E0     5A0
                                        PRINT        242    PCHKRETN     49E

ENTRY ADDRESS      1E0
TOTAL LENGTH       780

****GO        DOES NOT EXIST BUT HAS BEEN ADDED TO DATA SET
```

```
PPPPPPPPPPP   PPPPPPPPPPP   DDDDDDDDD                  WW        WW  PPPPPPPPPPP     00000000         11
PPPPPPPPPPPP  PPPPPPPPPPPP  DDDDDDDDDD                 WW        WW  PPPPPPPPPPPP   0000000000       111
PP        PP  PP        PP  DD       DD                WW        WW  PP        PP  00        00     1111
PP        PP  PP        PP  DD        DD               WW        WW  PP        PP  00        00       11
PP        PP  PP        PP  DD        DD               WW        WW  PP        PP  00        00       11
PPPPPPPPPPPP  PPPPPPPPPPPP  DD        DD               WW        WW  PPPPPPPPPPPP  00        00       11
PPPPPPPPPPP   PPPPPPPPPPP   DD        DD               WW   WW   WW  PPPPPPPPPPP   00        00       11
PP            PP            DD        DD               WW  WWWW  WW  PP            00        00       11
PP            PP            DD        DD               WW WW  WW WW  PP            00        00       11
PP            PP            DD       DD                WWWW    WWWW  PP            00        00       11
PP            PP            DDDDDDDDDD                 WWW      WWW  PP             0000000000    1111111111
PP            PP            DDDDDDDDD                  WW        WW  PP              00000000     1111111111
```

```
 9999999999
999999999999
99        99
99        99
99        99
999999999999
999999999999
          99
          99
99        99
999999999999
 9999999999
```



**********

EXTERNAL SYMBOL DICTIONARY

| SYMBOL | TYPE | ID | ADDR | LENGTH | LD ID |
|---|---|---|---|---|---|
| | PC | 01 | 000000 | 000178 | |
| IHCSSQRT | ER | 02 | | | |
| PRINT | ER | 03 | | | |

```
 LOC  OBJECT CODE    ADDR1 ADDR2  STMT   SOURCE STATEMENT                                          F08APR70   9/16/70

000000                                1          CSECT                                                          00000100
000000 90EC D00C            0000C     2          STM   14,12,12(13)   SAVE REGISTERS                            00000200
000004 05C0                           3          BALR  12,0                                                     00000300
000006                                4          USING  *,12                                                    00000400
000006 4110 C072            00078     5          LA    1,SAVIT                                                  00000500
00000A D747 1000 1000 00000 00000     6          XC    0(72,1),0(1)     CLEAR SAVE AREA                         00000600
000010 5010 D008            00008     7          ST    1,8(0,13)                                                00000700
000014 58D0 D008            00008     8          L     13,8(0,13)         SET SAVE POINTER                      00000800
```

```
LOC  OBJECT CODE    ADDR1 ADDR2  STMT   SOURCE STATEMENT                                    F08APR70   9/16/70

                                 11 ************************ I N T R O D U C T I O N ******************** 00001100
                                 12 *                                                                  * 00001200
                                 13 *                                                                  * 00001300
                                 14 *    O SINCE A STORAGE DUMP IS A VALUABLE AID IN PROGRAM PROBLEM   * 00001400
                                 15 *       SOLVING,IT IS APPARENT THAT THE MORE FAMILIAR YOU ARE WITH * 00001500
                                 16 *       A DUMP THE BETTER.                                         * 00001600
                                 17 *                                                                  * 00001700
                                 18 *                                                                  * 00001800
                                 19 *    O  THE FOLLOWING PROJECT WAS DESIGNED TO FAMILIARIZE YOU WITH * 00001900
                                 20 *         STORAGE DUMP ANALYSIS.                                   * 00002000
                                 21 *                                                                  * 00002100
                                 22 *    O  ANSWER ALL QUESTIONS IN THE SPACE PROVIDED.                * 00002200
                                 23 *                                                                  * 00002300
                                 24 *    O  ANSWERS TO THE QUESTIONS ARE GIVEN.                        * 00002400
                                 25 *                                                                  * 00002500
                                 26 *    O  THE ORDER OF THE PROJECT IS AS FOLLOWS:                    * 00002600
                                 27 *                                          1.EXPLANATION,CORRECT   * 00002700
                                 28 *                                              RESULTS AND ROUTINE. * 00002800
                                 29 *                                          2. LINKAGE EDITOR MAP.  * 00002900
                                 30 *                                          3. QUESTIONS AND ANSWERS . * 00003000
                                 31 *                                          4. STORAGE DUMP.        * 00003100
                                 32 *                                                                  * 00003200
                                 33 *                                                                  * 00003300
                                 34 ********************************************************************** 00003400
```

```
LOC  OBJECT CODE    ADDR1 ADDR2  STMT   SOURCE STATEMENT                                    F08APR70   9/16/70

                                 37 *+++++++++++++++ E X P L A N A T I O N   O F   R O U T I N E +++++++* 00003700
                                 38 *                                                                  * 00003800
                                 39 *   O  THE ROUTINE USED IN THIS PROJECT USES FLOATING POINT        * 00003900
                                 40 *        ARITHMETIC TO SOLVE FOR THE ROOT OF A QUADRATIC EQUATION. * 00004000
                                 41 *                                                                  * 00004100
                                 42 *   O  AS A LITTLE REVIEW OF HIGH SCHOOL ALGEBRA, A QUADRATIC      * 00004200
                                 43 *        EQUATION IS LAYED OUT AS FOLLOWS:                         * 00004300
                                 44 *                                                                  * 00004400
                                 45 *                                        2                         * 00004500
                                 46 *                                   Y=AX +BX-C                     * 00004600
                                 47 *                                                                  * 00004700
                                 48 *                                                                  * 00004800
                                 49 *   O  THE ROOT MAY BE FOUND THROUGH THE USE OF THE FOLLOWING FORMULA:* 00004900
                                 50 *                                                                  * 00005000
                                 51 *                          __________                              * 00005100
                                 52 *                     _ ¬ /   2                                    * 00005200
                                 53 *              X = -B+  V   B -4AC                                 * 00005300
                                 54 *                   ----------------                               * 00005400
                                 55 *                        2A                                        * 00005500
                                 56 *                                                                  * 00005600
                                 57 *                                                                  * 00005700
                                 58 *   O  I THINK YOU RECALL FROM A PREVIOUS SECTION,THAT IF YOU WANT TO * 00005800
                                 59 *        FIND THE SQUARE ROOT OF A NUMBER YOU CAN EITHER WRITE A   * 00005900
                                 60 *        ROUTINE YOURSELF OR LINK TO A SUBROUTINE. SINCE THE WRITING * 00006000
                                 61 *        OF A SQUARE ROOT ROUTINE CAN BE QUITE TEDIOUS,I'LL LINK TO * 00006100
                                 62 *        OUR OLD STANDBY,'XXXSSQRT'(IHCSSQRT IN OUR CASE), TO SOLVE * 00006200
                                 63 *        FOR :   __________                                        * 00006300
                                 64 *             ¬ /     2                                            * 00006400
                                 65 *              V     B -4AC                                         * 00006500.
                                 66 *                                                                  * 00006600
                                 67 *                                                  2               * 00006700
                                 68 *   O  THE QUADRATIC USED IN THIS EXAMPLE IS  Y=2X +11X-21         * 00006800
                                 69 *        THEREFORE, A=2, B=11, C=21                                * 00006900
                                 70 *                                                                  * 00007000
                                 71 ************************************************************************* 00007100
```

```
LOC  OBJECT CODE    ADDR1 ADDR2  STMT   SOURCE STATEMENT                                         F08APR70   9/16/70

                                   74 *%%%%%%%%%%%%%%%%% C O R R E C T   R E S U L T S %%%%%%%%%%%%%%%%%%%%%% 00007400
                                   75 *%                                                                     % 00007500
                                   76 *%                                                                     % 00007600
                                   77 *%                 2                                                   % 00007700
                                   78 *%                B -4AC  SHOULD EQUAL: 4312100000000000               % 00007800
                                   79 *%                                                                     % 00007900
                                   80 *%                2A      SHOULD EQUAL: 4140000000000000               % 00008000
                                   81 *%                                                                     % 00008100
                                   82 *%                _______                                              % 00008200
                                   83 *%             ¬ / 2                                                   % 00008300
                                   84 *%              V B -4AC  SHOULD EQUAL: 4211000000000000               % 00008400
                                   85 *%                                                                     % 00008500
                                   86 *%                                     _                               % 00008600
                                   87 *%     O SINCE THE FORMULA CALLS FOR  -B+ (THE SQUARE ROOT ETC.) THERE % C0008700
                                   88 *%       WILL BE A POSITIVE ANSWER AND A NEGATIVE ANSWER TO THIS       % 00008800
                                   89 *%       PROBLEM . THE RESULTS ARE:                                    % 00008900
                                   90 *%                                                                     % 00009000
                                   91 *%                         POSITIVE:    4118000000000000 AT LOC.'XSUB1'% 00009100
                                   92 *%                                                                     % 00009200
                                   93 *%                         NEGATIVE:    C170000000000000 AT LOC.'XSUB2'% 00009300
                                   94 *%                                                                     % 00009400
                                   95 *%                                                                     % 00009500
                                   96 *%%%%%%%%%%%%%%%%%%%%%%%%%%%%%%%%%%%%%%%%%%%%%%%%%%%%%%%%%%%%%%%%%%%%%%%%% 00009600
```

```
 LOC  OBJECT CODE    ADDR1 ADDR2  STMT   SOURCE STATEMENT                                          F08APR70   9/16/70

                                   98 ************************** R O U T I N E ************************** 00009800
                                   99 *                                                                 * 00009900
000018 7800 C146            0014C  100          LE    0,B            B                                   * 00010000
00001C 3C00                        101          MER   0,0            B ** 2                              * 00010100
00001E 7820 C136            0013C  102          LE    2,FOUR         4                                   * 00010200
000022 7C20 C142            00148  103          ME    2,A            4 * A                               * 00010300
000026 7C20 C14A            00150  104          ME    2,C            4 * A * C                           * 00010400
00002A 3B02                        105          SER   0,2            B**2 - 4*A*C                        * 00010500
00002C 6000 C13A            00140  106          STD   0,DOUBLE                                           * 00010600
000030 4110 C13A            00140  107          LA    1,DOUBLE       PASS THE ADDRESS OF THE F.P. NUMBER TO * 00010700
000034 58F0 C16A            00170  108          L     15,=V(IHCSSQRT) IHCSSQRT.                          * 00010800
000038 05EF                        109          BALR  14,15                GO FIND THE SQUARE ROOT.      * 00010900
00003A 7840 C142            00148  110          LE    4,A            A                                   * 00011000
00003E 7C40 C14E            00154  111          ME    4,TWO          2*A                                 * 00011100
000042 7820 C146            0014C  112          LE    2,B            B                                   * 00011200
000046 3122                        113          LNER  2,2            -B                                  * 00011300
000048 3A20                        114          AER   2,0            -B + SQRT(B**2 - 4*A*C) ...THE SQ.ROOT * 00011400
00004A 3D24                        115          DER   2,4            FIRST ROOT                 COMES BACK IN* 00011500
00004C 7020 C152            00158  116          STE   2,XSUB1                                    F.P. REG.0 * 00011600
000050 7820 C146            0014C  117          LE    2,B            B                                   * 00011700
000054 3122                        118          LNER  2,2            -B                                  * 00011800
000056 3B20                        119          SER   2,0            -B - SQRT(B**2 - 4*A*C)             * 00011900
000058 3D24                        120          DER   2,4            SECOND ROOT                         * 00012000
00005A 7020 C15A            00160  121          STE   2,XSUB2                                            * 00012100
00005E 4110 C0BA            0C0C0  122          LA    1,MESSAGE                                          * 00012200
000062 58F0 C16E            00174  123          L     15,=V(PRINT)   PRINT THE MESSAGE------------+      * 00012300
000066 05EF                        124          BALR  14,15                                       |      * 00012400
000068 0000                        125          DC    H'0'                                        |      * 00012500
00006A 58D0 D004            00004  126          L     13,4(C,13)    GET HIGHER SAVE POINTER       |      * 00012600
00006E 5810 D008            00008  127          L     1,8(0,13)                                   |      * 00012700
000072 980C D014            00014  128          LM    0,12,20(13)                                 |      * 00012800
000076 07FE                        129          BR    14                                          |      * 00012900
000078                             130 SAVIT    DS    18F                                         |      * 00013000
                                   131 *                                                          V      * 00013100
0000C0 F1E3C8C9E240C9E2            132 MESSAGE DC  CL121'1THIS IS THE SOLUTION TO THE QUADRATIC ROOT PROBLEM.' 00013200
                                   133 *                                                                 * 00013300
000139 C00000
00013C 41400000                    134 FOUR     DC    E'4'                                              * 00013400
000140 0000000000000000            135 DOUBLE   DC    D'0'                                              * 00013500
000148 41200000                    136 A        DC    E'2'                                              * 00013600
00014C 41B00000                    137 B        DC    E'11'                                             * 00013700
000150 C2150000                    138 C        DC    E'-21'                                            * 00013800
000154 41200000                    139 TWO      DC    E'2'                                              * 00013900
                                   140 *                                                                 * 00014000
000158 0000000000000000            141 XSUB1    DC    D'0'    RESULTS...... POSITIVE ROOT STORED HERE.  * 00014100
000160 0000000000000000            142 XSUB2    DC    D'0'      "    ...... NEGATIVE ROOT STORED HERE.  * 00014200
                                   143 *                                                                 * 00014300
000168 80000140                    144 ARG      DC    X'80',AL3(DOUBLE)                                 * 00014400
```

```
F44-LEVEL LINKAGE EDITOR OPTIONS SPECIFIED LET,XREF,LIST
          VARIABLE OPTIONS USED -  SIZE=(45056,6144)-          DEFAULT OPTION(S) USED
IEW0000              ENTRY UTILITY
```

CROSS REFERENCE TABLE

CONTROL SECTION

| NAME | ORIGIN | LENGTH |
|---|---|---|
| $PRIVATE | 00 | 178 |
| UTILITY | 178 | 5A0 |
| IHCSSQRT* | 718 | 145 |
| IHCECOMH* | 860 | F39 |
| IHCCOMH2* | 17A0 | 651 |
| IHCERRM * | 1DF8 | 5BC |
| IHCFCVTH* | 23B8 | 119D |
| IHCEFNTH* | 3558 | 512 |
| IHCEFIOS* | 3A70 | 131C |
| IHCUOPT * | 4D90 | 3A0 |
| IHCETRCH* | 5130 | 28E |
| IHCUATBL* | 53C0 | 148 |

ENTRY

| NAME | LOCATION | NAME | LOCATION | NAME | LOCATION | NAME | LOCATION |
|---|---|---|---|---|---|---|---|
| PRINT | 1DA | PCHKRETN | 436 | | | | |
| SQRT | 718 | | | | | | |
| IBCOM# | 860 | FDIOCS# | 91C | INTSWTCH | 177E | | |
| SEQDASD | 1B0C | | | | | | |
| ERRMON | 1DF8 | IHCERRE | 1E10 | | | | |
| ADCON# | 23B8 | FCVAOUTP | 2462 | FCVLOUTP | 24F2 | FCVZOUTP | 2642 |
| FCVIOUTP | 29F0 | FCVEOUTP | 2EF2 | FCVCOUTP | 310C | INT6SWCH | 33F3 |
| ARITH# | 3558 | ADJSWTCH | 38C4 | | | | |
| FIOCS# | 3A70 | FIOCSBEP | 3A76 | | | | |
| IHCTRCH | 5130 | ERRTRA | 5138 | | | | |

| LOCATION | REFERS TO SYMBOL | IN CONTROL SECTION |
|---|---|---|
| 170 | IHCSSQRT | IHCSSQRT |
| 7E8 | IBCOM# | IHCECOMH |
| 91C | SEQDASD | IHCCOMH2 |
| 167C | FIOCS# | IHCEFIOS |
| 16A8 | ADJSWTCH | IHCEFNTH |
| 16A4 | IHCUOPT | IHCUOPT |
| 1690 | FCVLOUTP | IHCFCVTH |
| 1698 | FCVCOUTP | IHCFCVTH |
| 16A0 | FCVZOUTP | IHCFCVTH |
| 165C | IHCCOMH2 | IHCCOMH2 |
| 1634 | IHCCOMH2 | IHCCOMH2 |
| 163C | IHCCOMH2 | IHCCOMH2 |
| 1A31 | IHCECOMH | IHCECOMH |
| 17E4 | IHCERRM | IHCERRM |
| 1C51 | IHCECOMH | IHCECOMH |
| 1C71 | IHCECOMH | IHCECOMH |

| LOCATION | REFERS TO SYMBOL | IN CONTROL SECTION |
|---|---|---|
| 174 | PRINT | UTILITY |
| 810 | IHCERRM | IHCERRM |
| 1684 | ADCON# | IHCFCVTH |
| 1688 | ARITH# | IHCEFNTH |
| 1630 | IHCUOPT | IHCUOPT |
| 168C | FCVEOUTP | IHCFCVTH |
| 1694 | FCVIOUTP | IHCFCVTH |
| 169C | FCVAOUTP | IHCFCVTH |
| 162C | IHCERRE | IHCERRM |
| 1660 | IHCERRM | IHCERRM |
| 1638 | IHCCOMH2 | IHCCOMH2 |
| 1640 | IHCCOMH2 | IHCCOMH2 |
| 1A34 | IHCECOMH | IHCECOMH |
| 17E0 | IBCOM# | IHCECOMH |
| 1C61 | IHCECOMH | IHCECOMH |
| 23A4 | IHCUOPT | IHCUOPT |

| LOCATION | REFERS TO SYMBOL | IN CONTROL SECTION |
|---|---|---|
| 23A8 | IBCOM# | IHCECOMH |
| 23B0 | FIOCSBEP | IHCEFIOS |
| 33B0 | IHCERRM | IHCERRM |
| 3918 | INTSWTCH | IHCECOMH |
| 38BC | IHCUOPT | IHCUOPT |
| 391C | FIOCS# | IHCEFIOS |
| 3BD0 | IHCERRM | IHCERRM |
| 49CC | IBCOM# | IHCECOMH |
| 52A8 | ADCON# | IHCFCVTH |

| LOCATION | REFERS TO SYMBOL | IN CONTROL SECTION |
|---|---|---|
| 23AC | IHCTRCH | IHCETRCH |
| 33B4 | IBCOM# | IHCECOMH |
| 3914 | IBCOM# | IHCECOMH |
| 38C0 | INT6SWCH | IHCFCVTH |
| 3920 | ADCON# | IHCFCVTH |
| 398C | IHCERRM | IHCERRM |
| 49C0 | IHCUATBL | IHCUATBL |
| 52A4 | IBCOM# | IHCECOMH |
| 52AC | FIOCSBEP | IHCEFIOS |

ENTRY ADDRESS 178
TOTAL LENGTH 5508

****GO DOES NOT EXIST BUT HAS BEEN ADDED TO DATA SET

```
LOC  OBJECT CODE    ADDR1 ADDR2  STMT   SOURCE STATEMENT                                    F08APR70   9/16/70

                                 147 *$$$$$$$$$$$$$$$$$$$$$$$$$$$ QUESTION 15.1 $$$$$$$$$$$$$$$$$$$$$$$$$$$$$ 00014700
                                 148 *$                                                                     $ 00014800
                                 149 *$        THE LOCATIONS IN CORE YOU SHOULD LOOK AT IN ORDER TO         $ 00014900
                                 150 *$          DETERMINE IF THE RESULTS OF THE ROUNTINE ARE CORRECT       $ 00015000
                                 151 *$          ARE:                                                       $ 00015100
                                 152 *$                 A.  20 AND 28 + THE STARTING ADDRESS OF THE PROGRAM $ 00015200
                                 153 *$                 B. 158 AND 160 + THE PROGRAMS STARTING ADDRESS      $ 00015300
                                 154 *$                 C. 158 AND 160 IN THE CORE DUMP                     $ 00015400
                                 155 *$                 D. 63FA0 AND 63FA8                                  $ 00015500
                                 156 *$                                                                     $ 00015600
                                 157 *$                                                                     $ 00015700
                                 158 *$$$$$$$$$$$$$$$$$$$$$$$$$$$$$$$$$$$$$$$$$$$$$$$$$$$$$$$$$$$$$$$$$$$$$$$$ 00015800
```

```
 161 *============================ ANSWER 15.1 ============================= 00016100
 162 *=                                                                    = 00016200
 163 *=                                                                    = 00016300
 164 *=                           B  IS THE CORRECT ANSWER                 = 00016400
 165 *=                                                                    = 00016500
 166 *=   LOCATION 158 AND 160 HEX IN THE PROGRAM ARE 'XSUB1 AND XSUB2'    = 00016600
 167 *=                                                                    = 00016700
 168 *====================================================================== 00016800


 170 *+++++++++++++++++++++++++++ W I S D O M ++++++++++++++++++++++++++++++ 00017000
 171 *+                                                                    + 00017100
 172 *+  PROGRAMS ARE FOR THE MOST PART JUDGED ON WHETHER OR NOT THEY      + 00017200
 173 *+  PERFORM CORRECTLY. THAT IS TO SAY, WHETHER OR NOT THE CORRECT     + 00017300
 174 *+  ANSWERS COME OUT. LET'S SEE IF THE RESULTS OF OUR PROGRAM ARE     + 00017400
 175 *+  RIGHT.                                                            + 00017500
 176 *+                                                                    + 00017600
 177 *++++++++++++++++++++++++++++++++++++++++++++++++++++++++++++++++++++++ 00017700


 179 *$$$$$$$$$$$$$$$$$$$$$$$$$$$$ QUESTION 15.2 $$$$$$$$$$$$$$$$$$$$$$$$$$$ 00017900
 180 *$                                                                    $ 00018000
 181 *$                                                                    $ 00018100
 182 *$   WHAT ARE THE CONTENTS OF LOCATIONS 'XSUB1' AND 'XSUB2' IN  THE  $ 00018200
 183 *$     STORAGE DUMP ?                                                 $ 00018300
 184 *$                           THE ANSWER IS _______________________.   $ 00018400
 185 *$                                                                    $ 00018500
 186 *$                                                                    $ 00018600
 187 *$$$$$$$$$$$$$$$$$$$$$$$$$$$$$$$$$$$$$$$$$$$$$$$$$$$$$$$$$$$$$$$$$$$$$$ 00018700
```

```
LOC  OBJECT CODE    ADDR1 ADDR2  STMT   SOURCE STATEMENT                                    F08APR70   9/16/70

                                 189 *============================ ANSWER 15.2 ============================= 00018900
                                 190 *=                                                                  = 00019000
                                 191 *=                                                                  = 00019100
                                 192 *=                            ZEROS                                 = 00019200
                                 193 *=                                                                  = 00019300
                                 194 *=                                                                  = 00019400
                                 195 *=================================================================== 00019500


                                 197 *+++++++++++++++++++++++++++ W I S D O M  ++++++++++++++++++++++++++++ 00019700
                                 198 *+                                                                  + 00019800
                                 199 *+                                                                  + 00019900
                                 200 *+   THIS WOULD LEAD ME TO BELIEVE THAT SOMETHING HAS GONE AWRY      + 00020000
                                 201 *+   WITH OUR PROGRAM. WHY DON'T WE GO ON TO SEE IF WE CAN           + 00020100
                                 202 *+   EVENTUALLY DETERMINE WHAT THE PROBLEM IS.                      + 00020200
                                 203 *+                                                                  + 00020300
                                 204 *+                                                                  + 00020400
                                 205 *+++++++++++++++++++++++++++++++++++++++++++++++++++++++++++++++++++ 00020500


                                 207 *$$$$$$$$$$$$$$$$$$$$$$$$$$$$$ QUESTION 15.3 $$$$$$$$$$$$$$$$$$$$$$$$$$$ 00020700
                                 208 *$                                                                  $ 00020800
                                 209 *$                                                                  $ 00020900
                                 210 *$   WHICH OF THE FOLLOWING CAUSED US TO TAKE A DUMP ?               $ 00021000
                                 211 *$                                                                  $ 00021100
                                 212 *$                            A. A PROGRAM CHECK                    $ 00021200
                                 213 *$                            B. AN EXTERNAL INTERRUPT              $ 00021300
                                 214 *$                            C. A CHANNEL DATA CHECK               $ 00021400
                                 215 *$                            D. NONE OF THE ABOVE                  $ 00021500
                                 216 *$                                                                  $ 00021600
                                 217 *$                                                                  $ 00021700
                                 218 *$$$$$$$$$$$$$$$$$$$$$$$$$$$$$$$$$$$$$$$$$$$$$$$$$$$$$$$$$$$$$$$$$$$$$$$ 00021800
```

```
LOC  OBJECT CODE    ADDR1 ADDR2  STMT   SOURCE STATEMENT                                    F08APR70   9/16/70

                                 221 *============================ ANSWER 15.3 ============================== 00022100
                                 222 *=                                                                    = 00022200
                                 223 *=                                                                    = 00022300
                                 224 *=        THE CORRECT ANSWER IS----------> A                          = 00022400
                                 225 *=                                                                    = 00022500
                                 226 *=                                                                    = 00022600
                                 227 *===================================================================== 00022700


                                 229 *$$$$$$$$$$$$$$$$$$$$$$$$$$$$$$ QUESTION 15.4 $$$$$$$$$$$$$$$$$$$$$$$$$$$$ 00022900
                                 230 *$                                                                    $ 00023000
                                 231 *$   THE TYPE OF INTERRUPTION INDICATED IS ____________?              $ 00023100
                                 232 *$                                                                    $ 00023200
                                 233 *$                          A. ADDRESSING EXCEPTION.                  $ 00023300
                                 234 *$                          B. DATA EXCEPTION.                        $ 00023400
                                 235 *$                          C. EXECUTE EXCEPTION.                     $ 00023500
                                 236 *$                          D. EXPONENT OVERFLOW.                     $ 00023600
                                 237 *$                                                                    $ 00023700
                                 238 *$                                                                    $ 00023800
                                 239 *$$$$$$$$$$$$$$$$$$$$$$$$$$$$$$$$$$$$$$$$$$$$$$$$$$$$$$$$$$$$$$$$$$$$$$$$ 00023900
```

```
 242 *=========================== ANSWER 15.4 ============================= 00024200
 243 *=                                                                    = 00024300
 244 *=                                                                    = 00024400
 245 *=   A....IS THE THE CORRECT ANSWER. THE INTERRUPT CODE IS 05.        = 00024500
 246 *=                                                                    = 00024600
 247 *=                                                                    = 00024700
 248 *====================================================================== 00024800
```

```
 250 *$$$$$$$$$$$$$$$$$$$$$$$$$$$$$$ QUESTION 15.5 $$$$$$$$$$$$$$$$$$$$$$$$$$$$ 00025000
 251 *$                                                                      $ 00025100
 252 *$                                                                      $ 00025200
 253 *$   THE REASON FOR THIS INTERRUPTION IS:                               $ 00025300
 254 *$                                                                      $ 00025400
 255 *$                           A. AN EXECUTE ATTEMPTED TO EXECUTE AN      $ 00025500
 256 *$                              EXECUTE.                                $ 00025600
 257 *$                           B. A PRIVILEGED OPERATION WAS PERFORMED.   $ 00025700
 258 *$                           C. THE ADDRESS OF THE INSTRUCTION          $ 00025800
 259 *$                              SPECIFIED DATA OR AN INSTRUCTION        $ 00025900
 260 *$                              OUTSIDE AVAILABLE STORAGE.              $ 00026000
 261 *$                           D. AN EXPONENT OVERFLOW TOOK PLACE.        $ 00026100
 262 *$                                                                      $ 00026200
 263 *$                                                                      $ 00026300
 264 *$                                                                      $ 00026400
 265 *$$$$$$$$$$$$$$$$$$$$$$$$$$$$$$$$$$$$$$$$$$$$$$$$$$$$$$$$$$$$$$$$$$$$$$$ 00026500
```

```
LOC  OBJECT CODE    ADDR1 ADDR2  STMT   SOURCE STATEMENT                                           F08APR70   9/16/70

                                 268 *============================ ANSWER 15.5 ============================= 00026800
                                 269 *=                                                                    = 00026900
                                 270 *=                                                                    = 00027000
                                 271 *=  ANSWER C IS CORRECT. SO SAYETH THE PRINCIPLES OF OPERATION MANUAL.= 00027100
                                 272 *=                                                                    = 00027200
                                 273 *=                                                                    = 00027300
                                 274 *=                                                                    = 00027400
                                 275 *====================================================================== 00027500

                                 277 *$$$$$$$$$$$$$$$$$$$$$$$$$$$$ QUESTION 15.6 $$$$$$$$$$$$$$$$$$$$$$$$$$$ 00027700
                                 278 *$                                                                    $ 00027800
                                 279 *$                                                                    $ 00027900
                                 280 *$    THE FAILING INSTRUCTIONS ADDRESS IN CORE MAY BE FOUND BY        $ 00028000
                                 281 *$    EXAMINING THE WORD AT STORAGE LOCATION _________.               $ 00028100
                                 282 *$                                                                    $ 00028200
                                 283 *$                           A. X'34'                                 $ 00028300
                                 284 *$                           B. X'2C'                                 $ 00028400
                                 285 *$                           C. X'70'                                 $ 00028500
                                 286 *$                           D. X'00'                                 $ 00028600
                                 287 *$                                                                    $ 00028700
                                 288 *$$$$$$$$$$$$$$$$$$$$$$$$$$$$$$$$$$$$$$$$$$$$$$$$$$$$$$$$$$$$$$$$$$$$$$ 00028800
```

```
LOC  OBJECT CODE    ADDR1 ADDR2  STMT   SOURCE STATEMENT                                    F08APR70   9/16/70


                                 291 *============================ ANSWER 15.6 ============================== 00029100
                                 292 *=                                                                     = 00029200
                                 293 *=                                                                     = 00029300
                                 294 *=    B IS RIGHT......... THATS THE ADDRESS OF THE SECOND WORD OF THE  = 00029400
                                 295 *=    PROGRAM OLD P.S.W. .                                             = 00029500
                                 296 *=                                                                     = 00029600
                                 297 *=                                                                     = 00029700
                                 298 *=                                                                     = 00029800
                                 299 *=================================================================== 00029900


                                 301 *$$$$$$$$$$$$$$$$$$$$$$$$$$$$$ QUESTION 15.7 $$$$$$$$$$$$$$$$$$$$$$$$$$$$$ 00030100
                                 302 *$                                                                     $ 00030200
                                 303 *$                                                                     $ 00030300
                                 304 *$    THE FAILING INSTRUCTION IS LOCATED AT THE STARTING ADDRESS       $ 00030400
                                 305 *$    OF THE PROGRAM PLUS_____.                                        $ 00030500
                                 306 *$                                                                     $ 00030600
                                 307 *$                              A. 72E BYTES                           $ 00030700
                                 308 *$                              B. 72A BYTES                           $ 00030800
                                 309 *$                              C. 63EAC BYTES                         $ 00030900
                                 310 *$                              D. 11D6 BYTES                          $ 00031000
                                 311 *$                                                                     $ 00031100
                                 312 *$$$$$$$$$$$$$$$$$$$$$$$$$$$$$$$$$$$$$$$$$$$$$$$$$$$$$$$$$$$$$$$$$$$$$$$$ 00031200
```

```
*=========================== ANSWER 15.7 ==========================
*=                                                                 =
*=                                                                 =
*=   B IS THE TRUE ANSWER. DON'T FORGET THE INSTRUCTION COUNTER IS  =
*=   STEPPED BEFORE THE PROGRAM OLD P.S.W. IS STORED. THE INSTRUCTION =
*=   LENGTH CODE (BITS 32 AND 33 OF THE P.S.W) WILL TELL US HOW LONG =
*=   THE FAILING INSTRUCTION WAS. IN THIS CASE THE I.L.C. CONTAINS  =
*=   10 WHICH INDICATES AN INSTRUCTION LENGTH OF 2 HALFWORDS (4 BYTES)=
*=     ( THE FIRST HEX DIGIT IN THE SECOND WORD OF THE PROGRAM OLD  =
*=       P.S.W. CONTAINS 'A'===1010 IN BINARY. BITS 32 AND 33 ARE THE =
*=       FIRST 2 BITS ===10.)                                      =
*=                                                                 =
*=   THEREFORE IF WE SUBTRACT 4 FROM THE INSTRUCTION ADDRESS IN THE =
*=    P.S.W. WE'LL FIND THAT WE ARE IN FACT POINTING AT AN INSTRUCTION=
*=   X'72A' BYTES INTO THE PROGRAM.                                =
*=                                                                 =
*=                                                                 =
*=================================================================
```

```
*$$$$$$$$$$$$$$$$$$$$$$$$$$$$$ QUESTION 15.8 $$$$$$$$$$$$$$$$$$$$$$$$$$$$$
*$                                                                 $
*$                                                                 $
*$   ---------> USE THE LINKAGE EDITOR CROSS REFERENCE TABLE<-------- $
*$                                                                 $
*$   THE INSTRUCTION THAT FAILED IS LOCATED IN THE CSECT WHOSE     $
*$   NAME IS:                                                      $
*$                            A. $PRIVATE                          $
*$                            B. PRINT                             $
*$                            C. IHCSSQRT                          $
*$                            D. IHCUOPT                           $
*$                                                                 $
*$                            THE ANSWER IS...........             $
*$                                                                 $
*$$$$$$$$$$$$$$$$$$$$$$$$$$$$$$$$$$$$$$$$$$$$$$$$$$$$$$$$$$$$$$$$$$$$$$$$$$$$
```

```
351 *============================ ANSWER 15.8 ============================ 00035100
352 *=                                                                   = 00035200
353 *=   THE ANSWER IS       C.   IHCSSQRT                               = 00035300
354 *=                                                                   = 00035400
355 *=                                                                   = 00035500
356 *=                                                                   = 00035600
357 *=   THE LINKAGE EDITOR CROSS REFERENCE TABLE TELLS US THAT IHCSSQRT  = 00035700
358 *=   HAS AN ORIGIN AT 718 BYTES INTO THE PROGRAM AND A LENGTH OF 149  = 00035800
359 *=   BYTES.    I SENSE YOU MUTTERING,"HOW CAN I GO ANY FURTHER ?      = 0C035900
360 *=   THE PROBLEM IS SOMEONE ELSES ROUTINE AND I DON'T HAVE A LISTING."= 00036000
361 *=   PLEASE DON'T GIVE UP, LET'S STICK WITH IT A WHILE LONGER, OKAY?  = 00036100
362 *=                                                                   = 00036200
363 *===================================================================== 0003630C
```

```
365 *$$$$$$$$$$$$$$$$$$$$$$$$$$$$$$ QUESTION  15.9 $$$$$$$$$$$$$$$$$$$$$$$$$$$ 00036500
366 *$                                                                   $ 00036600
367 *$                                                                   $ 00036700
368 *$             THE CODE THAT FAILED IS :                             $ 00036800
369 *$                                                                   $ 00036900
370 *$                              A. 12114740F03C                      $ 00037000
371 *$                              B. C58E1000                          $ 00037100
372 *$                              C. 4740F078                          $ 00037200
373 *$                              D. 784E0000                          $ 00037300
374 *$                              E. 0000784E                          $ 00037400
375 *$                                                                   $ 00037500
376 *$                              THE ANSWER IS __________.            $ 00037600
377 *$                                                                   $ 00037700
378 *$$$$$$$$$$$$$$$$$$$$$$$$$$$$$$$$$$$$$$$$$$$$$$$$$$$$$$$$$$$$$$$$$$$$$$$ 00037800
```

```
LOC  OBJECT CODE    ADDR1 ADDR2  STMT   SOURCE STATEMENT                                    F08APR70   9/16/70

                                 381 *============================ ANSWER 15.9 ============================= 00038100
                                 382 *=                                                                    = 00038200
                                 383 *=                                                                    = 00038300
                                 384 *=                          ANSWER D IS CORRECT.                      = 00038400
                                 385 *=                                                                    = 00038500
                                 386 *=                                                                    = 00038600
                                 387 *=                          LET US PROCEED .                          = 00038700
                                 388 *=========================================================================== 00038800


                                 390 *$$$$$$$$$$$$$$$$$$$$$$$$$$$$$ QUESTION 15.10 $$$$$$$$$$$$$$$$$$$$$$$$$$ 00039000
                                 391 *$                                                                    $ 00039100
                                 392 *$   WHEN TRANSLATED INTO A SYMBOLIC INSTRUCTION THE FAILING CODE     $ 00039200
                                 393 *$   WOULD BE ____________________?                                  $ 00039300
                                 394 *$                                                                    $ 00039400
                                 395 *$                                                                    $ 00039500
                                 396 *$$$$$$$$$$$$$$$$$$$$$$$$$$$$$$$$$$$$$$$$$$$$$$$$$$$$$$$$$$$$$$$$$$$$$$$$ 00039600
```

```
399 *=========================== ANSWER 15.10 ========================== 00039900
400 *=                                                                 = 00040000
401 *=                           HOW ABOUT A  LE   4,0(14)             = 00040100
402 *=                                                                 = 00040200
403 *=        --------------->   ITS A 'LOAD SHORT' FLOATING POINT INST. = 00040300
404 *=                                                                 = 00040400
405 *=                                                                 = 00040500
406 *================================================================== 00040600
```

```
408 *$$$$$$$$$$$$$$$$$$$$$$$$$$$$$ QUESTION 15.11 $$$$$$$$$$$$$$$$$$$$$$$$$$ 00040800
409 *$                                                                  $ 00040900
410 *$                                                                  $ 00041000
411 *$   TRUE/FALSE                                                     $ 00041100
412 *$                                                                  $ 00041200
413 *$   REGISTER 14   CONTAINS A NUMBER THAT IF USED AS AN ADDRESS IS   $ 00041300
414 *$   WELL WITHIN THE RANGE OF AVAILABLE STORAGE.                    $ 00041400
415 *$                                                                  $ 00041500
416 *$                                                                  $ 00041600
417 *$$$$$$$$$$$$$$$$$$$$$$$$$$$$$$$$$$$$$$$$$$$$$$$$$$$$$$$$$$$$$$$$$$$$$ 00041700
```

```
LOC  OBJECT CODE    ADDR1 ADDR2  STMT   SOURCE STATEMENT                                    F08APR70   9/16/70

                                 420 *============================ ANSWER 15.11 ============================ 00042000
                                 421 *=                                                                    = 00042100
                                 422 *=   F A L S E   REGISTER 14 CONTAINS 43121000 (THE 121000 IS USED AS = 00042200
                                 423 *=   THE ADDRESS PORTION OF THE REGISTER ) AND THATS A BIG NUMBER.    = 00042300
                                 424 *=   THE MERE FACT THAT WE GOT AN ADDRESSING EXCEPTION WHEN ATTEMPTING= 00042400
                                 425 *=   TO USE REGISTER 14 AS AN INDEX REGISTER TELLS US THAT OUR ADDRESS= 00042500
                                 426 *=   IS OUTSIDE AVAILABLE STORAGE. ITS NOT REALLY NECESSARY TO KNOW   = 00042600
                                 427 *=   THE AMOUNT OF STORAGE AVAILABLE IN THIS CASE.                    = 00042700
                                 428 *=                                                                    = 00042800
                                 429 *=                                                                    = 00042900
                                 430 *=   LET'S KEEP GOING. EVER ONWARD.                                   = 00043000
                                 431 *=                                                                    = 00043100
                                 432 *=                                                                    = 00043200
                                 433 *=====================================================================  00043300


                                 435 *$$$$$$$$$$$$$$$$$$$$$$$$$$$$$ QUESTION 15.12 $$$$$$$$$$$$$$$$$$$$$$$$$$$ 00043500
                                 436 *$                                                                    $ 00043600
                                 437 *$                                                                    $ 00043700
                                 438 *$   THE FAILING INSTRUCTION IS LOCATED AT THE STARTING ADDRESS OF    $ 00043800
                                 439 *$   IHCSSQRT PLUS ________                                          $ 00043900
                                 440 *$                           A. X'158' BYTES                          $ 00044000
                                 441 *$                           B. X'72'  BYTES                          $ 00044100
                                 442 *$                           C. X'12'  BYTES                          $ 00044200
                                 443 *$                           D. 12     BYTES                          $ 00044300
                                 444 *$                                                                    $ 00044400
                                 445 *$                           THE ANSWER IS..........                  $ 00044500
                                 446 *$                                                                    $ 00044600
                                 447 *$$$$$$$$$$$$$$$$$$$$$$$$$$$$$$$$$$$$$$$$$$$$$$$$$$$$$$$$$$$$$$$$$$$$$$$ 00044700
```

```
LOC  OBJECT CODE    ADDR1 ADDR2  STMT   SOURCE STATEMENT                                    F08APR70   9/16/70

                                 450 *========================== ANSWER 15.12 ========================== 00045000
                                 451 *=                                                                 = 00045100
                                 452 *=                                                                 = 00045200
                                 453 *=   ANSWER   C  IS RIGHT. 72A-718=X'12'                           = 00045300
                                 454 *=                                                                 = 00045400
                                 455 *=                                                                 = 00045500
                                 456 *====================================================================== 00045600

                                 458 *+++++++++++++++ W O R D S   F R O M   T H E   S A G E +++++++++++++ 00045800
                                 459 *+                                                                 + 00045900
                                 460 *+    LET'S SEE IF WE CAN FIND OUT WHERE REGISTER 14 GETS LOADED.  + 00046000
                                 461 *+                                                                 + 00046100
                                 462 *+            HEY... 12 BYTES ISN'T VERY FAR, WE CAN PSYCH OUT THAT + 00046200
                                 463 *+             FEW INSTRUCTIONS WITH NO TROUBLE AT ALL. WELL, CAN'T + 00046300
                                 464 *+             WE?                                                 + 00046400
                                 465 *+                                                                 + 00046500
                                 466 *++++++++++++++++++++++++++++++++++++++++++++++++++++++++++++++++++ 00046600

                                 468 *$$$$$$$$$$$$$$$$$$$$$$$$$$$$$ QUESTION 15.13 $$$$$$$$$$$$$$$$$$$$$$$$$ 00046800
                                 469 *$                                                                 $ 00046900
                                 470 *$                                                                 $ 00047000
                                 471 *$    THE FIRST INSTRUCTION IN IHCSSQRT IS LOCATED________BYTES INTO $ 00047100
                                 472 *$     THE PROGRAM AND IS A _______________.                       $ 00047200
                                 473 *$                                                                 $ 00047300
                                 474 *$                                                                 $ 00047400
                                 475 *$$$$$$$$$$$$$$$$$$$$$$$$$$$$$$$$$$$$$$$$$$$$$$$$$$$$$$$$$$$$$$$$$$$$ 00047500
```

```
LOC  OBJECT CODE    ADDR1 ADDR2  STMT   SOURCE STATEMENT                                    F08APR70   9/16/70

                                 478 *============================ ANSWER 15.13 ============================ 00047800
                                 479 *=                                                                  = 00047900
                                 480 *=                                                                  = 00048000
                                 481 *=                          718, BC  15,10(15)                      = 00048100
                                 482 *=                                                                  = 00048200
                                 483 *=                                                                  = 00048300
                                 484 *================================================================== 00048400


                                 486 *$$$$$$$$$$$$$$$$$$$$$$$$$$$$$ QUESTION 15.14 $$$$$$$$$$$$$$$$$$$$$$$$$$ 00048600
                                 487 *$                                                                  $ 00048700
                                 488 *$                                                                  $ 00048800
                                 489 *$   THE INSTRUCTION THE INSTRUCTION IN THE PREVIOUS QUESTION WILL   $ 00048900
                                 490 *$     BRANCH TO IS A ____                                          $ 00049000
                                 491 *$                          A. STORE MULTIPLE                       $ 00049100
                                 492 *$                          B. LOAD REGISTER                        $ 00049200
                                 493 *$                          C. ADD REGISTER                         $ 00049300
                                 494 *$                          D. SHIFT LEFT LOGICAL                   $ 00049400
                                 495 *$                                                THE ANSWER IS_____$ 00049500
                                 496 *$$$$$$$$$$$$$$$$$$$$$$$$$$$$$$$$$$$$$$$$$$$$$$$$$$$$$$$$$$$$$$$$$$$$$$$$ 00049600
```

```
499 *============================ ANSWER 15.14 ============================ 00049900
500 *=                                                                    = 00050000
501 *=   THE CORRECT ANSWER IS   A   .                                    = 00050100
502 *=                                                                    = 00050200
503 *=   HEY, THAT MAKES SENSE. IHCSSQRT SHOULD ALSO FOLLOW LINKAGE       = 00050300
504 *=   CONVENTIONS, LIKE EVERYONE ELSE.                                 = 00050400
505 *=   THIS MIGHT MEAN WE CAN PROVE WHAT THE CONTENTS OF REGISTER       = 00050500
506 *=   14 WAS WHEN IHCSSQRT WAS ENTERED.                                = 00050600
507 *=                                                                    = 00050700
508 *====================================================================== 00050800
```

```
510 *$$$$$$$$$$$$$$$$$$$$$$$$$$$$ QUESTION 15.15 $$$$$$$$$$$$$$$$$$$$$$$$$$ 00051000
511 *$                                                                    $ 00051100
512 *$                                                                    $ 00051200
513 *$   IS REGISTER 14 ONE OF THE REGISTERS STORED BY THE STM INSTRUCTION$ 00051300
514 *$   __________ ?                                                     $ 00051400
515 *$                                                                    $ 00051500
516 *$                                                                    $ 00051600
517 *$   IF SO, ARE THE CONTENTS OF STORAGE THE SAME AS THE CURRENT       $ 00051700
518 *$   CONTENTS OF REGISTER 14_____________?                            $ 00051800
519 *$                                                                    $ 00051900
520 *$$$$$$$$$$$$$$$$$$$$$$$$$$$$$$$$$$$$$$$$$$$$$$$$$$$$$$$$$$$$$$$$$$$$$$ 00052000
```

```
523 *============================ ANSWER 15.15 ============================ 00052300
524 *=                                                                    = 00052400
525 *=                                                                    = 00052500
526 *=   REGISTER 14 IS ONE OF THE REGISTERS STORED BY THE STM.          = 00052600
527 *=                                                                    = 00052700
528 *=   THE CONTENTS OF THE STORAGE LOCATION WHERE THE ORIGINAL REGISTER = 00052800
529 *=   14 WAS STORED IS NOT THE SAME AS THE CURRENT CONTENTS OF        = 00052900
530 *=   REGISTER 14.                                                     = 00053000
531 *=     REGISTER 14 WAS STORED AT THE LOCATION POINTED TO BY REGISTER = 00053100
532 *=     13 PLUS 12 BYTES.                                              = 00053200
533 *=                                                                    = 00053300
534 *====================================================================== 00053400
```

```
536 *$$$$$$$$$$$$$$$$$$$$$$$$$$$$ QUESTION 15.16 $$$$$$$$$$$$$$$$$$$$$$$$$$ 00053600
537 *$                                                                    $ 00053700
538 *$                                                                    $ 00053800
539 *$   T R U E / F A L S E                                              $ 00053900
540 *$                                                                    $ 00054000
541 *$   REGISTER 14 WAS MODIFIED TO ITS CURRENT VALUE IN IHCSSQRT .     $ 00054100
542 *$                                                                    $ 00054200
543 *$                                                                    $ 00054300
544 *$$$$$$$$$$$$$$$$$$$$$$$$$$$$$$$$$$$$$$$$$$$$$$$$$$$$$$$$$$$$$$$$$$$$$$ 00054400
```

```
LOC  OBJECT CODE    ADDR1 ADDR2  STMT   SOURCE STATEMENT                                          F08APR70   9/16/70

                                 546 *=========================== ANSWER 15.16 ============================ 00054600
                                 547 *=                                                                 = 00054700
                                 548 *=                          T R U E                                = 00054800
                                 549 *=                                                                 = 00054900
                                 550 *====================================================================== 00055000

                                 552 *+++++++++++++++++++++++++++++ W I S E   W O R D S +++++++++++++++++++ 00055200
                                 553 *+                                                                 + 00055300
                                 554 *+   HEY GUYS, THAT CINCHES IT,CALL IN THE  F O R T R A N  BOYS      + 00055400
                                 555 *+   TO FIX THEIR SUBROUTINE SO WE CAN SUCCESSFULLY FIND THE ROOT    + 00055500
                                 556 *+   OF OUR QUADRATIC EQUATION, OR HAVE YOU FORGOTTEN ?              + 00055600
                                 557 *+                                                                 + 00055700
                                 558 *+   BUT JUST WAIT A MINUTE, JUST SO WE DON'T WIND UP WITH EGG ON    + 00055800
                                 559 *+   OUR FACE LET'S GO A LITTLE FURTHER.                            + 00055900
                                 560 *+                                                                 + 00056000
                                 561 *++++++++++++++++++++++++++++++++++++++++++++++++++++++++++++++++++++ 00056100

                                 563 *$$$$$$$$$$$$$$$$$$$$$$$$$$$$$$ QUESTION 15.17 $$$$$$$$$$$$$$$$$$$$$$$$$$ 00056300
                                 564 *$                                                                 $ 00056400
                                 565 *$                                                                 $ 00056500
                                 566 *$   WHAT INSTRUCTION WILL EXECUTE AFTER THE STM IN IHCSSQRT ?      $ 00056600
                                 567 *$                                                                 $ 00056700
                                 568 *$                          THE ANSWER IS...........               $ 00056800
                                 569 *$                                                                 $ 00056900
                                 570 *$$$$$$$$$$$$$$$$$$$$$$$$$$$$$$$$$$$$$$$$$$$$$$$$$$$$$$$$$$$$$$$$$$$$$$$$ 00057000
```

```
573 *============================ ANSWER 15.17 ============================ 00057300
574 *=                                                                    = 00057400
575 *=                                                                    = 00057500
576 *=                                                                    = 00057600
577 *=                           H M M M M M M M M                        = 00057700
578 *=                                                                    = 00057800
579 *=                       ITS A..... L  14,0(1)                        = 00057900
580 *=                                                                    = 00058000
581 *=   NOW WE'RE GETTING SOMEWHERE.                                     = 00058100
582 *=                                                                    = 00058200
583 *====================================================================== 00058300


585 *$$$$$$$$$$$$$$$$$$$$$$$$$$$$ QUESTION 15.18 $$$$$$$$$$$$$$$$$$$$$$$$$$ 00058500
586 *$                                                                    $ 00058600
587 *$                                                                    $ 00058700
588 *$   WHAT IS THE NEXT INSTRUCTION EXECUTED AFTER THE L  14,0(1) ?     $ 00058800
589 *$                                                                    $ 00058900
590 *$                           THE ANSWER IS___________.                $ 00059000
591 *$                                                                    $ 00059100
592 *$$$$$$$$$$$$$$$$$$$$$$$$$$$$$$$$$$$$$$$$$$$$$$$$$$$$$$$$$$$$$$$$$$$$$$ 00059200
```

```
LOC  OBJECT CODE    ADDR1 ADDR2  STMT   SOURCE STATEMENT                                          F08APR70   9/16/70

                                 594 *========================== ANSWER 15.18 ========================== 00059400
                                 595 *=                                                                = 00059500
                                 596 *=   THE LE   4,0(14) WHICH FAILED.                               = 00059600
                                 597 *=                                                                = 00059700
                                 598 *===================================================================== 00059800


                                 600 *%%%%%%%%%%%%%%%%%%%%%%% R E C A P %%%%%%% R E C A P %%%%%%%%%%%%%%%%% 00060000
                                 601 *%                                                                 % 00060100
                                 602 *%                                                                 % 00060200
                                 603 *%    THE INSTRUCTION STREAM EXECUTED IN IHCSSQRT IS AS FOLLOWS:   % 00060300
                                 604 *%                                                                 % 00060400
                                 605 *%                          BC   15,10(15)      1   *     *     *   % 00060500
                                 606 *%                          STM   14,15,12(13)  2    *    *    *    % 00060600
                                 607 *%                          L     14,0(1)       3     *   *   *     % 00060700
                                 608 *%                          LE    4,0(14)       4  *****"TILT"****** % 00060800
                                 609 *%                                                 *   *   *     % 00060900
                                 610 *%                                                *    *    *    % 00061000
                                 611 *%                                               *     *     *   % 00061100
                                 612 *%                                                                 % 00061200
                                 613 *%        LET US CONTINUE.......                                   % 00061300
                                 614 *%                                                                 % 00061400
                                 615 *%%%%%%%%%%%%%%%%%%%%%%%%%%%%%%%%%%%%%%%%%%%%%%%%%%%%%%%%%%%%%%%%%%%% 00061500
```

```
618 *$$$$$$$$$$$$$$$$$$$$$$$$$$$$$$ QUESTION 15.19 $$$$$$$$$$$$$$$$$$$$$$$$$$$ 00061800
619 *$                                                                       $ 00061900
620 *$   THE LOCATION WHOSE CONTENTS IS LOADED INTO REGISTER 14 BY           $ 00062000
621 *$   INSTRUCTION 3 IN THE RECAP (L  14,0(1) )IS LOCATED AT:              $ 00062100
622 *$                                                                       $ 00062200
623 *$                            A. X'800' BYTES INTO THE PROGRAM           $ 00062300
624 *$                            B. X'140' BYTES INTO THE PROGRAM           $ 00062400
625 *$                            C. X'750' BYTES INTO THE PROGRAM           $ 00062500
626 *$                            D. AT LOCATION 0000                        $ 00062600
627 *$                                                                       $ 00062700
628 *$                            THE ANSWER IS_______.                      $ 00062800
629 *$                                                                       $ 00062900
630 *$$$$$$$$$$$$$$$$$$$$$$$$$$$$$$$$$$$$$$$$$$$$$$$$$$$$$$$$$$$$$$$$$$$$$$$$$ 00063000
```

```
633 *============================ ANSWER 15.19 ============================ 00063300
634 *=                                                                    = 00063400
635 *=              ---------------->   B   <--------------               = 00063500
636 *=                                                                    = 00063600
637 *====================================================================== 00063700



639 *$$$$$$$$$$$$$$$$$$$$$$$$$$$$ QUESTION 15.20 $$$$$$$$$$$$$$$$$$$$$$$$$$ 00063900
640 *$                                                                    $ 00064000
641 *$                                                                    $ 00064100
642 *$   IN WHAT CSECT IS THE ADDRESS REFERRED TO IN QUESTION 15.19       $ 00064200
643 *$   LOCATED ?                                                        $ 00064300
644 *$                           THE CSECT NAME IS___________.            $ 00064400
645 *$                                                                    $ 00064500
646 *$$$$$$$$$$$$$$$$$$$$$$$$$$$$$$$$$$$$$$$$$$$$$$$$$$$$$$$$$$$$$$$$$$$$$$ 00064600
```

```
                                 649 *=========================== ANSWER 15.20 ============================= 00064900
                                 650 *=                                                                    = 00065000
                                 651 *=                          $PRIVATE                                  = 00065100
                                 652 *=                                                                    = 00065200
                                 653 *=                          H E Y   T H A T ' S   U S                 = 00065300
                                 654 *=                                                                    = 00065400
                                 655 *=   YOU SHOULD HAVE USED THE LINKAGE EDITOR CROSS REFERENCE TABLE.   = 00065500
                                 656 *=                                                                    = 00065600
                                 657 *====================================================================== 00065700




                                 659 *$$$$$$$$$$$$$$$$$$$$$$$$$$$$ QUESTION 15.21 $$$$$$$$$$$$$$$$$$$$$$$$$$ 00065900
                                 660 *$                                                                    $ 00066000
                                 661 *$   WHAT ARE THE CONTENTS OF THE CORE STORAGE LOCATION POINTED       $ 00066100
                                 662 *$   TO BY REGISTER 1 ?                                               $ 00066200
                                 663 *$                                                                    $ 00066300
                                 664 *$                          THE STORAGE LOCATION CONTAINS_________.   $ 00066400
                                 665 *$                                                                    $ 00066500
                                 666 *$$$$$$$$$$$$$$$$$$$$$$$$$$$$$$$$$$$$$$$$$$$$$$$$$$$$$$$$$$$$$$$$$$$$$$ 00066600
```

```
669 *============================ ANSWER 15.21 ============================ 00066900
670 *=                                                                    = 00067000
671 *=                           43121000                                 = 00067100
672 *=                                                                    = 00067200
673 *=   THAT NUMBER LOOKS VAGUELY FAMILIAR,BUTS LETS HOLD OFF FOR A      = 00067300
674 *=                           LITTLE WHILE .                           = 00067400
675 *=                                                                    = 00067500
676 *====================================================================== 00067600
```

```
678 *$$$$$$$$$$$$$$$$$$$$$$$$$$$$$ QUESTION 15.22 $$$$$$$$$$$$$$$$$$$$$$$$$ 00067800
679 *$                                                                    $ 00067900
680 *$                                                                    $ 00068000
681 *$   WHAT IS THE SYMBOL NAME OF THE LOCATION REFERENCED               $ 00068100
682 *$   BY THE ADDRESS IN REGISTER 1.                                    $ 00068200
683 *$                                                                    $ 00068300
684 *$                           A. 'XSUB1'                               $ 00068400
685 *$                           B. 'XSUB2'                               $ 00068500
686 *$                           C. 'DOUBLE'                              $ 00068600
687 *$                           D. 'FIOCS#'                              $ 00068700
688 *$                                                                    $ 00068800
689 *$                           THE ANSWER IS_____________.              $ 00068900
690 *$                                                                    $ 00069000
691 *$$$$$$$$$$$$$$$$$$$$$$$$$$$$$$$$$$$$$$$$$$$$$$$$$$$$$$$$$$$$$$$$$$$$$$ 00069100
```

```
LOC  OBJECT CODE    ADDR1 ADDR2  STMT   SOURCE STATEMENT                                    F08APR70   9/16/70

                                 694 *============================ ANSWER 15.22 ============================= 00069400
                                 695 *=                                                                    = 00069500
                                 696 *=                                                                    = 00069600
                                 697 *=   THE ANSWER IS    C       (DOUBLE)                                = 00069700
                                 698 *=                                                                    = 00069800
                                 699 *=   THIS TIME YOU COULD HAVE USED THE ASSEMBLER CROSS REFERENCE LIST.= 00069900
                                 700 *=                                                                    = 00070000
                                 701 *==================================================================== 00070100


                                 703 *$$$$$$$$$$$$$$$$$$$$$$$$$$$$$ QUESTION 15.23 $$$$$$$$$$$$$$$$$$$$$$$$$$ 00070300
                                 704 *$                                                                    $ 00070400
                                 705 *$   THE INSTRUCTION THAT LOADS REGISTER ONE WITH THE ADDRESS OF       $ 00070500
                                 706 *$   'DOUBLE' IS LOCATED AT ASSEMBLED ADDRESS________IN OUR ASSEMBLY   $ 00070600
                                 707 *$   LISTING ?                                                         $ 00070700
                                 708 *$                                                                    $ 00070800
                                 709 *$$$$$$$$$$$$$$$$$$$$$$$$$$$$$$$$$$$$$$$$$$$$$$$$$$$$$$$$$$$$$$$$$$$$$$$ 00070900
```

```
LOC  OBJECT CODE    ADDR1 ADDR2  STMT   SOURCE STATEMENT                                                F08APR70   9/16/70

                                 712 *============================ ANSWER 15.23 ============================ 00071200
                                 713 *=                                                                    = 00071300
                                 714 *=                                                                    = 00071400
                                 715 *=                          X'30'                                     = 00071500
                                 716 *=                                                                    = 00071600
                                 717 *==================================================================== 00071700


                                 719 *%%%%%%%%%%%%%%%%%%%%%%%%%%%% R E C A P %%%%%%%%%%%%%%%%%%%%%%%%%%%%% 00071900
                                 720 *%                                                                    % 00072000
                                 721 *%   LET'S RECONSTRUCT THE CRIME.                                     % 00072100
                                 722 *%                                                                    % 00072200
                                 723 *%   THE FIRST THING WE DID WAS LOAD THE ADDRESS OF 'DOUBLE' INTO     % 00072300
                                 724 *%   REGISTER 1. THEN WE BRANCHED TO IHCSSQRT. JUST A LITTLE WAY      % 00072400
                                 725 *%   INTO IHCSSQRT WE BLEWUP(B0000M)WHEN WE ATTEMPTED TO LOAD         % 00072500
                                 726 *%   FLOATING POINT REGISTER 4 FROM SOME WAY OUT LOCATION.            % 00072600
                                 727 *%                                                                    % 00072700
                                 728 *%                          LET'S GO ON TO SEE IF THE BUTLER DID IT. % 00072800
                                 729 *%                                                                    % 00072900
                                 730 *%%%%%%%%%%%%%%%%%%%%%%%%%%%%%%%%%%%%%%%%%%%%%%%%%%%%%%%%%%%%%%%%%%%%% 00073000
```

```
733 *$$$$$$$$$$$$$$$$$$$$$$$$$$$$$ QUESTION 15.24 $$$$$$$$$$$$$$$$$$$$$$$$$$$ 00073300
734 *$                                                                      $ 00073400
735 *$   THE SQUARE ROOT SUBROUTINE 'REQUIRES'  THE ADDRESS OF              $ 00073500
736 *$   WHICH OF THE FOLLOWING TO BE PASSED TO IT IN REGISTER 1 ?           $ 00073600
737 *$                                                                      $ 00073700
738 *$                            A. A FLOATING POINT NUMBER                $ 00073800
739 *$                            B. A FIXED POINT NUMBER                   $ 00073900
740 *$                            C. A PARAMETER LIST                       $ 00074000
741 *$                            D. A SAVE AREA                            $ 00074100
742 *$                                                                      $ 00074200
743 *$                                                                      $ 00074300
744 *$$$$$$$$$$$$$$$$$$$$$$$$$$$$$$$$$$$$$$$$$$$$$$$$$$$$$$$$$$$$$$$$$$$$$$$$$$$$ 00074400
```

```
746 *============================ ANSWER 15.24 ============================ 00074600
747 *=                                                                    = 00074700
748 *=                  C------> A PARAMETER LIST                         = 00074800
749 *=                                                                    = 00074900
750 *==================================================================== 00075000
```

```
752 *$$$$$$$$$$$$$$$$$$$$$$$$$$$$$ QUESTION 15.25 $$$$$$$$$$$$$$$$$$$$$$$$$$$ 00075200
753 *$                                                                      $ 00075300
754 *$                                                                      $ 00075400
755 *$   THE ADDRESS OF WHICH OF THE FOLLOWING   'IS'   BEING PASSED TO     $ 00075500
756 *$   IHCSSQRT IN REGISTER 1 :                                           $ 00075600
757 *$                            A. A FLOATING POINT NUMBER                $ 00075700
758 *$                            B. A FIXED POINT NUMBER                   $ 00075800
759 *$                            C. A PARAMETER LIST                       $ 00075900
760 *$                            D. A SAVE AREA                            $ 00076000
761 *$                                                                      $ 00076100
762 *$                                                                      $ 00076200
763 *$$$$$$$$$$$$$$$$$$$$$$$$$$$$$$$$$$$$$$$$$$$$$$$$$$$$$$$$$$$$$$$$$$$$$$$$$$$$ 00076300
```

```
*============================ ANSWER 15.25 ============================ 00076600
*=                                                                      = 00076700
*=   WOULD YOU BELIEVE A FLOATING POINT NUMBER------> ANSWER 'A'       = 00076800
*=                                                                      = 00076900
*=    SEEMS TO ME WE HAVE FOUND THE CULPRIT.                            = 00077000
*=                                                                      = 00077100
*=          -+------------>   I T S      M E . <-------------          = 00077200
*=                                                                      = 00077300
*=                            FRENCH SUBTITLE---------> "C'EST MOI."    = 00077400
*=                                                                      = 00077500
*====================================================================== 00077600


*%%%%%%%%%%%%%%%%%%%%%%%% R E C A P %%%%%%%%%%%%%%%%%%%%%%%%%%%%%%%%%%%% 00077800
*%                                                                      % 00077900
*%                                                                      % 00078000
*%    THE INSTRUCTION STREAM WE WENT THROUGH WAS AS FOLLOWS:            % 00078100
*%                                                                      % 00078200
*%       IN  '$PRIVATE' :                                               % 00078300
*%                          LA   1,DOUBLE       LA OF F.P.NUMBER        % 00078400
*%                          L    15,=V(IHCSSQRT) ADDRESS OF ROUTINE     % 00078500
*%                          BALR 14,15 BRANCH WITH RETURN ADDR IN 14    % 00078600
*%                                                                      % 00078700
*%       IN   'IHCSSQRT':                                               % 00078800
*%                          BC   15,10(15)      BRANCH AROUND CONSTANTS % 00078900
*%                          STM  14,15,12(13)   SAVE REGS                 00079000
*%                          L    14,0(1)        LOAD F.P NUMBER IN 14   % 00079100
*%                          LE   4,0(14)        F A I L I N G   I N S T % 00079200
*%                                                                      % 00079300
*%                                                                      % 00079400
*% 0  I SHOULD HAVE LOADED THE ADDRESS OF A PARAMETER LIST IN REGISTER% 00079500
*%    1 INSTEAD OF THE ADDRESS OF THE NUMBER I WANTED TO TAKE THE      % 00079600
*%    SQUARE ROOT OF. THE PARAMETER LIST MAY BE FOUND IN THE LOCATION % 00079700
*%    WHOSE SYMBOLIC NAME IS 'ARG' IN '$PRIVATE'.                      % 00079800
*%                                                                      % 00079900
*% 0  A VERY IMPORTANT POINT TO REMEMBER IS THAT WE CAN CAUSE SOME     % 00080000
*%    OTHER ROUTINE TO FAIL BY PASSING INCORRECT PARAMETERS TO IT.     % 00080100
*%    AS IN THIS CASE, AT FIRST IT WOULD APPEAR THAT THE SUBROUTINE    % 00080200
*%    WAS FAILING, IT WAS REALLY THE INCORRECT PARAMETERS WHICH CAUSED% 00080300
*%    THE PROBLEM.                                                     % 00080400
*%                                                                      % 00080500
*%    THUS, ON THIS HAPPY NOTE THE DUMP ANALYSIS PROJECT COMES TO      % 00080600
*%                                  A CLOSE.                            % 00080700
*%                                                                      % 00080800
*%%%%%%%%%%%%%%%%%%%%%%%%%%%%%%%%%%%%%%%%%%%%%%%%%%%%%%%%%%%%%%%%%%%%%%% 00080900
```

```
LOC  OBJECT CODE    ADDR1 ADDR2  STMT   SOURCE STATEMENT                                    F08APR70   9/16/70
                                 811 ********************************************************************** 00081100
                                 812 *                                                                    * 00081200
                                 813 *    O PLEASE NOTIFY YOUR INSTRUCTOR OF YOUR COMPLETION BY DISPLAYING * 00081300
                                 814 *      THE   B L U E   A N S W E R C U E .                           * 00081400
                                 815 *                                                                    * 00081500
                                 816 *    O PLEASE USE THIS SHEET FOR ANY COMMENTS YOU HAVE CONCERNING THIS* 00081600
                                 817 *      PROJECT.                                                      * 00081700
                                 818 *                                                                    * 00081800
                                 819 *                                                                    * 00081900
                                 820 ********************************************************************** 00082000


                                 822 ***************************** C O M M E N T S ************************ 00082200
```

```
 LOC  OBJECT CODE    ADDR1 ADDR2  STMT   SOURCE STATEMENT                                  00082400
                                  824          END
000170 00000000                   825                =V(IHCSSQRT)
000174 00000000                   826                =V(PRINT)
```

| POS.ID | REL.ID | FLAGS | ADDRESS |
|---|---|---|---|
| 01 | 01 | 08 | 000169 |
| 01 | 02 | 1C | 000170 |
| 01 | 03 | 1C | 000174 |

| SYMBOL | LEN | VALUE | DEFN | REFERENCES | | |
|---|---|---|---|---|---|---|
| A | 00004 | 000148 | 00136 | 0103 | 0110 | |
| ARG | 00001 | 000168 | 00144 | | | |
| B | 00004 | 00014C | 00137 | 0100 | 0112 | 0117 |
| C | 00004 | 000150 | 00138 | 0104 | | |
| DOUBLE | 00008 | 000140 | 00135 | 0106 | 0107 | 0144 |
| FOUR | 00004 | 00013C | 00134 | 0102 | | |
| MESSAGE | 00121 | 0000C0 | 00132 | 0122 | | |
| SAVIT | 00004 | 000078 | 00130 | 0005 | | |
| TWO | 00004 | 000154 | 00139 | 0111 | | |
| XSUB1 | 00008 | 000158 | 00141 | 0116 | | |
| XSUB2 | 00008 | 000160 | 00142 | 0121 | | |

```
NO STATEMENTS FLAGGED IN THIS ASSEMBLY
*STATISTICS*     SOURCE RECORDS (SYSIN) =   824
*OPTIONS IN EFFECT*   LIST, NODECK, LOAD, NORENT, XREF, NOTEST, ALGN, OS, LINECNT =  55
  974 PRINTED LINES
```

```
F.P. REGS.  43.121000 00000000   C2.A80000 00000000   00.000008 00000000   00.000000 00000000

REGS 0-7     FFFFFF2E 0005AC38 0001D844 00000000    0001B060 0001B3C0 0001D9F8 0001BD40
REGS 8-15    0001D828 00000000 0001D850 00000000    6F05AAFE 0005AB70 43121000 0005B210

000000    00000000 00000000 00000000 00000000    0005AAF8 00000000 FFF50000 8F051F2A  *...................8.....5......*
000020    00040003 50006A3E FFE50005 AF05B226    0000FF00 00000000 FE040133 80000A1E  *.........V.......................*
000040    000676F8 0C000001 00001468 00005920    083D4200 0000996C 00040000 00007498  *...8.............................*
000060    00040000 00007BC8 00040000 00007588    00000000 00012D10 C0040000 0000751A  *.......H.........................*

05AAE0    4880B026 12884780 91C85820 200C5860    9BFA4166 00015060 90ECD00C 05C04110  *.........H.......................*
05AB00    C072D747 10001000 5010D008 58D0D008    7800C146 3C007820 C1367C20 C1427C20  *..P................A.....A...A...*
05AB20    C14A3B02 6000C13A 4110C13A 58F0C16A    05EF7840 C1427C40 C14E7820 C1463122  *A.....A...A..0A.... A.. A...A...*
05AB40    3A203D24 7020C152 7820C146 31223B20    3D247020 C15A4110 C0BA58F0 C16E05EF  *......A...A.........A......0A...*
05AB60    000058D0 D0045810 D008980C D01407FE    00000000 00000000 00000000 6F05AB32  *................................*
05AB80    0005B210 00000000 00000000 00000000    00000000 00000000 00000000 00000000  *................................*
05ABA0    00000000 00000000 00000000 00000000    00000000 00000000 F1E3C8C9 E240C9E2  *.......................1THIS IS*
05ABC0    40E3C8C5 40E2D6D3 E4E3C9D6 D540E3D6    40E3C8C5 40D8E4C1 C4D9C1E3 C9C340D9  * THE SOLUTION TO THE QUADRATIC R*
05ABE0    D6D6E340 D7D9D6C2 D3C5D44B 40404040    40404040 40404040 40404040 40404040  *OOT PROBLEM.                    *
05AC00    40404040 40404040 40404040 40404040    40404040 40404040 40404040 40404040  *                                *
05AC20    40404040 40404040 40404040 40404040    40000000 41400000 43121000 00000000  *                  .... ..........*
05AC40    41200000 41B00000 C2150000 41200000    00000000 00000000 00000000 00000000  *........B........................*
05AC60    8005AC38 47F0979E 0005B210 0005ACD2    90ECD00C 05C004F0 07004110 C0100511  *.....0.........K.......0........*

05B220    0000780E 00003220 4740F074 4780F06A    580E0000 8C000019 89000018 8A100003  *......... 0...0.................*
05B240    47BCF038 5A00F0D4 18E05A1E F0E8580E    F0E01D01 5A1EF0D8 1E1E5010 F0F4D200  *..0...0M....0Y..0.....0Q....04K.*
05B260    F0FCF0F4 7D00F0F4 7E00F0F4 34003D20    7E00F0F0 3B023400 3A0258ED 000C92FF  *0004..04..04......00............*
05B280    D00C07FE 7000F0F4 9001D014 181D18EF    58F0F0D0 41DF00C4 50D10008 501D0004  *......04.........00....D.J......*
05B2A0    9023D014 4120E0F4 4130E137 440F0056    0501040E 07009823 D0144110 E0FC180E  *.......4........................*
05B2C0    58FCE0F8 05EF18F0 58DD0004 9500F113    4770F0C8 9780F0F4 41E0F0F4 47F0F012  *.0.8...0......1...0H..04..04.00.*
05B2E0    0005B358 01000004 21AE7D00 206B9F3C    FFEB605E FFFAD818 0D73F185 1D73F185  *......................Q...1...1.*
05B300    00000001 41BB0004 00C5C8F0 0005B324    0005B320 0005B31C 8005B304 000000FB  *..........H0....................*
05B320    9500603C 0000002D C9C8C3F2 F5F1C940    E2D8D9E3 40D5C5C7 C1E3C9E5 C540C1D9  *........IHC251I SQRT NEGATIVE AR*
05B340    C7E4D4C5 D5E37EFF 50607090 95FF6002    078E50E0 70881BEE 47F0F11C 47F0F124  *GUMENT....................01..01.*
05B360    47F0F506 47F0F53E 47F0F680 47F0FAE4    47F0FAEC 47F0FB32 47F0FB80 47F0FCC8  *.05..05..06..0.U.0...0...0...0.H*
05B380    47F0FD3E 47F0FD64 47F0FD78 47F0FD8C    47F0FDA0 B521DE09 47F0FDB4 47F0FDC4  *.0...0...0...0...0.......0...0.D*
05B3A0    00005810 FE1C5810 FE405810 FE345810    FE2C5810 FE2C5810 FE305810 FE385810  *......... ......................*
05B3C0    FE3C0000 0005B548 000092FF FF1E9200    FF1E00C9 FF000000 00000000 00000000  *...................I............*
05B3E0    00000000 00000000 00000000 00000000    00000000 00000000 00000000 00000000  *................................*
05B400    00000000 00000000 00000000 00000000    00000000 0005C604 B512DE06 0005B494  *......................F.........*
05B420    4120B506 07FA1818 58201008 91BF2009    4780B2F2 95D72000 4770B2DA 95E22001  *...................2.P.......S..*
05B440    4770B2F2 47F0B21C 95E32000 4780B21C    95F92000 4780B21C 95F72000 4780B21C  *...2.0...T.......9.......7......*
05B460    18185820 1000D2C7 B3142000 00000000    00000000 92F0F1A5 47F0F128 92FFF1A5  *......K..............01..01...1.*
05B480    95FFF07C 4770F1F0 90EDF07C 41300008    41D0F19E 50E0FDF0 9200FE1B 1B111B22  *..0...10..0.......1....0........*
05B4A0    9012F10C 5810FE1C 182ED207 FE78E000    9180FE78 4780F168 5810F0BC 41303004  *..1.......K...........1...0.....*
05B4C0    9110FE78 4780F17C 58532000 5050F10C    41303004 9120FE78 4780F190 58532000  *......1.......1...........1.....*
05B4E0    5050F110 41303004 41E23000 50E0F07C    5010FE20 07FD41E0 F1B60501 000047F0  *..1......S....0.........1......0*
05B500    F1D45020 FE884183 20001892 07FE1B77    5070FEF0 5070FE0C 5070FEF4 58A0FE7C  *1M.................0.......4....*
05B520    91FFFE7C 4750F7D4 47F0F1F8 92FFFEF0    4120F69C 19260786 92FFFE1B 9200FEF1  *......7M.018...0..6...........1*
05B540    9200FE1A 47F0F4EC 5850FDFC 47F05332    1B554350 A0008B50 00014950 F25A47A0  *.....04......0..............2...*
05B560    F25C47F5 F20E47F0 F9A247F0 F29047F0    F2A247F0 F2D447F0 F2E247F0 F48247F0  *2..52..09..02..02..02M.02S.04..0*
05B580    F48847F0 F48847F0 F4A047F0 F2EC47F0    F4A847F0 F4B047F0 F31C47F0 F35247F0  *4..04..04..02..04..04..03..03..0*
05B5A0    F3AC47F0 F3EE47F0 F46C47F0 F3FA47F0    F4B8004C 5830FDD4 D2073080 30549240  *3..03..04..03..04......MK...... *
05B5C0    30A450A0 300C9280 300C45E0 F6F847F0    F27E47F0 F1F849D0 FEEC4740 F3FAD209  *............68.02..018..... 3.K.*
05B5E0    FE04FE10 47F0F3FA 41A0A001 1BDD50A0    FE0450D0 FE0847F0 F1F84370 A00141D0  *.....03................018......*
05B600    D00149D0 FEEC4740 F2C4D203 FE10FE04    D201FE18 FE0CD203 FE14FE08 4270FE0C  *....... 2DK.....K.....K.........*
05B620    4270FE0D 41A0A002 47F0F296 D200FE0E    A00141A0 A00247F0 F1F8D200 FE0FA001  *.........02.K..........018K.....*
05B640    47FCF2DA 4370A001 06705840 FE881A47    1B484740 F3084550 F6AE1A49 47F0F30A  *.02........ ....... 3...6....03.*
05B660    1A485990 FEF447C0 F3165090 FEF41894    47F0F2DA 4370A001 41A0A002 910FF1A5  *.....4..3....4...02............1.*
05B680    4710F338 1A971998 4720F6AE 47F0F1F8    19984740 F3424550 F6AE9240 90004190  *..3.......6..018... 3...6.. ....*
05B6A0    90014670 F33847F0 F1F84370 A00141A0    A0021848 1B491974 47D0F38A 910FF1A5  *....3..018................3...1.*
```

```
05B6C0   4780F6AE 12444780 F3821B74 06404440   FED24194 900141A4 A0014550 F6AE47F0   *..6.....3.... . .K..........6..0*
05B6E0   F35A0670 910FF1A5 4710F39C 4470FECC   47F0F3A0 4470FED2 41979001 41A7A001   *3.....1...3......03....K........*
05B700   47F0F1F8 41A0A001 91FEFE0C 4750F3D8   06DC49D0 FEEA4740 F1F8D203 FE04FE10   *.018..........3Q....... 18K.....*
05B720   D201FE0C FE18D203 FE08FE14 47F0F1F8   58A0FE04 58D0FE08 4370FE0C 06704270   *K.....K......018................*
05B740   FE0C47F0 F1F84560 F42041A0 A00147F0   F1F892FF FEF047F0 F4EC91FF FE1B4710   *...018..4......018...0.04......*
05B760   F4EC4560 F420D200 FE0CFE0D 58A0FE04   58DCFE08 47F0F1F8 9023FE80 910FF1A5   *4...4.K..............018......1.*
05B780   4710F434 9201F456 47F0F450 9202F456   18295920 FEF447A0 F4465820 FEF4D703   *..4...4..04...4......4..4....4P.*
05B7A0   FEF4FEF4 5B20FE88 5810FE20 05010000   47F0F1D4 5020FE88 41832000 18929823   *.4.4.............01M............*
05B7C0   FE8007F6 92FFFEF3 D200F480 A002D200   F481FE0F 47F0F492 00001B55 47F0F48C   *...6...3K.4...K.4....04......04.*
05B7E0   41500001 D200F625 FE0FD201 F623A001   41A0A003 47F0F4CC 41500005 47F0F4BC   *....K.6...K.6........04......04.*
05B800   4150000A 47F0F4BC 41500003 47F0F4BC   4150000B D200F623 A001D201 F624FEE8   *.....04......04.....K.6...K.6..Y*
05B820   41A0A002 8B500003 910FF1A5 4780F4DC   41505004 91FFFEF0 4780F4EC 9200FEF0   *..........1...4........0..4....0*
05B840   456CF5AA 91FFFE1A 4710F5AA 91FFFEF1   4710F59C 904DFE50 98EDF07C 07FED203   *..5.......5....1..5.......C...K.*
05B860   FE80E000 41E0E004 90EDF07C D200F622   FE8CD300 FEF8FE81 9400FE80 940FFE81   *..........0.K.6...L..8..........*
05B880   D603FE80 FEE44400 FE80984D FE504560   F5AA47F0 F4ECD207 FE80E000 41E0E008   *0....U..........5..04.K.........*
05B8A0   90EDF07C 984DFE50 D200F622 FE84D300   FEF8FE85 9400FE84 940FFE85 58C0FE84   *..0.....K.6...L..8..............*
05B8C0   5820FE80 92FFFEF1 1BBB43B0 F62291FF   FE804780 F58243B0 FE809180 FEF84780   *.......1....6.......5........8..*
05B8E0   F5984370 F6228A70 00014270 F6221BB7   4560F5AA 1A2B46C0 F5989200 FEF147F0   *5...6.......6.....5.....5....1.0*
05B900   F4EC91FF FEF04710 F4029180 FEF84710   F64E91FF FEF34780 F5EED201 F624F480   *4....0..4....8..6....3..5.K.6.4.*
05B920   41500060 9560FEF8 47A0F5DE D201F624   FEE84350 FEF88A50 0001910F F1A54780   *.......8..5.K.6..Y...8......1...*
05B940   F5EE4150 50044370 F6231277 47C0F62A   41479000 194847D0 F6161842 9057FDE4   *5.......6.....6........6......U*
05B960   4550F6AE 9857FDE4 182447F0 F5F81839   5810FE24 58151000 05010000 00004197   *..6....U...058..................*
05B980   900091FE FE0E4780 F6464370 FE0E0670   4270FE0E 91FFFE1A 4710F672 07F69200   *........6................6..6..*
05B9A0   FEF347F0 F1F891FF FE1A4710 F67292FF   FE1A91FF FEF14710 F5BA4370 F6228A70   *.3.018......6........1..5...6...*
05B9C0   00014270 F62247F0 F5BA9200 FE1A4370   F6221A27 47F0F5BA 90EDF07C 984DFE50   *....6..05.......6....05...0.....*
05B9E0   910FF1A5 4780F69C 91FFFE1B 4710F69C   4560F420 1B221B33 9C23F10C 980DF084   *..1...6.......6...4.......1...0.*
05BA00   92FFFC7C 07FE910F F1A54780 F6BA4560   F4205830 FDD85020 FE8045E0 F74447F0   *..0.....1...6...4....Q......7..0*
05BA20   F6CE47F0 F1D4910F F1A54780 F1D45810   FE1C5820 FDF045E0 F1A258E0 FDD0918C   *6..01M..1...1M.......0..1.......*
05BA40   F0334780 F6F24190 90015820 FE8007F5   90BFFE54 18CF18B3 92803000 9180CE78   *....62.........5................*
05BA60   4710C764 910FC1A5 4780C764 18195B10   CE881211 4780C764 5020CE80 18211801   *..G...A...G.........G..........*
05BA80   4510C72C 0A0A5010 CDF458D0 CE880620   4420C7CE 4020CE50 47F0C764 90BFFE54   *..G......4........G. ....0G.....*
05BAA0   18CF18B3 58303000 58E03000 4133E000   412CC03C 4400C052 05010404 181B58DC   *................................*
05BAC0   C0B8D20F D00CC07C 50D0C0C8 41D0C0C4   58F0CE00 05EF58D0 CDF412DD 4780C7BA   *..K........H...D.0.......4....G.*
05BAE0   5810CE1C 5820CDF0 18FC45E0 C1A25810   CE884820 CE504420 C7CE4120 20014192   *.......0....A...........G.......*
05BB00   9C0018C2 181D0A0A 1B225020 CDF45820   CE805830 B00498BF CE545830 30001233   *..............4................*
05BB20   078E47F0 E004D200 1000D000 9016FE94   1B331B44 5040FE90 4160F9A1 5060FE04   *...0..K............. ....9.....*
05BB40   9200F99D D203F99E F99D181A 1B225860   FDFCDDFF 10006394 4772F808 41101100   *..9.K.9.9..................8.....*
05BB60   47F0F7F6 47F0F8A8 47F0F8CA 47F0FA18   47F0FA20 47F0FA28 47F0FA10 47F0F9B6   *.076.08..C8..C...0...0...0...09.*
05BB80   47F0F9BE 47F0FA30 47F0FA38 47F0FA40   47F0FA48 47F0F9FE 47FCF9D0 47F0FA50   *.09..0...0...0. .0...09..09..0..*
05BBA0   47FCFA5E 47F0F9F2 47F0F9EA 47F0F8FC   47FCF90C 47F0F860 4160F7F6 9016FEAC   *.0...092.09..C8..09..08...76....*
05BBC0   5830FDD4 D2073080 305CD2C0 30A41000   50103C0C 92803000 45E0F6F8 47FCF88C   *...MK.....K...............68.08.*
05BBE0   47F0F9B0 9816FEAC 4930FEEC 47D0F914   D205FE08 FE14D203 FEC4FE10 47F0F914   *.09...........9.K.....K..D...09.*
05BC00   D100FE8F 10008B40 00035A40 FE905A40   FE905A40 FE8C5040 FE904110 100147F0   *J...... ... ... ... ... .......0*
05BC20   F7F64130 30014930 FEEC47C0 F8E8D203   FE10FEC4 D201FE18 FE0CD203 FE14FE08   *76..........8YK....DK.....K.....*
05BC40   5010FEC4 4240FE0C 4240FE0D 5030FE08   47F0FA06 4560F95C 921EF99E 4560F980   *...D. ... .......0....9...9...9.*
05BC60   47F0FA06 4560F95C 4630F928 9222F99E   4560F980 5810FEC4 5830FE08 47F0FA06   *.0....9...9...9...9....D.....0..*
05BC80   91FEFE0C 4750F94E 4930FEEA 47C0FA06   D203FEC4 FE10D201 FE0CFE18 D203FE08   *......9.........K..D..K.....K...*
05BCA0   FE1447F0 FA064340 FE0C0640 4240FE0C   47F0F91C 91FFF99E 078691FF FEF94780   *...0... ... . ...09...9......9..*
05BCC0   F9764240 F9A09200 FEF947F0 F97A4240   F99F91FF F99FC786 9016FEAC 9816FE94   *9.. 9....9.09.. 9...9...........*
05BCE0   41A0F99E 91FEF99D 4780F1F8 41A0F99C   47F0F1F8 06000000 00009200 F99DD203   *..9...9...18..9..018........9.K.*
05BD00   F99EF99D 9016FE94 9816FEAC 07F69280   F99F47F0 F8C29208 F99ED6C0 F99FFE93   *9.9..........6..9..08B..9.0.9...*
05BD20   4560F98C 47F0FA06 12444720 F9DA4140   00019218 F99E4240 F99F4560 F98047F0   *..9..0......9.. ....9.. 9...9..0*
05BD40   FA064560 F95C47F0 FA064240 F99F92FF   FEF947F0 FA069212 F99E4240 F99D1B44   *....9..0... 9....9.0....9.. 9...*
05BD60   5040FE90 47F0F8C2 9210F99E 47F0FA02   9214F99E 47F0FA02 9216F99E 47F0FA02   *. ...08B..9..0....9..0....9..0..*
05BD80   9224F99E 47F0FA02 920AF99E 47F0FA02   920CF99E 47F0FA02 920EF99E 47F0FA02   *..9..0....9..0....9..0....9..0..*
05BDA0   9220F99E 47F0FA02 4560FABA 1B445040   FE9047F0 F7F69200 FEFAD200 FEFB1000   *..9..0..... ...076....K.....*
05BDC0   5010FEC8 1B44D500 1001FEFB 4780FA84   41404001 41101001 47F0FA6E D5001002   *...H..N..........  ......0..N...*
05BDE0   FEFB4770 FAA24140 40014110 1001910F   F1A54780 FA7847F0 FAA692FF FEFA5810   *.......  .......1......0........*
05BE00   FEC84560 FABA91FF FEFA4710 FA0647F0   FA681244 41101001 07C618A1 0640910F   *.H.............0.........F... ..*
05BE20   F1A54710 FAD64440 FECC47F0 FADA4440   FED24194 90014114 A00107F6 9200FB07   *1....0. ...0... .K.........6....*
```

```
05BE40   47F0FAF0 920FFB07 95FFF07C 4770F1F0   90EDF07C 41300004 45D0F13C 05010000   *.0.0......0...10..0.......1.....*
05BE60   92FFFE1B 41A20000 41832000 189A1BBB   1B77910F FB074780 FB264170 00061B55   *................................*
05BE80   904CFE50 98EDF07C 07FE90ED F07CD203   FE80E000 D200FEFC FE809400 FE80940F   *......0.....0.K.....K..........*
05BEA0   FE81D603 FE80FEE4 4400FE80 984CFE50   9200FEFD 43B0FEFC 18C81BC9 19CB4740   *..0....U..................H.I... *
05BEC0   FBC006BC 44B7FED8 419B9001 904CFE50   980CF084 47F0E004 90EDF07C 984CFE50   *.......Q...........0..0....0.....*
05BEE0   D207FE80 E0005820 FE8058B0 FE8454B0   FF00D200 FEFFE004 4CB0FEFE 4830FEFE   *K................K.............*
05BF00   41400100 11635060 FF0418C8 1BC919C3   47B0FBE4 92FFFEFD 12774770 FC289180   *. .........H.I.C...U...........*
05BF20   FE784710 FC2812CC 4780FC28 06C044C0   FED8412C 20011BBC 46B0FC28 186C19BC   *................Q..............*
05BF40   4720FBEE 186B1964 47D0FBF6 18641277   4770FC04 9180FE78 47C0FC08 5460FF04   *...........6...................*
05BF60   06604467 FED84196 90014126 20011BB6   46B0FBB2 904CFE50 980CF084 47F0E008   *.....Q....................0..0..*
05BF80   9023FE80 91FFFE1B 4780FC40 91FFFEFD   4780FB74 47F0FC1C 12774770 FC7C9201   *........... .........0.........*
05BFA0   FCA89180 FE784710 FCA24BA0 FEEE9101   A0024710 FCA25830 FDDC45E0 F7444700   *............................7...*
05BFC0   000058E0 FC7C1898 92FFFE1B 9823FE80   47F0FC34 9202FCA8 1B9A1829 9180FE78   *....0............0..............*
05BFE0   4710FCA2 4BA0FEEE 9601A002 12554780   FC9E9602 A0024150 5C015810 FE200501   *..............................*
05C000   000047F0 FC6E41A2 00004183 2000189A   9823FE80 91FFFEFD 4780FB6A 47F0FBB2   *...0.........................0..*
05C020   90EDF07C 984CFE50 91FFFE1B 4710FD2C   910FFB07 4710FD06 9180FE78 4710FD2C   *..0...........................*
05C040   4BA0FEEE 9101A002 4780FD2C 5810FE1C   05010100 47F0FD2C 18A247F0 FCE81B9A   *......................0.....0.Y..*
05C060   18299180 FE784710 FD204BA0 FEEE1255   4780FD20 9602A002 5810FE20 05010200   *..............................*
05C080   47000000 1B221B33 9023F10C 980CF084   92FFF07C 07FE95FF F07C4770 F1F090ED   *...........1...0...0.....0...10..*
05C0A0   F07C182E 5810FE1C 05010300 47000000   9804F084 92FFF07C 47F0E004 95FFF07C   *0................0...0..0....0.*
05C0C0   4770F1F0 90EDF07C 5850FDFC 47F051C8   95FFF07C 4770F1F0 90EDF07C 5850FDFC   *..10..0......0.H..0...10..0.....*
05C0E0   47F051D0 95FFF07C 4770F1F0 90E6F07C   5850FDFC 47F051F0 95FFF07C 4770F1F0   *.0....0...10.W0......0.0..0...10*
05C100   90E6F07C 5850FDFC 47F051FA 50D0FF08   90E5F07C 5850FDFC 47F05144 5850FDFC   *.W0......0.......V0......0......*
05C120   47F05094 0005C908 0005F888 0005C72C   0005C73C 0005C74C 0005C75C 41540004   *.0....I...8...G...G...G...G.....*
05C140   58440004 47F0C068 1B774374 00000000   04000C00 0005C298 0005C8F0 C02C0670   *.....0................B...H0....*
05C160   42740019 00000000 06701277 4770C0C2   00000000 0005E568 00004110 0005CEB0   *...............B......V.........*
05C180   0005E050 0005D9EA 0005CFEA 0005D4E8   0005DC04 0005CF5A 0005D13A 0005F888   *......R.......MY.........J...8.*
05C1A0   0005E3BC 43740C1A 06704274 001A4110   C7720A30 47F0C1F4 4510C0F6 FD0000B0   *..T.............G....0A4...6....*
05C1C0   58010000 0A0A18B1 41880004 58180000   91401000 4710C11A 91808000 4780C0FE   *................. ....A........*
05C1E0   47F0C16C 00000000 00000000 92069008   D200900F 100450B0 A01050B0 D048D703   *.0A.............K.............P.*
05C200   D04CD04C 50109000 58F0C6FA 181905EF   47FFC14A 47F0C2CA 47F0C1CE 00000000   *.........0F.......A..0B..0A.....*
05C220   411000B0 D200A000 9000D200 9000A000   D2002000 9000D200 90002000 41200000   *....K.....K.....K.....K.........*
05C240   07000001 00020004 00000000 00000000   00000000 00000000 000FFFFF 1017A14C   *..............................*
05C260   4131001E 95403000 00000000 00000000   00000000 000000F2 C940E2E3 D6D74040   *..... ..................2I STOP  *
05C280   F1C140D7 C1E4E2C5 40000000 00000000   00000A0A 181B0700 90ECD00C 5880F040   *1A PAUSE ......................0 *
05C2A0   50D0F050 18CD41D0 F04C50D0 C0081871   18604130 8F345030 F0484100 F02A47F0   *..0.....0...............0...0..0*
05C2C0   F032C9C8 C3E2E3C1 C5401B11 0A0892FF   8F3818F0 0700053F 0005B358 0005C8F0   *0.IHCSTAE .........0..........H0*
05C2E0   4B007082 40007076 9601706F 4110C762   0A304170 C25A1868 41880004 58180000   *.... .........G.....B..........*
05C300   41110000 91401000 4780C24C 91808000   4780C22E 07F758F0 C74605EF 92401000   *..... ....B.......B..7.0G.... ..*
05C320   47F0C242 181A4100 015441E0 186F4840   E00041D0 60C458F0 6DCC05EF 58106E1C   *.0B............ .....D.0........*
05C340   05010400 47F0509A 4100536C 581060BC   19014780 50C60501 040047F0 509A5810   *.....0................F.....0....*
05C360   6E489500 10004780 50E49200 10004500   50E2C9C8 C3C1C4D1 E2E30AC9 58106E4C   *.........U.......SIHCADJST......*
05C380   12114780 50F60A0E 47F05104 07004110   51020511 00000000 00000A0E 95FF6F38   *.....6...0....................*
05C3A0   47705126 58106F34 98241020 986F1030   47F05120 C00000F0 5810511C 0A0D4100   *.................0.....0........*
05C3C0   00040A3C 58D06F08 58E0D00C 58206E00   92002013 18F4980C D01407FE 182F584D   *....................4..........*
05C3E0   00105040 20C05840 2E445830 2E289140   40044780 517A4110 516A0511 02000000   *... ... .......  ................*
05C400   025D5030 10009202 10000A0E 47F05190   07004110 51860511 02000000 005D5030   *.............0................*
05C420   10009202 10000A0E 50102E4C 58102E1C   18424120 2DF80501 00FF4700 00001824   *....................8..........*
05C440   92FF207C 451C51B8 0005C298 00000000   41000000 41110000 0A3C98E5 207C07FE   *..........B................V....*
05C460   920151DF 47F051D4 920251DF 186F182E   58106E1C 05010300 47000000 92FF607C   *.....0.M......................*
05C480   98066084 47F0E004 186F92FF 6F1D47F0   5204186F 92006F1D 94BF6F18 075091FF   *.....0.........0..............*
05C4A0   6F1D4710 521CD208 52A16F28 41105290   47F05226 D20852A1 6F1F4110 52981B44   *......K..........0..K..........*
05C4C0   4340E000 18344940 52E847C0 523A4830   52E80630 4430532C 95006F1D 4780525C   *. ..... .Y.......Y............*
05C4E0   F2246F15 52AA4F40 6F104040 53041244   478052FC 41203013 40205298 5A205308   *2...... ..  ............ .......*
05C500   91FF6F1D 4710527E D2012000 52EC9280   200247F0 5288D201 200052EA 92402002   *........K...........0..K...... ..*
05C520   92002003 47F052EE 0105C274 0005C270   00008000 C9C8C3F0 F0404040 40404040   *.....0....B...B.....IHC00       *
05C540   40404040 40404040 40404040 40404040   40404040 40404040 40404040 40404040   *                                *
05C560   40404040 40404040 40404040 40404040   40404040 40404040 40404040 41604120   *                              ....*
05C580   003A0200 40000A23 92FF607C 91FF6F1D   4780530C 98E6607C 45E0F044 00000000   *.... ................W....0.....*
05C5A0   0005C530 58E0607C 41E4E001 50E0607C   92FF607C 41106F18 41000001 0A0198E6   *..E......U....................W*
```

```
05C5C0  607C07FE D20052AA E0014120 FDF81B00  5000F110 5810FE1C C50100FF 47F05362  *....K........8....1..........O..*
05C5E0  D2432001 560D92F0 20004120 00455810  FE1C0501 02004700 000092FF F07C45E0  *K......O......................O...*
05C600  F0440010 91012000 58202000 47801010  58202000 4020F03E 5830FDE0 189045E0  *0..................  .0.........*
05C620  F7444700 00001B33 47F09002 54545454  54545454 54545454 54545454 54545454  *7........O.......................*
05C640  54545454 54545454 54545454 54545454  54545454 54545454 54545454 54545454  *................................*
05C660  54545454 54545454 54545454 00545454  54545454 54445444 50085454 54545454  *................................*
05C680  54545454 54545454 54505454 1C4C5454  54545454 54485448 08545454 54545454  *................................*
05C6A0  54545454 54545454 40405454 54545454  54545454 54545454 54545454 54545454  *........  .....................*
05C6C0  54545454 54545454 54545454 54545454  54545454 54545454 54545454 54545454  *................................*
05C6E0  54545454 54545454 54545454 540C5454  2C282430 3C185454 54545454 54545410  *................................*
05C700  54545420 54545454 54545454 54545434  54545438 54145454 54545454 04040404  *................................*
05C720  040404C4 04045454 54545454 0005C790  0005C77C 0005C76C 00000000 0005C7D4  *...............G...G...G.......GM*
05C740  0005C77C 0005C770 8005B394 0005C814  0005C77C 0005C774 8005B394 0005C854  *..G...G.......H...G...G.......H.*
05C760  0005C77C 0005C778 8005B394 000000D3  000000D4 000000D5 000000E7 00000000  *..G...G........L...M...N...X....*
05C780  C3D6D4D7 C9D3C5C4 E5C1D9C9 C1C2D3C5  0000003D C9C8C3F2 F1F1C940 C9C2C3D6  *COMPILEDVARIABLE....IHC211I IBCO*
05C7A0  D4406040 C9D3D3C5 C7C1D340 40404040  40404040 40C6D6D9 D4C1E340 C3C8C1D9  *M . ILLEGAL           FORMAT CHAR*
05C7C0  C1C3E3C5 D940E2D7 C5C3C9C6 C9C5C440  40000000 00000039 C9C8C3F2 F1F2C940  *ACTER SPECIFIED  .......IHC212I *
05C7E0  C9C2C3D6 D4406040 C6D6D9D4 C1E3E3C5  C440C961 D66B40C5 D5C440D6 C640D9C5  *IBCOM . FORMATTED I.O. END OF RE*
05C800  C3D6D9C4 40D6D540 E4D5C9E3 40404040  400C0000 0000003C C9C8C3F2 F1F3C940  *CORD ON UNIT      .......IHC213I *
05C820  C9C2C3D6 D4406040 E4D5C6D6 D9D4C1E3  E3C5C440 D9C5C1C4 6B40C5D5 C440D6C6  *IBCOM . UNFORMATTED READ. END OF*
05C840  40D9C5C3 D6D9C440 D6D540E4 D5C9E340  40404040 0000004D C9C8C3F2 F3F1C940  * RECORD ON UNIT      ....IHC231I *
05C860  C9C2C3D6 D4406040 C4C9D9C5 C3E340C1  C3C3C5E2 E240E2E3 C1E3C5D4 C5D5E340  *IBCOM . DIRECT ACCESS STATEMENT *
05C880  E4E2C5C4 40E6C9E3 C8D6E4E3 40C4C5C6  C9D5C540 C6C9D3C5 40D6D540 E4D5C9E3  *USED WITHOUT DEFINE FILE ON UNIT*
05C8A0  40404040 40C9C8C3 F9F0F4C9 40C1E3E3  C5D4D7E3 40E3D640 C4D640C9 61D640C4  *     IHC904I ATTEMPT TO DO I.O D*
05C8C0  E4D9C9D5 C740C6C9 E7E4D740 D9D6E4E3  C9D5C540 C6D6D940 C1D540C9 61D640E3  *URING FIXUP ROUTINE FOR AN I.O T*
05C8E0  E8D7C540 C5D9D9D6 D90C42E1 00C00A14  47F0F00C 06C5D9D9 D4D6D500 90ECD00C  *YPE ERROR........00..ERRMON....*
05C900  47000000 47FCF028 58F0F590 91FFF013  071E92FF F42E07FF 18CF189D 41D0C3E4  *.....00..05...0.....4.........CU*
05C920  50D09008 5090D004 186145A0 C23C9240  20000630 06304430 C3D895FF C42E4780  *.............B.. ........CQ..D...*
05C940  C33A5880 C5AC58AC 600858A0 A0001B22  58F0C5B0 49A0C3CC 4770C074 92FFC42D  *C...E............0E...C.......D.*
05C960  5820F110 91FFC42F 4710C290 40A0C3CE  92FFC42F 4BA0C3D2 12AA47D0 C31A59A0  *..1...D...B. .C...D...CK....C...*
05C980  80004720 C31A89A0 0003418A 800091FF  800247E0 C0B29120 8003471C C0BE9620  *....C...........................*
05C9A0  800343A0 800241A0 A00142A0 80024120  2C001222 4780C0D4 92FFC42C 5020C3E0  *.......................M..D...C.*
05C9C0  47FC00FC 95008000 4780C0FC D5008000  80024720 C0FC4130 C56745E0 C308D245  *.O..........N...........E...C.K.*
05C9E0  4001C525 4590C2EC 47F0C2B0 41A0C126  92FFC438 91048003 4710C256 91208003  * .E...B..0B...A...D.......B.....*
05CA00  4710C11E D5008001 800247B0 C2569200  C43847F0 C18C9110 80034780 C17858A0  *..A.N.......B...D..0A.......A...*
05CA20  600895ED A0034780 C14295FF C42D4770  C15E58A0 60105BB0 A00C5890 A0084870  *........A...D...A..............*
05CA40  903E58AC A0104B70 A00E47F0 C17058F0  C5B058B0 F11412BB 4780C178 5870F118  *...........0A..0E...1.....A...1.*
05CA60  4BB0C3C8 45A0C25E 95FFC430 4780C2BC  91028003 4780C18C 45A0C226 58B06004  *..CH..B...D...B.......A...B.....*
05CA80  91018007 4710C1AE 41A00001 50A0B000  41106004 58F08004 05EF47F0 C1B41BAA  *......A..............0.....0A...*
05CAA0  50A0B000 95FFC438 4770C1E6 9200C438  45A0C23C 9101B003 4710C1D6 D20D40C1  *......D...AW..D...B.......A0K. .*
05CAC0  C56B47F0 C1DCD20D 4001C579 D21C400F  C5874590 C2EC45A0 C2D695FF C42C4780  *E..0A.K. .E.K. .E...B...B0..D...*
05CAE0  C20058D0 D0049200 C42F98EC D00C07FE  58F0C5B0 9200C42F 92FFF07C 1B221B33  *B.......D........0E...D...0.....*
05CB00  9023F10C 58E0C3E0 9200C42C 980DF084  58E0E000 07FE5890 D00458B0 900450B0  *..1...C...D...0.................*
05CB20  D00458F0 C5B405EF 5090D004 9200C2FA  92FFC2FB 412CC434 4590C2F4 9202C2FA  *...0E.........B...B...D...B4..B.*
05CB40  9200C2FB 07FA58BC 60005870 B0001277  078A1975 4720C27A 06704470 C2744590  *..B..................B.....B...*
05CB60  C2EC07FA D2004001 B0041835 06304430  C27441B3 BC011B75 4590C2EC 47F0C262  *B...K. .........B.........B..0B.*
05CB80  189A4130 C4E145E0 C3084090 C3CE4130  C4C645E0 C308D26E 4001C476 4590C2EC  *....D...C. .C...DF..C.K. .D...B.*
05CBA0  45A0C256 92FFC430 47F0C126 9200C430  45A0C226 45A0C2D6 9200C42F 58F0C5B0  *..B...D..0A...D...B...B0..D..0E.*
05CBC0  45E0F044 001095FF C42D077A 9200C42D  58106000 41000070 0A0A07FA 92F04000  *..0.....D.....D...............0 .*
05CBE0  41205001 5810C5B8 05010200 47000000  18421853 065007F9 58F0C5B0 4400F052  *......E................9.0E...0.*
05CC00  4120C3CE 05010204 07FE4130 C45545E0  C308D235 4001C440 4590C2EC 58C06004  *..C.........D...C.K. .D ..B.....*
05CC20  1BAA50AC 600047F0 C1E65860 C5AC58B0  60008980 00031886 1A8B88B0 00031B77  *.......0AW..E..................*
05CC40  1BAA43A0 80029120 80034780 C3664AA0  C3D494DF 800312AA 4780C388 4970C3D4  *............C...CM........C...CM*
05CC60  47B0C386 4A70C3D4 D23F4001 C4E592F1  40004590 C2F041E0 B0CE40E0 C3CE4130  *..C...CMK. .DV.1 ...B0.... .C...*
05CC80  402245E0 C3084130 40314CA0 C3CE45E0  C30849A0 C3D64770 C3B0D206 4036C439  * ...C... . .C...C...C0..C.K. .D.*
05CCA0  4590C2EC 42708002 4B80C3D0 46B0C350  9200C42E 47F0C1F2 000400D9 00DA0000  *..B.......C...C...D..0A2...R....*
05CCC0  000800CE 010001FF D2002001 20000000  00000000 00000000 00000000 000C0000  *........K.....................*
05CCE0  00000000 00000000 00000000 00000000  00C00000 00000000 00000000 00000000  *.....................  ..........*
05CD00  00000000 00000000 00000000 00000000  00C00000 00000000 00000000 00000000  *................................*
05CD20  00F0947A 04000000 00D6D940 D6E5C5D9  C9C8C3F9 F0F2C940 C5D9D9D6 D940D5E4  *.O.......OR OVERIHC902I ERROR NU*
```

```
05CD40   D4C2C5D9 40404040 4C4040D6 E4E340D6   C640D9C1 D5C7C540 D6C640C5 D9D9D6D9   *MBER        OUT OF RANGE OF ERROR*
05CD60   40E3C1C2 D3C5C9C8 C3F9F0F1 C940C5E7   C5C3E4E3 C9D6D540 E3C5D9D4 C9D5C1E3   * TABLEIHC901I EXECUTION TERMINAT*
05CD80   C9D5C740 C4E4C540 E3D640E2 C5C3D6D5   C4C1D9E8 40C5D5E3 D9E840E3 D640C5D9   *ING DUE TO SECONDARY ENTRY TO ER*
05CDA0   D9D6D940 D4D6D5C9 E3D6D940 C6D6D940   C5D9D9D6 D9404040 404040E6 C8C9D3C5   *ROR MONITOR FOR ERROR       WHILE*
05CDC0   40D7D9D6 C3C5E2E2 C9D5C740 C5D9D9D6   D9404040 40E2E4D4 D4C1D9E8 40D6C640   * PROCESSING ERROR    SUMMARY OF *
05CDE0   C5D9D9D6 D9E240C6 D6D940E3 C8C9E240   D1D6C240 4040C5D9 D9D6D940 D5E4D4C2   *ERRORS FOR THIS JOB   ERROR NUMB*
05CE00   C5D94040 40D5E4D4 C2C5D940 D6C640C5   D9D9D6D9 E2C9C8C3 F9F0F0C9 40C5E7C5   *ER   NUMBER OF ERRORSIHC900I EXE*
05CE20   C3E4E3C9 D6D540E3 C5D9D4C9 D5C1E3C9   D5C740C4 E4C540E3 D640C5D9 D9D6D940   *CUTION TERMINATING DUE TO ERROR *
05CE40   C3D6E4D5 E340C6D6 D940C5D9 D9D6D940   D5E4D4C2 C5D94040 404040E2 E3C1D5C4   *COUNT FOR ERROR NUMBER     STAND*
05CE60   C1D9C440 C6C9E7E4 D74040E4 E2C5D940   C6C9E7E4 D7404040 E3C1D2C5 D5406B40   *ARD FIXUP  USER FIXUP   TAKEN . *
05CE80   C5E7C5C3 E4E3C9D6 D540C3D6 D5E3C9D5   E4C9D5C7 C0085870 0005C8F0 0005F888   *EXECUTION CONTINUING......H0..8.*
05CEA0   0005B358 0005FC28 0005E56E 95007040   0005D3A8 0005D5CA 0005D3A8 0005D9EA   *...........V.... ..L...N...L...R.*
05CEC0   0005CF96 0005CFEA 0005CF96 0005CFEA   0005D196 0005D4E8 0005D196 0005D4E8   *..................J...MY..J...MY*
05CEE0   0005D3A8 0005DA54 0005D3A8 0005DA54   0005DB2A 0005DC04 0005DB2A 0005DC04   *..L.......L.....................*
05CF00   0005CF1C 0005CF5A 0005D03E 0005D13A   90261FA0 18501B44 1B664340 50004360   *...............J............ ....*
05CF20   50011B64 47401042 1A360640 44401F8C   126647A0 10381066 41242001 92402000   *..... ..... . ............... ..*
05CF40   41202001 4660102C 98261FA0 181047F0   10024340 500147F0 101A9026 1F561850   *................0... ...0........*
05CF60   1B441B66 43405000 43605001 1B6447C0   10349240 30004130 30014660 10180640   *..... ............. ........... *
05CF80   44401F48 98261F56 181047F0 10024340   500147F0 10249026 1F1A1850 1B664360   *. .........0... ...0............*
05CFA0   50011B44 95E33000 4780104C 95C63000   47801026 41303001 4660100E 91045000   *.....T.......F..................*
05CFC0   47801044 92FF1F55 50402000 92001F55   98261F1A 181047F0 10024240 200047F0   *........ .............0... ...0*
05CFE0   103A4140 000147F0 10269026 1EC61850   1B664360 50019240 30004130 30014660   *... ...0.....F......... ........*
05D000   100C0630 91045000 47801042 92FF1F01   58402000 92001F01 1244477C 104C92C6   *................. .............F*
05D020   30009826 1EC61810 47F01002 1B444340   200047F0 102E92E3 300047F0 10389029   *.....F...0..... ...0...T...0....*
05D040   1E721850 1B441B66 43405000 43605001   1A241A36 92001EA6 41701EA5 41800002   *......... ......................*
05D060   126647C0 10D60630 95F03000 47401070   95F93000 47201070 D2007000 30000660   *.....0...0... ...9......K.......*
05D080   06704680 1022F212 1EA21EA4 0620D200   20001EA2 4640101A 91FF1EA6 47801066   *......2.......K...... ..........*
05D0A0   96802000 98291E72 181047F0 100295C1   30004740 109095C6 30004720 1090D200   *............0...A... ...F......K.*
05D0C0   70003000 DC007000 1DE647F0 10409540   30004780 10CA954E 30004780 10D69550   *.........W.0. . .............0..*
05D0E0   30004780 10D69560 30004780 10D292F2   1FE2D20A 1FF81FCD 92E11FB5 4190102A   *.....0.......K.2.SK..8.........*
05D100   90C11F2A 47F012AC 92F07000 47F01040   92FF1EA6 468010EE 940F1EA5 0620D200   *.A...0...0...0. ...............K.*
05D120   20001EA5 464010EE 47F0105A 06209200   20004640 10EE47F0 105A9026 1DEA1850   *..... ...0......... ...0........*
05D140   1B441B66 43405000 43605001 1A241A36   06200630 F3211DA7 2000DC01 1DA71DA2   *..... ..............3...........*
05D160   D2003000 1DA84660 103447F0 10520630   D2003000 1DA74660 104447F0 10524640   *K..........0....K..........0... *
05D180   10160630 92403000 46601048 98261DEA   181047F0 1002902C 1D1A4540 10489140   *..... .............0....... ... *
05D1A0   1D4E4780 101211BB 91055000 92FF1D55   47801038 91045000 47801040 50B02000   *.......................... ....*
05D1C0   982C1D1A 92001D55 181047F0 100240B0   200047F0 102A42B0 200047F0 102A05C0   *...........0.. ....0.......0....*
05D1E0   18501B66 1B779067 CDB04360 50014370   50021B88 1BAA1BBB 90ABCDA0 9200CD04   *.................................*
05D200   95F03000 4740C0AE 95F93000 4720C0AE   9680CD04 D100CDB3 300055A0 CDD84720   *.0... ...9.........J........Q..*
05D220   C0A28DA0 00034590 C08C4590 C08C5EB0   CDB047C0 C05A4AA0 CC9A90AB CDA09120   *.................................*
05D240   CD044780 C06A4170 70014130 30014660   C0209110 CD040784 9108CD04 4780C082   *.................................*
05D260   11BB50B0 CDB498AB CDA807F4 5EB0CDA4   47C0C09C 4AA0CC9A 4710C0A2 5AA0CDA0   *...........4....................*
05D280   07E998AB CDA04180 800147F0 C05E9540   30004780 C14C5040 CE18D502 CE19CE1D   *.Z.........0... ....A.. ..N.....*
05D2A0   4780C190 954B3000 4780C15C 95C53000   4780C16E 95C43000 4780C16E 954E3000   *..A.......A..E....A..D....A.....*
05D2C0   4780C19C 95503000 4780C19C 95603000   4780C1B0 92F1CE40 D20ACE56 CE2092D7   *..A.......A.......A..1. K......P*
05D2E0   CE13419C C02090C1 CD8805C0 58F0CBC0   58DCF0B8 D20FD00C F07C50D0 F0C841D0   *........A.....0....C.K...0...CH..*
05D300   F0C44110 CCF45030 100C9280 100CD200   CD603000 58F0CBBC 05EF58DC CD0812DD   *0D...4........K......0..........*
05D320   98C1CC7C 077992FC 300007F9 9180CD04   4780C06A 9200CDB3 47F0C03A 9130CD04   *.A.....0...9............0......*
05D340   4750C0F4 96A0CDC4 1B7747F0 C06A9110   CD044710 C0F49610 CD04D207 CDA8CDA0   *...4.......C.........4....K.....*
05D360   1BAA1BBB 90ABCDA0 94DFCD04 47F0C06A   9180CD04 4780C0DC 47F0C0F4 9180CD04   *..............0............0.4....*
05D380   4780C06A 9110CD04 4710C06A 47F0C176   9180CD04 4710C1C0 9640CD04 47F0C06A   *.............0A.......A.. ...0..*
05D3A0   9608CD04 47F0C1A4 902D1BC8 60201BB0   60401BB8 18DF58F0 1B044400 F0725890   *.....0A........... .....0....0...*
05D3C0   1B440549 12BB4770 102E12AA 4770102E   2B2247F0 110290AB 1BE091FF 1BE04780   *....................0...........*
05D3E0   10628CA0 000490AB 1BE0910F 1BE04780   105A8CA0 000490AB 1BE09250 1BE047F0   *.......................0..........0*
05D400   1066924F 1BE047F0 1066924E 1BE06820   19586A20 1BE01B87 5A801BEC 91101B3C   *.......0........................*
05D420   4710109A D2001BEB 50039180 1BEB4780   1096947F 1BEB5A80 1BE847F0 109A5B80   *....K....................Y.0....*
05D440   1BE81288 47A010A4 96041B3C 10B849B0   1BF047C0 10D49104 1B3C4710 10BE682C   *.Y...............0...M..........*
05D460   1AA047F0 11024BB0 1BF249B0 1BF04740   10D02B22 47F01102 6D201918 1BAA5DA0   *...0.....2...0. .....0..........*
05D480   1C148FA0 00028BB0 00012B44 784A18F0   12BB4780 10F26C4B 19189104 1B3C4780   *................0.....2........*
05D4A0   11002D24 47F01102 2C249140 1B3C4780   110C2122 91045000 92FF1B43 47801138   *.....0..... ....................*
```

```
05D4C0  70202000 4400F076 92001B43 18FD6820   1BB06840 1BB8982D 1B081810 47F01004  *......0............ .........0..*
05D4E0  60202000 47F0111C 902719C8 18501B66   43605001 1A3692FF 1A039105 50004780  *.....0.....H....................*
05D500  102A9104 50004780 10825870 20004 7F0  102E4870 20009240 19FC9200 1A031277  *................0....... .......*
05D520  4780106E 47201044 926019FC 4E701AB8   F3E71AB8 1AB896F0 1AC64120 1AC74150  *................3X.....0.F...G..*
05D540  1AB84140 000F95F0 50004770 108C4150   50014640 105E0630 92F03000 466010AC  *... ...0........... .....0......*
05D560  982719C8 181047F0 10021B77 43702000   47F0102E 19644740 10CE4780 10C60620  *...H...0.........0..... .....F..*
05D580  0630D200 30002000 466010A8 47F01078   46401096 0630D200 300019FC 466010BC  *..K..........0... ....K.........*
05D5A0  47F01078 06309240 300047F0 10B49560   19FC4770 10965830 19CC925C 30004130  *.0..... ...0....................*
05D5C0  30014660 10D247F0 1078902D 18E66060   199E9202 191A4540 101E6860 199E982D  *.....K.0.....W......... ........*
05D5E0  18E61810 47F01004 05C01850 1B661B77   1B8892FF C9019104 500C4780 C01E2B66  *.W...0..............I...........*
05D600  78602000 47F0C022 68602000 6060C996   9200C901 9180C996 4780C03E 9640C8FA  *.....0........I...I...I...... H.*
05D620  947FC996 6860C996 22664780 C3A0189F   58F0C8C2 4400F072 4360C996 5460C866  *..I...I.....C....0HB..0...I...H.*
05D640  9108C996 4780C062 41660008 41A6C73E   6C60A000 8A600002 41A6C86E 4A8A0000  *..I...........G...........H.....*
05D660  7060C996 9548C996 47A0C12A 9539C996   47C0C132 953CC996 4780C146 9545C996  *..I...I...A...I...A...I...A...I.*
05D680  4780C13A 4360C996 5460C86A 89600003   41A6C7BE 6C60A000 8A600002 41A6C88E  *..A...I...H.......G...........H.*
05D6A0  4A8A0000 7060C996 9540C996 4770C07A   4980C9AE 4720C0E2 6A60C856 6960C7BE  *......I.. I.......I....S..H...G.*
05D6C0  4740C0E2 6C60C7C6 4A80C890 6C60C816   41600018 6E60C84E 7060C996 9200C996  *. .S..GF..H...H.......H...I...I.*
05D6E0  58A0C996 4EA6C71E 4B60C89C 4780C182   41B6C71E 940FB00F 4FA6C726 50A6C71E  *..I...G...H...A...G.......G...G.*
05D700  5076C722 9246B000 6B66C71E 6C60C81E   47F0C0EA 41600040 47F0C0A6 41600048  *..G.......G...H..0..... .0......*
05D720  47F0C0A6 9180C997 4780C152 47F0C15E   9180C997 4780C16A 47F0C176 6C60C83E  *.0....I...A..0A...I...A..0A...H.*
05D740  4A80C898 47F0C0BA 6C60C7E6 4A80C8AE   47F0C0BA 6C60C846 4B80C8AE 47F0C0BA  *..H..0....GW..H..0....H...H..0..*
05D760  6C60C81E 4B80C898 47F0C0BA F363C9B6   C73AF353 C9BCC732 F353C9C1 C72A4400  *..H...H..0..3.I.G.3.I.G.3.IAG...*
05D780  F07618F9 4190C9B6 41D00010 95F09000   4770C1B8 4B80C890 41909001 06D047F0  *0..9..I......0....A...H........0*
05D7A0  C1A21B22 5020C9AA 91FF5003 4780C1E8   D200C9AD 50039180 C9AD4780 C1E0947F  *A.....I.......AYK.I.....I...A...*
05D7C0  C9AD5B20 C9AA47F0 C1E45A20 C9AA5020   C9AA9101 C8FA4710 C1F21A28 43605001  *I...I..0AU..I...I...H...A2......*
05D7E0  43705002 91FFC9E0 4780C204 1B7218A2   1AA712AA 4740C270 49A0C9B2 47A0C270  *......I...B........... B...I...B.*
05D800  1AA995F5 A0004740 C27006A0 19A94740   C24A95F9 A0004780 C2421BBB 43B0A000  *...5... B...... B..9....B.......*
05D820  41B0B001 42B0A000 47F0C270 92F0A000   47F0C220 92F1A000 189A41D0 D0014A80  *..........0B..0...0B..1.........*
05D840  C8909101 C8FA4710 C2704A20 C89091FF   C9E04780 C2704B70 C89041A0 70011222  *H...H...B...H...I...B...H.......*
05D860  47C0C27C 1AA29102 C8FA4710 C28841A0   A0041B6A 4740C378 4780C370 1A365030  *..B.....H...B........ C...C.....*
05D880  C9C61222 4780C2DA 4720C2D0 1022924B   30004130 30019620 C8FA1277 47C0C324  *IF....B...B.............H.....C.*
05D8A0  92F03000 41303001 4670C2C6 47F0C324   4620C2B6 18B747F0 C2EE9604 C8FA18B2  *.0........BF.0C...B....0B...H...*
05D8C0  47F0C2EE 924B3000 41303001 9620C8FA   127747C0 C3248B7 12DD47C0 C310D200  *.0B...........H.....C........C.K.*
05D8E0  30009000 41303001 41909001 46B0C30C   06D047F0 C31C46D0 C2F492F0 30004130  *..............C....0C...B4.0....*
05D900  300146B0 C3109120 C8FA4780 C2DA1266   07845830 C9C69104 C8FA4710 C3500630  *....C...H...B.......IF..H...C...*
05D920  9140C8FA 4780C346 4960C890 4780C35A   92F03000 4660C350 07F49140 C8FA4780  *. H...C...H...C..0....C..4. H...*
05D940  C3640630 92603000 4660C364 07F40630   92403000 4660C364 07F49140 C8FA4780  *C.........C..4... ....C..4. H...*
05D960  C2921A6A 91FFC9E0 4780C386 4A60C896   925C3000 41303001 4660C386 6860C97E  *B.....I...C...H.........C...I.*
05D980  982DC8C6 181047F0 10044360 50014370   50029240 30004130 30014660 C3A841D0  *..HF...0........... ........C...*
05D9A0  00031277 4770C3C2 41D00002 41A07003   9101C8FA 4780C3D2 41A0A004 4190C9F2  *......CB..........H...CK......I2*
05D9C0  1B3A5930 C8CA47A0 C3F84130 30014190   900146D0 C3D84360 50015830 C8CA47F0  *....H...C8..........CQ......H..0*
05D9E0  C38644D0 C9DA47F0 C392902D 14C66060   157E9201 14FA5890 15060549 583015C6  *C...I..0C....F.................F*
05DA00  1A3A4B30 14969104 50004780 102C92C5   300047F0 103092C4 300C5B80 15AA1288  *................E...0...D........*
05DA20  47401042 92403001 47F01048 92603001   10884E80 15B6F311 15B615BC 96F015B7  *. ... ...0............3......0..*
05DA40  D2013002 15B66860 157E982D 14C61810   47F01004 900714B0 6040151C 60601524  *K............F...0....... ......*
05DA60  05401850 92FF4489 91045000 47804018   2B667860 200047F0 401C6860 20002066  *. ............ .........0 .......*
05DA80  6960434E 92004489 474040A6 1B774370   50021B66 5D60455A 8F600002 8B700001  *.........  ......................*
05DAA0  2B447846 42361277 4780404E 6C47425E   29644720 40A6D202 409A5000 92FF4568  *......... ......... .K. .......*
05DAC0  91FF4569 47104094 1B664360 409B4B60   441E4720 40884A60 441E925C 30004130  *...... ..... ....... ..........*
05DAE0  30014660 407847F0 409E4260 409B1A63   D2036000 455E5810 449A0501 00000000  *.... ..0 ... ...K..............*
05DB00  92004568 47F040B6 D20340B2 50005810   449E0501 00000000 6840450E 68604516  *.....0 .K. ............. ......*
05DB20  980744A2 181047F0 10049029 13FA1850   1B441B66 43405000 43605001 8A400001  *.......0............ ....... ..*
05DB40  424010B2 D20110B4 5002954D 30004780   103C956C 30004780 103C4130 30014660  *. ..K.........................*
05DB60  102047F0 10BC4130 30015030 148A1B77   47F0105A 956B3000 47801062 41707001  *...0.............0..............*
05DB80  41303001 4660104A 47F010BC 4590109E   41303001 5030148A 1B771A24 47F0108E  *.........0...................0..*
05DBA0  955D3000 47801096 954C3000 47801096   417C7001 41303001 46601076 47F010BC  *.............................0..*
05DBC0  4590109E 47F010D0 427010B3 9003141A   058C5830 83E25810 83220501 00000000  *.....0.............S.........*
05DBE0  98038372 07F95820 13FA4340 50009200   20004120 20014640 10C49829 13FA1810  *.....9..... ......... . .D......*
05DC00  47F01004 90291320 92FF13C7 18501B44   1B664340 50004360 50018A40 00014240  *.0.........G....... ....... ... *
05DC20  106CD201 106E5002 1A241A36 0630925D   30004590 10521B24 0630926B 30004590  *..K............................*
```

```
05DC40   10520630 924D3000 920013C7 98291320   181047F0 10044B60 127647C0 10444260   *...........G.......0............*
05DC60   106D1B36 90011340 05805810 828E0501   00000000 980182DA 1B669540 30004770   *....... ................. ....*
05DC80   108A4160 60014130 300147F0 10751266   47C01044 07F9E2C4 41100000 41A00000   *...........0.........9SD........*
05DCA0   42640000 433E8000 44271000 45186A00   45F42400 46989680 475F5E10 483B9ACA   *...............4...............*
05DCC0   508AC723 0489E800 492540BE 40000000   5156BC75 E2D63100 59C9F2C9 CD04674F   *..G...Y... . .......SO...I2I....*
05DCE0   621D6329 F1C35CA5 6A446C3B 15F99267   729F4F27 26179A23 7B172EBA D6DDC73C   *....1C.......9..............O.G.*
05DD00   4E000000 00000000 4510801E 0A0A1871   58503020 1B664365 00060660 58550004   *...............................*
05DD20   88500010 4B50B07A 7B172EBA D6DDC73C   729F4F27 26179A23 6A446C3B 15F99267   *............O.G.............9..*
05DD40   621D6329 F1C35CA5 621D6329 F1C35CA5   59C9F2C9 CD04674F 5156BC75 E2D63100   *....1C......1C...I2I........SO..*
05DD60   492540BE 40000000 41100000 00000000   3944B82F A09B5A52 302F3942 19248446   *.. . ..........................*
05DD80   2814484B FEEBC2A1 1F8B6131 3BBABCF9   173BDCF4 95A97046 0F19B604 AAACA62B   *......B........9...4...........*
05DDA0   06B0AF48 EC79AD21 41100000 00000000   40199999 9999999A 3F28F5C2 8F5C28F6   *................ .........5B...6*
05DDC0   3E418937 4BC6A7F0 3D68DB8B AC710CB2   3C10C6F7 A0B5ED8D 3B1AD7F2 9ABCAF48   *.....F.O..........F7......P2....*
05DDE0   3A2AF31D C4611873 3944B82F A09B5A52   483B9ACA 00000000 475F5E10 00000000   *..3.D..........................*
05DE00   46989680 00000000 45186A00 00000000   44271000 00000000 433E8000 00000000   *...............................*
05DE20   42640000 00000000 3CA7C5AC 471B4784   45F42400 00000000 46000000 00000000   *...........E......4............*
05DE40   40000000 00000004 7FFFFFFF FFFFFFFF   000000F0 0000000F FFBAFFC4 FFCEFFD8   * ..................0.......D...Q*
05DE60   FFD8FFE2 FFECFFF6 00000009 0014001E   00280032 0C3C0046 C0000001 00020003   *.Q.S...6.......................*
05DE80   00040005 00070008 0009FFF7 FFF8FFF9   FFFAFFFC FFFDFFFE 0006FFFB D2002000   *...........7.8.9............K...*
05DEA0   3000D200 30002000 0005C8F0 0005B358   A04C5860 30205846 00001B22 8D200008   *..K.......H0...................*
05DEC0   88300008 12224780 82060620 41C90008   41100080 1C021AC1 950430C8 47808200   *.............I.........A........*
05DEE0   00000000 00FAFBFC FDFEFF00 0005D1DE   0005D5E8 0005D3A8 0005DA54 0005D5CA   *...............J...NY..L.......N.*
05DF00   0005D9EA D00C07FE 0006A3A0 00480A0A   058C4860 B08050E7 00309180 90064780   *..R...................X........*
05DF20   80189205 701047F0 801C9206 70104150   A05818C6 41D00020 1CCC1AD5 50D70014   *.......0...........F.......N.P..*
05DF40   184D9505 70104770 804048D0 900447F0   80581B22 8D200008 41100001 19128C20   *......... .....0...............*
05DF60   00084780 809648D7 0C224820 B07A4BD0   B0864740 807A1BCC 4810B07E 1DC11AD2   *.......P........... .........A.K*
05DF80   89D00008 41DCD001 47F0808A 4AD0B086   4AD0B084 06208920 004B0013 C01C0000   *..........0....................*
05DFAC   89000008 47F0809E 58103020 58010004   4110B034 5007C034 0FFFFFFF 0000000A   *.....0........................*
05DFC0   40404040 D2C03000 90000000 F0F1F2F3   F4F5F6F7 F8F9C1C2 C3C4C5C6 40F04BF0   *    K.......0123456789ABCDEF 0.0*
05DFE0   0005E018 0005DFF4 0005DFF0 00000000   00000000 00000000 000158B0 0005D19E   *.......4...0..................J.*
05E000   4040C4C5 C3C9D4C1 D34040C8 C5E7C1C4   C5C3C9D4 C1D30000 00000031 C9C8C3F2   *  DECIMAL  HEXADECIMAL......IHC2*
05E020   40F5C940 C3D6D5E5 C5D9E340 6C40C9D3   D3C5C7C1 D3404040 40404040 40404040   * 5I CONVERT . ILLEGAL          *
05E040   4040C3C8 C1D9C1C3 E3C5D940 40000010   50E0F354 5010F360 903DF3E4 D20BF3D8   *  CHARACTER  .....3...3...3UK.3Q*
05E060   1014D207 F410100C 5880F3BC 1891484C   100691C0 10084780 F0D44B40 F3A08B40   *..K.4.....3.... ........0M. 3.. *
05E080   00024780 F04A4940 F07847A0 F31C58A0   F3C091FF A0004710 F14247F4 F050C23C   *....0.. 0...3...3.......1..40.B.*
05E0A0   47F0F322 47F0F31C 47F0F202 47F0F0AE   47F0F202 47F0F0AE 47F0F07A 47F0F094   *.03..03..02..00..02..00..00..00.*
05E0C0   47F0F202 47F0F0AE 002892FF 804896F0   807A92CF F49792F7 F4A1D20B F4BFF438   *.02..00........0....4..74.K.4.4.*
05E0E0   47F0F142 920F8048 92D0F497 92F8F4A1   D20BF4BF F444960F 807A47F0 F14292FF   *.01.......4..84.K.4.4......01...*
05E100   804992D1 F49792F9 F4A1D20B F4BFF450   950F1007 4770F0CC 47F0F142 9400F3BB   *...J4..94.K.4.4.......0..01...3.*
05E120   47F0F202 58A0F3C0 91FFA000 4710F31C   92D2F497 D201F4A0 F510D20B F4BFF45E   *.02...3.......3..K4.K.4.5.K.4.4.*
05E140   89400014 5040F3B8 89400001 12444720   F0F88940 C0011244 4780F112 D20BF4BF   *. ... 3.. ......08. ......1.K.4.*
05E160   F45C9144 F3B847A0 F11E92FF 80499110   F3B84780 F12E920F 8048960F 807A9120   *4...3...1.......3...1..........*
05E180   F3B847E0 F20292FF 804896F0 807A47F0   F202950C 10074770 F1524170 000147F0   *3...2......0...02.......1......0*
05E1A0   F1564170 00095860 100896FF F3BB1B55   1BBB4120 00021F62 126647B0 F1701F62   *1.............3...............1...*
05E1C0   95446000 4770F1CC 1B554110 F3D84840   60028C40 00104340 60018D40 001041B0   *......1.....3Q. ... ... ... ....*
05E1E0   003C4130 0FFF1434 88400006 41000002   88400004 182B1424 4780F1B0 4400F3B4   *......... ....... ........1...3.*
05E200   460CF1A0 88400004 1863182B 14244780   F1C64352 10034300 60011650 41000003   *..1.. ..........1F.............*
05E220   96FFF3BA 91106000 4710F1E4 9400F3BA   41000007 413000F0 1A7012BB 4770F1F4   *..3.......1U..3........0......14*
05E240   435C6001 14534450 F39291FF A0004710   F2885820 F3BC41D0 20C45830 F40C5830   *........3.......2...3....D..4...*
05E260   30045030 D0045840 F3C85810 405C4130   F4D65820 F3604120 20040501 08125810   *....... 3H.. ...4D..3..........*
05E280   405C4130 F4FE4120 F3D00501 08124110   F478D200 F493F3D0 947FF493 184F180E   * ...4...3.......4.K.4.3...4.....*
05E2A0   95FF43BB 4780427E 41F0004C 50F04498   92804480 58F04434 05EF9200 448041F0   *.........0...0.......0.........0*
05E2C0   0C7450F0 449892F0 44A047F0 428458F0   443405EF 18F418E0 95FFF3BB 4770F31C   *...0...0...0...0.....4....3...3.*
05E2E0   9501F48F 4770F2DC 4270F3B8 9407F3B8   4370F3B8 4457F3A6 910A6000 47E0F31C   *..4...2...3...3...3...3.......3.*
05E300   94CF9008 9180F3D0 4780F2C4 96109008   47F0F31C 18458840 00041654 4457F3AE   *......3...2D.....03.... ......3.*
05E320   4780F31C 96209008 47F0F31C 950F9007   4780F31C 950D9007 4780F2F0 4457F392   *..3......03.......3.......20..3.*
05E340   18458840 00041654 950D9007 4770F310   4457F392 910A6000 47E0F310 94CF9008   *... ..........3...3.......3.....*
05E360   9180F3D0 4780F31C 4450F3A4 983DF3E4   07FE9500 F36C4780 F36ED201 F4A0F510   *..3...3...3...3U....3...3.K.4.5.*
05E380   92D2F497 D20BF4BF F46A9400 F3BB5820   F3C44110 F35498EF F34C07FE 600194EF   *.K4.K.4.4...3...3D..3...3......*
05E3A0   0005E428 60034780 0005E050 0000F202   58E01008 0005F888 0005DEEB 0000182F   *..U...........2.......8........*
```

```
05E3C0  4100F378 47F0F380 C9C8C3C1 C4D1E2E3  1B110A08 18F29201 F36C5000 F34C47F0  *..3..03.IHCADJST.....2..3...3..0*
05E3E0  F32A6000 F3D07800 F4186800 F4183B00  00062B00 31006800 F3D07800 F3D02200  *3...3...4...4..........3...3...*
05E400  00003200 5E321000 58F10008 0005B358  0005C276 0005E568 0005CEB0 18189220  *.........1........B...V.........*
05E420  10055071 000858F1 000858F0 F03005EF  07FA9108 60014780 C41A5820 60049104  *.......1...00...........D.......*
05E440  60024780 C4049501 70144780 C4044540  C3961825 1B339140 70244780 C4124130  *....D.......D.. C...... ....D...*
05E460  00049023 600C9708 7FFFFFFF FFFFFFFF  04000000 F0C9C8C3 F2F1F0C9 40D7D9D6  *....................0IHC210I PRO*
05E480  C7D9C1D4 0005C8F0 4040D6E5 C5D9C6D3  D6E64040 40E4D5C4 C5D9C6D3 D6E64040  *GRAM..H0  OVERFLOW   UNDERFLOW  *
05E4A0  C4C9E5C9 C4C540C3 C8C5C3D2 D44BC9D4  D7D9C5C3 C9E2C540 404040C1 D3C9C7D5  *DIVIDE CHECKM.IMPRECISE    ALIGN*
05E4C0  D4C5D5E3 40400000 0005E4E8 0005E4DC  0005E4E4 0005E42C 8005E4E0 00000000  *MENT  ....UY..U...UU..U...U.....*
05E4E0  00000000 00000000 00000074 C9C8C3F2  F040C940 C9C2C3D6 D4406040 D7D9D6C7  *............IHC20 I IBCOM . PROG*
05E500  D9C1D440 C9D5E3C5 D9D9E4D7 E3604040  40404040 40404040 40404040 D6D3C440  *RAM INTERRUPT.                OLD *
05E520  D7E2E640 C9E24040 40404040 40404040  40404040 40404040 404B40D9 C5C7C9E2  *PSW IS                    . REGIS*
05E540  E3C5D940 C3D6D5E3 C1C9D5C5 C4404040  40404040 40404040 40404040 40404040  *TER CONTAINED                    *
05E560  F1F0C34A 47000000 071047F0 10220710  58101F4E 90ECD00C 41B01118 50B0D008  *10C........0.....................*
05E580  18BD9201 108647F0 102E50D0 10B090EC  10B841B0 10AC50B0 111C98BD 1F501840  *.......0........................ *
05E5A0  D200C080 40001BAA 43A40000 8BA00002  47FAC04C 47F0C200 47F0C244 47F0C4CC  *K... ................CB..0B..0D.*
05E5C0  47F0CA16 47F0CD4C 00000000 00000000  00000000 00000000 40004780 91560011  *.0...0................. .......*
05E5E0  00040010 00000100 00000008 08000000  00000000 0010B000 000AD401 00000000  *........................M.....*
05E600  00000000 00000000 00000001 46D09138  41F096E4 00000000 00000000 0005E680  *.................0.U..........W.*
05E620  00000000 00000000 00000000 00000000  00000000 00000000 00000000 00000000  *................................*
05E640  00000000 00000000 00000000 00000000  00000000 00000000 00000000 00000000  *................................*
05E660  00000000 00000000 00000000 00000000  00000000 00000000 00000000 00000000  *................................*
05E680  00000000 0005E614 00000000 00000000  00000000 00000000 00000000 00000000  *......W.........................*
05E6A0  00000000 00000000 00000000 00000000  00000000 00000000 00000000 00000000  *................................*
05E6C0  00000000 00000000 0005C8F0 0005F510  0005E748 0005E730 8005E74C 0005F568  *..........H0..5...X...X...X...5.*
05E6E0  0005E748 0005E734 8005E74C 00000000  0005E748 0005E738 0005E74C 80000000  *..X...X...X.......X...X...X.....*
05E700  0005F684 0005E748 0005E73C 8005E74C  0005F598 0005E748 0005E740 8005E74C  *..6...X...X...X...5...X...X ..X.*
05E720  0005F5D4 0005E748 0005E744 8005E74C  000000D6 000000D9 000000DA 000000DB  *..5M..X...X...X....O...R........*
05E740  000000DC 000000E7 00000000 00000000  00000000 006C8000 00000000 0005F628  *.......X......................6.*
05E760  0005F638 00000000 45A0C60E 47F0C230  4110C1B8 45A0CE34 58D0D004 98ECD00C  *..6.......F..0B...A............*
05E780  95011086 47801224 58D0D004 92001086  1B331810 47F01002 91106002 4710C23C  *......................0........B.*
05E7A0  45A0CDC8 910FC085 4710C3F8 9868C094  910F6000 47E0C260 45A0C338 45A0C2FA  *..........C8..........B...C...B.*
05E7C0  47000000 47F0C944 91086001 4710C2AA  4590C3BA 41245000 91407024 4710C292  *.....0I.......B...C...... ....B.*
05E7E0  48307052 1A535050 60104950 80064740  C28E9608 600147F0 CEF4D201 C0702000  *............... B......0.4K.....*
05E800  4830C070 1A534B30 C0784A20 C07847F0  C27E9501 70144770 C2BA9110 60014710  *................0B.......B.......*
05E820  C2C245A0 C37E45A0 C33845A0 C2FA47F0  CEB25820 800C9102 60014710 C2F24830  *BB..C...C...B..0............B2..*
05E840  703E5850 80104B35 000E9106 60014780  CEF44030 800647F0 C2684830 200047F0  *.................4 ....CB......0*
05E860  C2E29680 600194EF 60019500 80174780  A0049200 80171818 58E01008 58F0E034  *BS.........................0..*
05E880  05EF9102 60024710 C938D200 C0826001  943F6001 91C0C082 4710CE92 47FA0004  *........I.K....................*
05E8A0  95017014 078A4540 C3665080 60149501  C0864770 C358D503 C0A0C094 4770C35C  *....... C...........C.N.......C.*
05E8C0  5080C09C 5080C0A8 97206001 07FA5850  60084180 60349120 60010714 58506004  *................................*
05E8E0  4180601C 07F49201 80179280 80041818  92801005 50710008 58F10008 58F0F030  *.....4.....................1...00.*
05E900  05EF07FA 92018017 92008004 18189220  10055071 000858F1 000858F0 F03005EF  *.....................1...00...*
05E920  07FA9108 60014780 C3F25820 60049501  70144780 C3DC4540 C3665750 60185880  *........C2..........C.. C.......*
05E940  60141825 1B339140 70244780 C3EA4130  00049023 600C9708 60019845 600C07F9  *....................C...................9*
05E960  910F6000 4710C424 95017014 4780C944  45A0C338 45A0C2FE 47F0C41C 45A0CC44  *.....D.......I...C...B..0D.....*
05E980  47F0C944 45A0CD08 47F0C938 91086001  4710C4BA 4590C3BA 48307052 41245000  *.0I......0I.......D...C.........*
05E9A0  91C07024 4710CEF4 91407024 4780CEF4  91F0C085 4710C468 4830703E 1B354B30  *.....4. .....4.0....D.........*
05E9C0  C078D201 2002C088 41202004 47F0CEF4  4800703E 1B0591F0 C0904710 C4B04930  *..K..........0.4.......0....D...*
05E9E0  C08E4780 C4A01903 47B0C456 4950C078  4780C4B4 1A054B00 C0781903 47B0C582  *....D.....D.......D...........E.*
05EA00  96F0C090 47F0C582 4950C078 4780C4B4  96F0C090 47F0C582 97F0CC90 183047F0  *.0...0E.......D..0...0E..0.....0*
05EA20  C4564540 C3665750 60181825 4830703E  47F0CEF4 4020C074 9501C086 4780C50E  *D.. C...........0.4 .........E.*
05EA40  9868C094 91066001 4780C592 9845600C  4800703E 91407024 4710C516 48307052  *.........E......... ....E.....*
05EA60  1A531BC5 19034740 C58E4124 50005050  601047F0 CEF49868 C0A047F0 C4DC1222  *....... E..........0.4.....0D...*
05EA80  41220004 4770C52C 91067024 4780C52C  41220002 41A45000 4020C070 D201A000  *......E.......E......... ...K...*
05EAA0  C0701A52 41245000 50506010 91046001  4780C57A 91F0C085 4710C568 1B054B00  *..................E..0....E.....*
05EAC0  C0784900 C08C4740 C57A1830 47F0C45A  1BC54900 70524740 C57A4830 705247F0  *....... E....0D........ E......0*
05EAE0  C4569140 70244780 C58E5850 60108950  00105054 00009608 6001D501 C074C076  *D.. ....E.................N.....*
05EB00  4720C5A0 9212C075 D2018006 C07445A0  C39C45A0 C33845A0 C2FA4700 00004540  *..E.....K.......C...C...B..... *
05EB20  C5C69106 60014780 CEF447F0 C42C91F0  C0850784 5890800C 92409000 4830703E  *EF.......4.0D..0......... ......*
```

```
05EB40   06300630 4430C608 1B225D20 C07C1233   4780C5FE 41929001 D2FF9001 90004199   *......F...........E.....K.......*
05EB60   01004630 C5F05820 800C4830 703E07F4   D2009001 9000D200 C0854001 D200C081   *....E0.........4K.....K... .K...*
05EB80   20009101 C0814780 C6265822 00005822   00009104 C0814780 C6364322 B0044152   *........F...............F.......*
05EBA0   00004020 B0009501 C0864780 C6565050   C1E458F0 CF5C5050 F03C47F0 C65A5050   *.. .........F...AU.0....0..0F...*
05EBC0   C1E81225 47D0C66E 06208B20 00044920   B0024740 C67A4110 C1A841A0 C21047F0   *AY....F........... F...A...B..0*
05EBE0   CE344122 B0089101 200F4710 C68A47FA   00049101 20034780 C6C24100 00A44510   *............F...........FB......*
05EC00   C69A0A0A 50120000 18619200 6000D262   60016000 D247605C CF604170 604C5070   *F.............K.....K...........*
05EC20   6024418C 601C5080 60145862 00005870   60245880 60149501 C0864770 C6DE9068   *.............................F...*
05EC40   C0A047F0 C6E29068 C0949500 C0804770   C6F6910F C0854710 C70A47F0 C7069503   *...0FS.........F6......G..0G...*
05EC60   C0804770 C7069500 C0854780 C70A94FD   600391C0 600247C0 C71A9140 60034780   *....G.......G..........G.. ....*
05EC80   C8A89108 60024710 C7329103 C0804780   C7329102 C0854780 CA1E9120 60024710   *H.......G.......G...............*
05ECA0   C7484590 C898D201 702AC06E 47F0C8C6   91086002 4780C7A2 91406003 4710C7AC   *G...H.K......0HF......G.. ....G.*
05ECC0   96406002 9503C080 4770C76E 9501C085   4740CC38 078A0700 4510C778 00000000   *. ........G...... ........G.....*
05ECE0   5071000C 92B01000 0A14943F 6002F212   C066702D 4F50C060 41550001 4590C898   *...............2................H.*
05ED00   D202702D C06D47F0 C8C6D202 702DCF7D   47F0C8C6 9503C080 4770C7C6 9500C085   *K......0HFK......0HF......GF....*
05ED20   4770C7C6 91046001 071A47F0 C87094BF   60039104 60014780 C86495C0 C0804770   *..GF.......0H...........H.......*
05ED40   C864910F C0854710 C7F29180 60034710   C85294F7 600147F0 C2689102 60034780   *H.......G2......H..7...0B.......*
05ED60   C802947D 600347F0 C87091F0 C0854780   C8225890 800C5A90 60109240 90004830   *H......0H..0....H........... ....*
05ED80   703E5B30 60104540 C5D89180 60034710   C84E9501 70144780 C84E9610 600345A0   *....... EQ......H.......H.......*
05EDA0   C33845A0 C2FA47F0 C84A94EF 600345A0   CC4445A0 C33845A0 CC44947F 60039420   *C...B..0H..........C.........*
05EDC0   60019103 C080071A 47F0C948 947F6003   91046001 4710C852 91106002 4780C882   *.........0I...........H.......H.*
05EDE0   9103C080 071A47F0 C94450A0 C07045A0   CD0858A0 C0709103 C080071A 47F0C938   *.......0I.....................0I.*
05EE00   4E50C060 F373C068 C06496F0 C06F07F9   91026C01 071A91F0 C085071A 9103C08C   *....3......0...9.......0........*
05EE20   071A4110 C16441A0 C21047F0 CE349200   C0879103 C0804710 C8F2910F C0854710   *....A...B..0............H2......*
05EE40   C8F20700 4510C8E4 00000000 50710000   92831000 0A1347F0 C9060700 4510C8FC   *H2....HU..............0I.....H.*
05EE60   0000000C 50710000 92871000 0A1395FF   C0874780 C2109110 70304710 C9385050   *.....................B.......I...*
05EE80   C1FC5850 C1F407F5 4110C198 58A01000   D207A028 702841A0 C21047F0 CE604140   *A...A4.5..A.....K.......B..0... *
05EEA0   92FC6002 92006003 4540C9E6 92086001   D2006000 C08591C0 70244710 C9829140   *......... IW....K...........I.. *
05EEC0   70244780 C9629602 60019110 70244780   C9829604 60019108 60014710 C982910F   *....I...........I...........I...*
05EEE0   60004710 C42C47F0 C9C69103 C0804710   CA264180 601C5080 60149501 C0864780   *....D..0IF.....................*
05EF00   C99E5080 C09C9200 60339200 604B9501   70144780 C9B2962C 60019103 C0804710   *I.....................I...........*
05EF20   CABC910F C0854710 C9D645A0 C37E9501   70144780 C2C245A0 C33847F0 C2BA4540   *........IO..C.......BB..C..0B.. *
05EF40   C5C69106 60014780 CEF447F0 C42C5850   70145895 000C5090 6C045090 602895C1   *EF.......4.0D..................*
05EF60   70140784 4A950006 50906008 50906040   D2036018 6004D703 60186008 07F445A0   *............... K......P......4..*
05EF80   C60E47F0 CA264120 00F047F0 CEF49501   C0854720 CC864780 CC4A9104 60014710   *F..0.....0.0.4.................*
05EFA0   CA9A9180 60034710 CA729610 600345A0   C33845A0 C2FE47F0 CA7294EF 6003910F   *................C...B..0........*
05EFC0   60004780 CA664590 CCAA47F0 CA729501   70144780 CA7245A0 CC4445A0 CC4491F0   *...........0...................0*
05EFE0   60004710 CA924590 CC2A5820 800C9102   20064710 CA6E45A0 CC4496C0 600347F0   *.................................0*
05F000   CEF49102 60034780 CADC94FD 60039110   60024710 CABC45A0 CD08D203 600C6004   *.4.........................K.....*
05F020   47F0C98A 4590CC26 96C06003 4820703E   58A08010 4B2A000E 91026001 4710CBB8   *.0I...........................*
05F040   47F0CB5A 91026001 4710CB66 1B225920   60104770 CB42910F 60004780 CB129140   *.0............................ *
05F060   60034710 CB0A4590 CCAA47F0 CAB245A0   C3384590 CC2247F0 CAC09180 60034710   *...........0....C.......0........*
05F080   CB0A9501 70144780 CB0A9610 600345A0   C33845A0 C2FA47F0 CB0694EF 600345A0   *................C...B..0........*
05F0A0   C338419C CAC047F0 CC1E9140 60034710   CB56910F 60004710 CAFE9640 60035820   *C......0... ............... ....*
05F0C0   60104B2C 70525020 601047F0 CEF44120   00045920 60104770 CB86910F 60004780   *...........0.4................*
05F0E0   CBA4914C 60034710 CBA447F0 CAFED201   CC406012 91406003 4710CBA0 910F6000   *... .......0..K.. ... ..........*
05F100   4710CAFE 96406003 45A0CBCA 91806003   4710CB0A 910F6000 4780CB1A 47F0CB0A   *..... .......................0..*
05F120   5840600C D201CC40 400045A0 CBCA47F0   CB0A1B22 4020CC42 41200004 50206010   *. ..K..  ......0.... ..........*
05F140   5A20600C 91022002 4710CBEA D201CC42   6012D201 60482000 58206048 89200001   *..............K.....K..........*
05F160   88200011 5A206010 50206010 4920CC40   4770CBD8 1B224920 CC42078A D2016012   *............... ...Q........K...*
05F180   CC4247F0 CEF445A0 CC4445A0 CC4445A0   CC4445A0 C37E45A0 C2FA47C0 000007F9   *...0.4.............C...B......9*
05F1A0   96C26003 47F0CEF4 D503C020 18170A45   07FA45A0 CDCA45A0 C338910F 60004780   *.B...0.4N.............C.......*
05F1C0   CC5E968C 600145A0 C2FE4700 00000700   4510CCC0 00000000 50710000 92901000   *........B......................*
05F1E0   0A149437 60024590 CCD047F0 CEF445A0   CDCA45A0 C33845A0 C2FA47F0 CC9E9680   *............0.4......C...B..0....*
05F200   70304590 CCAA94BF 60024590 CCD047F0   CEF445A0 CDCA45A0 C33845A0 C2FA4700   *...............0.4......C...B...*
05F220   00000700 4510CCC4 00000000 50710000   92B01000 0A1707F9 91106002 07891817   *.......D...............9........*
05F240   58F10014 96011017 48EF0004 4CEF0006   91011020 4710CCF8 410E0008 47F0CCFC   *.1.....................8.....0..*
05F260   410E0010 411F0000 0A0A94EF 600207F9   1B004300 70148900 00104A00 703E1817   *...............9...............*
05F280   40001018 88000010 40001016 41000000   13110700 45F0CD40 0005F2A0 00000000   * ....... ............0. ..2.....*
05F2A0   C9C5C3D8 C2C6C7F1 0A064540 C9E69610   600207FA 4120B008 41400010 4850B002   *IECQBFG1... IW........... .....*
```

```
05F2C0  4155B000 91012003 4710CDC2 9101200F  4780CDC2 58620000 5050C070 58806014  *...........B.......B............*
05F2E0  58706024 91107030 4780CDAA 45A0CDCA  45A0C338 45A0C2FA 47000000 4510CD9C  *..................C...B........*
05F300  00000000 50710000 92801000 0A144590  CCD01816 410000A4 41110000 0A0A9601  *................................*
05F320  20035850 C0704140 00108724 CD5C47F0  CF08902A C0F4910F 6000078A 91046001  *....... ........0.....4........*
05F340  078A9108 6001071A 96086001 1B339140  70244780 CDF24B30 C0785A30 601047C0  *............... .....2........*
05F360  CE2E4890 703E9140 70244710 CE0E4030  703E47F0 CE1A9845 6C0C8950 00105054  *....... ...... ....0...........*
05F380  000045A0 C39C4090 703E45A0 C33845A0  C2FA4700 0000982A C0F407FA 18E15830  *....C. .....C...B........4......*
05F3A0  100058F0 3000413F 300058F0 CF5C4120  C1E49501 C0864770 CE564120 C1E84400  *...0.......0....AU.........AY..*
05F3C0  F0520501 0404181E 58F0CF5C 58D0F0B8  D20FD00C F07C50D0 F0C841D0 F0C45830  *0........0....0.K...0...0H..0D..*
05F3E0  C11C4300 C08558F0 C16005EF 4200C085  41D0C118 5030C11C 07FAD500 B001B004  *A......0A.........A...A...N.....*
05F400  4780CEA8 4110C184 45A0CE60 47F0C210  5050C1FC 5850C1F8 07F55830 CF5C5820  *......A......0B...A...A8.5......*
05F420  310C4120 20001222 4780CED4 92FF307C  18E2980D 308458E0 E00007FE D200C085  *...........M.....S..........K...*
05F440  60004110 C17445A0 CE3458E0 C1E012EE  4770C210 4590CCD0 47F0C76E 58F0CF5C  *....A.......A.....B......0G..0..*
05F460  41202000 9501C086 4780CF2A 9023F114  58D0D004 98E1D00C 984CD024 95011086  *...............1...............*
05F480  47801F20 58D0D004 92001086 181047F0  10065920 F1144770 CF089200 F114D206  *...............0....1.......1.K.*
05F4A0  F115F114 47F0CF08 94BF6002 4590CCD0  58A0C0AC 07FA4780 0005FEB8 0005E568  *1.1..0........................V.*
05F4C0  0005E680 0005B358 00000000 00000001  00004000 00000001 0005F744 0005F6BC  *..W............... .......7...6.*
05F4E0  C6E3E7E7 C6F0F0F1 02002020 00000001  0005F6C4 00000000 00000000 00000001  *FTXXF001..........6D...........*
05F500  00000001 00000001 00000000 00000001  00000053 C9C8C3F2 F1F4C940 C6C9D6C3  *.....................IHC214I FIOC*
05F520  E2406040 E4D5C6D6 D9D4C1E3 E3C5C440  C961D66B 40D9C5C3 D6D9C440 C6D6D9D4  *S . UNFORMATTED I.O. RECORD FORM*
05F540  C1E340E2 D7C5C3C9 C6C9C5C4 40C1E240  C66B40E4 40D6D940 E540D6D5 40E4D5C9  *AT SPECIFIED AS F. U OR V ON UNI*
05F560  E3404040 40404000 0000002C C9C8C3F2  F1F7C940 C6C9D6C3 E2406040 C5D5C440  *T       .....IHC217I FIOCS . END *
05F580  D6C640C4 C1E3C140 E2C5E340 D6D540E4  D5C9E340 40404040 00000035 C9C8C3F2  *OF DATA SET ON UNIT      ....IHC2*
05F5A0  F2F0C940 C6C9D6C3 E2406040 E4D5C9E3  40D5E4D4 C2C5D940 D6E4E340 D6C640D9  *20I FIOCS . UNIT NUMBER OUT OF R*
05F5C0  C1D5C7C5 4B40E4D5 C9E3407E 40404040  40000000 00000050 C9C8C3F2 F3F1C940  *ANGE. UNIT .      .......IHC231I *
05F5E0  C6C9D6C3 E2406040 E2C5D8E4 C5D5E3C9  C1D340C9 61D640E2 E3C1E3C5 D4C5D5E3  *FIOCS . SEQUENTIAL I.O STATEMENT*
05F600  E240E4E2 C5C440C6 D6D940C4 C9D9C5C3  E340C1C3 C3C5E2E2 40C4C1E3 C140E2C5  *S USED FOR DIRECT ACCESS DATA SE*
05F620  E3404040 40404040 D500B001 B0044770  C92092FF C1F00550 9200C086 5810C160  *T       N.......I...A0........A.*
05F640  92FF1013 9500C1F0 4780502A D2075074  7028D203 504C5080 4110504C 0A2347F0  *......A0....K.....K...........0*
05F660  503C5810 C184D203 1000C1EC D203106C  507C0A23 5850C1FC 58F0CF5C 45E0F044  *....A.K...A.K.........A..0....0.*
05F680  00100000 0000002C C9C8C3F2 F1F9C940  C6C9D6C3 E2406040 D4C9E2E2 C9D5C740  *........IHC219I FIOCS . MISSING *
05F6A0  C4C440C3 C1D9C440 C6D6D940 40404040  40404040 02000020 003C8000 8505F764  *DD CARD FOR          ..........7.*
05F6C0  87000000 05509650 60019180 600107EE  184E5000 C1949280 C19441F0 F0000700  *....................A...A..00...*
05F6E0  56F05022 47F05026 02000000 0A4418A1  41000070 45105032 0A0A5010 C184D21A  *.0...0.....................A.K.*
05F700  10045062 D24C101F A03241A0 006850A0  100041F0 F0000700 56F0505A 47F0505E  *....K..............00....0...0..*
05F720  FF000000 0A4407F4 C9C8C3F2 F1F8C940  C6C9D6C3 E2406040 C961D640 C5D9D9D6  *.......4IHC218I FIOCS . I.O ERRO*
05F740  D9404000 50A0C0AC 4590CCBA 92006033  9200604B 91106003 4780CF40 94EF6003  *R  ......................... ....*
05F760  47F0CF48 05304150 308C91F0 C0850715  9103C080 07159500 70244770 301E9648  *.0.........0...................*
05F780  702407F5 91C07024 47103040 91487024  0715910F C0854710 30409140 70244780  *...5....... ............. . ....*
05F7A0  304047F0 30884590 30601211 47703082  91C07024 4710305A 91407024 47103088  *. .0...................... ......*
05F7C0  92487024 07F54110 C1641842 50E0C0AC  5030C070 45A0CE34 5830C070 58E0C0AC  *.....5..A......................*
05F7E0  18245810 C1E007F9 92FFC087 07F59608  70244120 20041B99 4990703E 477030A0  *....A..9.....5................*
05F800  D201703E 20029500 70244770 30AED200  70242004 95017014 478030BE 92027014  *K.............K................*
05F820  92027048 49907052 477030CC D2017052  200648A0 703E9180 70244710 30DC4BA0  *............K..................*
05F840  C0784990 70524780 310E91F0 C0854710  30F49148 70244710 3112D501 7052C08E  *............0.....4........N.....*
05F860  478031CE 91C07024 4710310E 49A07052  47B03112 40A07052 91806002 078E9602  *..................... ...........*
05F880  600207FE C9C5C6F2 00000073 40000000  0A050042 00000001 00050042 00000001  *....IEF2.... ..................*
05F8A0  0A050042 00000001 000A0042 00000001  0A050042 00000001 0A050052 00000001  *................................*
05F8C0  0A050042 00000001 0A050042 00000001  00050052 00000001 0A050042 00000001  *................................*
05F8E0  01010042 00000001 0A050052 00000001  0A050042 00000001 0A050042 00000001  *................................*
05F900  0A050052 00000001 0A050052 00000001  0A050052 00000001 0A050052 00000001  *................................*
05F920  0A050052 00000001 0A050042 00000001  0A050042 00000001 0A050042 00000001  *................................*
05F940  0A050042 00000001 01010002 00000001  0A050042 00000001 0A050042 00000001  *................................*
05F960  0A050042 00000001 0A050042 00000001  0A050042 00000001 0A050042 00000001  *................................*
05F980  0A050042 00000001 0A050042 00000001  0A050042 00000001 0A050040 00000001  *.............................. ....*
05F9A0  0A050042 00000001 0A050042 00000001  0A050042 00000001 0A050042 00000001  *................................*
05F9C0  0A050042 00000001 0A050042 00000001  0A050042 00000001 0A050042 00000001  *................................*
05F9E0  0A050042 00000001 0A050042 00000001  0A050042 00000001 0A050042 00000001  *................................*
05FA00  0A050042 00000001 0A050042 00000001  0A050042 00000001 0A050042 00000001  *................................*
05FA20  0A050042 00000001 0A050042 00000001  0A050042 00000001 0A050042 00000001  *................................*
```

```
05FA40   0A050042 00000001 0A050042 00000001   0A050042 00000001 0A050042 00000001  *................................*
05FA60   0A050042 00000001 0A050042 00000001   0A050042 00000001 0A050042 00000001  *................................*
05FA80   0A050042 00000001 0A050042 00000001   0A050042 00000001 0A050042 00000001  *................................*
05FAA0   0A050042 00000001 0A050042 00000001   0A050042 00000001 0A050042 00000001  *................................*
05FAC0   0A050042 00000001 0A050042 00000001   0A050042 00000001 0A050042 00000001  *................................*
05FAE0   0A050042 00000001 0A050042 00000001   0A050042 00000001 0A050042 00000001  *................................*
05FB00   0A050042 00000001 0A050042 00000001   0A050042 00000001 0A050042 00000001  *................................*
05FB20   0A050042 00000001 0A050042 00000001   0A050042 00000001 0A050042 00000001  *................................*
05FB40   0A050042 00000001 0A050042 00000001   0A050042 00000001 0A050042 00000001  *................................*
05FB60   0A050042 00000001 0A050042 00000001   0A050042 00000001 0A050042 00000001  *................................*
05FB80   0A050042 00000001 0A050042 00000001   0A050042 00000001 0A050042 00000001  *................................*
05FBA0   0A050042 00000001 0A050042 00000001   0A050042 00000001 0A050042 00000001  *................................*
05FBC0   0A050042 00000001 0A050042 00000001   0A050042 00000001 0A050042 00000001  *................................*
05FBE0   0A050042 00000001 0A050042 00000001   0A050042 00000001 0A050042 00000001  *................................*
05FC00   0A050042 00000001 0A050042 00000001   0A050042 00000001 0A050042 00000001  *................................*
05FC20   0A050042 00000001 92FFF1FC 41F0F008   47F0F00A 05E3D9C1 C3C590EC D00C5880  *..........1..00..00..TRACE......*
05FC40   F16C91FF F1F44710 F02E95FF 807C4780   F02E18F8 58E0F06C 980CD014 07FE50D0  *1...14..0.......0..8..0.........*
05FC60   F1B041D0 F1AC4120 F1785810 F1740501   00FF4700 000092F0 2000403C F250D24E  *1...1...1...1..........0.. .2.K.*
05FC80   2001F1FA 4570F152 589D0004 91FFF1F4   4780F068 58909004 41A00004 1BBB5859  *..1...1.......14..0............*
05FCA0   00101958 4780F138 1A5A9500 50004780   F0984365 00009508 500047D0 F0924160  *......1.........0...........0...*
05FCC0   0008C660 4460F280 5859000C D5015000   F24E4770 F0B84865 00024E60 F258F332  *......2.....N...2...0.......2.3.*
05FCE0   201FF25D 96F02022 41502025 41C00004   18354120 900C4570 F1441A9A 4150500B  *..2..0.................1.......*
05FD00   46C0F0C0 4B90F1F8 4570F152 D5039010   80C04780 F1064150 002C875A F0FC1BCC  *..0...18..1.N.......1.......0...*
05FD20   86CAF12A 599CF178 4770F0F0 D2132016   F26C4570 F152D20B 2001F274 4132000D  *..1...1...00K...2...1.K...2.....*
05FD40   41280000 4570F144 4570F152 58D0D004   9200F1F4 98ECD00C 07FE509B F17C5890  *......1...1.......14........1...*
05FD60   900418BC 47F0F06E 41600005 4150F248   47F0F092 5810F170 5811005C 0501040A  *.....00.......2..00...1........*
05FD80   07F74820 F2505810 F1740501 02004700   000092F0 20004030 F25007F7 0005B358  *.7..2...1..........0.. .2..7....*
05FDA0   0005CEB0 0005E56E 04000000 00000001   00000000 00000000 0000000C 00000000  *......V........................*
05FDC0   00000000 00000000 00000000 00000000   00000000 00000000 00000000 07FE18F8  *...............................8*
05FDE0   980CD014 45E0F044 00105098 F2145890   900418BC 47F0F0DE 41600005 4150F2A2  *......0.....2........00.......2.*
05FE00   47F0F102 5810F208 5811005C 0501040A   07F74820 F2AA581C F20C0501 02004700  *.01...2.........7..2...2.......*
05FE20   00C092F0 000000F0 0010E3D9 C1C3C5C2   C1C3D240 40D9D6E4 E3C9D5C5 4040C3C1  *...0...0..TRACEBACK  ROUTINE  CA*
05FE40   D3D3C5C4 40C6D9D6 D440C9E2 D5404040   D9C5C74B 4040F1F4 404040D9 C5C74B40  *LLED FROM ISN   REG.  14   REG. *
05FE60   40F1F540 4040D9C5 C74B4040 40F04040   40D9C5C7 4B404040 F1C9C2C3 D6D44700  * 15   REG.   0   REG.   1IBCOM..*
05FE80   0000C1C3 D24040D9 00000000 00000000   E3D9C1C3 C5C2C1C3 D240E3C5 D9D4C9D5  *..ACK  R........TRACEBACK TERMIN*
05FEA0   C1E3C5C4 C5D5E3D9 E840D7D6 C9D5E37E   D2002000 50014040 00000140 06050607  *ATEDENTRY POINT.K.....  ... ....*
05FEC0   00000001 70000320 C0028000 00000001   00000001 70000320 C0028000 00000001  *................................*
05FEE0   00000001 70000320 C0028000 00000001   00000001 70000320 C0028000 00000001  *................................*
05FF00   00000001 70000050 80020050 00000001   00000001 70000085 C4028000 00000001  *.......................D........*
05FF20   00000001 70000050 80020050 00000001   00000001 70000320 C0028000 00000001  *................................*
05FF40   00000001 70000320 C0028000 00000001   00000001 70000320 C0028000 00000001  *................................*
05FF60   00000001 70000320 C0028000 00000001   00000001 70000320 C0028000 00000001  *................................*
05FF80   00000001 70000320 C0028000 00000001   00000001 70000320 C0028000 00000001  *................................*
05FFA0   00000001 70000320 C0028000 00000001   00000001 70000320 C0028000 00000001  *................................*
05FFC0   00000001 70000320 C0028000 00000001   00000001 70000320 C0028000 00000001  *................................*
05FFE0   00000001 70000320 C0028000 00000001   00000001 70000320 C0028000 00000001  *................................*
```

```
PPPPPPPPPPP   PPPPPPPPPPP   DDDDDDDDD                  WW        WW  PPPPPPPPPPP     00000000     2222222222
PPPPPPPPPPPP  PPPPPPPPPPPP  DDDDDDDDDD                 WW        WW  PPPPPPPPPPPP   0000000000   222222222222
PP         PP PP         PP DD       DD                WW        WW  PP         PP 00        00 22         22
PP         PP PP         PP DD        DD               WW        WW  PP         PP 00        00            22
PP         PP PP         PP DD        DD               WW        WW  PP         PP 00        00            22
PPPPPPPPPPPP  PPPPPPPPPPPP  DD        DD                WW        WW  PPPPPPPPPPPP 00        00           22
PPPPPPPPPPP   PPPPPPPPPPP   DD        DD                WW   WW   WW  PPPPPPPPPPP  00        00         22
PP            PP            DD        DD                WW  WWWW  WW  PP           00        00       22
PP            PP            DD        DD                WW WW  WW WW  PP           00        00     22
PP            PP            DD       DD                 WWWW    WWWW  PP           00        00   22
PP            PP            DDDDDDDDDD                  WWW      WWW  PP             0000000000   222222222222
PP            PP            DDDDDDDDD                   WW        WW  PP              00000000    222222222222
```

```
 9999999999
99999999999
99        99
99        99
99        99
99999999999
99999999999
          99
          99
99        99
99999999999
 9999999999
```

```
LOC  OBJECT CODE    ADDR1 ADDR2  STMT   SOURCE STATEMENT                                    F08APR70   9/16/70

                                  2 ******** D E S C R I P T I O N   O F   P R O J E C T *************** 00000200
                                  3 *                                                                   * 00000300
                                  4 * O  THE OBJECTIVE  OF THIS PROJECT MAY BE FOUND IN THE LAB         * 00000400
                                  5 *    ACTIVITIES SECTION OF YOUR STUDENT GUIDE. (PPD WP02)           * 00000500
                                  6 *                                                                   * 00000600
                                  7 *                                                                   * 00000700
                                  8 * O  AN OVERALL DESCRIPTION OF A PROGRAMS LOGIC MAY BE OBTAINED     * 00000800
                                  9 *    THROUGH THE USE OF A FLOW CHART. THE VARIOUS SYMBOLS USED AND  * 00000900
                                 10 *    THEIR MEANING MAY BE FOUND IN THE "FLOW CHARTING TECHNIQUES"   * 00001000
                                 11 *    S.R.L.. THIS PROJECT WAS DESIGNED TO MAKE YOU MORE FAMILIAR WITH * 00001100
                                 12 *    THE WAY FLOW CHARTS ARE USED IN PROGRAMMING.                   * 00001200
                                 13 *                                                                   * 00001300
                                 14 * O THE ORDER OF THIS PROJECT IS AS FOLLOWS:                        * 00001400
                                 15 *                                    1. DESCRIPTION OF SORT ROUTINE. * 00001500
                                 16 *                                    2. QUESTIONS AND ANSWERS.       * 00001600
                                 17 *                                    3. FLOWCHART OF ROUTINE.        * 00001700
                                 18 *                                    4. ASSEMBLER LISTING OF ROUTINE * 00001800
                                 19 *                                    5. STORAGE DUMP.                * 00001900
                                 20 *                                                                   * 00002000
                                 21 * O ANSWER ALL QUESTIONS IN THE SPACE PROVIDED.                      * 00002100
                                 22 *                                                                   * 00002200
                                 23 *                                                                   * 00002300
                                 24 *---------------> D E S C R I P T I O N   O F   R O U T I N E <-------* 00002400
                                 25 *                                                                   * 00002500
                                 26 * O  THIS PROGRAM WILL SORT A LIST OF FULLWORD VALUES USING THE      * 00002600
                                 27 *   ALTERNATING EXCHANGE TECHNIQUE.                                 * 00002700
                                 28 *   ALTERNATING EXCHANGE IS SIMILAR TO THE STANDARD EXCHANGE TECHNIQUE* 00002800
                                 29 *   IN SO FAR AS THE MANNER OF COMPARING DATA ITEMS. HOWEVER, ONCE THE* 00002900
                                 30 *   UPPER END OF THE LIST HAS BEEN REACHED (AND THE LARGEST VALUE PUT * 00003000
                                 31 *   THERE), THE SORT BEGINS TO WORK BACKWARDS TOWARD THE LOW END OF  * 00003100
                                 32 *   THE LIST, PUSHING THE LOWEST VALUE TO THAT LOCATION. WHEN THIS   * 00003200
                                 33 *   HAS BEEN ACCOMPLISHED, IT BEGINS AGAIN TO SCAN TO THE BOTTOM, THEN* 00003300
                                 34 *   BACK TO THE TOP, ETC. ETC. ETC. EACH TIME A SCAN IS ENDED, THE   * 00003400
                                 35 *   NEW TOP OR BOTTOM IS ADJUSTED TO EXCLUDE THE LAST VALUE. WHEN THE * 00003500
                                 36 *   TOP AND BOTTOM LIMITS MEET AT THE MIDDLE OF THE LIST, THE SORT IS * 00003600
                                 37 *   ENDED.                                                          * 00003700
                                 38 *                                                                   * 00003800
                                 39 *                                                                   * 00003900
                                 40 *&&&&&&&&&&&&&&&&&&&&&&&&&&&&&&&&&&&&&&&&&&&&&&&&&&&&&&&&&&&&&&&&&&&* 00004000
                                 41 *  BEFORE SORT                 'L I S T' (AFTER SUCCESSFUL SORT)       * 00004100
                                 42 *  'CEILING' POINTS -1-->+-----------------+<---LOW END OF LIST      * 00004200
                                 43 *                        | LOWEST # HERE   |                         * 00004300
                                 44 *                        |        |        |                         * 00004400
                                 45 *                        |        |        |                         * 00004500
                                 46 *                        |        |        |                         * 00004600
                                 47 *                        |        |        |                         * 00004700
                                 48 *                        |        V        |                         * 00004800
                                 49 *  BEFORE SORT           | HIGHEST # HERE  |                         * 00004900
                                 50 *  'FLOOR' POINTS --64-->+-----------------+<----UPPER END OF LIST   * 00005000
                                 51 *                                                                   * 00005100
                                 52 *                "ITS GOING TO BE ONE OF THOSE DAYS"                 * 00005200
                                 53 *                                                                   * 00005300
                                 54 ********************************************************************** 00005400
```

```
LOC  OBJECT CODE    ADDR1 ADDR2  STMT   SOURCE STATEMENT                                    F08APR70   9/16/70

                                 178 *XXXXXXXXXXXXXXXXXXXXXXXX REFERENCE MATERIAL REQUIRED XXXXXXXXXXXXXXXX 00017800
                                 179 *X                                                                  X 00017900
                                 180 *X                 'FLOWCHARTING TECHNIQUES S.R.L.'                 X 00018000
                                 181 *X                    SECTION ON PROGRAM FLOWCHARTING.              X 00018100
                                 182 *X                                                                  X 00018200
                                 183 *XXXXXXXXXXXXXXXXXXXXXXXXXXXXXXXXXXXXXXXXXXXXXXXXXXXXXXXXXXXXXXXXXXXX 00018300


                                 185 *$$$$$$$$$$$$$$$$$$$$$$$$$$$$ QUESTION 16.1 $$$$$$$$$$$$$$$$$$$$$$$$$$$$ 00018500
                                 186 *$                                                                  $ 00018600
                                 187 *$       CHOOSE THE CORRECT STATEMENTS FROM THE FOLLOWING LIST.     $ 00018700
                                 188 *$       PROGRAM FLOWCHARTS PROVIDE:                                $ 00018800
                                 189 *$                                                                  $ 00018900
                                 190 *$                A. A GRAPHIC PICTURE OF THE PROBLEM SOLUTION.     $ 00019000
                                 191 *$                B. THE CONTENTS OF ANY BYTE IN STORAGE.           $ 00019100
                                 192 *$                C. DOCUMENTATION OF THE PROGRAM.                  $ 00019200
                                 193 *$                D. VERIFICATION THAT ALL POSSIBLE CONDITIONS HAVE $ 00019300
                                 194 *$                    BEEN TAKEN INTO CONSIDERATION.                 $ 00019400
                                 195 *$                E. A GRAPHIC REPRESENTATION OF THE PROGRAMS LOGIC. $ 00019500
                                 196 *$                F. AN INSTRUCTION BY INSTRUCTION LISTING OF THE   $ 00019600
                                 197 *$                    PROGRAM.                                       $ 00019700
                                 198 *$                                                                  $ 00019800
                                 199 *$$$$$$$$$$$$$$$$$$$$$$$$$$$$$$$$$$$$$$$$$$$$$$$$$$$$$$$$$$$$$$$$$$$$$$$ 00019900
```

```
LOC  OBJECT CODE    ADDR1 ADDR2  STMT   SOURCE STATEMENT                                  F08APR70   9/16/70

                                 202 *========================== ANSWER 16.1 ================================ 00020200
                                 203 *=                                                                    = 00020300
                                 204 *=       A....C....D....E ARE THE CORRECT STATEMENTS.                 = 00020400
                                 205 *=                                                                    = 00020500
                                 206 *===================================================================== 00020600


                                 208 *$$$$$$$$$$$$$$$$$$$$$$$$$$ QUESTION 16.2 $$$$$$$$$$$$$$$$$$$$$$$$$$$$$$ 00020800
                                 209 *$                                                                    $ 00020900
                                 210 *$                                                                    $ 00021000
                                 211 *$      THE FIVE BASIC FUNCTIONS THAT CAN BE DEPICTED ON FLOWCHARTS   $ 00021100
                                 212 *$       ARE:                                                         $ 00021200
                                 213 *$                            1. ________________                     $ 00021300
                                 214 *$                            2. ________________                     $ 00021400
                                 215 *$                            3. ________________                     $ 00021500
                                 216 *$                            4. ________________                     $ 00021600
                                 217 *$                            5. ________________                     $ 00021700
                                 218 *$                                                                    $ 00021800
                                 219 *$$$$$$$$$$$$$$$$$$$$$$$$$$$$$$$$$$$$$$$$$$$$$$$$$$$$$$$$$$$$$$$$$$$$$$$$ 00021900
```

```
LOC  OBJECT CODE    ADDR1 ADDR2  STMT   SOURCE STATEMENT                                F08APR70   9/16/70


                                 222 *======================== ANSWER 16.2 ================================ 00022200
                                 223 *=                                                                    = 00022300
                                 224 *=                           1. PROCESS                               = 00022400
                                 225 *=                           2. INPUT/OUTPUT                          = 00022500
                                 226 *=                           3. FLOW OR SEQUENCE                      = 00022600
                                 227 *=                           4. CONNECTION                            = 00022700
                                 228 *=                           5. ANNOTATION: ADDITION OF NOTES.        = 00022800
                                 229 *=                                                                    = 00022900
                                 230 *===================================================================== 00023000




                                 232 *$$$$$$$$$$$$$$$$$$$$$$$$$$ QUESTION 16.2 $$$$$$$$$$$$$$$$$$$$$$$$$$$$$$$$$ 00023200
                                 233 *$                                                                    $ 00023300
                                 234 *$      A 'PROCESS' BLOCK IS LOCATED ON THE FLOWCHART OF THE ROUTINE   $ 00023400
                                 235 *$       AT:                                                          $ 00023500
                                 236 *$                                                                    $ 00023600
                                 237 *$                            A. D4                                   $ 00023700
                                 238 *$                            B. D2                                   $ 00023800
                                 239 *$                            C. D3                                   $ 00023900
                                 240 *$                            D. C4                                   $ 00024000
                                 241 *$                                      THE ANSWER IS_______.         $ 00024100
                                 242 *$                                                                    $ 00024200
                                 243 *$$$$$$$$$$$$$$$$$$$$$$$$$$$$$$$$$$$$$$$$$$$$$$$$$$$$$$$$$$$$$$$$$$$$$$ 00024300
```

```
*========================= ANSWER 16.2 ============================== 00024600
*=                                                                  = 00024700
*=                      *****D4*********                            = 00024800
*=                      *              *                            = 00024900
*=                      *              *                            = 00025000
*=      THE ANSWER IS....*      'A'     * ......                    = 00025100
*=                      *              *                            = 00025200
*=                      *              *                            = 00025300
*=                      ****************                            = 00025400
*=                                                                  = 00025500
*=                                                                  = 00025600
*=                                                                  = 00025700
*=                                                                  = 00025800
*=================================================================== 00025900
```

```
*$$$$$$$$$$$$$$$$$$$$$$$$$$ QUESTION 16.4 $$$$$$$$$$$$$$$$$$$$$$$$$$$$$$ 00026100
*$                                                                   $ 00026200
*$    A 'DESCISION' BLOCK MAY BE FOUND ON THE FLOWCHART AT:          $ 00026300
*$                                                                   $ 00026400
*$                            A. D3                                  $ 00026500
*$                            B. B4                                  $ 00026600
*$                            C. D2                                  $ 00026700
*$                            D. D5                                  $ 00026800
*$                                                                   $ 00026900
*$                                   THE ANSWER IS_______            $ 00027000
*$                                                                   $ 00027100
*$$$$$$$$$$$$$$$$$$$$$$$$$$$$$$$$$$$$$$$$$$$$$$$$$$$$$$$$$$$$$$$$$$$$$$$ 00027200
```

```
LOC  OBJECT CODE    ADDR1 ADDR2  STMT   SOURCE STATEMENT                                   F08APR70   9/16/70


                                 275 *========================= ANSWER 16.4 ================================ 00027500
                                 276 *=                                                                    = 00027600
                                 277 *=                                 .*.                                = 00027700
                                 278 *=                              D2   *.                               = 00027800
                                 279 *=                            .*       *.                             = 00027900
                                 280 *=                          .*           *.                           = 00028000
                                 281 *=      THE ANSWER IS..... *.     'C'     .* ........               = 00028100
                                 282 *=                          *.         .*                             = 00028200
                                 283 *=                            *.     .*                               = 00028300
                                 284 *=                              *. .*                                 = 00028400
                                 285 *=                                *                                   = 00028500
                                 286 *===================================================================== 00028600


                                 288 *$$$$$$$$$$$$$$$$$$$$$$$$$$ QUESTION 16.5 $$$$$$$$$$$$$$$$$$$$$$$$$$$$$$ 00028800
                                 289 *$                                                                    $ 00028900
                                 290 *$   T R U E / F A L S E                                              $ 00029000
                                 291 *$                                                                    $ 00029100
                                 292 *$       THE BLOCK AT LOCATION 'D1' IN THE FLOWCHART IS A             $ 00029200
                                 293 *$        PREPARATION BLOCK.                                          $ 00029300
                                 294 *$                                                                    $ 00029400
                                 295 *$$$$$$$$$$$$$$$$$$$$$$$$$$$$$$$$$$$$$$$$$$$$$$$$$$$$$$$$$$$$$$$$$$$$$$$ 00029500
```

```
LOC  OBJECT CODE    ADDR1 ADDR2  STMT   SOURCE STATEMENT                                    F08APR70   9/16/70

                                 298 *========================= ANSWER 16.5 ================================ 00029800
                                 299 *=                                                                    = 00029900
                                 300 *=            RIGHTO....... IT IS VERY TRUE.                          = 00030000
                                 301 *=                                                                    = 00030100
                                 302 *===================================================================== 00030200


                                 304 *$$$$$$$$$$$$$$$$$$$$$$$$$ QUESTION 16.6 $$$$$$$$$$$$$$$$$$$$$$$$$$$$$$$$$ 00030400
                                 305 *$                                                                    $ 00030500
                                 306 *$      THE SYMBOL HANGING OFF THE 'YES' LEG OF THE DECISION BLOCK    $ 00030600
                                 307 *$       AT LOCATION 'A2' IS:                                         $ 00030700
                                 308 *$                              A. AN OFFPAGE CONNECTOR.              $ 00030800
                                 309 *$                              B. AN INPUT/OUTPUT BLOCK.             $ 00030900
                                 310 *$                              C. AN ONPAGE CONNECTOR.               $ 00031000
                                 311 *$                              D. A PROCESS BLOCK.                   $ 00031100
                                 312 *$                                                 THE ANSWER IS___ $ 00031200
                                 313 *$$$$$$$$$$$$$$$$$$$
```

```
LOC  OBJECT CODE    ADDR1 ADDR2  STMT   SOURCE STATEMENT                                   F08APR70   9/16/70

                                 316 *========================= ANSWER 16.6 ================================= 00031600
                                 317 *=                                                                    = 00031700
                                 318 *=                          ***                                       = 00031800
                                 319 *=                         *   *                                      = 00031900
                                 320 *=      THE ANSWER IS.... *'C'*                                       = 00032000
                                 321 *=                         *   *                                      = 00032100
                                 322 *=                          ***                                       = 00032200
                                 323 *=                                                                    = 00032300
                                 324 *======================================================================= 00032400


                                 326 *$$$$$$$$$$$$$$$$$$$$$$$$$$ QUESTION 16.7 $$$$$$$$$$$$$$$$$$$$$$$$$$$$$$ 00032600
                                 327 *$                                                                    $ 00032700
                                 328 *$       THE LOGICAL FLOW WITHIN THE FLOWCHART BEGINS AT THE BLOCK    $ 00032800
                                 329 *$        AT LOCATION:                                                $ 00032900
                                 330 *$                          A. A1                                     $ 00033000
                                 331 *$                          B. D5                                     $ 00033100
                                 332 *$                          C. E4                                     $ 00033200
                                 333 *$                          D. D3                                     $ 00033300
                                 334 *$                                        PUT ANSWER HERE________    $ 00033400
                                 335 *$$$$$$$$$$$$$$$$$$$$$$$$$$$$$$$$$$$$$$$$$$$$$$$$$$$$$$$$$$$$$$$$$$$$$$$$ 00033500
```

```
 338 *========================== ANSWER 16.7 =========================== 00033800
 339 *=                                                                 = 00033900
 340 *=                             ****A1*********                     = 00034000
 341 *=                            *               *                    = 00034100
 342 *=    THE ANSWER IS.....      *     ENTRY     * ....'A'            = 00034200
 343 *=                            *               *                    = 00034300
 344 *=                             ***************                     = 00034400
 345 *=                                                                 = 00034500
 346 *================================================================== 00034600
```

```
 348 *$$$$$$$$$$$$$$$$$$$$$$$$$$$ QUESTION 16.8 $$$$$$$$$$$$$$$$$$$$$$$$$$$$$$ 00034800
 349 *$                                                                 $ 00034900
 350 *$     THE END OF THE PROGRAM IS REPRESENTED BY THE BLOCK AT       $ 00035000
 351 *$      LOCATION:                                                  $ 00035100
 352 *$                         A. E4                                   $ 00035200
 353 *$                         B. D5                                   $ 00035300
 354 *$                         C. A1                                   $ 00035400
 355 *$                         D. D3                                   $ 00035500
 356 *$                                                                 $ 00035600
 357 *$                                  THE ANSWER GOES HERE----->_____ $ 00035700
 358 *$                                                                 $ 00035800
 359 *$$$$$$$$$$$$$$$$$$$$$$$$$$$$$$$$$$$$$$$$$$$$$$$$$$$$$$$$$$$$$$$$$$ 00035900
```

```
LOC  OBJECT CODE    ADDR1 ADDR2  STMT   SOURCE STATEMENT                                    F08APR70   9/16/70


                                 *============================ ANSWER 16.8 ========================== 00036200
                                 *=                                                                  = 00036300
                                 *=                        ****D3*********                           = 00036400
                                 *=                       *               *                          = 00036500
                                 *=    THE ANSWER IS....  *  END OF SORT  * .....'D'.               = 00036600
                                 *=                       *               *                          = 00036700
                                 *=                        **************                            = 00036800
                                 *=                                                                  = 00036900
                                 *=================================================================== 00037000


                                 *$$$$$$$$$$$$$$$$$$$$$$$$$$$$$ QUESTION 16,9 $$$$$$$$$$$$$$$$$$$$$$$$$$$ 00037200
                                 *$                                                                  $ 00037300
                                 *$        THE BLOCK AT 'A1' IN THE FLOWCHART REPRESENTS WHICH OF THE  $ 00037400
                                 *$          FOLLOWING STATEMENTS IN THE ASSEMBLER LISTING ?           $ 00037500
                                 *$                                                          A       $ 00037600
                                 *$                   A.   OUT     DC    H'00'                  N       $ 00037700
                                 *$                   B.           C     @F,CEILING             S       $ 00037800
                                 *$                   C.   ALTSORT CSECT                        I       $ 00037900
                                 *$                   D.           STM   @E,@C,12(@D)           V       $ 00038000
                                 *$                                                          _____    $ 00038100
                                 *$$$$$$$$$$$$$$$$$$$$$$$$$$$$$$$$$$$$$$$$$$$$$$$$$$$$$$$$$$$$$$$$$$$$$$$ 00038200
```

```
 385 *========================== ANSWER 16.9 ========================== 00038500
 386 *=                                                                = 00038600
 387 *=                         *****                                  = 00038700
 388 *=                         *                                      = 00038800
 389 *=                    ANS= *                                      = 00038900
 390 *=                         *                                      = 00039000
 391 *=                         *                                      = 00039100
 392 *=                         *****                                  = 00039200
 393 *=                                           "GOT THAT,ITS C."    = 00039300
 394 *================================================================ 00039400
```

```
 396 *$$$$$$$$$$$$$$$$$$$$$$$$$$$$$ QUESTION 16.10 $$$$$$$$$$$$$$$$$$$$$$$$$$ 00039600
 397 *$                                                                     $ 00039700
 398 *$       THE BLOCK AT 'E1' IN THE FLOWCHART REPRESENTS 64 BEING         $ 00039800
 399 *$        PLACED IN THE LOCATION WHOSE ASSEMBLED                        $ 00039900
 400 *$        ADDRESS IS:                                                   $ 00040000
 401 *$                            A. X'28'                                  $ 00040100
 402 *$                            B. X'52'                                  $ 00040200
 403 *$                            C. X'260'   THE ANSWER IS_________.       $ 00040300
 404 *$                            D. X'258'                                 $ 00040400
 405 *$                                                                      $ 00040500
 406 *$$$$$$$$$$$$$$$$$$$$$$$$$$$$$$$$$$$$$$$$$$$$$$$$$$$$$$$$$$$$$$$$$$$$$$$ 00040600
```

```
409 *=========================== ANSWER 16.10 ============================== 00040900
410 *=                                                                     = 00041000
411 *=          THE ANSWER IS...........................................'C'= 00041100
412 *=                                                                     = 00041200
413 *=                                                             "IT'S   = 00041300
414 *=                                                              STILL  = 00041400
415 *=                                                                'C'  = 00041500
416 *======================================================================= 00041600
```

```
418 *$$$$$$$$$$$$$$$$$$$$$$$$$$$$ QUESTION 16.11 $$$$$$$$$$$$$$$$$$$$$$$$$$$ 00041800
419 *$                                                                     $ 00041900
420 *$                                                                     $ 00042000
421 *$       THE 'YES' LEG OF THE DECISION BLOCK AT 'B2' OF THE            $ 00042100
422 *$       FLOWCHART DIRECTLY RESULTS IN WHICH OF THE FOLLOWING:         $ 00042200
423 *$                                                                     $ 00042300
424 *$                           A. 1 BEING ADDED TO 'CEILING'             $ 00042400
425 *$                           B. 1 BEING SUBTRACTED FROM 'FLOOR'        $ 00042500
426 *$                           C. 1 BEING ADDED TO 'FLOOR'               $ 00042600
427 *$                           D. NOTHING BEING ADDED TO THE WALLS.      $ 00042700
428 *$                                                                     $ 00042800
429 *$                                                                     $ 00042900
430 *$$$$$$$$$$$$$$$$$$$$$$$$$$$$$$$$$$$$$$$$$$$$$$$$$$$$$$$$$$$$$$$$$$$$$$$ 00043000
```

```
433 *=========================== ANSWER 16.11 ============================= 00043300
434 *=                                                                    = 00043400
435 *=                                                                    = 00043500
436 *=       THE ANSWER IS ........'B'                                    = 00043600
437 *=                                                                    = 00043700
438 *====================================================================== 00043800
```

```
440 *$$$$$$$$$$$$$$$$$$$$$$$$$$$$ QUESTION 16.12 $$$$$$$$$$$$$$$$$$$$$$$$$$ 00044000
441 *$                                                                    $ 00044100
442 *$                                                                    $ 00044200
443 *$       THE PAIR OF INSTRUCTIONS AT ASSEMBLED ADDRESS A4 AND A8      $ 00044300
444 *$       IN THE LISTING ARE REPRESENTED BY THE FLOWCHART BLOCK AT     $ 00044400
445 *$       LOCATION:                                                    $ 00044500
446 *$                                                                    $ 00044600
447 *$                           A. B2                                    $ 00044700
448 *$                           B. D2                                    $ 00044800
449 *$                           C. C4                                    $ 00044900
450 *$                           D. D5                                    $ 00045000
451 *$                                                                    $ 00045100
452 *$             THE ANSWER IS ______________.                          $ 00045200
453 *$                                                                    $ 00045300
454 *$$$$$$$$$$$$$$$$$$$$$$$$$$$$$$$$$$$$$$$$$$$$$$$$$$$$$$$$$$$$$$$$$$$$$$ 00045400
```

```
457 *============================ ANSWER 16.12 ============================= 00045700
458 *=                                                                     = 00045800
459 *=                                                                     = 00045900
460 *=       THE CORRECT ANSWER IS     'C'                                 = 00046000
461 *=                                                                     = 00046100
462 *=                                                                     = 00046200
463 *======================================================================= 00046300
```

```
465 *$$$$$$$$$$$$$$$$$$$$$$$$$$$$ QUESTION 16.13 $$$$$$$$$$$$$$$$$$$$$$$$$$$$$ 00046500
466 *$                                                                     $ 00046600
467 *$       T R U E / F A L S E                                           $ 00046700
468 *$                                                                     $ 00046800
469 *$       THE ROUTINE REPRESENTED BY THE BLOCK AT E3 MAY BE ENTERED     $ 00046900
470 *$       FROM BOTH THE INSTRUCTION AT ASSEMBLED ADDRESS AC AND         $ 00047000
471 *$       THE ONE AT ASSEMBLED ADDRESS 72.                              $ 00047100
472 *$                                                                     $ 00047200
473 *$                                                                     $ 00047300
474 *$$$$$$$$$$$$$$$$$$$$$$$$$$$$$$$$$$$$$$$$$$$$$$$$$$$$$$$$$$$$$$$$$$$$$$$ 00047400
```

```
  477 *============================= ANSWER 16.13 ============================ 00047700
  478 *=                                                                     = 00047800
  479 *=                                                                     = 00047900
  480 *=       THAT STATEMENT IS VERY TRUE.                                  = 00048000
  481 *=                                                                     = 00048100
  482 *======================================================================= 00048200
```

```
  484 *$$$$$$$$$$$$$$$$$$$$$$$$$$$$$ QUESTION 16.14 $$$$$$$$$$$$$$$$$$$$$$$$$$ 00048400
  485 *$                                                                     $ 00048500
  486 *$                                                                     $ 00048600
  487 *$       THE FUNCTION OF THE FLOWCHART BLOCKS AT B2,C2,D2,E3 AND E2    $ 00048700
  488 *$       IS:                                                           $ 00048800
  489 *$                           A. PUSH THE LOWEST NUMBER UP TO THE LOW   $ 00048900
  490 *$                                END OF THE LIST.                     $ 00049000
  491 *$                           B. PUSH THE LOWEST NUMBER DOWN TO THE     $ 00049100
  492 *$                                UPPER END OF THE LIST.               $ 00049200
  493 *$                           C. PUSH THE HIGHEST NUMBER DOWN TO THE    $ 00049300
  494 *$                                UPPER END OF THE LIST.               $ 00049400
  495 *$                           D. PUSH AN AVERAGE NUMBER NOWHERE.        $ 00049500
  496 *$                                                                     $ 00049600
  497 *$$$$$$$$$$$$$$$$$$$$$$$$$$$$$$$$$$$$$$$$$$$$$$$$$$$$$$$$$$$$$$$$$$$$$$$ 00049700
```

```
LOC  OBJECT CODE    ADDR1 ADDR2  STMT   SOURCE STATEMENT                                                     F08APR70   9/16/70



                                 500 *============================ ANSWER 16.14 ============================ 00050000
                                 501 *=                                                                     = 00050100
                                 502 *=                                                                     = 00050200
                                 503 *=       THE ANSWER IS ---------------------> 'C'                      = 00050300
                                 504 *=                                                                     = 00050400
                                 505 *=                                                                     = 00050500
                                 506 *====================================================================== 00050600




                                 508 *$$$$$$$$$$$$$$$$$$$$$$$$$$$$ QUESTION 16.15 $$$$$$$$$$$$$$$$$$$$$$$$$$ 00050800
                                 509 *$                                                                     $ 00050900
                                 510 *$       T R U E / F A L S E                                           $ 00051000
                                 511 *$                                                                     $ 00051100
                                 512 *$       THE DECISION BLOCK AT 'A2' GOES TO 'END OF SORT'              $ 00051200
                                 513 *$       WHEN THE HIGHEST NUMBER IS AT THE BOTTOM OF THE LIST.         $ 00051300
                                 514 *$                                                                     $ 00051400
                                 515 *$$$$$$$$$$$$$$$$$$$$$$$$$$$$$$$$$$$$$$$$$$$$$$$$$$$$$$$$$$$$$$$$$$$$$$ 00051500
```

```
LOC  OBJECT CODE    ADDR1 ADDR2  STMT   SOURCE STATEMENT                                    FORAPR70   9/16/70

                                 518 *============================ ANSWER 16.15 ============================= 00051800
                                 519 *=                                                                    = 00051900
                                 520 *=       THE STATEMENT IS   F   A   L   S   E.                         = 00052000
                                 521 *=                                                                    = 00052100
                                 522 *=       IT GOES TO 'END OF SORT' WHEN AT THE BEGINNING OF A DOWNWARD = 00052200
                                 523 *=       SCAN IT IS DETERMINED THAT ALL NUMBERS HAVE BEEN SORTED.     = 00052300
                                 524 *=                                                                    = 00052400
                                 525 *=================================================================== 00052500


                                 527 *$$$$$$$$$$$$$$$$$$$$$$$$$$$$$ QUESTION 16.16 $$$$$$$$$$$$$$$$$$$$$$$$$$$ 00052700
                                 528 *$                                                                    $ 00052800
                                 529 *$                                                                    $ 00052900
                                 530 *$       THE FLOWCHART BLOCK AT 'A5' REPRESENTS WHICH OF THE          $ 00053000
                                 531 *$       FOLLOWING:                                                   $ 00053100
                                 532 *$                          A. 1 BEING ADDED TO 'CEILING'.            $ 00053200
                                 533 *$                          B. 1 BEING SUBTRACTED FROM 'CEILING'.     $ 00053300
                                 534 *$                          C. STARS FALLING ON 'ALABAMA'.            $ 00053400
                                 535 *$                          D. 1 BEING ADDED TO 'FLOOR'.              $ 00053500
                                 536 *$                                                                    $ 00053600
                                 537 *$       THE ANSWER IS_____________.                                  $ 00053700
                                 538 *$                                                                    $ 00053800
                                 539 *$$$$$$$$$$$$$$$$$$$$$$$$$$$$$$$$$$$$$$$$$$$$$$$$$$$$$$$$$$$$$$$$$$$$$ 00053900
```

```
                                     542 *=========================== ANSWER 16.16 =========================== 00054200
                                     543 *=                                                                 = 00054300
                                     544 *=      THE ANSWER IS ............. 'A'                            = 00054400
                                     545 *=                                                                 = 00054500
                                     546 *=           O   WE'RE CAUSING THE VALUES OF 'CEILING' AND 'FLOOR'  = 00054600
                                     547 *=                 TO APPROACH EACH OTHER TO ALLOW US TO DETERMINE  = 00054700
                                     548 *=                 WHEN ALL THE NUMBERS IN OUR LIST HAVE BEEN      = 00054800
                                     549 *=                 SORTED.                                         = 00054900
                                     550 *=                                                                 = 00055000
                                     551 *=                                                                 = 00055100
                                     552 *================================================================== 00055200
```

```
                                     554 *$$$$$$$$$$$$$$$$$$$$$$$$$$$$$ QUESTION 16.17 $$$$$$$$$$$$$$$$$$$$$$$$$$ 00055400
                                     555 *$                                                                 $ 00055500
                                     556 *$      THE PROCESS BLOCK AT 'D4' REPRESENTS WHICH OF THE          $ 00055600
                                     557 *$      FOLLOWING INSTRUCTION STREAMS ?                            $ 00055700
                                     558 *$                                                                 $ 00055800
                                     559 *$        A                        B                   C           $ 00055900
                                     560 *$     ----------           ------------        ------------      $ 00056000
                                     561 *$     L   @1,I          @D09FE  LA  @F,I        L    @F,I          $ 00056100
                                     562 *$     SLA @1,2                  A   @F,I        BCTR @F,0          $ 00056200
                                     563 *$     L   @F,LIST-4(@1)         ST  @F,I        ST   @F,I          $ 00056300
                                     564 *$                                                                 $ 00056400
                                     565 *$                                                                 $ 00056500
                                     566 *$                 THE ANSWER IS ___________.                      $ 00056600
                                     567 *$                                                                 $ 00056700
                                     568 *$$$$$$$$$$$$$$$$$$$$$$$$$$$$$$$$$$$$$$$$$$$$$$$$$$$$$$$$$$$$$$$$$$ 00056800
```

```
LOC  OBJECT CODE    ADDR1 ADDR2  STMT   SOURCE STATEMENT                                    F08APR70   9/16/70

                                 571 *============================ ANSWER 16.17 ============================= 00057100
                                 572 *=                                                                    = 00057200
                                 573 *=        THE ANSWER IS ------->'C'                                   = 00057300
                                 574 *=                                                                    = 00057400
                                 575 *===================================================================== 00057500


                                 577 *++++++++++++++++++++++++++++ W I S D O M ++++++++++++++++++++++++++++ 00057700
                                 578 *+                                                                    + 00057800
                                 579 *+                                                                    + 00057900
                                 580 *+        NOW THAT WE'VE BEEN THROUGH THE FLOWCHART AND DISCUSSED THE + 00058000
                                 581 *+        WORKINGS OF THE PROGRAM TO SOME EXTENT, LET'S USE THE FLOW- + 00058100
                                 582 *+        CHART TO SOLVE A PROBLEM. I DON'T KNOW WHETHER YOU NOTICED  + 00058200
                                 583 *+        IT OR NOT BUT THE SORT DID'NT WORK PROPERLY.                + 00058300
                                 584 *+                          LET'S TRACK THE PROBLEM DOWN.             + 00058400
                                 585 *+  LET US PROCEED....                                                + 00058500
                                 586 *+                                                                    + 00058600
                                 587 *+++++++++++++++++++++++++++++++++++++++++++++++++++++++++++++++++++ 00058700


                                 589 *$$$$$$$$$$$$$$$$$$$$$$$$$$$$$ QUESTION 16.18 $$$$$$$$$$$$$$$$$$$$$$$$$$ 00058900
                                 590 *$                                                                    $ 00059000
                                 591 *$        T R U E / F A L S E                                         $ 00059100
                                 592 *$                                                                    $ 00059200
                                 593 *$        THE 64 FULLWORDS AT SYMBOLIC LOCATION 'LIST' SHOULD BE SORTED$ 00059300
                                 594 *$        WITH THE HIGHEST NUMBER AT 'LIST' AND LOWEST NUMBER AT      $ 00059400
                                 595 *$        'LIST+FC'.                                                  $ 00059500
                                 596 *$                                                                    $ 00059600
                                 597 *$$$$$$$$$$$$$$$$$$$$$$$$$$$$$$$$$$$$$$$$$$$$$$$$$$$$$$$$$$$$$$$$$$$$$$$ 00059700
```

```
600 *============================ ANSWER 16.18 ============================ 00060000
601 *=                                                                    = 00060100
602 *=        F   A   L   S   E   T'OTHER WAY ROUND.                      = 00060200
603 *=                                                                    = 00060300
604 *====================================================================== 00060400
```

```
606 *$$$$$$$$$$$$$$$$$$$$$$$$$$$$ QUESTION 16.19 $$$$$$$$$$$$$$$$$$$$$$$$$$ 00060600
607 *$                                                                    $ 00060700
608 *$                                                                    $ 00060800
609 *$        T R U E / F A L S E                                         $ 00060900
610 *$                                                                    $ 00061000
611 *$        THE CONTENTS OF THE LOCATION CALLED 'LIST' ARE SORTED       $ 00061100
612 *$        CORRECTLY IN THE STORAGE DUMP.                              $ 00061200
613 *$                                                                    $ 00061300
614 *$$$$$$$$$$$$$$$$$$$$$$$$$$$$$$$$$$$$$$$$$$$$$$$$$$$$$$$$$$$$$$$$$$$$$$ 00061400
```

```
617 *============================ ANSWER 16.19 ============================ 00061700
618 *=                                                                    = 00061800
619 *=             THE ANSWER IS FLAES.  THEY'RE SORTED ABOUT AS WELL     = 00061900
620 *=             AS 'FALSE' WAS.                                        = 00062000
621 *=                                                                    = 00062100
622 *====================================================================== 00062200
```

```
624 *$$$$$$$$$$$$$$$$$$$$$$$$$$$$ QUESTION 16.20 $$$$$$$$$$$$$$$$$$$$$$$$$$ 00062400
625 *$                                                                    $ 00062500
626 *$                                                                    $ 00062600
627 *$       THE PROGRAM CHECK WHICH CAUSED THE DUMP TO BE TAKEN          $ 00062700
628 *$       RESULTED FROM:                                               $ 00062800
629 *$                                                                    $ 00062900
630 *$                           A. A BAD INSTRUCTION AT ASSEMBLED ADDRESS$ 00063000
631 *$                               'A4'.                                $ 00063100
632 *$                           B. A CALL FOR THE NORMAL 'END OF SORT'   $ 00063200
633 *$                               DUMP.                                $ 00063300
634 *$                           C. A SPECIFICATION EXCEPTION.            $ 00063400
635 *$                           D. LIGHTENING.                           $ 00063500
636 *$                                                                    $ 00063600
637 *$             THE ANSWER IS____________.                             $ 00063700
638 *$                                                                    $ 00063800
639 *$$$$$$$$$$$$$$$$$$$$$$$$$$$$$$$$$$$$$$$$$$$$$$$$$$$$$$$$$$$$$$$$$$$$$$$ 00063900
```

```
642 *=========================== ANSWER 16.20 ===========================  00064200
643 *=                                                                 =  00064300
644 *=       THE ANSWER IS 'B'                                         =  00064400
645 *=                                                                 =  00064500
646 *=       SO,,,, THE DUMP TELLS US THAT THE SORT ENDED CORRECTLY,   =  00064600
647 *=       AT LEAST AT THE CORRECT LOCATION. ON THE OTHER HAND       =  00064700
648 *=       THE CONTENTS OF 'LIST' IN THE CORE DUMP SAYS THAT THE     =  00064800
649 *=       SORT SORTA NOT SORTED. LET'S PROVE WHAT GREAT TROUBLE     =  00064900
650 *=       SHOOTERS WE ARE AND GO FIND OUT WHY THIS SORT SORTA       =  00065000
651 *=       NOT SORTED,  OKAY ?                                       =  00065100
652 *=                                                                 =  00065200
653 *==================================================================== 00065300




655 *$$$$$$$$$$$$$$$$$$$$$$$$$$$$$ QUESTION 16.21 $$$$$$$$$$$$$$$$$$$$$$$$$$$$  00065500
656 *$                                                                     $  00065600
657 *$                                                                     $  00065700
658 *$       ACCORDING TO THE FLOWCHART THE ORDER OF EVENTS AFTER          $  00065800
659 *$       ESTABLISHING THE BASE REG. IS:                                $  00065900
660 *$                                                                     $  00066000
661 *$    |        A          |        B         |         C          |    $  00066100
662 *$    +-------------------+------------------+--------------------+    $  00066200
663 *$    |                   |                  |                    |    $  00066300
664 *$ 1.|SET 'CT' TO 64     | SET 'CT' TO 64   | SET 'CEILING' TO 1 |    $  00066400
665 *$ 2.|SET 'FLOOR' TO 64  | SET 'CEILING' TO 1| SET 'FLOOR' TO 64 |    $  00066500
666 *$ 3.|SET 'CEILING' TO 1| SET FLOOR TO 64   | SET 'CT' TO 64     |    $  00066600
667 *$    |                   |                  |                    |    $  00066700
668 *$    +-------------------+------------------+--------------------+    $  00066800
669 *$                                                                     $  00066900
670 *$                                                                     $  00067000
671 *$                                                                     $  00067100
672 *$$$$$$$$$$$$$$$$$$$$$$$$$$$$$$$$$$$$$$$$$$$$$$$$$$$$$$$$$$$$$$$$$$$$$$$$$  00067200
```

```
LOC  OBJECT CODE    ADDR1 ADDR2  STMT   SOURCE STATEMENT                                    F08APR70   9/16/70

                                 675 *============================ ANSWER 16.21 ============================= 00067500
                                 676 *=                                                                    = 00067600
                                 677 *=                                                                    = 00067700
                                 678 *=       THE ANSWER IS 'B'.                                           = 00067800
                                 679 *=                                                                    = 00067900
                                 680 *==================================================================== 00068000

                                 682 *$$$$$$$$$$$$$$$$$$$$$$$$$$$$$$ QUESTION 16.22 $$$$$$$$$$$$$$$$$$$$$$$$$$$$ 00068200
                                 683 *$                                                                    $ 00068300
                                 684 *$                                                                    $ 00068400
                                 685 *$      THE CONTENTS OF 'CT', 'CEILING'AND 'FLOOR' (IN DECIMAL)       $ 00068500
                                 686 *$       IN STORAGE ARE:                                              $ 00068600
                                 687 *$                                                                    $ 00068700
                                 688 *$                            A. 63,1,64                              $ 00068800
                                 689 *$                            B. 64,64,1                              $ 00068900
                                 690 *$                            C. 1,1,64                               $ 00069000
                                 691 *$                            D. 64,1,63                              $ 00069100
                                 692 *$                                                                    $ 00069200
                                 693 *$$$$$$$$$$$$$$$$$$$$$$$$$$$$$$$$$$$$$$$$$$$$$$$$$$$$$$$$$$$$$$$$$$$$$$$$ 00069300
```

```
 696 *=========================== ANSWER 16.22 =========================== 00069600
 697 *=                                                                 = 00069700
 698 *=                                                                 = 00069800
 699 *=       THE ANSWER IS...........'D'                               = 00069900
 700 *=                                                                 = 00070000
 701 *=       HEY, 'FLOOR IS ONE LOWER THAN IT WAS WHEN WE STARTED.     = 00070100
 702 *=       THIS MAY HAVE SOME SIGNIFICANCE,SO KEEP IT IN MIND.       = 00070200
 703 *=                                                                 = 00070300
 704 *================================================================== 00070400
```

```
 706 *$$$$$$$$$$$$$$$$$$$$$$$$$$$$ QUESTION 16.23 $$$$$$$$$$$$$$$$$$$$$$$$$ 00070600
 707 *$                                                                 $ 00070700
 708 *$                                                                 $ 00070800
 709 *$       THE ORDER OF THE NUMBERS IN THE 'LIST' IN STORAGE ARE:    $ 00070900
 710 *$                                                                 $ 00071000
 711 *$                           A. THE SAME AS THE ORDER AT ASSEMBLY TIME$ 00071100
 712 *$                           B. THE LOWEST NUMBER IS AT THE        $ 00071200
 713 *$                                LOWER END OF THE LIST.           $ 00071300
 714 *$                           C. THE HIGHEST NUMBER IS AT THE       $ 00071400
 715 *$                                UPPER END OF THE LIST.           $ 00071500
 716 *$                           D. AN AVERAGE NUMBER IS IN THE MIDDLE $ 00071600
 717 *$                                OF THE LIST.                     $ 00071700
 718 *$                                                                 $ 00071800
 719 *$       THE ANSWER IS___________.                                 $ 00071900
 720 *$                                                                 $ 00072000
 721 *$$$$$$$$$$$$$$$$$$$$$$$$$$$$$$$$$$$$$$$$$$$$$$$$$$$$$$$$$$$$$$$$$$$ 00072100
```

```
LOC  OBJECT CODE    ADDR1 ADDR2  STMT   SOURCE STATEMENT                                    F08APR70   9/16/70

                                 724 *============================ ANSWER 16.23 ============================ 00072400
                                 725 *=                                                                    = 00072500
                                 726 *=                                                                    = 00072600
                                 727 *=       THE ANSWER IS...'C'                                          = 00072700
                                 728 *=                                                                    = 00072800
                                 729 *=                                                                    = 00072900
                                 730 *====================================================================== 00073000


                                 732 *$$$$$$$$$$$$$$$$$$$$$$$$$$$$$ QUESTION 16.24 $$$$$$$$$$$$$$$$$$$$$$$$$$$ 00073200
                                 733 *$                                                                    $ 00073300
                                 734 *$                                                                    $ 00073400
                                 735 *$       THE FLOWCHART BLOCKS WHICH REPRESENT THE FUNCTION OF PUSHING $ 00073500
                                 736 *$       THE HIGHEST NUMBER DOWN TO THE UPPER END OF THE LIST ARE:    $ 00073600
                                 737 *$                                                                    $ 00073700
                                 738 *$                           A. B2,C2,D2,E2 AND E3.                   $ 00073800
                                 739 *$                           B. A4,B4,C4,D4,AND D5.                   $ 00073900
                                 740 *$                           C. B1,C1,D1,E1, AND A2.                  $ 00074000
                                 741 *$                           D. A1,D3,A5,E1,C1,AND C4.                $ 00074100
                                 742 *$                                                                    $ 00074200
                                 743 *$       THE ANSWER IS____________.                                   $ 00074300
                                 744 *$                                                                    $ 00074400
                                 745 *$$$$$$$$$$$$$$$$$$$$$$$$$$$$$$$$$$$$$$$$$$$$$$$$$$$$$$$$$$$$$$$$$$$$$$$$ 00074500
```

```
 748 *============================ ANSWER 16.24 ============================ 00074800
 749 *=                                                                    = 00074900
 750 *=                                                                    = 00075000
 751 *=       THE ANSWER IS 'A'.                                           = 00075100
 752 *=                                                                    = 00075200
 753 *====================================================================== 00075300



 755 *$$$$$$$$$$$$$$$$$$$$$$$$$$$$ QUESTION 16.25 $$$$$$$$$$$$$$$$$$$$$$$$$$ 00075500
 756 *$                                                                    $ 00075600
 757 *$                                                                    $ 00075700
 758 *$       T R U E / F A L S E                                          $ 00075800
 759 *$                                                                    $ 00075900
 760 *$       WE HAVE JUST PROVEN BEYOND A SHADOW OF A DOUBT THAT          $ 00076000
 761 *$       THAT THE BLOCKS ON THE FLOWCHART AT B2,C2,D2,E2,AND E3       $ 00076100
 762 *$       FUNCTIONED PROPERLY ON THE FIRST PASS THROUGH.               $ 00076200
 763 *$                                                                    $ 00076300
 764 *$$$$$$$$$$$$$$$$$$$$$$$$$$$$$$$$$$$$$$$$$$$$$$$$$$$$$$$$$$$$$$$$$$$$$$ 00076400
```

```
767 *============================ ANSWER 16.25 ============================ 00076700
768 *=                                                                    = 00076800
769 *=                                                                    = 00076900
770 *=       THE ANSWER TO THAT LITTLE DITTY IS...T R U E.....            = 00077000
771 *=                                                                    = 00077100
772 *=       REMEMBER, WE DO HAVE THE HIGHEST NUMBER PUSHED DOWN          = 00077200
773 *=       TO THE UPPER END OF THE LIST.                                = 00077300
774 *=                                                                    = 00077400
775 *=............ L E T ' S   M O V E   O N .............                = 00077500
776 *=                                                                    = 00077600
777 *====================================================================== 00077700
```

```
779 *$$$$$$$$$$$$$$$$$$$$$$$$$$$$ QUESTION 16.26 $$$$$$$$$$$$$$$$$$$$$$$$$$ 00077900
780 *$                                                                    $ 00078000
781 *$                                                                    $ 00078100
782 *$       THE PROGRAM PASSED THROUGH THE FLOWCHART BLOCK               $ 00078200
783 *$       AT 'B3' :                                                    $ 00078300
784 *$                                                                    $ 00078400
785 *$                           A. ONCE                                  $ 00078500
786 *$                           B. TWICE                                 $ 00078600
787 *$                           C. 64 TIMES                              $ 00078700
788 *$                           D. NEVER EVER                            $ 00078800
789 *$                                                                    $ 00078900
790 *$       THE ANSWER TO THIS QUESTION IS ____________.                 $ 00079000
791 *$                                                                    $ 00079100
792 *$$$$$$$$$$$$$$$$$$$$$$$$$$$$$$$$$$$$$$$$$$$$$$$$$$$$$$$$$$$$$$$$$$$$$$ 00079200
```

```
LOC  OBJECT CODE    ADDR1 ADDR2  STMT   SOURCE STATEMENT                                    F08APR70   9/16/70

                                 795 *============================ ANSWER 16.26 ============================ 00079500
                                 796 *=                                                                    = 00079600
                                 797 *=       'A' IS THE CORRECT ANSWER.....THE LAST TIME WE LOOKED AT     = 00079700
                                 798 *=       'FLOOR' IN CORE WE FOUND IT TO BE ONE LOWER THAN THE         = 00079800
                                 799 *=       VALUE WE ORIGINALLY SET IT TO(64).                           = 00079900
                                 800 *=                                                                    = 00080000
                                 801 *=================================================================== 00080100

                                 803 *+++++++++++++ R E C A P ++++++++ R E C A P ++++++++ R E C A P +++++ 00080300
                                 804 *+                                                                  + 00080400
                                 805 *+                                                                  + 00080500
                                 806 *+       SO FAR WE HAVE FOUND OUT THAT:                             + 00080600
                                 807 *+                                                                  + 00080700
                                 808 *+             1. THE 'FLOOR' IS NOW EQUAL TO 63.                   + 00080800
                                 809 *+             2. THE 'CEILING' IS NOW EQUAL TO 1.                  + 00080900
                                 810 *+             3. THE HIGHEST NUMBER HAS BEEN PUSHED DOWN TO THE    + 00081000
                                 811 *+                UPPER END OF THE LIST.                            + 00081100
                                 812 *+             4. THE LOWEST NUMBER HAS NOT BEEN PUSHED UP TO THE    + 00081200
                                 813 *+                LOW END OF THE LIST.                              + 00081300
                                 814 *+                                                                  + 00081400
                                 815 *+       STATEMENT NUMBER 1 TELLS US THAT THE "RAISING" OF 'FLOOR'  + 00081500
                                 816 *+       WORKED PROPERLY.                                           + 00081600
                                 817 *+                                                                  + 00081700
                                 818 *+       STATEMENT NUMBER THREE TELLS US THAT THE DOWNWARD SCAN     + 00081800
                                 819 *+       WORKED PROPERLY.                                           + 00081900
                                 820 *+                                                                  + 00082000
                                 821 *+       STATEMENTS NUMBER TWO AND FOUR INDICATE THAT THE           + 00082100
                                 822 *+       PROGRAM EXITTED BEFORE EITHER SCANNING UPWARD OR           + 00082200
                                 823 *+      "LOWERING" THE 'CEILING'.                                   + 00082300
                                 824 *+                                                                  + 00082400
                                 825 *+                                                                  + 00082500
                                 826 *+++++++++++++++++++++++++++++++++++++++++++++++++++++++++++++++++ 00082600
```

```
LOC  OBJECT CODE    ADDR1 ADDR2  STMT   SOURCE STATEMENT                                  F08APR70   9/16/70


                                 829 *$$$$$$$$$$$$$$$$$$$$$$$$$$$$$ QUESTION 16.27 $$$$$$$$$$$$$$$$$$$$$$$$$$$ 00082900
                                 830 *$                                                                      $ 00083000
                                 831 *$                                                                      $ 00083100
                                 832 *$       T R U E / F A L S E                                            $ 00083200
                                 833 *$                                                                      $ 00083300
                                 834 *$       THE DECISION BLOCK AT LOCATION 'C3' ON THE                     $ 00083400
                                 835 *$       FLOWCHART DETERMINES IF ALL THE NUMBERS WERE SORTED            $ 00083500
                                 836 *$       PRIOR TO BEGINNING A UPWARD SCAN.                              $ 00083600
                                 837 *$                                                                      $ 00083700
                                 838 *$$$$$$$$$$$$$$$$$$$$$$$$$$$$$$$$$$$$$$$$$$$$$$$$$$$$$$$$$$$$$$$$$$$$$$$$ 00083800
```

```
841 *============================ ANSWER 16.27 ============================= 00084100
842 *=                                                                     = 00084200
843 *=                                                                     = 00084300
844 *=       THE ANSWER IS..........P R A V D A...........                 = 00084400
845 *=                                                                     = 00084500
846 *=       ENGLISH SUBTITLE........T R U E .....                         = 00084600
847 *=                                                                     = 00084700
848 *=       FOR YOUR INFORMATION THAT WAS RUSSIAN.                        = 00084800
849 *=                                                                     = 00084900
850 *======================================================================= 00085000
```

```
852 *$$$$$$$$$$$$$$$$$$$$$$$$$$$$ QUESTION 16.28 $$$$$$$$$$$$$$$$$$$$$$$$$$$ 00085200
853 *$                                                                     $ 00085300
854 *$                                                                     $ 00085400
855 *$       IF THE PROGRAM PASSED THROUGH THIS DECISION BLOCK AND OUT     $ 00085500
856 *$       THE 'YES' LEG IT WOULD :                                      $ 00085600
857 *$                                                                     $ 00085700
858 *$              A. GIVE THE SYMPTOMS WE HAVE NOW.                      $ 00085800
859 *$              B. INDICATE PROPER OPERATION AT THIS TIME              $ 00085900
860 *$              C. BE INCORRECT BUT NOT GIVE US THE PRESENT SYMPTOMS.  $ 00086000
861 *$              D. DO ABSOLUTELY NOTHING.                              $ 00086100
862 *$                                                                     $ 00086200
863 *$       THE ANSWER TO THIS MOST IMPORTANT QUESTION IS___________.     $ 00086300
864 *$                                                                     $ 00086400
865 *$$$$$$$$$$$$$$$$$$$$$$$$$$$$$$$$$$$$$$$$$$$$$$$$$$$$$$$$$$$$$$$$$$$$$$$ 00086500
```

```
868 *============================ ANSWER 16.28 ============================= 00086800
869 *=                                                                     = 00086900
870 *=                                                                     = 00087000
871 *=       THE ANSWER IS ...'A'                                          = 00087100
872 *=                                                                     = 00087200
873 *======================================================================= 00087300




875 *$$$$$$$$$$$$$$$$$$$$$$$$$$$$ QUESTION 16.29 $$$$$$$$$$$$$$$$$$$$$$$$$$$ 00087500
876 *$                                                                     $ 00087600
877 *$                                                                     $ 00087700
878 *$       THE INSTRUCTIONS DEPICTED BY THE BLOCK AT 'C3' OF THE         $ 00087800
879 *$       FLOWCHART ARE:                                                $ 00087900
880 *$                                                                     $ 00088000
881 *$            A                          B                C            $ 00088100
882 *$       ---------------         ----------------     -----------------$ 00088200
883 *$                                                                     $ 00088300
884 *$  DOWNWRD L    @F,CEILING     UPWARD L   @F,CEILING   L      @F,FLOOR$ 00088400
885 *$          C    @F,FLOOR              C   @F,FLOOR     BCTR   @F,0    $ 00088500
886 *$          BC   02,OUT                BC  04,OUT       C      @F,I    $ 00088600
887 *$                                                      BC     04,@D09FC 00088700
888 *$                                                                     $ 00088800
889 *$                                                                     $ 00088900
890 *$                                                                     $ 00089000
891 *$       THE ANSWER IS.............                                    $ 00089100
892 *$                                                                     $ 00089200
893 *$$$$$$$$$$$$$$$$$$$$$$$$$$$$$$$$$$$$$$$$$$$$$$$$$$$$$$$$$$$$$$$$$$$$$$$ 00089300
```

```
LOC  OBJECT CODE    ADDR1 ADDR2  STMT   SOURCE STATEMENT                                    F08APR70   9/16/70

                                 896 *============================ ANSWER 16.29 ============================= 00089600
                                 897 *=                                                                    = 00089700
                                 898 *=                                                                    = 00089800
                                 899 *=       'B' IS THE ANSWER.                                           = 00089900
                                 900 *=                                                                    = 00090000
                                 901 *===================================================================== 00090100
```

```
                                 903 *$$$$$$$$$$$$$$$$$$$$$$$$$$$$$ QUESTION 16.30 $$$$$$$$$$$$$$$$$$$$$$$$$$$ 00090300
                                 904 *$                                                                    $ 00090400
                                 905 *$                                                                    $ 00090500
                                 906 *$       T R U E / F A L S E                                          $ 00090600
                                 907 *$                                                                    $ 00090700
                                 908 *$       THE...BC    04,OUT....AT ASSEMBLED ADDRESS '8C' IN THE      $ 00090800
                                 909 *$       PROGRAM WILL BRANCH GIVEN THE PRESENT VALUES OF 'CEILING'    $ 00090900
                                 910 *$       AND 'FLOOR'.                                                 $ 00091000
                                 911 *$                                                                    $ 00091100
                                 912 *$$$$$$$$$$$$$$$$$$$$$$$$$$$$$$$$$$$$$$$$$$$$$$$$$$$$$$$$$$$$$$$$$$$$$$$$ 00091200
```

```
915 *============================ ANSWER 16.30 ============================ 00091500
916 *=                                                                    = 00091600
917 *=                                                                    = 00091700
918 *=             ---------> "MAIS OUI" .<------------                   = 00091800
919 *=       THAT'S FRENCH FOR "BUT YES", AND THAT = T R U E              = 00091900
920 *=                                                                    = 00092000
921 *=                                                                    = 00092100
922 *=       I THINK WE'RE GETTING VERY VERY CLOSE TO THE PROBLEM.       = 00092200
923 *=                                                                    = 00092300
924 *====================================================================== 00092400



926 *$$$$$$$$$$$$$$$$$$$$$$$$$$$$ QUESTION 16.31 $$$$$$$$$$$$$$$$$$$$$$$$$$ 00092600
927 *$                                                                    $ 00092700
928 *$                                                                    $ 00092800
929 *$       T R U E / F A L S E                                          $ 00092900
930 *$                                                                    $ 00093000
931 *$       THE PROGRAM SHOULD NOT EXIT TO 'OUT' AT THIS TIME.          $ 00093100
932 *$                  -----------                                       $ 00093200
933 *$                                                                    $ 00093300
934 *$$$$$$$$$$$$$$$$$$$$$$$$$$$$$$$$$$$$$$$$$$$$$$$$$$$$$$$$$$$$$$$$$$$$$$ 00093400
```

```
937 *============================ ANSWER 16.31 ============================ 00093700
938 *=                                                                    = 00093800
939 *=                                                                    = 00093900
940 *=       THE PROGRAM SHOULD NOT EXIT TO OUT AT THIS TIME , THEREFORE  = 00094000
941 *=       THE ANSWER IS T R U E....                                    = 00094100
942 *=                                                                    = 00094200
943 *====================================================================== 00094300
```

```
945 *$$$$$$$$$$$$$$$$$$$$$$$$$$$$ QUESTION 16.32 $$$$$$$$$$$$$$$$$$$$$$$$$$ 00094500
946 *$                                                                    $ 00094600
947 *$                                                                    $ 00094700
948 *$       IN ORDER TO FIX THIS PROBLEM WE SHOULD CHANGE THE            $ 00094800
949 *$       THE 'BRANCH' AS FOLLOWS:                                     $ 00094900
950 *$                                                                    $ 00095000
951 *$                           A.   BC   02,OUT                         $ 00095100
952 *$                           B.   BC   7,OUT                          $ 00095200
953 *$                           C.   BC   12,OUT                         $ 00095300
954 *$                           D.   BAL  14,15                          $ 00095400
955 *$                                                                    $ 00095500
956 *$                                                                    $ 00095600
957 *$       PLACE ANSWER HERE--------------------->___________           $ 00095700
958 *$                                                                    $ 00095800
959 *$$$$$$$$$$$$$$$$$$$$$$$$$$$$$$$$$$$$$$$$$$$$$$$$$$$$$$$$$$$$$$$$$$$$$$ 00095900
```

```
LOC  OBJECT CODE    ADDR1 ADDR2  STMT   SOURCE STATEMENT                                    F08APR70   9/16/70

                                  962 *=========================== ANSWER 16.32 ============================ 00096200
                                  963 *=                                                                  = 00096300
                                  964 *=                                                                  = 00096400
                                  965 *=       THE ANSWER IS....'A'                                       = 00096500
                                  966 *=                                                                  = 00096600
                                  967 *=================================================================== 00096700


                                  969 *+++++++++++++ R E C A P ++++++++ R E C A P ++++++++ R E C A P +++++ 00096900
                                  970 *+                                                                  + 00097000
                                  971 *+                                                                  + 00097100
                                  972 *+       THERE YOU HAVE IT . THE PROGRAM SUCCESSFULLY PUSHED THE    + 00097200
                                  973 *+       HIGHEST NUMBER DOWN TO THE UPPER END OF                    + 00097300
                                  974 *+       THE LIST. THE DOWNWARD SCAN THEN ENDED                     + 00097400
                                  975 *+       AND THE 'FLOOR' WAS "RAISED" BY SUBTRACTING 1 FROM IT.     + 00097500
                                  976 *+       THE ROUTINE THEN CHECKED TO SEE IF THE VALUE OF 'CEILING'  + 00097600
                                  977 *+       WAS LOWER THEN THE VALUE OF 'FLOOR'.                       + 00097700
                                  978 *+                                                                  + 00097800
                                  979 *+       1. THE VALUE OF 'CEILING' WAS LOADED INTO REG. 15 (1)      + 00097900
                                  980 *+       2. REGISTER 15 WAS THE COMPARED TO LOCATION 'FLOOR' (63)   + 00098000
                                  981 *+       3. REGISTER 15 IS LOWER THAN 'FLOOR' SO WE BRANCHED TO OUT. + 00098100
                                  982 *+                                                                  + 00098200
                                  983 *+                                                                  + 00098300
                                  984 *+                          F         I         N         I         + 00098400
                                  985 *+                                                                  + 00098500
                                  986 *+++++++++++++++++++++++++++++++++++++++++++++++++++++++++++++++++ 00098600
                                  987 *-->"V O I L A,  Y O U'R E   A N   A S S E M B L E R   L I N G U I S T" 00098700
```

```
LOC  OBJECT CODE    ADDR1 ADDR2  STMT   SOURCE STATEMENT                                   F08APR70   9/16/70


                                 990 ********************************************************************** 00099000
                                 991 *                                                                    * 00099100
                                 992 *  O PLEASE NOTIFY YOUR INSTRUCTOR OF YOUR COMPLETION BY DISPLAYING   * 00099200
                                 993 *       THE   Y E L L O W   A N S W E R C U E .                        * 00099300
                                 994 *                                                                    * 00099400
                                 995 *  O USE THIS SHEET FOR ANY COMMENTS YOU MAY HAVE.                   * 00099500
                                 996 *                                                                    * 00099600
                                 997 *                                                                    * 00099700
                                 998 ********************************************************************** 00099800



                                1001 *%%%%%%%%%%%%%%%%%%%%%%% C O M M E N T S %%%%%%%%%%%%%%%%%%%%%%%%%%%% 00100100
```

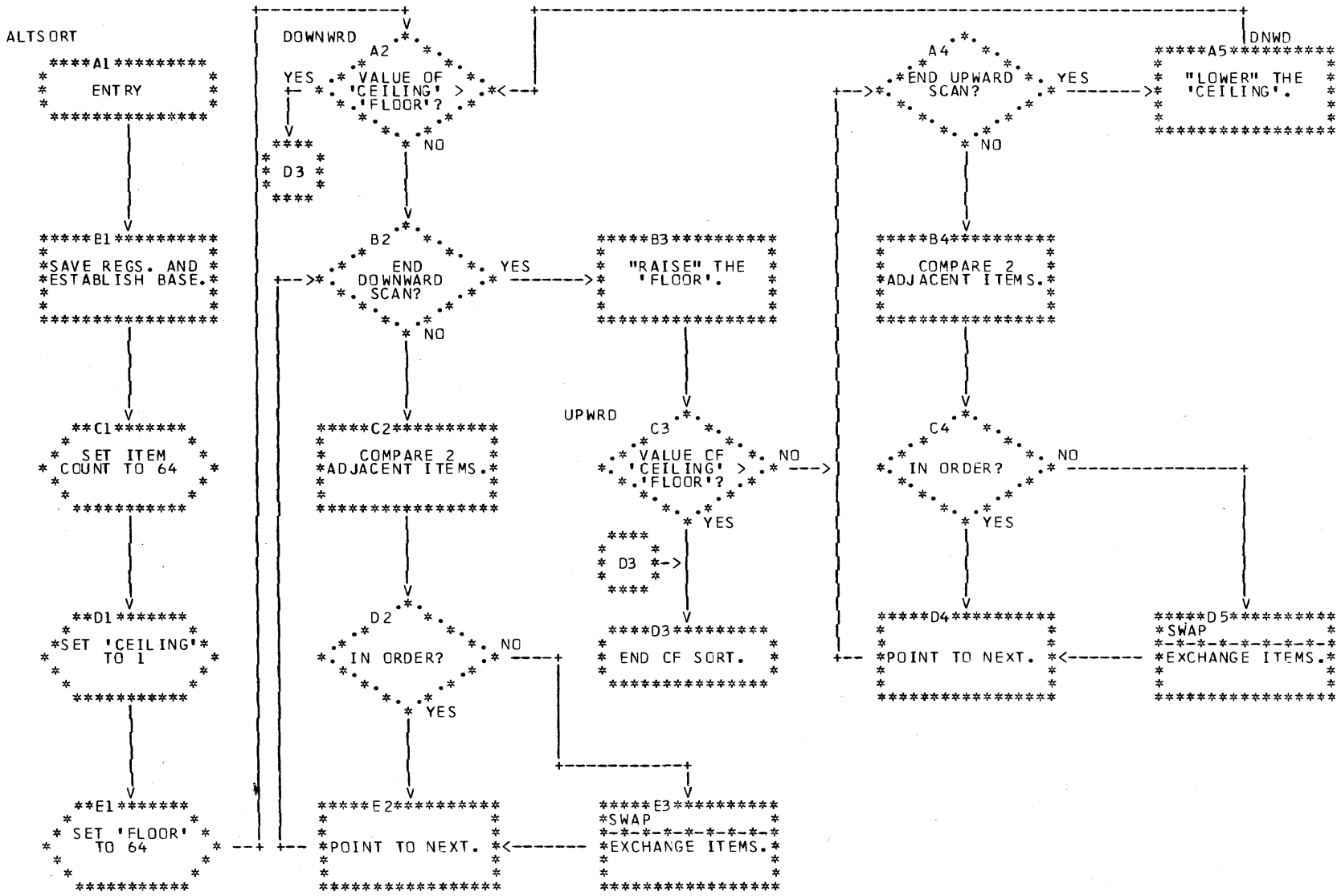
ALTSORT
A1
ENTRY
B1
SAVE REGS. AND ESTABLISH BASE.
C1
SET ITEM COUNT TO 64
D1
SET 'CEILING' TO 1
E1
SET 'FLOOR' TO 64
DOWNWRD
A2
VALUE OF 'CEILING' > 'FLOOR'?
YES
NO
D3
B2
END DOWNWARD SCAN?
YES
NO
C2
COMPARE 2 ADJACENT ITEMS.
D2
IN ORDER?
NO
YES
E2
POINT TO NEXT.
B3
"RAISE" THE 'FLOOR'.
UPWRD
C3
VALUE OF 'CEILING' > 'FLOOR'?
NO
YES
D3
END OF SORT.
E3
SWAP EXCHANGE ITEMS.
A4
END UPWARD SCAN?
YES
NO
B4
COMPARE 2 ADJACENT ITEMS.
C4
IN ORDER?
NO
YES
D4
POINT TO NEXT.
DNWD
A5
"LOWER" THE 'CEILING'.
D5
SWAP EXCHANGE ITEMS.

```
LOC   OBJECT CODE    ADDR1 ADDR2  STMT   SOURCE STATEMENT                                                    F08APR70   9/16/70

                                   56 ************************** S O R T   R O U T I N E ****************** 00005600
                                   57 *                                                                     * 00005700
000000                             58 ALTSORT  CSECT ,                                                       * 00005800
000000 90EC D00C          0000C    59          STM   @E,@C,12(@D)       SAVE REGISTERS                  0001* 00005900
000004 05B0                        60          BALR  @B,0               ESTABLISH BASE                  0001* 00006000
000006                             61          USING *+0000+00000,@B                                    0001* 00006100
000006 50D0 B20E          00214    62          ST    @D,@SAV001+4                                       0001* 00006200
00000A 41F0 B20A          00210    63          LA    @F,@SAV001                                         0001* 00006300
00000E 50F0 D008          00008    64          ST    @F,8(0,@D)                                         0001* 00006400
000012 18DF                        65          LR    @D,@F                                              0001* 00006500
000014 41F0 0040          00040    66          LA    @F,64              SET THE COUNT OF ITEMS TO 64    0003* 00006600
000018 50F0 B252          00258    67          ST    @F,CT                                              0003* 00006700
00001C 41F0 0001          00001    68 SETUP    LA    @F,1               SET 'CEILING' VALUE TO 1        0004* 00006800
000020 50F0 B256          0025C    69          ST    @F,CEILING                                         0004* 00006900
000024 58F0 B252          00258    70          L     @F,CT              SET 'FLOOR' VALUE  TO 64        0005* 00007000
000028 50F0 B25A          00260    71          ST    @F,FLOOR                                           0005* 00007100
00002C 58F0 B256          0025C    72 DOWNWRD  L     @F,CEILING         DOES VALUE OF 'CEILING'         0006* 00007200
000030 59F0 B25A          00260    73          C     @F,FLOOR           EXCEEDS VALUE OF 'FLOOR'?       0006* 00007300
000034 4720 B0CC          000D2    74          BC    02,OUT                 YES,END OF SORT.            0007* 00007400
000038 50F0 B25E          00264    75          ST    @F,I                   NO,SCAN DOWN TOWARD UPPER   0009* 00007500
00003C 58F0 B25A          00260    76 @D09FF   L     @F,FLOOR               END OF LIST.                0009* 00007600
000040 06F0                        77          BCTR  @F,0                                               0009* 00007700
000042 59F0 B25E          00264    78          C     @F,I                END OF SCAN ?                  0009* 00007800
000046 4740 B074          0007A    79          BC    04,@D09FC             YES.                        0009* 00007900
00004A 47F0 B058          0005E    80          BC    15,@D09FD             NO .                        0009* 00008000
00004E 41F0 0001          00001    81 @D09FE   LA    @F,1               POINT TO NEXT DATA ITEM.        0009* 00008100
000052 5AF0 B25E          00264    82          A     @F,I                                               0009* 00008200
000056 50F0 B25E          00264    83          ST    @F,I                                               0009* 00008300
00005A 47F0 B036          0003C    84          BC    15,@D09FF                                          0009* 00008400
00005E 5810 B25E          00264    85 @D09FD   L     @1,I               GENERATE THE ADDRESSES OF TWO   0010* 00008500
000062 8B10 0002          00002    86          SLA   @1,2                ADJACENT ITEMS, COMPARE THEM   0010* 00008600
000066 58F1 B0DA          000E0    87          L     @F,LIST(@1)                                        0010* 00008700
00006A 59F1 B0D6          000DC    88          C     @F,LIST-4(@1)      IF IN ORDER, CONTINUE,          0010* 00008800
00006E 47A0 B048          0004E    89          BC    10,@9FB                                            0010* 00008900
000072 45E0 B1DA          001E0    90          BAL   @E,SWAP             OTHERWISE, EXCHANGE THEM.      0011* 00009000
000076 47F0 B048          0004E    91          BC    15,@D09FE                                          0013* 00009100
00007A 58F0 B25A          00260    92 @D09FC   L     @F,FLOOR          "RAISE" THE 'FLOOR'             0014* 00009200
00007E 06F0                        93          BCTR  @F,0                                               0014* 00009300
000080 50F0 B25A          00260    94          ST    @F,FLOOR                                           0014* 00009400
000084 58F0 B256          0025C    95 UPWARD   L     @F,CEILING         IS VALUE OF 'CEILING' GREATER   0015* 00009500
000088 59F0 B25A          00260    96          C     @F,FLOOR           THEN THE VALUE OF 'FLOOR' ?     0015* 00009600
00008C 4740 B0CC          000D2    97          BC    04,OUT             YES. GO OUT                     0016* 00009700
000090 58F0 B25A          00260    98          L     @F,FLOOR           NO,SCAN UPWARD TOWARD LOW END OF0018* 00009800
000094 47F0 B0B0          000B6    99          BC    15,@D09F8          LIST                            0018* 00009900
000098 5810 B25E          00264   100 @D09F9   L     @1,I               GENERATE THE ADDRESSES OF TWO   0019* 00010000
00009C 8B10 0002          00002   101          SLA   @1,2                ADJACENT ITEMS.                0019* 00010100
0000A0 58F1 B0D6          000DC   102          L     @F,LIST-4(@1)                                      0019* 00010200
0000A4 59F1 B0DA          000E0   103          C     @F,LIST(@1)        AND IF THEY ARE OUT OF ORDER,   0019* 00010300
0000A8 47C0 B0AA          000B0   104          BC    12,@9F5            EXCHANGE THEM.                  0019* 00010400
0000AC 45E0 B1DA          001E0   105          BAL   @E,SWAP             GO TO SWAP                     0020* 00010500
0000B0                            106 @9F5     EQU   *                                                  0021* 00010600
0000B0 58F0 B25E          00264   107 @9F4     L     @F,I                                               0022* 00010700
0000B4 06F0                       108          BCTR  @F,0                                               0022* 00010800
0000B6 50F0 B25E          00264   109 @D09F8   ST    @F,I                                               0022* 00010900
0000BA 59F0 B256          0025C   110          C     @F,CEILING         SEE IF WE'RE AT THE LOW END OF  0022* 00011000
```

```
 LOC  OBJECT CODE    ADDR1 ADDR2  STMT   SOURCE STATEMENT                                          F08APR70   9/16/70

0000BE 47A0 B092           00098  111          BC    10,@D09F9              LIST IF YES                0022* 00011100
0000C2 41F0 0001           00001  112          LA    @F,1                "LOWER" THE 'CEILING'         0023* 00011200
0000C6 5AF0 B256           0025C  113          A     @F,CEILING                                        0023* 00011300
0000CA 50F0 B256           0025C  114          ST    @F,CEILING                                        0023* 00011400
0000CE 47F0 B026           0002C  115          BC    15,DOWNWRD                                        0024* 00011500
0000D2 0000                       116 OUT      DC    H'0'                 TAKE A DUMP TO SEE SORTED 'LIST'    * 00011600
0000D4 5800 D004           00004  117 @ELO1    L     @D,4(0,@D)           RESTORE REGISTERS            0028* 00011700
0000D8 98EC D00C           0000C  118          LM    @E,@C,12(@D)                                      0028* 00011800
0000DC 07FE                       119          BCR   15,@E                RETURN                       0028* 00011900

                                  121 ******************** L I S T ********** L I S T ******************** 00012100
                                  122 * LOW END OF---+                                                   * 00012200
                                  123 *   LIST       |                                                   * 00012300
                                  124 *              V                                                   * 00012400
0000DE 0000
0000E0 000000F40000008A           125 LIST     DC    F'244,138,45,77,1,56,952,118,35,62,321,49,75,841,33,2' * 00012500
000120 0000007500000209           126          DC    F'117,521,555,25,35,30,50,76,95,172,271,453,115,652,3' * 00012600
00015C 0000000400000029           127          DC    F'4,41,54,94,35,25,64,114,441,74,20,90,81,53,57,12,11,9' 00012700
0001A4 000000410000015E           128          DC    F'65,350,257,541,228,958,884,732,58,27,45,48,68,113,651' 00012800
                                  129 *                                                                 |* 00012900
                                  130 *                                                                 |* 00013000
                                  131 *                                                   UPPER END OF LIST+* 00013100
                                  132 ********************************************************************** 00013200

0001E0                            134          DS    0H                                                * 00013400
0001E0 5810 B25E           00264  135 SWAP     L     @1,I                GENERATE THE ADDRESSES OF THE     * 00013500
0001E4 8B10 0002           00002  136          SLA   @1,2                 ITEMS TO EXCHANGE.           0029* 00013600
0001E8 58F1 B0DA           000E0  137          L     @F,LIST(@1)                                       0029* 00013700
0001EC 57F1 B0D6           000DC  138          X     @F,LIST-4(@1)                                     0029* 00013800
0001F0 50F1 B0D6           000DC  139          ST    @F,LIST-4(@1)                                     0029* 00013900
0001F4 58F1 B0D6           000DC  140          L     @F,LIST-4(@1)                                     0030* 00014000
0001F8 57F1 B0DA           000E0  141          X     @F,LIST(@1)                                       0030* 00014100
0001FC 50F1 B0DA           000E0  142          ST    @F,LIST(@1)                                       0030* 00014200
000200 58F1 B0DA           000E0  143          L     @F,LIST(@1)                                       0031* 00014300
000204 57F1 B0D6           000DC  144          X     @F,LIST-4(@1)                                     0031* 00014400
000208 50F1 B0D6           000DC  145          ST    @F,LIST-4(@1)                                     0031* 00014500
00020C 07FE                       146          BCR   15,@E                RETURN TO MAINLINE ROUTINE.  0032* 00014600

00020E                            148 @DATA1   EQU   *                                                 * 00014800
000000                            149 @0       EQU   00                   EQUATES FOR REGISTERS 0-15    * 00014900
000001                            150 @1       EQU   01                                                 * 00015000
000002                            151 @2       EQU   02                                                 * 00015100
000003                            152 @3       EQU   03                                                 * 00015200
000004                            153 @4       EQU   04                                                 * 00015300
000005                            154 @5       EQU   05                                                 * 00015400
000006                            155 @6       EQU   06                                                 * 00015500
000007                            156 @7       EQU   07                                                 * 00015600
000008                            157 @8       EQU   08                                                 * 00015700
000009                            158 @9       EQU   09                                                 * 00015800
00000A                            159 @A       EQU   10                                                 * 00015900
00000B                            160 @B       EQU   11                                                 * 00016000
00000C                            161 @C       EQU   12                                                 * 00016100
```

```
LOC   OBJECT CODE    ADDR1 ADDR2  STMT   SOURCE STATEMENT                                                    F08APR70   9/16/70

00000D                            162 @D        EQU   13                                                              * 00016200
00000E                            163 @E        EQU   14                                                              * 00016300
00000F                            164 @F        EQU   15                                                              * 00016400
000210                            165           DS    0D                                                              * 00016500
000210                            166 @DATA     EQU   *                                                               * 00016600
000210                            167 @SAV001   EQU   @DATA+00000000      72 BYTE(S) ON WORD                        * 00016700
000258                            168 CT        EQU   @DATA+00000072      FULLWORD INTEGER                          * 00016800
00025C                            169 CEILING   EQU   @DATA+00000076      FULLWORD INTEGER                          * 00016900
000260                            170 FLOOR     EQU   @DATA+00000080      FULLWORD INTEGER                          * 00017000
000264                            171 I         EQU   @DATA+00000084      FULLWORD INTEGER                          * 00017100
000268                            172 @SAV002   EQU   @DATA+00000088      72 BYTE(S) ON WORD                        * 00017200
000210                            173           DS    00000160C                                                       * 00017300
00004E                            174 @9FB      EQU   @D09FE                                                          * 00017400
0000D4                            175 @EL02     EQU   @EL01                                                           * 00017500
```

```
LOC  OBJECT CODE    ADDR1 ADDR2  STMT   SOURCE STATEMENT          F08APR70   9/16/70
                                 1003          END                            00100300
```

9/16/70

| SYMBOL | LEN | VALUE | DEFN | REFERENCES |
|---|---|---|---|---|
| @A | 00001 | 00000A | 00159 | |
| @B | 00001 | 00000B | 00160 | 0060 0061 |
| @C | 00001 | 00000C | 00161 | 0059 0118 |
| @D | 00001 | 00000D | 00162 | 0059 0062 0064 0065 0117 0117 0118 |
| @DATA | 00001 | 000210 | 00166 | 0167 0168 0169 0170 0171 0172 |
| @DATA1 | 00001 | 00020E | 00148 | |
| @D09FC | 00004 | 00007A | 00092 | 0079 |
| @D09FD | 00004 | 00005E | 00085 | 0080 |
| @D09FE | 00004 | 00004E | 00081 | 0091 0174 |
| @D09FF | 00004 | 00003C | 00076 | 0084 |
| @D09F8 | 00004 | 0000B6 | 00109 | 0099 |
| @D09F9 | 00004 | 000098 | 00100 | 0111 |
| @E | 00001 | 00000E | 00163 | 0059 0090 0105 0118 0119 0146 |
| @EL01 | 00004 | 0000D4 | 00117 | 0175 |
| @EL02 | 00004 | 0000D4 | 00175 | |
| @F | 00001 | 00000F | 00164 | 0063 0064 0065 0066 0067 0068 0069 0070 0071 0072 0073 0075 0076 0077 0078 |
| | | | | 0081 0082 0083 0087 0088 0092 0093 0094 0095 0096 0098 0102 0103 0107 0108 |
| | | | | 0109 0110 0112 0113 0114 0137 0138 0139 0140 0141 0142 0143 0144 0145 |
| @SAV001 | 00001 | 000210 | 00167 | 0062 0063 |
| @SAV002 | 00001 | 000268 | 00172 | |
| @0 | 00001 | 000000 | 00149 | |
| @1 | 00001 | 000001 | 00150 | 0085 0086 0087 0088 0100 0101 0102 0103 0135 0136 0137 0138 0139 0140 0141 |
| | | | | 0142 0143 0144 0145 |
| @2 | 00001 | 000002 | 00151 | |
| @3 | 00001 | 000003 | 00152 | |
| @4 | 00001 | 000004 | 00153 | |
| @5 | 00001 | 000005 | 00154 | |
| @6 | 00001 | 000006 | 00155 | |
| @7 | 00001 | 000007 | 00156 | |
| @8 | 00001 | 000008 | 00157 | |
| @9 | 00001 | 000009 | 00158 | |
| @9FB | 00004 | 00004E | 00174 | 0089 |
| @9F4 | 00004 | 0000B0 | 00107 | |
| @9F5 | 00001 | 0000B0 | 00106 | 0104 |
| ALTSORT | 00001 | 000000 | 00058 | |
| CEILING | 00001 | 00025C | 00169 | 0069 0072 0095 0110 0113 0114 |
| CT | 00001 | 000258 | 00168 | 0067 0070 |
| DOWNWRD | 00004 | 00002C | 00072 | 0115 |
| FLOOR | 00001 | 000260 | 00170 | 0071 0073 0076 0092 0094 0096 0098 |
| I | 00001 | 000264 | 00171 | 0075 0078 0082 0083 0085 0100 0107 0109 0135 |
| LIST | 00004 | 0000E0 | 00125 | 0087 0088 0102 0103 0137 0138 0139 0140 0141 0142 0143 0144 0145 |
| OUT | 00002 | 0000D2 | 00116 | 0074 0097 |
| SETUP | 00004 | 000010 | 00068 | |
| SWAP | 00004 | 0001E0 | 00135 | 0090 0105 |
| UPWARD | 00004 | 000084 | 00095 | |

NO STATEMENTS FLAGGED IN THIS ASSEMBLY
*STATISTICS* SOURCE RECORDS (SYSIN) = 1003
*OPTIONS IN EFFECT* LIST, NODECK, LOAD, NORENT, XREF, NOTEST, ALGN, OS, LINECNT = 55
1200 PRINTED LINES

```
 F44-LEVEL LINKAGE EDITOR OPTIONS SPECIFIED NCAL
           VARIABLE OPTIONS USED -  SIZE=(45056,6144)-          DEFAULT OPTION(S) USED
****GO        DOES NOT EXIST BUT HAS BEEN ADDED TO DATA SET
```

```
F.P. REGS.  0A.59E900 00000051   F1.6A5138 E570259F   00.000008 00000000   00.000000 00000000

REGS 0-7     FFFFFF2E 000000FC 0001D9CC 000000C0    00019F58 0001A690 0001D7C0 0001C7B8
REGS 8-15    0001D9B0 00000000 0001D9D8 6F05AFB6    4007ECA2 0005B1C0 9F05B026 00000001

000000    00000000 00000000 00000000 00000000    0005AFB0 00000000 FFF50000 8F051F2A  *.......................5......*
000020    FFE50001 4007EA2C FFC50001 5F05B084    0000FF00 00000000 FE040130 80000A06  *.V.. ....E.......................*
000040    00000000 04000000 E0001468 00005920    02C040A4 0000996C 00040000 00007498  *................. .............*
000060    00040000 00007BC8 00040000 00007588    00000000 00012D10 00040000 0000751A  *.......H........................*

05AFA0    9C4E5050 9C5247F0 95C65070 9C665870    90ECD00C 05B050D0 B20E41F0 B20A50F0  *.......0.F..................0...0*
05AFC0    D00818DF 41F00040 50F0B252 41F0C001    50F0B256 58F0B252 50F0B25A 58F0B256  *.....0. .0...0...0...0...0...0..*
05AFE0    59F0B25A 4720B0CC 50F0B25E 58F0B25A    06F059F0 B25E4740 B07447F0 B05841F0  *.0.......0...0...0.0... ...0...0*
05B000    00015AF0 B25E50F0 B25E47F0 B0365810    B25E8B10 C00258F1 B0DA59F1 B0D647A0  *...0...0...0...........1...1.0..*
05B020    B04845E0 B1DA47F0 B04858F0 B25A06F0    50F0B25A 58F0B256 59F0B25A 4740B0CC  *.......0...0...0.0...0...0... ..*
05B040    58F0B25A 47F0B0B0 5810B25E 8B100002    58F1B0D6 59F1B0DA 47C0B0AA 45E0B1DA  *.0...0...........1.0.1..........*
05B060    58F0B25E 06F050F0 B25E59F0 B25647A0    B09241F0 00015AF0 B25650F0 B25647F0  *.0...0.0...0.......0...0...0...0*
05B080    B0260000 58D0D004 98ECD00C 07FE0000    00000C8A C000002D 00000C4D 00000001  *................................*
05B0A0    0000C038 000000F4 00000076 00000023    0000003E 00000141 00000031 0000004B  *.......4........................*
05B0C0    00000349 00000021 00000002 00000075    000C0209 0000022B 00000019 00000023  *................................*
05B0E0    0000001E 00000032 0000004C 0000005F    000000AC 0000010F 000001C5 00000073  *..........................E....*
05B100    0000028C 00000003 00000004 00000029    00000036 0000005E 00000023 00000019  *................................*
05B120    00000040 00000072 000001B9 0000004A    00000014 0000005A 00000051 00000035  *... ............................*
05B140    00000039 0000000C 0000000B 00000009    00000041 0000015E 00000101 0000021D  *................................*
05B160    000000E4 000003B8 00000374 000002DC    0000003A 0000001B 0000002D 00000030  *...U............................*
05B180    00000044 00000071 0000028B 000003BE    5810B25E 8B100002 58F1B0DA 57F1B0D6  *.......................1...1.0*
05B1A0    50F1B0D6 58F1B0D6 57F1B0DA 50F1B0DA    58F1B0DA 57F1B0D6 50F1B0D6 07FE0398  *.1.0.1.0.1...1...1...1.0.1.0....*
05B1C0    00065090 00066F68 000606C0 00060360    0000FFFF 00FFFFFF 0000000C 00000000  *................................*
05B1E0    00000160 00040007 00050007 00000008    E2E3D7C3 C1C2C3D5 C0FF0000 00F00F00  *................STPCABCN.....0..*
05B200    F0F0F0F0 44444444 00000040 00000001    0000003F 00000040 FD000000 E2E4F0F0  *0000....... ........... ....SU00*
05B220    F0F0F0F1 F2F3F4F5 F6F7F8F9 C1C2C3C4    C5C6E2F2 F2F240E3 C9D4C504 00400000  *000123456789ABCDEFS222 TIME.. ..*
05B240    00328000 C9C5C6F4 F5F0C940 E7E7E7E7    E7E7E7E7 4BE7E7E7 E7E7E7E7 E74BE7E7  *....IEF450I XXXXXXXX.XXXXXXXX.XX*
05B260    90ECD00C 05C004F0 07004110 C0100511    0F05B304 7FFF0A0E 58B00010 9110B074  *.......0........................*

05B820    50401010 4340A008 12444780 885C4820    A00E5420 8A9E4780 87FC0620 5A20B010  *. ... ..........................*
```

SR23-3469-0
Course 10331

Programming System Introduction Project Book 2 Supplementary Course Material Printed in U.S.A. SR23-3469-0

IBM

International Business Machines Corporation
Data Processing Division
1133 Westchester Avenue, White Plains, New York 10604
[U.S.A. only]

IBM World Trade Corporation
821 United Nations Plaza, New York, New York 10017
[International]