Honeywell

TEST AND REPAIR MANUAL

WCPU66LA/LB
WIOU66LA
WII066MA
WII084MA
WMMU66LA/LB
WDAU66LA/B/C/D
WMTP66LA/B/C/D

VOLUME 1

58010012

HARDWARE

58010012-501
DIST. NCO, XAN

REV B
APRIL 1986

PREFACE

This manual provides the level-1 Customer Services Representative with step-by-step procedures to replace, adjust, service, and validate maintenance actions previously diagnosed by a repair specialist.

Contained within this document are detailed procedures identifying the unit (by part number) to be repaired, the tools required, precautions to be observed, and the method used to validate a successful repair. Only those units identified as field replaceable are represented within this document.

The following notice is provided in accordance with the United States Federal Communications Commission's (FCC) regulations:

<u>Warning</u>: This equipment generates, uses, and can radiate radio frequency energy, and if not installed and used in accordance with the instruction manual, may cause interference to radio communications. The equipment manufactured after October 1,1983 has been tested and found to comply with the limits for a Class A computing device pursuant to Subpart J of Part 15 of FCC Rules, which are designed to provide reasonable protection against such interference when operated in a commercial environment. Operation of this equipment in a residential area is likely to cause interference, in which case the user at his own expense will be required to take whatever measures may be required to correct the interference.

RECORD OF REVISION			
REV	DATE	AUTHORIZATION	PAGES AFFECTED
A	12/85	PHAFPW973	VOLUME 1 58010012-031, 1F 58010012-013, 1 & 2F 58010012-501 58010012-011, 1F 58010012-014, 1F 58010012-035, 1F 58010012-531, 1 thru 8F 58010012, 1-1 thru 1-3F 58010012, 2-1 thru 2-190F 58010012, 3-1 thru 3-31F 58010012, 4-1 thru 4-7F VOLUME 2 58010012-502 58010012-011, 1F 58010012-532, 1 thru 5F 58010012, 5-1 thru 5-43F 58010012, 6-1 thru 6-50F 58010012, 7-1 thru 7-51F 58010012, 8-1 thru 8-24F APPENDIX A, A-1F APPENDIX B, B-1F

RECORD OF REVISION			
REV	DATE	AUTHORIZATION	PAGES AFFECTED
B	04/86	PHAFPW808	VOLUME 1 58010012-031, 1F 58010012-501 58010012-014, 1, 2F 58010012-034, 1F 58010012-531, 1 thru 8F 58010012, 1-1 thru 1-3F 58010012, 2-2 thru 2-6, 2-8 2-15, 2-16, 2-21, 2-22, 2-23, 2-27, 2-31, 2-35, 2-39 thru 2-47, 2-51, 2-58, 2-62, 2-66, 2-70, 2-74, 2-79, 2-83, 2-87, 2-91, 2-97, 2-101, 2-105, 2-109, 2-110, 2-113, 2-117, 2-121, 2-131, 2-139, 2-143, 2-147, 2-149.1, 2-152 thru 2-154, 2-156, 2-159, 2-163, 2-167, 2-171, 2-175, 2-179, 2-187 VOLUME 2 58010012-502 58010012-532, 1 thru 5F 58010012, 5-3, 5-4 58010012, 7-36 thru 7-38

SUMMARY OF REVISION B CHANGES:

1. Added shielded cable options to IMU and DAU.

2. Added Block Change C to IMU.

3. Corrected Maintenance Procedures references for all Remove/Replace Procedures (2.1 thru 2.38).

4. Added MTP and URP boards to Procedure 2.29.

5. Corrected Procedure 2.30.

Honeywell Large Systems Hardware Publications
P. O. Box 8000, MS B84
Phoenix, Arizona 85066-8000

TITLE

MANUAL #

REVISION

DATED

ERRORS IN PUBLICATION

SUGGESTIONS FOR IMPROVEMENT TO PUBLICATION

Your comments will be investigated by appropriate technical personnel and action will be taken as required. Receipt of all forms will be acknowledged; however, if you require a detailed reply, check here.

FROM: NAME _____ DATE _____

TITLE _____

ADDRESS _____

PHONE # _____

TABLE OF CONTENTS
VOLUME 1

LIST OF ILLUSTRATIONS

TABLES

VOLUME 2

LIST OF ILLUSTRATIONS

TABLES

1.0 GENERAL

1.1 SCOPE

This manual provides the level-1 Customer Services Representative with the detailed maintenance procedures for DPS 8 ORU removal, installation, and repair verification of the previously diagnosed faulty units.

The relationship of this manual to others in the DPS 8 maintenance documentation set is illustrated in Figure 1.1-1 of this manual and is explained in the General Section of DPS 8 System Manual, 58009888.

1.2 INTRODUCTION

This Test and Repair manual is divided into tabs by maintenance subject and by function. In all cases each tab is subdivided by part number, maintenance function, or specific topic, allowing ease of use.

Specific maintenance procedures may be located by referring to the Table of Contents, 58010012-530, or to the Part Number Index found in the forward portion of Section 2.

1.2.1 GENERAL SECTION

This section (Section 1) consists of introductory data, manual use information, and Figure 1.1-1 (DPS 8 Documentation Tree).

1.2.2 ORU REPLACEMENT

This section (Section 2) contains information on those hardware devices that have been identified as ORUs. Included are the ORU removal and replacement procedures. This section also includes the repair verification steps.

1.2.3 ORU ADJUSTMENTS

This section (Section 3) contains information on adjusting all associated ORU's that may be required.

1.2.4 SYSTEM OPERATION

This section (Section 4) consists of basic information necessary to release, test, and reassign those portions of an operational system identified as requiring maintenance.

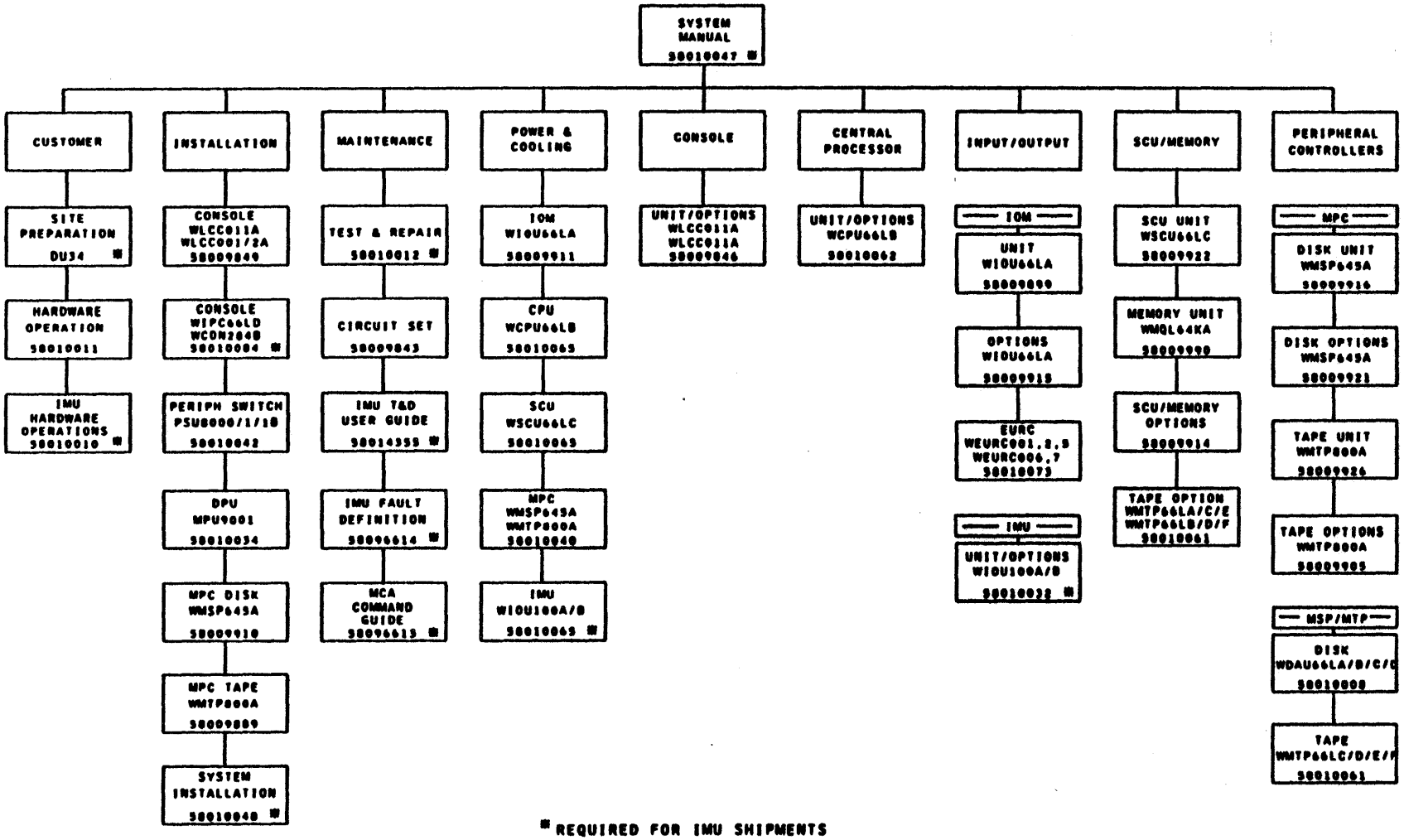

* REQUIRED FOR IMU SHIPMENTS

FIGURE 1.1-1. DPS 8-52/70 DOCUMENTATION TREE

1.2.5 PARTS PLANAR POWER

This section (Section 5) contains an exploded parts breakdown of all planar power supplies.

1.2.6 PARTS NON-PLANAR POWER

This section (Section 6) contains an exploded parts breakdown of all non-planar power supplies.

1.2.7 PARTS PWA, HARNESS, BACKPANELS

This section (Section 7) contains an exploded parts breakdown for all cabinets.

1.2.8 PARTS OPERATOR, MAINTENANCE PANEL

This section (Section 8) contains an exploded parts breakdown for all operator and maintenance panels.

1.2.9 APPENDIXES

This section (Appendixes) consists of operational information for proper use of various system monitoring and diagnostic software tools, e.g., KWIK and ELAN.

1.3 COMMENTS

Comments on this manual should be sent to:

Honeywell Large Systems Hardware Publications
P. O. Box 8000, MS C84
Phoenix, Arizona 85066-8000

1.4 REFERENCE DOCUMENTATION

The manuals, drawings, and specifications related to this document may be found in the Documentation Tree (Figure 1.1-1). Added reference material will be included as it is identified.

2.0 ORU REPLACEMENT

A ISSUED

This section is composed of all DPS 8 parts currently classified as an Optimum Replaceable Unit (ORU). Replaceable units are combined under generic maintenance procedures whenever possible, and are identified by a unique number that may be easily found via reference to the index found in Table 2-0.

Within each procedure there are specific figure identifiers referenced in the procedural steps. All referenced figures will be found at the beginning of the procedural text. The following example illustrates the intent of the figure identifiers:

Example: Press and release POWER ON switch at Operator Control Panel (Figure X.Y.Z-1, [3]).

FIGURE ID

WHERE: [3] = COMPONENT OR UNIT LOCATION IN IDENTIFIED FIGURE

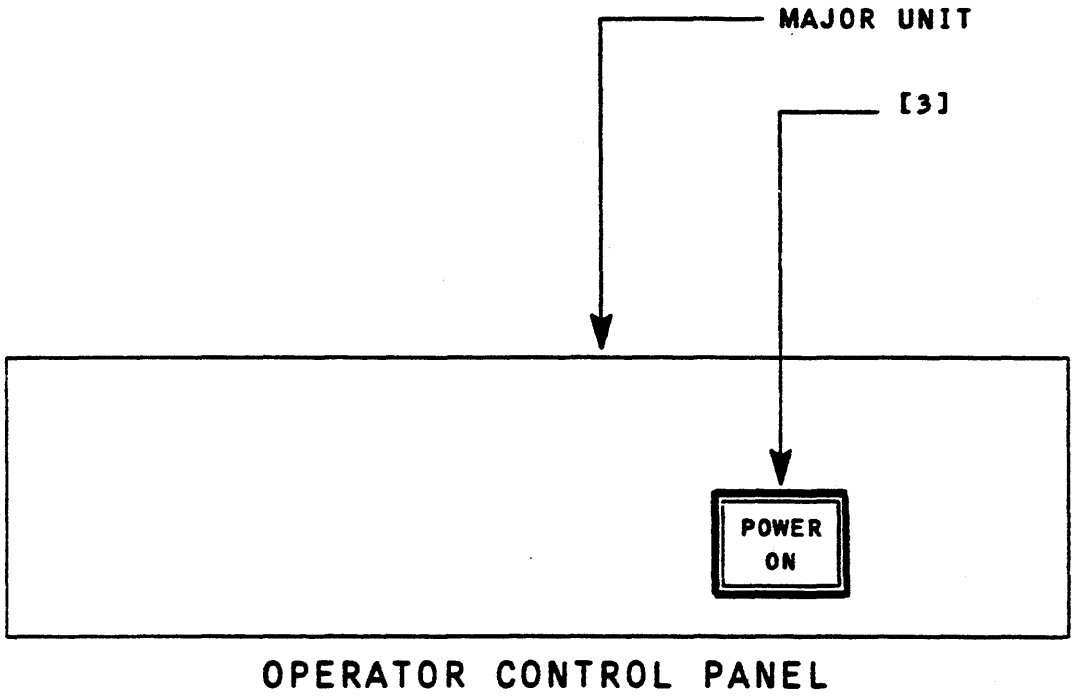

FIGURE X.Y.Z-1. PREPARING EQUIPMENT FOR MAINTENANCE

TABLE 2.0-1. PART NO./MAINT. PROCEDURE CROSS REFERENCE

ORU PART NUMBER	MAINTENANCE PROCEDURE TYPE/PAGE REPLACE	PAGE	ADJUST	PAGE	SERVICE	PAGE
03850085-XXX	2.1	2-24				
43B111736P10	2.24	2-117				
43B111736P7	2.24	2-117				
43B111736P9	2.24	2-117				
43C219871G2	2.25	2-127				
43C219871G7	2.25	2-127				
58009320-XXX	2.28	2-139				
58018520-XXX	2.28	2-139				
58018530-XXX	2.2	2-27				
58020158-XXX	2.27	2-135				
58020278-XXX	2.26	2-131				
58020447-003	2.24	2-117				
58022210-XXX	2.28	2-139				
58032260-XXX	2.2	2-27				
58035820-XXX	2.3	2-31	3.1	3-1		
58035950-XXX	2.4	2-35				
58036080-XXX	2.32	2-154				
58036120-XXX	2.28	2-139				
58037400-XXX	2.2	2-27				
58037400-XXX	2.29	2-143				
58037473-XXX	2.17	2-87				
58037640-XXX	2.4	2-35				
58039449-XXX	2.5	2-39				
58039720-XXX	2.2	2-27				
58039720-XXX	2.29	2-143				
58039780-XXX	2.28	2-139				
58039880-XXX	2.28	2-139				
58041810-XXX	2.29	2-143				
58044050-XXX	2.28	2-139				
58044154-XXX	2.29	2-143				
58044510-XXX	2.4	2-35				
58044550-XXX	2.4	2-35				
58044560-XXX	2.4	2-35				
58044630-XXX	2.4	2-35				
58044690-XXX	2.4	2-35				
58044740-XXX	2.4	2-35				
58044760-XXX	2.4	2-35				
58044770-XXX	2.4	2-35				
58044780-XXX	2.4	2-35				
58044900-XXX	2.29	2-143				
58044940-XXX	2.28	2-139				
58044950-XXX	2.28	2-139				

TABLE 2.0-1 (CONT). PART NO./MAINT. PROCEDURE CROSS REFERENCE

ORU PART NUMBER	MAINTENANCE PROCEDURE TYPE/PAGE REPLACE	PAGE	ADJUST	PAGE	SERVICE	PAGE
58044980-XXX	2.28	2-139				
58046630-XXX	2.28	2-139				
58046650-XXX	2.28	2-139				
58046660-XXX	2.28	2-139				
58046720-XXX	2.28	2-139				
58046740-XXX	2.28	2-139				
58046800-XXX	2.29	2-143				
58046810-XXX	2.29	2-143				
58047150-XXX	2.6	2-43				
58047167-XXX	2.33	2-158				
58047200-XXX	2.7	2-47	3.2	3-5		
58047286-XXX	2.11	2-62				
58048580-XXX	2.34	2-162	3.7	3-24		
58048920-XXX	2.2	2-27				
58048920-XXX	2.29	2-143				
58048950-XXX	2.2	2-27				
58048970-XXX	2.4	2-35				
58051320-XXX	2.28	2-139				
58051330-XXX	2.28	2-139				
58051491-004	2.11	2-62				
58052063-XXX	2.20	2-101				
58052267-XXX	2.14	2-75				
58052618-XXX	2.35	2-166				
58052840-XXX	2.4	2-35				
58052850-XXX	2.4	2-35				
58052860-XXX	2.4	2-35				
58052870-XXX	2.4	2-35				
58052880-XXX	2.4	2-35				
58052890-XXX	2.4	2-35				
58052900-XXX	2.4	2-35				
58052920-XXX	2.4	2-35				
58052930-XXX	2.4	2-35				
58052940-XXX	2.4	2-35				
58052950-XXX	2.4	2-35				
58052980-XXX	2.4	2-35				
58053815-XXX	2.2	2-27				
58053930-XXX	2.4	2-35				
58053940-XXX	2.4	2-35				
58054246-XXX	2.8	2-51				
58055100-XXX	2.28	2-139				
58055410-XXX	2.29	2-143				
58055600-XXX	2.2	2-27				
58056411-XXX	2.2	2-27				

TABLE 2.0-1 (CONT). PART NO./MAINT. PROCEDURE CROSS REFERENCE

ORU PART NUMBER	MAINTENANCE PROCEDURE TYPE/PAGE REPLACE	PAGE	ADJUST	PAGE	SERVICE	PAGE
58056729-XXX	2.9	2-54	3.3	3-9		
58057241-XXX	2.10	2-58				
58057725-XXX	2.11	2-62				
58057895-XXX	2.11	2-62				
58058132-XXX	2.13	2-70				
58058436-XXX	2.12	2-66				
58059029-XXX	2.30	2-147				
58059171-001	2.31	2-151				
58059171-002	2.31	2-151				
58059172-001	2.31	2-151				
58059172-002	2.31	2-151				
58059298-XXX	2.13	2-70				
58059331-XXX	2.14	2-75				
58059404-XXX	2.15	2-79	3.4	3-13		
58059490-XXX	2.6	2-43				
58059500-XXX	2.6	2-43				
58059501-XXX	2.36	2-170				
58059510-XXX	2.6	2-43				
58059633-XXX	2.30	2-147				
58059634-XXX	2.30	2-147				
58059745-XXX	2.16	2-83	3.5	3-16		
58059763-XXX	2.18	2-93				
58059785-XXX	2.19	2-97				
58059801-XXX	2.17	2-87	3.6	3-20		
58060041-XXX	2.20	2-101				
58060088-XXX	2.14	2-75				
58060353-XXX	2.20	2-101				
58060499-XXX	2.17	2-87				
58060513-XXX	2.21	2-105				
58060519-XXX	2.21	2-105				
58060523-XXX	2.21	2-105				
58060783-XXX	2.21	2-105				
58060787-XXX	2.21	2-105				
58060791-XXX	2.21	2-105				
58060810-XXX	2.22	2-109				
58060900-XXX	2.23	2-113				
58063070-XXX	2.2	2-27				
58063120-XXX	2.28	2-139				
58063160-XXX	2.21	2-105				
58063170-XXX	2.21	2-105				
58063180-XXX	2.21	2-105				
58063210-XXX	2.21	2-105				
58064740-XXX	2.4	2-35				
58064750-XXX	2.4	2-35				

TABLE 2.0-1 (CONT). PART NO./MAINT. PROCEDURE CROSS REFERENCE

ORU PART NUMBER	MAINTENANCE PROCEDURE TYPE/PAGE REPLACE	PAGE	ADJUST	PAGE	SERVICE	PAGE
58064760-XXX	2.4	2-35				
58064770-XXX	2.4	2-35				
58064780-XXX	2.28	2-139				
58064830-XXX	2.4	2-35				
58064940-XXX	2.4	2-35				
58065000-XXX	2.2	2-27				
58065010-XXX	2.2	2-27				
58065050-XXX	2.4	2-35				
58065060-XXX	2.4	2-35				
58065100-XXX	2.2	2-27				
58065230-XXX	2.28	2-139				
58065400-XXX	2.2	2-27				
58065410-XXX	2.2	2-27				
58065420-XXX	2.2	2-27				
58065430-XXX	2.28	2-139				
58065440-XXX	2.28	2-139				
58065450-XXX	2.28	2-139				
58065520-XXX	2.4	2-35				
58065530-XXX	2.4	2-35				
58065540-XXX	2.4	2-35				
58065560-XXX	2.4	2-35				
58065570-XXX	2.4	2-35				
58065680-XXX	2.4	2-35				
58065690-XXX	2.4	2-35				
58065740-XXX	2.4	2-35				
58065750-XXX	2.4	2-35				
58065810-XXX	2.4	2-35				
58065900-XXX	2.28	2-139				
58066280-XXX	2.28	2-139				
58066290-XXX	2.28	2-139				
58066310-XXX	2.28	2-139				
58066660-XXX	2.4	2-35				
58066670-XXX	2.4	2-35				
58066690-XXX	2.2	2-27				
58066800-XXX	2.4	2-35				
58066820-XXX	2.2	2-27				
58066919-XXX	2.28	2-139				
58066960-XXX	2.2	2-27				
58066970-XXX	2.2	2-27				
58067010-XXX	2.4	2-35				
58067020-XXX	2.4	2-35				
58067110-XXX	2.4	2-35				
58067120-XXX	2.4	2-35				
58071460-XXX	2.2	2-27				

TABLE 2.0-1 (CONT). PART NO./MAINT. PROCEDURE CROSS REFERENCE

ORU PART NUMBER	MAINTENANCE PROCEDURE TYPE/PAGE REPLACE	PAGE	ADJUST	PAGE	SERVICE	PAGE
58071470-XXX	2.2	2-27				
58071480-XXX	2.2	2-27				
58071490-XXX	2.4	2-35				
58071500-XXX	2.4	2-35				
58071510-XXX	2.4	2-35				
58071520-XXX	2.4	2-35				
58071540-XXX	2.4	2-35				
58071660-XXX	2.2	2-27				
58071690-XXX	2.4	2-35				
58071700-XXX	2.4	2-35				
58071730-XXX	2.4	2-35				
58071760-XXX	2.2	2-27				
58075650-XXX	2.21	2-105				
58075670-XXX	2.4	2-35				
58075720-XXX	2.21	2-105				
58075740-XXX	2.21	2-105				
58075800-XXX	2.4	2-35				
58075810-XXX	2.4	2-35				
58075820-XXX	2.4	2-35				
58075830-XXX	2.21	2-105				
58075890-XXX	2.29	2-143				
58075900-XXX	2.29	2-143				
58075910-XXX	2.29	2-143				
58076180-XXX	2.4	2-35				
58076220-XXX	2.4	2-35				
58076230-XXX	2.4	2-35				
58076270-XXX	2.21	2-105				
58076280-XXX	2.21	2-105				
58076290-XXX	2.21	2-105				
58076300-XXX	2.21	2-105				
58076310-XXX	2.21	2-105				
58076330-XXX	2.21	2-105				
58076340-XXX	2.21	2-105				
58076360-XXX	2.21	2-105				
58076370-XXX	2.21	2-105				
58078190-XXX	2.21	2-105				
58088820-XXX	2.28	2-139				
58088870-XXX	2.29	2-143				
58088880-XXX	2.29	2-143				
58089100-XXX	2.21	2-105				
58089270-XXX	2.2	2-27				
876B216P23	2.24	2-117				
877B293P19	2.24	2-117				
877B293P23	2.24	2-117				

2.0.1 PRELIMINARY MAINTENANCE STEPS

All maintenance procedures share common initial basic procedural steps. The following illustrations provide the user with the information necessary to successfully accomplish these steps, eliminating duplication of graphic illustrations in each procedure.

- Remove power from the cabinet by pressing the POWER OFF switch on the Operator Control Panel.

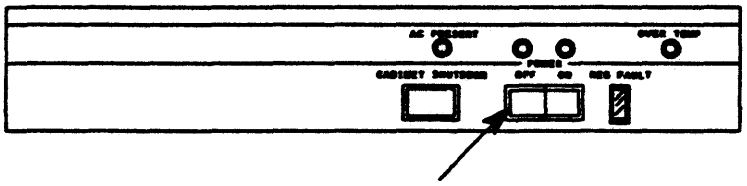

ALL POWER SOURCE CABINETS HAVE SIMILAR OPERATOR CONTROL PANELS.

All power source cabinets have similar Operator Control Panels.

- Using a hex-head wrench, release door latch mechanisms and open doors.

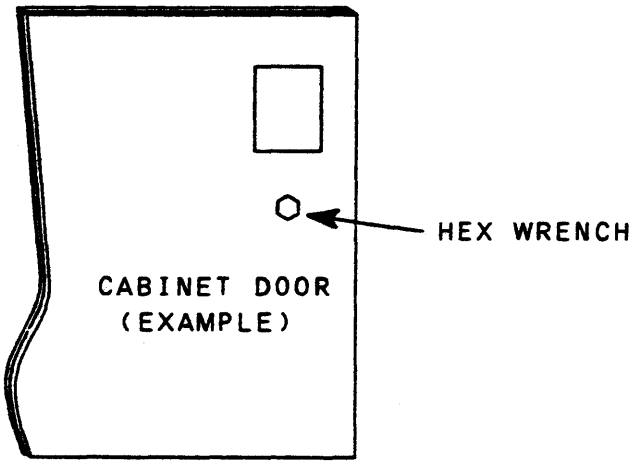

ALL DPS 84 CABINETS HAVE IDENTICAL DOOR LATCH MECHANISMS.

2.0.2 ELECTROSTATIC DISCHARGE

Electrostatic discharge may be damaging to certain static sensitive components; therefore, it is imperative to exercise caution when installing or handling equipment.

Electrostatic discharge jacks have been installed on either the top or side frames in all cabinets which contain static sensitive components.

Sufficient quantities of Electrostatic Discharge Wrists straps (part numbers 58053367-003 and 58053376-001) have been supplied to each site. Assure that each person is properly wearing a grounded wrist strap before handling static sensitive components.

CAUTION

IT IS MANDATORY THAT ALL PERSONNEL WEAR AN ELECTROSTATIC DISCHARGE (ESD) WRIST STRAP WHEN HANDLING ANY STATIC SENSITIVE COMPONENTS SUCH AS CABLE ENDS (PADDLE BOARD CONNECTORS) OR LOGIC BOARDS TO PREVENT STATIC ELECTRICITY DAMAGE TO THESE COMPONENTS. THIS STRAP MUST BE PLUGGED INTO AN ESD SOCKET LOCATED ON THE CABINET FRAME. SEE FIGURE 2.0-1. THIS FRAME MUST BE GROUNDED WITH THE ASSURANCES LISTED BELOW:

1. **ASSURE THAT THE CABINETS ARE PROPERLY JOINED TOGETHER IN ACCORDANCE WITH SECTION 4.4 OF THE DPS 8 INSTALLATION MANUAL (58010048) AND SECTION 4 OF THE SITE PREPARATION MANUAL (DU34).**

2. **ASSURE THAT THE MMU CABINET IS PROPERLY GROUNDED TO SITE EARTH GROUND IN ACCORDANCE WITH SECTION 4.3 OF THE DPS 8 INSTALLATION MANUAL AND SECTION 4 OF THE SITE PREPARATION MANUAL.**

3. **ASSURE THAT WHEN CABINETS ARE NOT BOLTED TOGETHER, EACH CABINET IS PROPERLY GROUNDED TO SITE EARTH GROUND IN ACCORDANCE WITH SECTION 4.3 OF THE DPS 8 INSTALLATION MANUAL AND SECTION 4 OF THE SITE PREPARATION MANUAL.**

ELECTROSTATIC DISCHARGE WRIST STRAP ASM, 58053367, MUST BE CHECKED EVERY 90 DAYS OR SOONER FOR A PROPER RESISTANCE VALUE OF 1 MEGOHM. RESISTANCE SHOULD BE MEASURED BETWEEN THE INSIDE OF THE WRIST BAND AND THE BANNANA PLUG LOCATED AT THE END OF THE CORD.

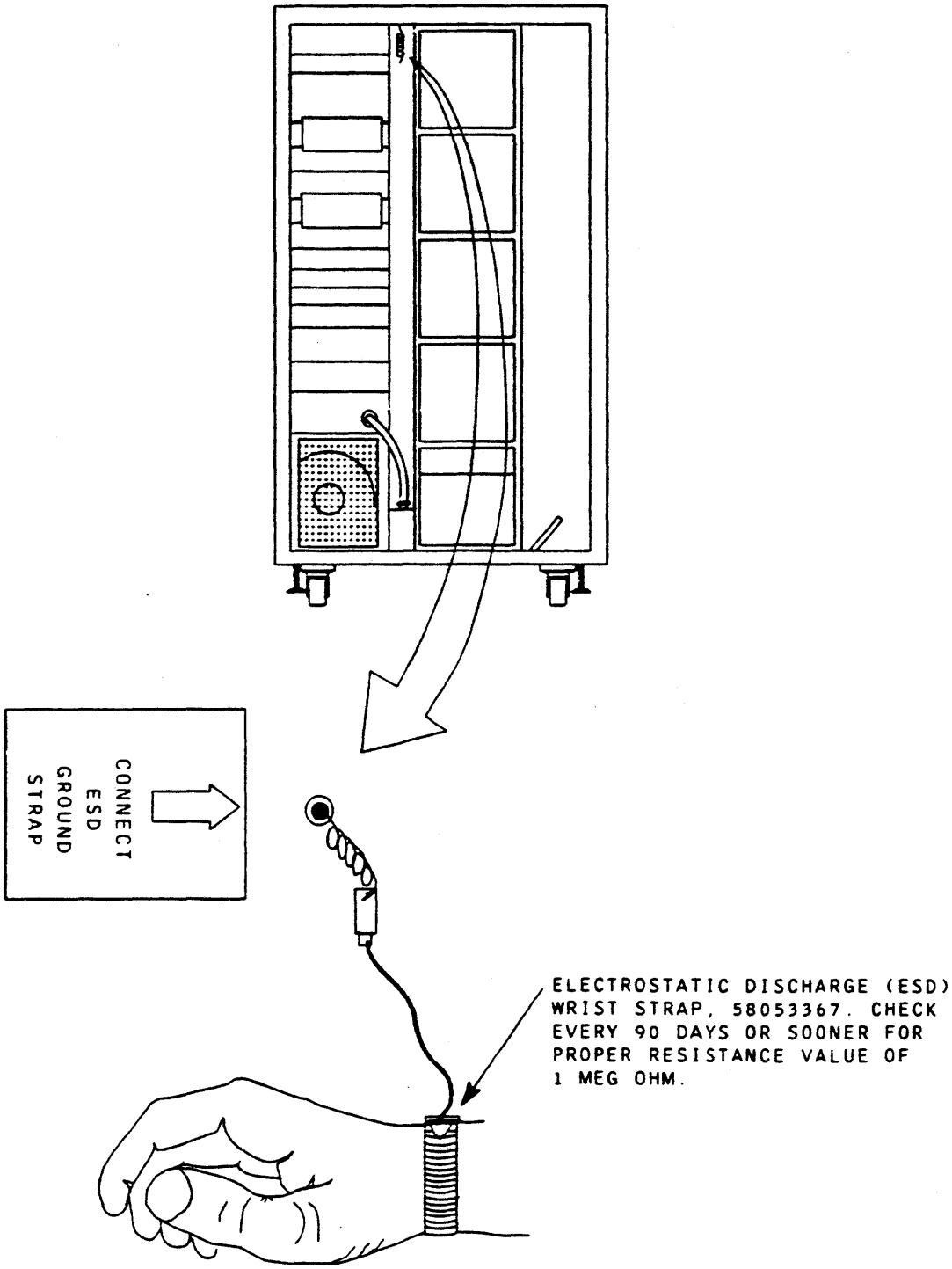

FIGURE 2.0-1. ELECTROSTATIC DISCHARGE WRIST STRAP APPLICATION

- Identify and locate the ORU requiring maintenance. Refer to the applicable cabinet's numeric list and associated figure identifying the ORU location.

CABINET & MODEL NUMBER	ORU NUMERIC LISTING	ORU LOCATION FIGURE
CPU WCPU66LB	TABLE 2.0-2	FIGURE 2.0-2
MSP/ MTP WDAU001A	TABLE 2.0-3	FIGURE 2.0-3
IOM WIOU66LA	TABLE 2.0-4	FIGURE 2.0-4
IMU WII066MA	TABLE 2.0-5	FIGURE 2.0-5
MMU WMMU66LB	TABLE 2.0-6	FIGURE 2.0-6

- Proceed to the Maintenance Procedure identified using the tables outlined above.

TABLE 2.0-2. CPU (WCPU66LB) ORU NUMERIC LISTING

ORU PART NO.	ORU PART NAME	REFERENCE SYMBOL	PROCEDURE NUMBER	PAGE
43C219871G2	OSCILLATOR PCB	NOTE (a)	2.25	2-127
58020158-XXX	AIR PRESSURE SWITCH	[C]	2.27	2-135
58020278-XXX	AIR FILTER ELEMENT	[B]	2.26	2-131
58020447-003	FUSE (PLANAR PWR)	NOTE (b)	2.24	2-117
58035950-XXX	HDUHC PWA EISDA	[M]	2.4	2-35
58037640-XXX	HDUHC PWA 645DL	[M]	2.4	2-35
58039449-XXX	BLOWER ASSEMBLY	[A]	2.5	2-39
58044510-XXX	HDUHC ETCAF	[M]	2.4	2-35
58044550-XXX	HDUHC PWA ETCAN	[M]	2.4	2-35
58044560-XXX	HDUHC PWA ETCAP	[M]	2.4	2-35
58044630-XXX	HDUHC PWA ETCCD	[M]	2.4	2-35
58044690-XXX	HDUHC PWA ETCCU	[M]	2.4	2-35
58044740-XXX	UNIV PWA ETCVE	[M]	2.4	2-35
58044760-XXX	HDUWW PWA ETCVG	[M]	2.4	2-35
58044770-XXX	UNIV BD ASSY ETCVH	[M]	2.4	2-35
58044780-XXX	UNIV PWA ETCVJ	[M]	2.4	2-35
58047167-XXX	DC/DC CONVERTER	NOTE (c)	2.33	2-158
58047200-XXX	VOLT REG. 100W	[G]	2.7	2-47
58048970-XXX	HDUHC PWA ETCMP	[M]	2.4	2-35
58052840-XXX	HDUHC PWA EISDM	[M]	2.4	2-35
58052850-XXX	HDUHC PWA EISDB	[M]	2.4	2-35
58052860-XXX	HDUHC PWA EISDN	[M]	2.4	2-35
58052870-XXX	HDUHC PWA EISDC	[M]	2.4	2-35
58052880-XXX	HDUHC PWA EISDD	[M]	2.4	2-35
58052890-XXX	HDUHC PWA EISDE	[M]	2.4	2-35
58052900-XXX	HDUHC PWA EISDF	[M]	2.4	2-35
58052920-XXX	HDUHC PWA EISDJ	[M]	2.4	2-35
58052930-XXX	HDUHC PWA EISDK	[M]	2.4	2-35
58052940-XXX	HDUHC PWA EISDQ	[M]	2.4	2-35
58052950-XXX	HDUHC PWA EISDR	[M]	2.4	2-35
58052980-XXX	HDUHC PWA ETCDH	[M]	2.4	2-35
58053930-XXX	HDUHC PWA ETCDP	[M]	2.4	2-35
58053940-XXX	HDUHC PWA.ETCDG	[M]	2.4	2-35
58054246-XXX	ACTUATOR MOD	[N]	2.8	2-51
58055100-XXX	HDUHC PWA SCAMX	[M]	2.4	2-35

(a) NOT ILLUSTRATED (LOCATED TOP LEFT REAR BACKPANEL)
(b) NOT ILLUSTRATED (LOCATED WITHIN REAR BUS COMPARTMENT)
(c) NOT ILLUSTRATED (LOCATED LEFT SIDE REAR BACKPANEL)

TABLE 2.0-2 (CONT). CPU (WCPU66LB) ORU NUMERIC LISTING

ORU PART NO.	ORU PART NAME	REFERENCE SYMBOL	PROCEDURE NUMBER	PAGE
58057241-XXX	OPERATOR PANEL (PWB)	NOTE (d)	2.10	2-58
58059171-001	USE TIME METER 60HZ	NOTE (e)	2.31	2-151
58059171-002	USE TIME METER 50HZ	NOTE (e)	2.31	2-151
58059172-001	RUN TIME METER 60HZ	NOTE (e)	2.31	2-151
58059172-002	RUN TIME METER 50HZ	NOTE (e)	2.31	2-151
58059298-XXX	CIRCUIT BREAKER MOD	[D]	2.13	2-70
58059331-XXX	CAPACITOR MOD	[L]	2.14	2-75
58059501-XXX	PWA LP-DR	NOTE (f)	2.36	2-170
58059745-XXX	REG. CONTROL MOD	[H]	2.16	2-83
58059763-XXX	FILTER MOD	[J]	2.18	2-93
58059785-XXX	POWER MOD	[I]	2.19	2-97
58059801-XXX	POWER CONTROL MOD	[F]	2.17	2-87
58060041-XXX	POWER ENTRY MOD	[E]	2.20	2-101
58060088-XXX	CAPACITOR MOD	[K]	2.14	2-75
58060353-XXX	POWER ENTRY MOD	[E]	2.20	2-101
58064740-XXX	HDUHC PWA ETCAJ	[M]	2.4	2-35
58064750-XXX	HDUHC PWA ETCAB	[M]	2.4	2-35
58064760-XXX	HDUHC PWA ETCAE	[M]	2.4	2-35
58064770-XXX	HDUHC PWA ETCAM	[M]	2.4	2-35
58064830-XXX	HDUHC PWA ETCAD	[M]	2.4	2-35
58064940-XXX	HDUHC PWA ETCCY	[M]	2.4	2-35
58065050-XXX	HDUWW PWA ETCVK	[M]	2.4	2-35
58065060-XXX	HDUWW PWA ETCVL	[M]	2.4	2-35
58065520-XXX	HDUHC PWA ETHVA	[M]	2.4	2-35
58065530-XXX	HDUHC PWA ETHVB	[M]	2.4	2-35
58065540-XXX	HDUHC PWA ETCVF	[M]	2.4	2-35
58065560-XXX	HDUHC PWA ETXBB	[M]	2.4	2-35
58065570-XXX	HDUHC PWA ETXCC	[M]	2.4	2-35
58065670-XXX	HDUHC PWA ETCCG	[M]	2.4	2-35
58065680-XXX	HDUHC PWA ETCCQ	[M]	2.4	2-35
58065690-XXX	HDUHC PWA ETCCZ	[M]	2.4	2-35
58065740-XXX	HDUHC PWA ETXBG	[M]	2.4	2-35
58065750-XXX	HDUHC PWA ETXBA	[M]	2.4	2-35
58065810-XXX	HDUWW PWA ETXCM	[M]	2.4	2-35
58066660-XXX	HDUHC PWA ETXCH	[M]	2.4	2-35
58066670-XXX	HDUHC PWA ETXCP	[M]	2.4	2-35
58066800-XXX	HDUHC PWA ETCAK	[M]	2.4	2-35
58067010-XXX	HDUHC PWA X52CC	[M]	2.4	2-35

(d) NOT ILLUSTRATED (LOCATED WITHIN FRONT DOOR CONTROL PANEL COMPARTMENT)
(e) NOT INCLUDED IN THIS DOCUMENT REVISION
(f) NOT ILLUSTRATED (LOCATED ABOVE OPERATOR CONTROL PANEL)

TABLE 2.0-2 (CONT). CPU (WCPU66LB) ORU NUMERIC LISTING

ORU PART NO.	ORU PART NAME	REFERENCE SYMBOL	PROCEDURE NUMBER	PAGE
58067020-XXX	HDUWW PWA X52CM	[M]	2.4	2-35
58067110-XXX	HDUWW PWA X46CM	[M]	2.4	2-35
58067120-XXX	HDUWW PWA X62CM	[M]	2.4	2-35
58071490-XXX	HDUHC PWA ETCVE	[M]	2.4	2-35
58071500-XXX	HDUHC PWA ETCVG	[M]	2.4	2-35
58071510-XXX	HDUHC PWA ETCVH	[M]	2.4	2-35
58071520-XXX	HDUHC PWA ETCVJ	[M]	2.4	2-35
58071540-XXX	HDUHC PWA ETXBH	[M]	2.4	2-35
58071690-XXX	HDUHC PWA ETCVK	[M]	2.4	2-35
58071700-XXX	HDUHC PWA ETCVL	[M]	2.4	2-35
58071730-XXX	HDUHC PWA ETXBD	[M]	2.4	2-35
58075670-XXX	HDUHC PWA ETXCM	[M]	2.4	2-35
58075800-XXX	HDUHC PWA X46CM	[M]	2.4	2-35
58075810-XXX	HDUHC PWA X52CM	[M]	2.4	2-35
58075820-XXX	HDUHC PWA X62CM	[M]	2.4	2-35
58076180-XXX	HDUHC PWA ETWCX	[M]	2.4	2-35
58076220-XXX	HDUHC PWA ETWVC	[M]	2.4	2-35
58076230-XXX	HDUHC PWA ETWVD	[M]	2.4	2-35
877B293P19	FUSE	NOTE (f)	2.24	2-117
877B293P19	FUSE	NOTE (g)	2.24	2-117
877B293P23	FUSE SLO-BLO	NOTE (g)	2.24	2-117

(f) NOT ILLUSTRATED (LOCATED WITHIN VOLT. REG. MOD. 58047200)
(g) NOT ILLUSTRATED (LOCATED WITHIN PWR ENTRY MOD 58060041 AND 58060353)

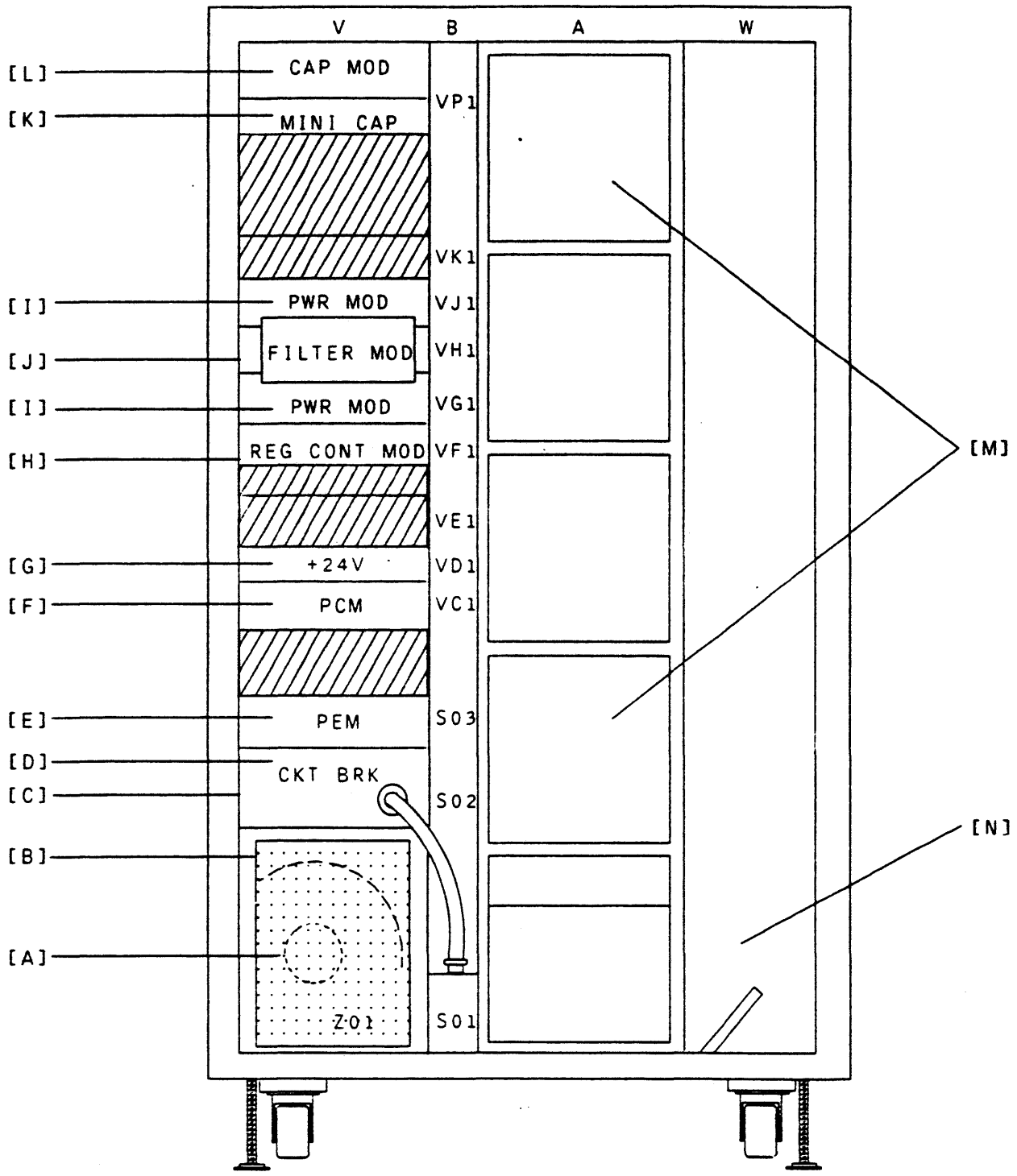

FIGURE 2.0-2. CPU (WCPU66LB) ORU LOCATION

TABLE 2.0-3. FREESTANDING MSP/MTP (WDAU001A/B) ORU NUMERIC LISTING

ORU PART NO.	ORU PART NAME	REFERENCE SYMBOL	PROCEDURE NUMBER	PAGE
58020158-XXX	AIR PRESSURE SWITCH	[C]	2.27	2-135
58020278-XXX	AIR FILTER ELEMENT	[B]	2.26	2-131
58020447-003	FUSE (PLANAR PWR)	NOTE (a)	2.24	2-117
58037400-XXX	HDUHC PWA DURIM	[M]	2.29	2-143
58039449-XXX	BLOWER ASSEMBLY	[A]	2.5	2-39
58039720-XXX	HDUHC PWA DURRO	[M]	2.29	2-143
58041810-XXX	HDUHC PWA MPCCM	[M]	2.29	2-143
58044154-XXX	HDUHC PWA MPCME-7	[M]	2.29	2-143
58044900-XXX	HDUHC PWA DURMX	[M]	2.29	2-143
58046760-XXX	HDUHC PWA MT8PS	[M]	2.29	2-143
58046800-XXX	HDUHC PWA MPCDI	[M]	2.29	2-143
58046810-XXX	HDUHC PWA UPCRA	[M]	2.29	2-143
58047200-XXX	VOLT REG 100W (+24V)	[G]	2.7	2-47
58048920-XXX	HDUHC PWA MPCFN	[M]	2.29	2-143
58054246-XXX	ACTUATOR MOD	[N]	2.8	2-51
58055410-XXX	HDUHC PWA MPCLX	[M]	2.29	2-143
58055600-XXX	HDUHC PWA MPCNA	[M]	2.29	2-143
58056411-XXX	HDUHC PWA MPCNE	[M]	2.29	2-143
58057241-XXX	OPERATOR PANEL (PWB)	NOTE (b)	2.10	2-58
58059298-XXX	CIRCUIT BREAKER MOD	[D]	2.13	2-70
58059331-XXX	CAPACITOR MOD	[L]	2.14	2-75
58059633-XXX	DAU CONFIG PANEL	NOTE (c)	2.30	2-147
58059634-XXX	DAU PANEL ASSY	NOTE (c)	2.30	2-147
58059745-XXX	REG. CONTROL MOD	[H]	2.16	2-83
58059763-XXX	FILTER MOD	[J]	2.18	2-93
58059785-XXX	POWER MOD	[I]	2.19	2-97
58059801-XXX	POWER CONTROL MOD	[F]	2.17	2-87
58060041-XXX	POWER ENTRY MOD	[E]	2.20	2-101
58060088-XXX	CAPACITOR MOD	[K]	2.14	2-75
58060353-XXX	POWER ENTRY MOD	[E]	2.20	2-101
58063070-XXX	HDUHC PWA MT8RA	[M]	2.29	2-143
58066390-XXX	HDUHC PWA MT8MT	[M]	2.29	2-143
58066690-XXX	HDUHC PWA MT83A	[M]	2.29	2-143
58066960-XXX	HDUHC PWA MT8CB	[M]	2.29	2-143
58066970-XXX	HDUHC PWA MT8RC	[M]	2.29	2-143
58071460-XXX	HDUHC PWA MT8AC	[M]	2.29	2-143

(a) NOT ILLUSTRATED (LOCATED WITHIN REAR BUS COMPARTMENT)
(b) NOT ILLUSTRATED (LOCATED WITHIN FRONT DOOR CONTROL PANEL COMPARTMENT)
(c) NOT ILLUSTRATED (LOCATED WITHIN FRONT DOOR ASSEMBLIES)

TABLE 2.0-3. (CONT). FREESTANDING MSP/MTP (WDAU001A/B) ORU NUMERIC LISTING

ORU PART NO.	ORU PART NAME	REFERENCE SYMBOL	PROCEDURE NUMBER	PAGE
58071470-XXX	HDUHC PWA MT8FX	[M]	2.29	2-143
58071480-XXX	HDUHC PWA MT8WD	[M]	2.29	2-143
58071760-XXX	HDUHC PWA MT8BH	[M]	2.29	2-143
58075890-XXX	HDUHC PWA MDAMP	[M]	2.29	2-143
58075900-XXX	HDUHC PWA WDASE	[M]	2.29	2-143
58075910-XXX	HDUHC PWA WDAEI	[M]	2.29	2-143
58088870-XXX	HDUHC PWA WDAEI	[M]	2.29	2-143
58088880-XXX	HDUHC PWA WDACI	[M]	2.29	2-143
58089270-XXX	HDUHC PWA MT8PB	[M]	2.29	2-143
58089530-XXX	HDUHC PWA MT8ER	[M]	2.29	2-143
58089540-XXX	HDUHC PWA MT8SB	[M]	2.29	2-143
876B216P23	FUSE	NOTE (d)	2.24	2-117
877B293P19	FUSE	NOTE (e)	2.24	2-117
877B293P23	FUSE SLO-BLO	NOTE (e)	2.24	2-117

(d) NOT ILLUSTRATED (LOCATED WITHIN VOLT. REG. MOD 58047200)
(e) NOT ILLUSTRATED (LOCATED WITHIN PWR ENTRY MOD 58060041 AND 58060353)

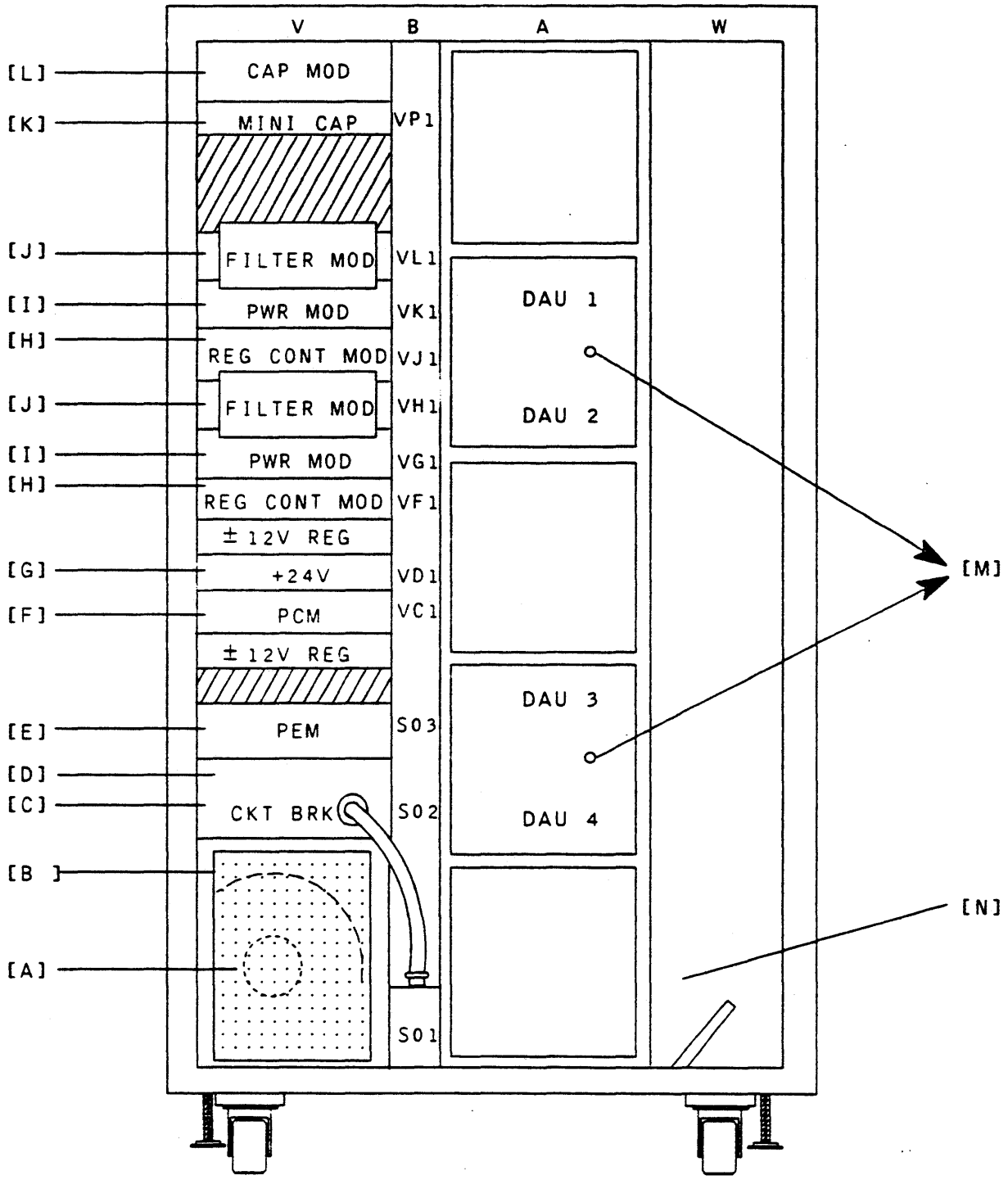

FIGURE 2.0-3. MSP/MTP (WDAU001A) ORU LOCATION (FREESTANDING)

TABLE 2.0-4. IOM (WIOU66LA) ORU NUMERIC LISTING

ORU PART NO.	ORU PART NAME	REFERENCE SYMBOL	PROCEDURE NUMBER	PAGE
43B111736P7	FUSE	NOTE (a)	2.24	2-117
43B111736P9	FUSE	NOTE (b)	2.24	2-117
43B111736P10	FUSE	NOTE (c)	2.24	2-117
58009320-XXX	WWB NSAIB	[L]	2.28	2-139
58018520-XXX	HDUHC PWA SCUMX	[L]	2.28	2-139
58020158-XXX	AIR PRESSURE SWITCH	[C]	2.27	2-135
58020278-XXX	AIR FILTER ELEMENT	[B]	2.26	2-131
58022210-XXX	HDUHC PWA NSAJB, JC	[L]	2.28	2-139
58036080-XXX	CONVERTER REG	[I]	2.32	2-154
58036120-XXX	HDUHC PWA NSAMY	[L]	2.28	2-139
58037473-XXX	POWER CONTROL MOD	[G]	2.17	2-87
58039449-XXX	BLOWER ASSEMBLY	[A]	2.5	2-39
58039780-XXX	HDUHC PWA NSAIC	[L]	2.28	2-139
58039880-XXX	HDUHC PWA NSAJP	[L]	2.28	2-139
58044050-XXX	HC NSBIM	[L]	2.28	2-139
58044940-XXX	HC NSAIG	[L]	2.28	2-120
58044950-XXX	HDUHC PWA MQXIN	[L]	2.28	2-139
58044980-XXX	HDUHC PWA 645ID	[L]	2.28	2-139
58046630-XXX	HDUHC PWA MQXIU	[L]	2.28	2-139
58046650-XXX	HDUHC PWA NSAIP	[L]	2.28	2-139
58046660-XXX	HDUHC PWA NSAIE	[L]	2.28	2-139
58046720-XXX	HDUHC PWA MQXJR	[L]	2.28	2-139
58046740-XXX	HDUHC PWA 645JK	[L]	2.28	2-139
58047150-XXX	PWA BPTRM	NOTE (d)	2.6	2-43
58047167-XXX	DC/DC CONVERTER	NOTE (e)	2.33	2-158
58047200-XXX	VOLT REG 100W.	[H]	2.7	2-47
58047286-XXX	PCM PWB ASSY (A1)	NOTE (f)	2.11	2-62
58048580-XXX	POWER REG	[J]	2.34	2-162
58051320-XXX	HDUHC PWA MQXJK	[L]	2.28	2-139
58051330-XXX	HDUHC PWA NSBJM	[L]	2.28	2-139
58051491-004	PCM PWB ASSY (A2)	NOTE (f)	2.11	2-62
58052063-XXX	POWER ENTRY MOD	[E]	2.20	2-101
58052267-XXX	CAPACITOR MOD	[K]	2.14	2-75
58052618-XXX	SOFT START MODULE	[F]	2.35	2-166
58054246-XXX	ACTUATOR MOD	[M]	2.8	2-51
58055100-XXX	HDUHC PWA SCAMX	[L]	2.28	2-139

(a) LOCATED WITHIN ITEM [F] - SOFT START MOD 58052618
(b) LOCATED WITHIN ITEM [J] - PWR REG 58048580
(c) LOCATED WITHIN ITEM [K] - CAP MOD 58052267
(d) LOCATED ON BACKPANEL
(e) NOT ILLUSTRATED (LOCATED LEFT SIDE REAR BACKPANEL)
(f) NOT ILLUSTRATED (LOCATED WITHIN POWER CONTROL MOD)

TABLE 2.0-4 (CONT). IOM (WIOU66LA) ORU NUMERIC LISTING

ORU PART NO.	ORU PART NAME	REFERENCE SYMBOL	PROCEDURE NUMBER	PAGE
58058132-XXX	CIRCUIT BREAKER MOD	[C]	2.13	2-70
58059029-XXX	CONFIG PANEL ASSY IOM	NOTE (g)	2.30	2-147
58063120-XXX	HDUHC PWA NSCIK	[L]	2.28	2-139
58064780-XXX	HDUHC PWA NSAIB	[L]	2.28	2-139
58065230-XXX	WWB NSDIA	[L]	2.28	2-139
58065430-XXX	HDUHC PWA DMPIF	[L]	2.28	2-139
58065440-XXX	HDUHC PWA DMPIH	[L]	2.28	2-139
58065450-XXX	HDUHC PWA DMPIJ	[L]	2.28	2-139
58065900-XXX	HDUHC PWA EURCB	[L]	2.28	2-139
58066280-XXX	HDUHC PWA 645JF	[L]	2.28	2-139
58066290-XXX	HDUHC PWA 645JG	[L]	2.28	2-139
58066310-XXX	HDUHC PWA 645JQ	[L]	2.28	2-139
58066919-XXX	HDUHC PWA NSDIA	[L]	2.28	2-139
58088820-XXX	HDUHC PWA MQXJT	[L]	2.28	2-139
876B216P23	FUSE	NOTE (h)	2.24	2-117
877B293P19	FUSE	NOTE (i)	2.24	2-117

(g) NOT ILLUSTRATED (LOCATED IN FRONT DOOR ASSEMBLY)
(h) NOT ILLUSTRATED (LOCATED WITHIN VOLT. REG. MOD 58047200)
(i) NOT ILLUSTRATED (LOCATED WITHIN PWR ENTRY MOD 58052063)

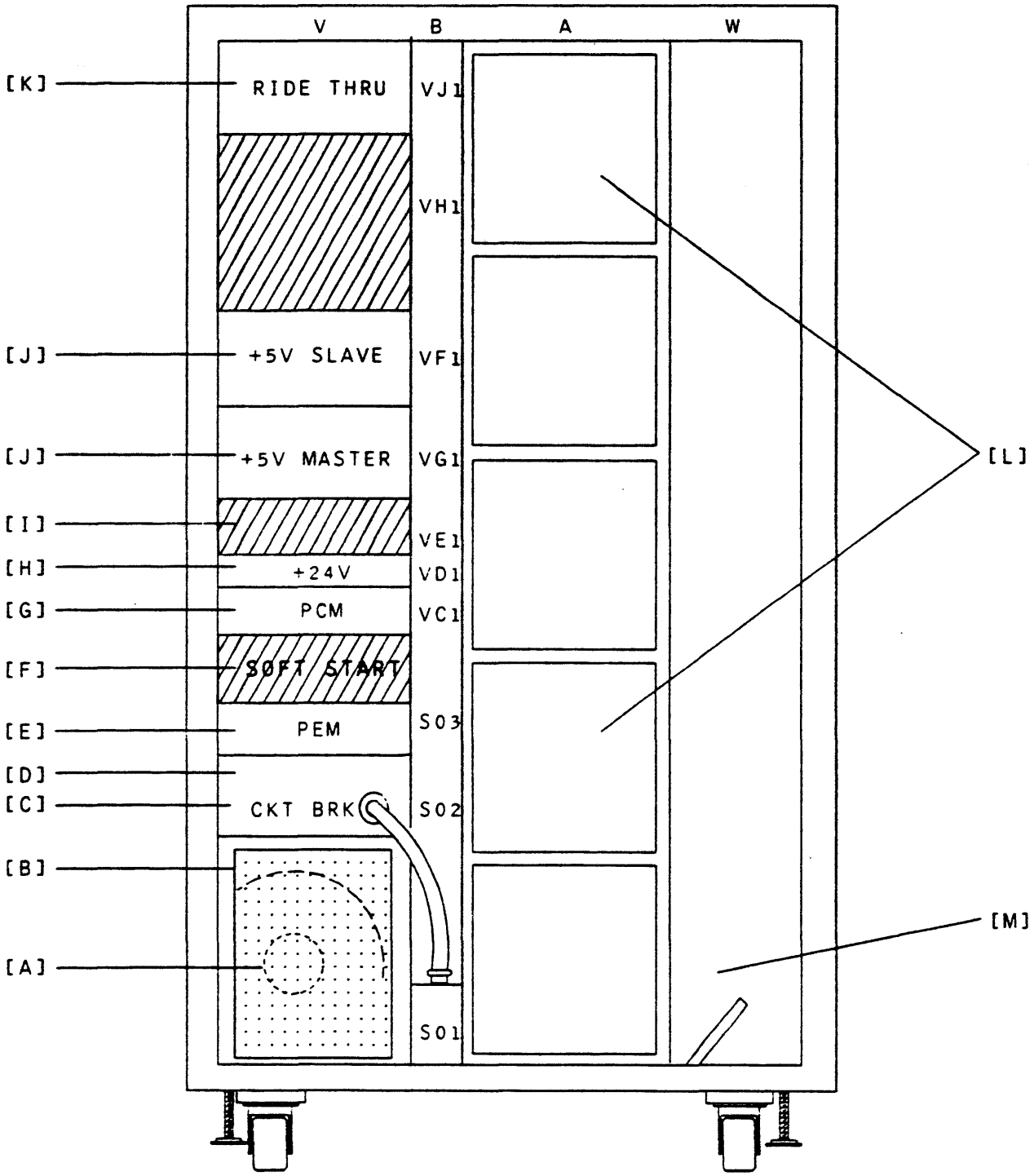

FIGURE 2.0-4. IOM (WIOU66LA) ORU LOCATION

TABLE 2.0-5. IMU (WII066MA/84MA) ORU NUMERIC LISTING

ORU PART NO.	ORU PART NAME	REFERENCE SYMBOL	PROCEDURE NUMBER	PAGE
03850085-XXX	FLEXIBLE DISK DRIVE	NOTE (a)	2.1	2-24
58020158-XXX	AIR PRESSURE SWITCH	[C]	2.27	2-135
58020278-XXX	AIR FILTER ELEMENT	[B]	2.26	2-131
58020447-003	FUSE (PLANAR PWR)	NOTE (b)	2.24	2-117
58039449-XXX	BLOWER ASSEMBLY	[A]	2.5	2-39
58047200-XXX	VOLT REG 100W (+12V)	[I]	2.7	2-47
58047200-XXX	VOLT REG 100W (+24V)	[H]	2.7	2-47
58054246-XXX	UNIT ACTUATOR	[P]	2.8	2-51
58056729-XXX	VOLTAGE MONITOR PWB	NOTE (c)	2.9	2-54
58057241-XXX	OPERATOR PANEL (PWB)	NOTE (a)	2.10	2-58
58057725-XXX	PWA ADP (A1)	NOTE (d)	2.11	2-62
58057895-XXX	PWB ASM (A2)	NOTE (d)	2.11	2-62
58059298-XXX	CIRCUIT BREAKER MOD	[D]	2.13	2-70
58059331-XXX	CAPACITOR MOD	[N]	2.14	2-75
58059480-XXX	PWA (TERMINATION)	NOTE (e)	2.6	2-43
58059490-XXX	PWA (TERMINATION)	NOTE (e)	2.6	2-43
58059500-XXX	PWA (TERMINATION)	NOTE (e)	2.6	2-43
58059510-XXX	PWA (TERMINATION)	NOTE (e)	2.6	2-43
58059745-XXX	REG. CONTROL MOD	[J]	2.16	2-83
58059763-XXX	FILTER MOD	[L]	2.18	2-93
58059785-XXX	POWER MOD	[K]	2.19	2-97
58060088-XXX	CAPACITOR MOD	[M]	2.14	2-69
58060353-XXX	POWER ENTRY MOD	[E]	2.20	2-101
58060499-XXX	POWER CONTROL MOD	[G]	2.17	2-87
58060513-XXX	FUNC PWA WXGKA-1	[O]	2.21	2-105
58060519-XXX	FUNC PWA WXGDA-1	[O]	2.21	2-105
58060523-XXX	FUNC PWA WXGDB-1	[O]	2.21	2-105
58060787-XXX	FUNC PWA WXGSA-1	[O]	2.21	2-105
58060791-XXX	FUNC PWA WXGSC-1	[O]	2.21	2-105
58060810-XXX	CHANNEL CLK DIST. PWB	NOTE (e)	2.22	2-109
58060900-XXX	FIPS POWER SEQUENCER	[F]	2.23	2-113
58063160-XXX	PWA WXGSD	[O]	2.21	2-105
58063170-XXX	PWA WXCCD	[O]	2.21	2-105
58063180-XXX	PWA WXCCE	[O]	2.21	2-105
58063210-XXX	PWA WXGSB	[O]	2.21	2-105

(a) NOT ILLUSTRATED (LOCATED WITHIN FRONT DOOR CONTROL PANEL)
(b) NOT ILLUSTRATED (LOCATED WITHIN REAR BUS COMPARTMENT AND CAPACITOR MODULE 58059931)
(c) LOCATED REAR (TOP RIGHT) CORNER OF CABINET
(d) NOT ILLUSTRATED (LOCATED WITHIN POWER CONTROL MOD 58060499)
(e) LOCATED ON BACKPANEL AT REAR OF CABINET

TABLE 2.0-5 (CONT). IMU (WII066MA/84MA) ORU NUMERIC LISTING

ORU PART NO.	ORU PART NAME	REFERENCE SYMBOL	PROCEDURE NUMBER	PAGE
58075650-XXX	PWA WXGJA	[0]	2.21	2-105
58075720-XXX	PWA WXGJC	[0]	2.21	2-105
58075740-XXX	PWA WXGJB	[0]	2.21	2-105
58075830-XXX	PWA WXGJD	[0]	2.21	2-105
58076270-XXX	PWA WXCCA	[0]	2.21	2-105
58076280-XXX	PWA WXCCC	[0]	2.21	2-105
58076290-XXX	PWA WXCAB	[0]	2.21	2-105
58076300-XXX	PWA WXCAA	[0]	2.21	2-105
58076310-XXX	PWA WXCPD	[0]	2.21	2-105
58076330-XXX	PWA WXCPC	[0]	2.21	2-105
58076340-XXX	PWA WXCPB	[0]	2.21	2-105
58076360-XXX	PWA WXCDA	[0]	2.21	2-105
58076370-XXX	PWA WXCMB	[0]	2.21	2-105
58078190-XXX	PWA WXGGA	[0]	2.21	2-105
58081320-XXX	PWA WXCMC-1	[0]	2.21	2-105
58089010-XXX	PWA WXCMC	[0]	2.21	2-105
58089100-XXX	PWA WXCPE	[0]	2.21	2-105
876B216P23	FUSE	NOTE (e)	2.24	2-117
877B293P19	FUSE	NOTE (f)	2.24	2-117
877B293P23	FUSE SLO-BLO	NOTE (f)	2.24	2-117

(e) NOT ILLUSTRATED (LOCATED WITHIN VOLT. REG. MOD 58047200)
(f) NOT ILLUSTRATED (LOCATED WITHIN PWR ENTRY MOD 58060353)

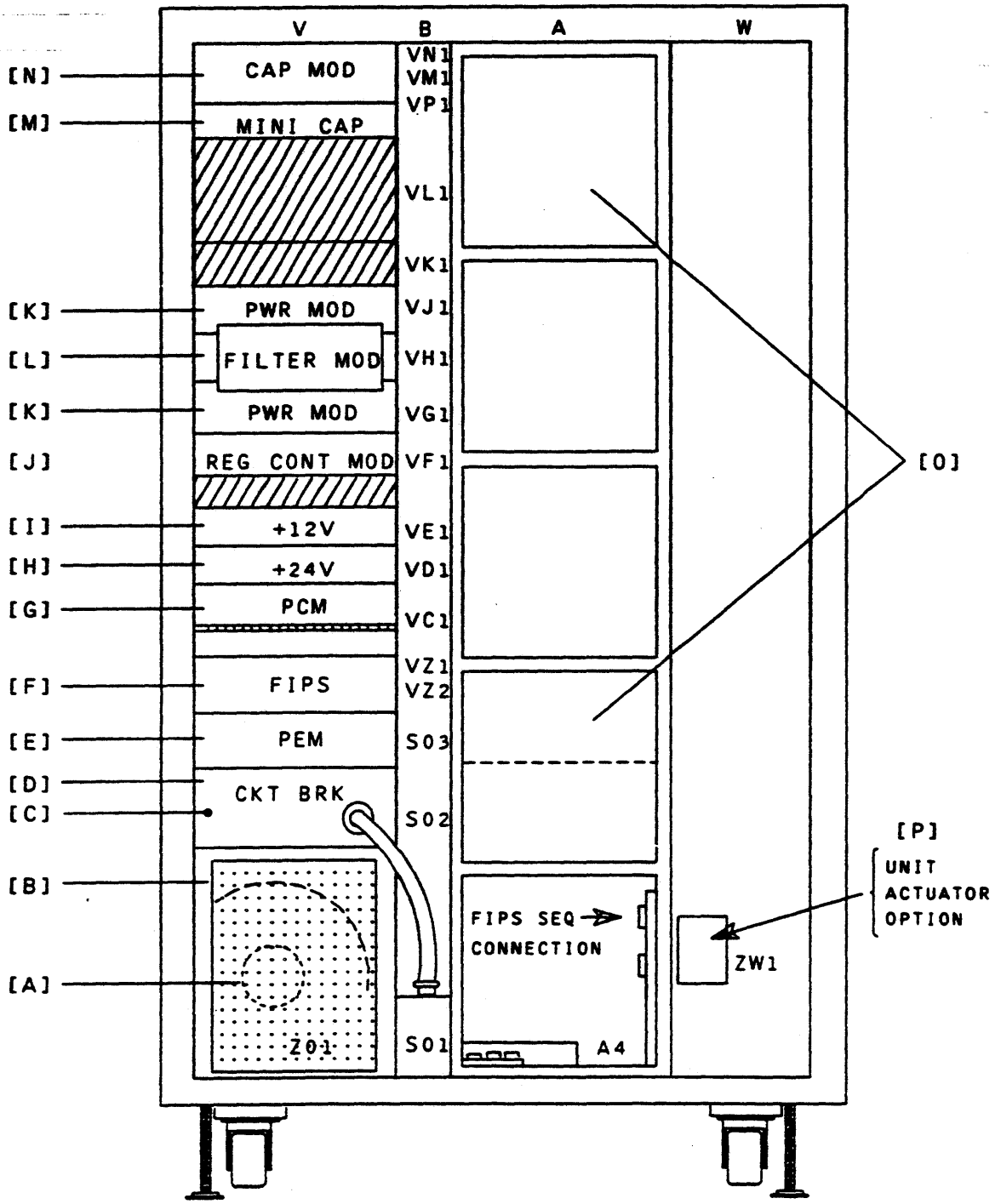

FIGURE 2.0-5. IMU (WI1066MA/84MA) ORU LOCATION

TABLE 2.0-6. MMU (WMMU66LB) ORU NUMERIC LISTING

ORU PART NO.	ORU PART NAME	REFERENCE SYMBOL	PROCEDURE NUMBER	PAGE
43C219871G7	PWA ASSY	NOTE (a)	2.25	2-127
58018530-XXX	HDUHC PWA SCUMY (SCU)	[N]	2.2	2-27
58020158-XXX	AIR PRESSURE SWITCH	[C]	2.27	2-135
58020278-XXX	AIR FILTER ELEMENT	[B]	2.26	2-131
58020447-003	FUSE (PLANAR PWR)	NOTE (b)	2.24	2-117
58032260-XXX	HDUHC PWA ML2DD (MMU)	[N]	2.2	2-27
58035820-XXX	+12V REG.	[H]	2.3	2-31
58037400-XXX	HDUHC PWA DURIM	[N]	2.2	2-27
58039449-XXX	BLOWER ASSEMBLY	[A]	2.5	2-39
58039720-XXX	H.C. DURRO	[N]	2.2	2-27
58047150-XXX	PWA (TERMINATION)	NOTE (c)	2.6	2-43
58047200-XXX	VOLT REG 100W (24V)	[G]	2.7	2-47
58048920-XXX	HDUHC PWA MPCFN	[N]	2.2	2-27
58048950-XXX	HDUHC PWA SCUMK (SCU)	[N]	2.2	2-27
58053815-XXX	HDUHC PWA M64DP1(MMU)	[N]	2.2	2-27
58055600-XXX	HDUHC PWA MPCNA	[N]	2.2	2-27
58056411-XXX	PWB ASSY MPCNE	[N]	2.2	2-27
58057241-XXX	OPERATOR PANEL (PWB)	NOTE (d)	2.10	2-58
58058436-XXX	OSCILLATOR BOARD	NOTE (c)	2.12	2-66
58059298-XXX	CIRCUIT BREAKER MOD	[D]	2.13	2-70
58059331-XXX	CAPACITOR MOD	[M]	2.14	2-75
58059404-XXX	OSCILLATOR PWB	NOTE (c)	2.15	2-79
58059745-XXX	REG. CONTROL MOD	[I]	2.16	2-83
58059763-XXX	FILTER MOD	[K]	2.18	2-93
58059785-XXX	POWER MOD	[J]	2.19	2-97
58059801-XXX	POWER CONTROL MOD	[F]	2.17	2-87
58060088-XXX	CAPACITOR MOD	[L]	2.14	2-75
58060353-XXX	POWER ENTRY MOD	[E]	2.20	2-101
58063070-XXX	HDUHC PWA MT8RA	[N]	2.2	2-27
58065000-XXX	HDUHC PWA SCAMJ (SCU)	[N]	2.2	2-27
58065010-XXX	HDUHC PWA SCAMN (SCU)	[N]	2.2	2-27
58065100-XXX	HDUHC PWA SCAMX (SCU)	[N]	2.2	2-27
58065400-XXX	HDUHC PWA SCAMC (SCU)	[N]	2.2	2-27
58065410-XXX	HDUHC PWA SCAME (SCU)	[N]	2.2	2-27
58065420-XXX	HDUHC PWA SCAMF (SCU)	[N]	2.2	2-27
58066690-XXX	HDUHC PWA MT83A	[N]	2.2	2-27

(a) NOT ILLUSTRATED (LOCATED UPPER LEFT REAR BACKPANEL)
(b) NOT ILLUSTRATED (LOCATED WITHIN REAR BUS COMPARTMENT AND CAPACITOR MODULE 58059931)
(c) NOT ILLUSTRATED (LOCATED REAR BACKPANEL)
(d) NOT ILLUSTRATED (LOCATED WITHIN FRONT DOOR CONTROL PANEL)

TABLE 2.0-6 (CONT). MMU (WMMU66LB) ORU NUMERIC LISTING

ORU PART NO.	ORU PART NAME	REFERENCE SYMBOL	PROCEDURE NUMBER	PAGE
58066820-XXX	HDUHC PWA SCUMH (SCU)	[N]	2.2	2-27
58066960-XXX	HDUHC PWA MT8CB	[N]	2.2	2-27
58066970-XXX	HDUHC PWA MT8RC	[N]	2.2	2-27
58071460-XXX	HDUHC PWA MT8AC	[N]	2.2	2-27
58071470-XXX	HDUHC PWA MT8FX	[N]	2.2	2-27
58071480-XXX	HDUHC PWA MT8WD	[N]	2.2	2-27
58071660-XXX	HDUHC PWA ML2RP (MMU)	[N]	2.2	2-27
58071760-XXX	HDUHC PWA MT8BH	[N]	2.2	2-27
58089270-XXX	HDUHC PWA MT8PB	[N]	2.2	2-27
876B216P23	FUSE	NOTE (e)	2.24	2-117
877B293P19	FUSE	NOTE (f)	2.24	2-117
877B293P23	FUSE SLO-BLO	NOTE (f)	2.24	2-117

(e) NOT ILLUSTRATED (LOCATED WITHIN VOLT. REG. MOD 58047200)
(f) NOT ILLUSTRATED (LOCATED WITHIN PWR ENTRY MOD 58060353)

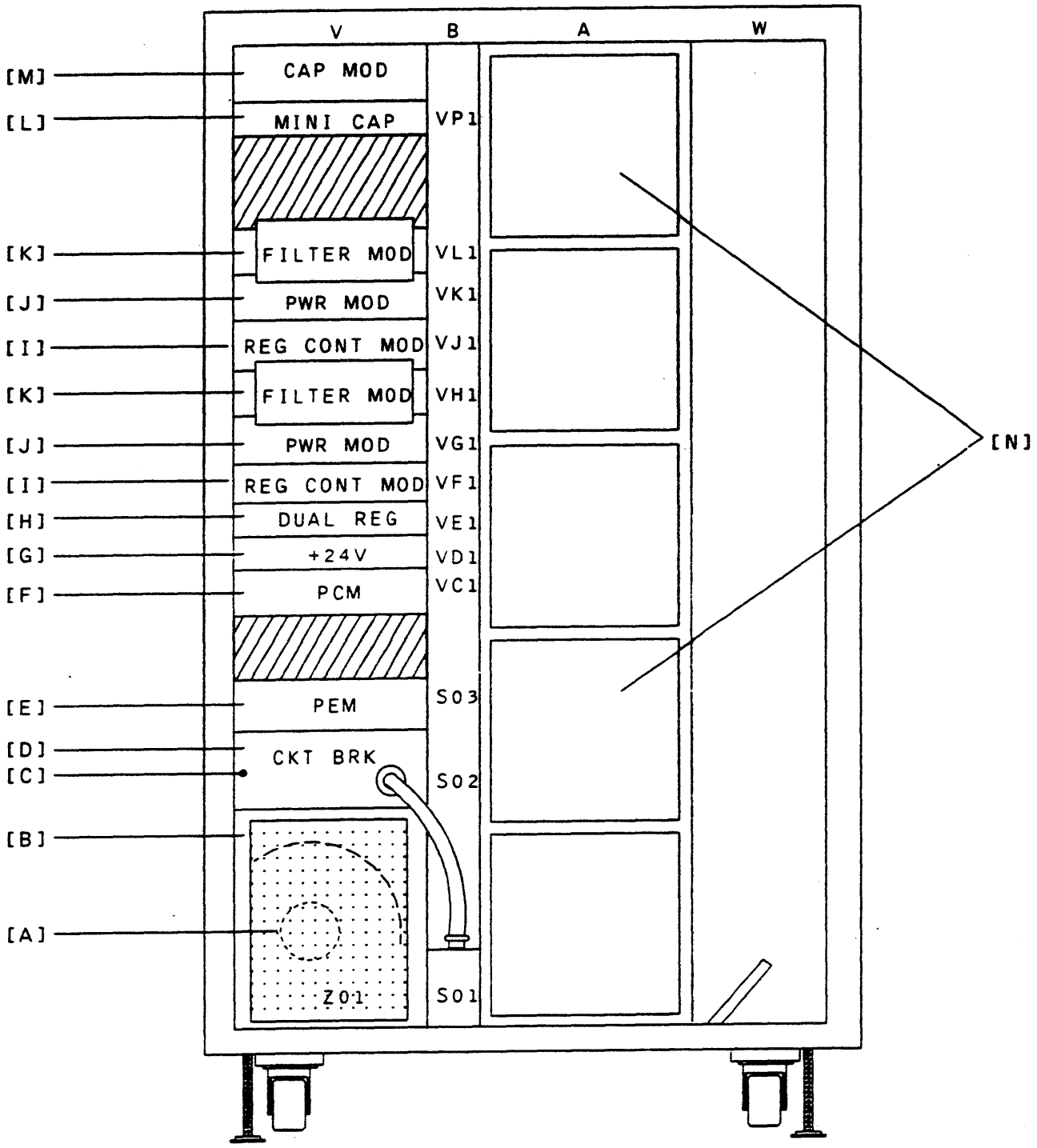

FIGURE 2.0-6. MMU (WMMU66LB) ORU LOCATION

PROCEDURE 2.1

PURPOSE: This routine describes the removal and installation of Diskette Drive Unit

PART NUMBER: 03850085-xxx

REQUIRED TOOLS

Cross-tip screwdriver
Hex-head wrench (4mm)

REQUIRED TEST EQUIPMENT/MATERIALS

Maintenance Procedure 4.1 -	Isolating/Releasing System Resources
Maintenance Procedure 4.3 -	Assigning System Resources

PRECAUTIONS: Strict compliance with all cautions and warnings is required to preclude injury and/or equipment damage.

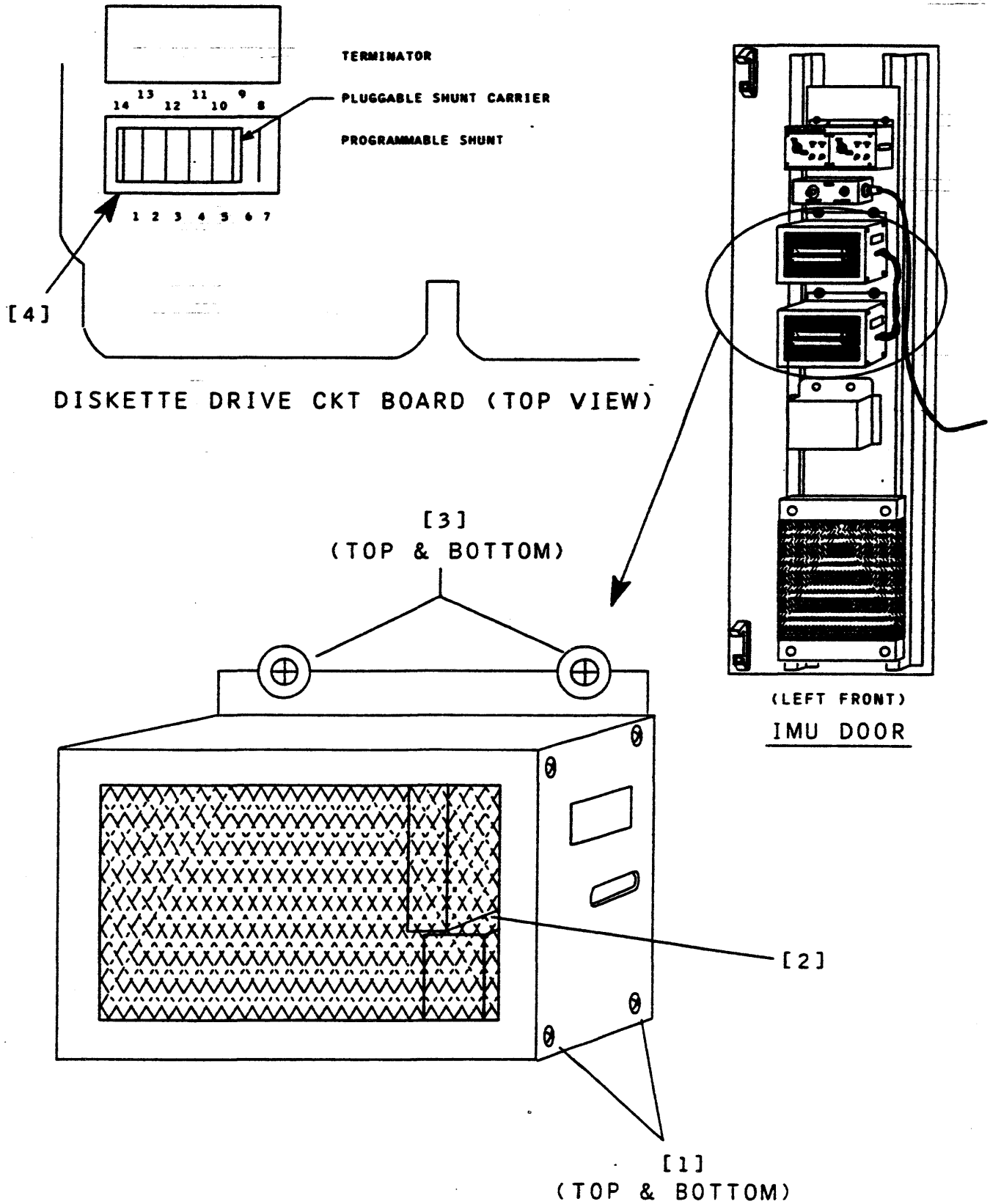

FIGURE 2.1-1. DISKETTE DRIVE UNIT REMOVAL/INSTALLATION

REMOVAL STEPS:

NOTE: This procedure requires all resources affected by faulty ORU be released or isolated from operating system prior to start of ORU repair.

1. Isolate (release) affected resources from operating system (see Maintenance Procedure 4.1).

2. Using hex-head wrench, release cabinet's front door latch mechanism and open door.

3. Remove cabinet logic power by pressing POWER OFF switch on faulty cabinet's Operator Control Panel.

4. Place Power Control Module's (VC1) Power Control REMOTE/LOCAL switch in LOCAL position.

5. Using cross-tip screwdriver, remove drive unit's end plate (Figure 2.1-1, [1]).

6. Using hands, disconnect faulty drive unit's harness connectors (Figure 2.1-1, [2]).

7. Using cross-tip screwdriver, remove faulty disk drive unit's retaining hardware and remove unit from door panel (Figure 2.1-1, [3]).

8. Using cross-tip screwdriver, remove cover from faulty disk drive.

9. Locate the programmable shunt and if present the terminator (see Figure 2.1-1, [4]).

10. Note the programmabe shunt connections which are still shorted and the presence or absence of the terminator. The replacement disk drive must be configured the same as the defective disk drive.

11. Install and, using cross-tip screwdriver, secure defective drive unit's cover and end plate.

INSTALLATION STEPS:

1. Using cross-tip screwdriver, remove replacement drive unit's end plate

2. Using cross-tip screwdriver, remove cover from replacement disk drive.

3. Locate the programmable shunt. This device assigns the address to the drive. It must contain the same connections as the faulty disk drive.

4. Ensure the replacement disk drive is terminated the same as the faulty disk drive.

5. Install and, using cross-tip screwdriver, secure covers on both drives.

6. Position replacement disk drive unit on cabinet door and, using cross-tip screwdriver, secure with retaining hardware previously removed.

7. Using hands, reconnect harness connectors to applicable positions in replacement drive unit.

8. Install and, using cross-tip screwdriver, secure both drive units' end plates.

9. Close and secure cabinet doors.

REPAIR VERIFICATION:

1. No special repair verification procedures are identified.

2. Continue normal operation.

PROCEDURE 2.2

PURPOSE: This routine describes the removal and installation of MMU/SCU Logic Boards

PART NUMBER:

58018530-xxx	58063070-xxx	58066960-xxx
58032260-xxx	58065000-xxx	58066970-xxx
58037400-xxx	58065010-xxx	58071460-xxx
58039720-xxx	58065100-xxx	58071470-xxx
58048920-xxx	58065400-xxx	58071480-xxx
58048950-xxx	58065410-xxx	58071660-xxx
58053815-xxx	58065420-xxx	58071760-xxx
58055600-xxx	58066690-xxx	58089270-xxx
58056411-xxx	58066820-xxx	

REQUIRED TOOLS

Hex-head wrench (4mm)
Board extractor.

REQUIRED TEST EQUIPMENT/MATERIALS

Maintenance Procedure 4.1 -	Isolating/Releasing System Resources
Maintenance Procedure 4.2 -	Repair Verification (KWIK, NFTs, DPMs, etc.)
Maintenance Procedure 4.3 -	Assigning System Resources

PRECAUTIONS: Strict compliance with all cautions and warnings is required to preclude injury and/or equipment damage.

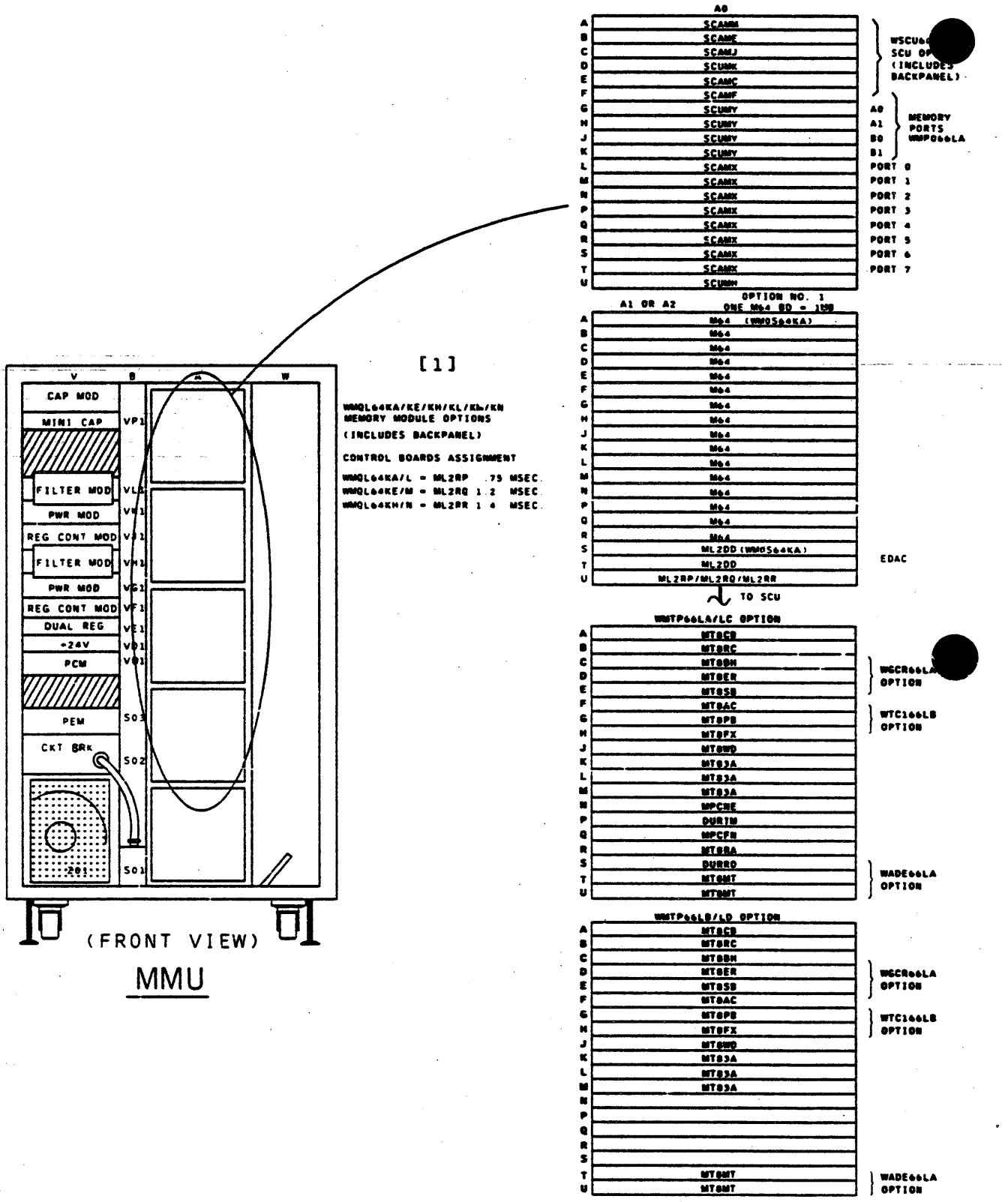

FIGURE 2.2-1. MMU/SCU LOGIC BOARD REMOVAL/INSTALLATION

REMOVAL STEPS:

NOTE: This procedure requires all resources affected by faulty ORU be released or isolated from operating system prior to start of ORU repair.

1. Isolate (release) affected resources from operating system (see Maintenance Procedure 4.1).

2. Using hex-head wrench, release MMU cabinet's front door latch mechanisms and open doors.

3. Remove cabinet logic power by pressing POWER OFF switch at faulty cabinet's Operator Control Panel.

4. Using logic board location diagram, identify position of faulty ORU (Figure 2.2-1, [1]).

5. Using board extractor, remove defective logic board.

   NOTE: When applicable, disconnect logic board edge connectors (ML2DD, ML2RP, ML2RQ, and ML2RR boards only) to allow removal of defective ORU.

INSTALLATION STEPS:

1. Slide replacement logic board into position via front of cabinet.

2. Using hands, carefully press logic board into fully installed position.

3. Reconnect logic board edge connectors to respective positions (as required).

4. Restore cabinet logic power by pressing POWER ON switch at cabinet's Operator Control Panel.

5. Close and secure cabinet doors.

REPAIR VERIFICATION:

1. Ensure cabinet's Operator Control Panel indications are within normal operating limits:

   o All fault indicators extinguished

   o AC and POWER ON indicators illuminated

2. Perform Maintenance Procedure 4.2 - Repair Verification (KWIK, NFTs, DPMs, etc.) to determine the acceptability of the repair action taken.

3. Assign resources back to operating system (see Maintenance Procedure 4.3).

4. Continue normal operation.

PROCEDURE 2.3

PURPOSE: This routine describes the removal and installation of Dual 100W Regulator

PART NUMBER: 58035820-xxx

REQUIRED TOOLS

Hex-head wrench (4mm)
Cross-tip screwdriver

REQUIRED TEST EQUIPMENT/MATERIALS

Maintenance Procedure 4.1 -	Isolating/Releasing System Resources
Maintenance Procedure 3.1 -	Power Regulator Adjustment (58035820-xxx)
Maintenance Procedure 4.2 -	Repair Verification (KWIK, NFTs, DPMs, etc.)
Maintenance Procedure 4.3 -	Assigning System Resources

PRECAUTIONS: Strict compliance with all cautions and warnings is required to preclude injury and/or equipment damage.

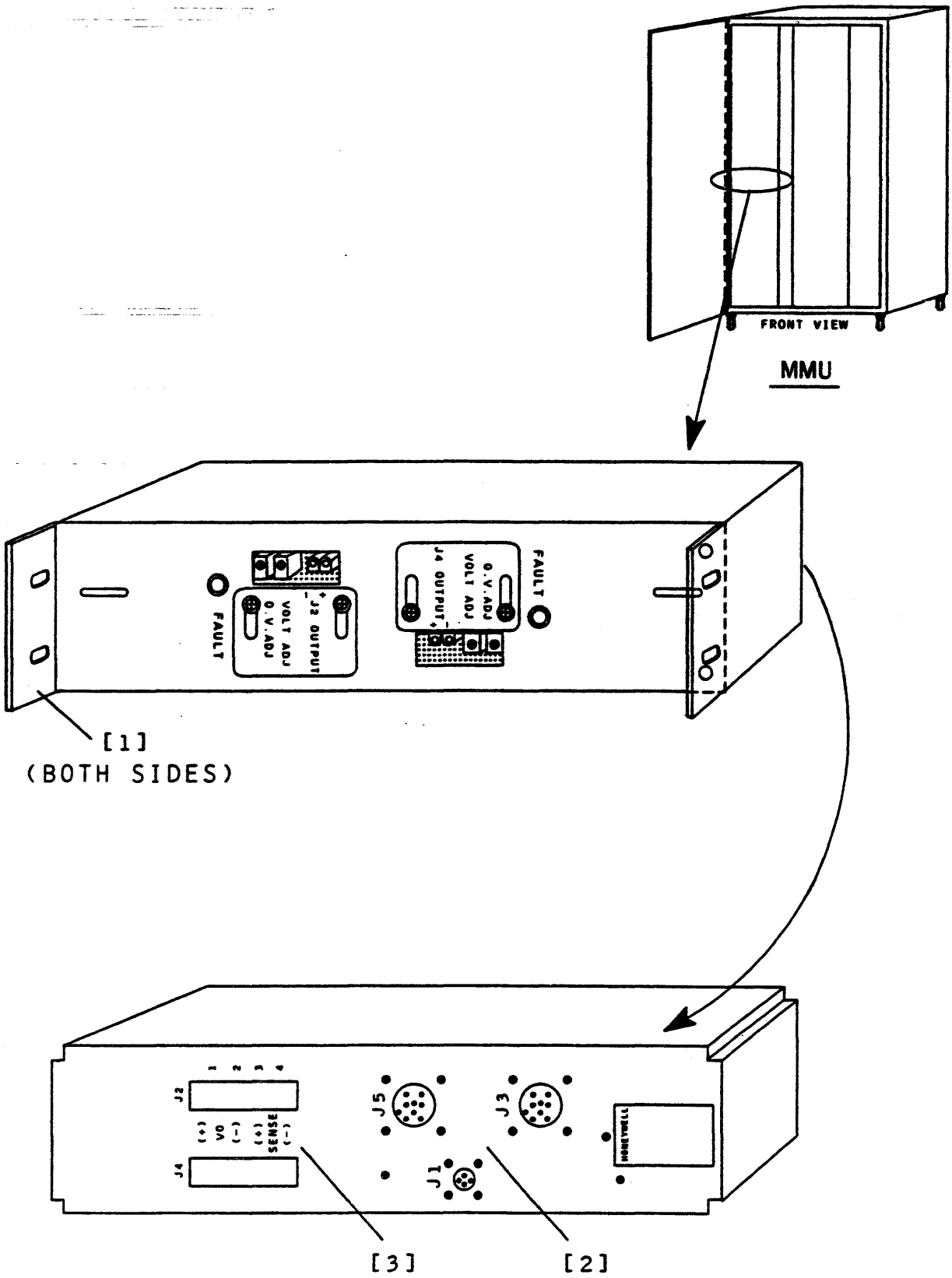

FIGURE 2.3-1. DUAL 100W REG. REMOVAL/INSTALLATION

REMOVAL STEPS:

NOTE: This procedure requires all resources affected by faulty ORU be released or isolated from operating system prior to start of ORU repair.

1. Isolate (release) affected resources from operating system (see Maintenance Procedure 4.1).

2. Using hex-head wrench, release MMU cabinet's front and rear door latch mechanisms and open doors.

3. Remove regulator's output power by pressing POWER OFF switch at faulty cabinet's Operator Control Panel.

4. Place Power Control Module's (VC1) Power Control REMOTE/LOCAL switch in LOCAL position.

5. Place cabinet input power (S01) circuit breaker in OFF position.

6. Using cross-tip screwdriver, remove regulator's front retaining hardware (Figure 2.3-1, [1]).

7. Disconnect connector plugs P1, P3, and P5 from rear of regulator (Figure 2.3-1, [2]).

8. Using cross-tip screwdriver, remove SENSE and OUTPUT electrical lead securing hardware (J2 & J4) at rear of regulator (Figure 2.3-1, [3]).

9. Carefully slide faulty module slightly forward by pushing module via rear of cabinet.

10. Remove and place aside faulty regulator module via front of cabinet.

INSTALLATION STEPS:

1. Slide replacement regulator module into position via front of cabinet.

2. Install and, using cross-tip screwdriver, secure front retaining hardware.

3. Install and, using cross-tip screwdriver, secure both regulator OUTPUT and SENSE electrical leads to respective positions on J2 and J4 terminals.

4. Reconnect rear connector plugs P1, P3, and P5 to corresponding numbered jacks.

5. Place cabinet input power circuit breaker in ON position.

6. Perform Maintenance Procedure 3.1 - Dual 100W Regulator (58035820-xxx) Adjustment.

7. Verify that Power Control Module's Power Control REMOTE/LOCAL switch is in REMOTE position.

8. Close and secure cabinet doors.

REPAIR VERIFICATION:

1. Ensure cabinet's Operator Control Panel indications are within normal operating limits:

   o All fault indicators extinguished

   o AC and POWER ON indicators illuminated

2. Perform Maintenance Procedure 4.2 - Repair Verification (KWIK, NFTs, DPMs, etc.) to determine the acceptability of the repair action taken.

3. Assign resources back to operating system (see Maintenance Procedure 4.3).

4. Continue normal operation.

PROCEDURE 2.4

PURPOSE: This routine describes the removal and installation of CPU HDUHC PWA

PART NUMBERS:

58035950-xxx	58052890-xxx	58065060-xxx	58067110-xxx
58037640-xxx	58052900-xxx	58065520-xxx	58067120-xxx
58044510-xxx	58052920-xxx	58065530-xxx	58071490-xxx
58044550-xxx	58052930-xxx	58065540-xxx	58071500-xxx
58044560-xxx	58052940-xxx	58065560-xxx	58071510-xxx
58044630-xxx	58052950-xxx	58065570-xxx	58071520-xxx
58044690-xxx	58052980-xxx	58065670-xxx	58071540-xxx
58044740-xxx	58053930-xxx	58065680-xxx	58071690-xxx
58044760-xxx	58053940-xxx	58065690-xxx	58071700-xxx
58044770-xxx	58055100-xxx	58065740-xxx	58071730-xxx
58044780-xxx	58064740-xxx	58065750-xxx	58075670-xxx
58048970-xxx	58064750-xxx	58065810-xxx	58075800-xxx
58052840-xxx	58064760-xxx	58066660-xxx	58075810-xxx
58052850-xxx	58064770-xxx	58066670-xxx	58075820-xxx
58052860-xxx	58064830-xxx	58066800-xxx	58076180-xxx
58052870-xxx	58064940-xxx	58067010-xxx	58076220-xxx
58052880-xxx	58065050-xxx	58067020-xxx	58076230-xxx

REQUIRED TOOLS

Hex-head wrench (4mm)
Board extractor

REQUIRED TEST EQUIPMENT/MATERIALS

Maintenance Procedure 4.1 -	Isolating/Releasing System Resources
Maintenance Procedure 4.2 -	Repair Verification (KWIK, NFTs, DPMs, etc.)
Maintenance Procedure 4.3 -	Assigning System Resources

PRECAUTIONS: Strict compliance with all cautions and warnings is required to preclude injury and/or equipment damage.

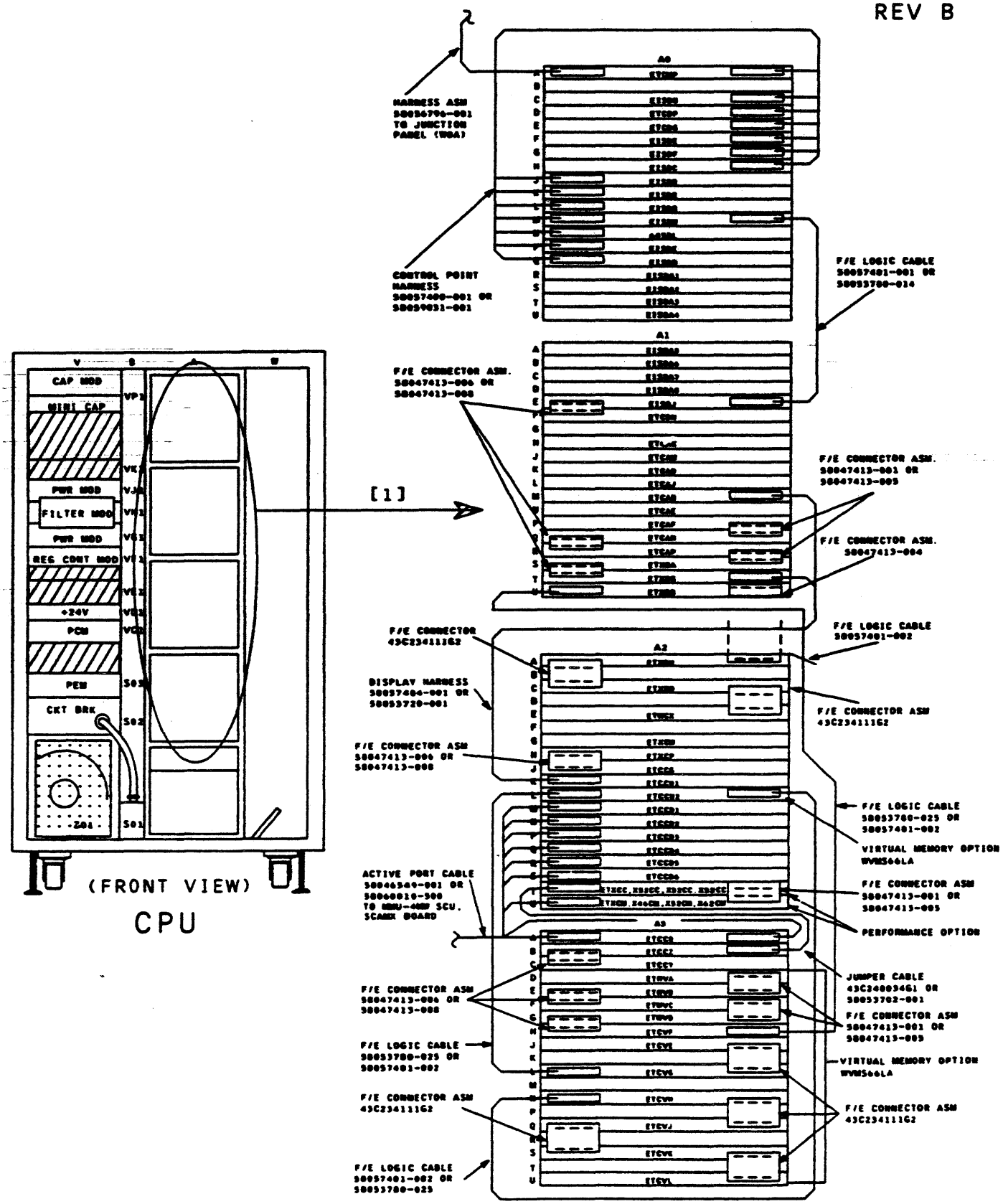

FIGURE 2.4-1. CPU HDUHC PWA REMOVAL/INSTALLATION

REMOVAL STEPS:

NOTE: This procedure requires all resources affected by faulty ORU be released or isolated from operating system prior to start of ORU repair.

1. Isolate (release) affected resources from operating system (see Maintenance Procedure 4.1).

2. Using hex-head wrench, release CPU cabinet's front door latch mechanisms and open doors.

3. Remove cabinet logic power by pressing POWER OFF switch at faulty cabinet's Operator Control Panel.

4. Using logic board location diagram, identify position of faulty ORU (Figure 2.4-1, [1]).

5. Using board extractor, remove defective logic board.

   NOTE: Removal of selected ORUs will require that edge connectors be removed prior to actual removal of the defective ORU.

INSTALLATION STEPS:

1. Slide replacement logic board into position via front of cabinet.

2. Using hands, carefully press logic board into fully installed position.

3. Reconnect logic board edge connectors to respective positions (as required).

4. Restore cabinet logic power by pressing POWER ON switch at cabinet's Operator Control Panel.

5. Close and secure cabinet doors.

REPAIR VERIFICATION:

1. Ensure cabinet's Operator Control Panel indications are within normal operating limits:

   o All fault indicators extinguished

   o AC and POWER ON indicators illuminated

2. Perform Maintenance Procedure 4.2 - Repair Verification (KWIK, NFTs, DPMs, etc.) to determine the acceptability of the repair action taken.

3. Assign resources back to operating system (see Maintenance Procedure 4.3).

4. Continue normal operation.

PROCEDURE 2.5

PURPOSE: This routine describes the removal and installation of Blower Assembly

PART NUMBER: 58039449-xxx

REQUIRED TOOLS

Hex-head wrench (4mm)
Cross-tip screwdriver
Diagonal cutters
Tie wraps

REQUIRED TEST EQUIPMENT/MATERIALS

Maintenance Procedure 4.1 - Isolating/Releasing System Resources
Maintenance Procedure 4.3 - Assigning System Resources

PRECAUTIONS: Strict compliance with all cautions and warnings is required to preclude injury and/or equipment damage.

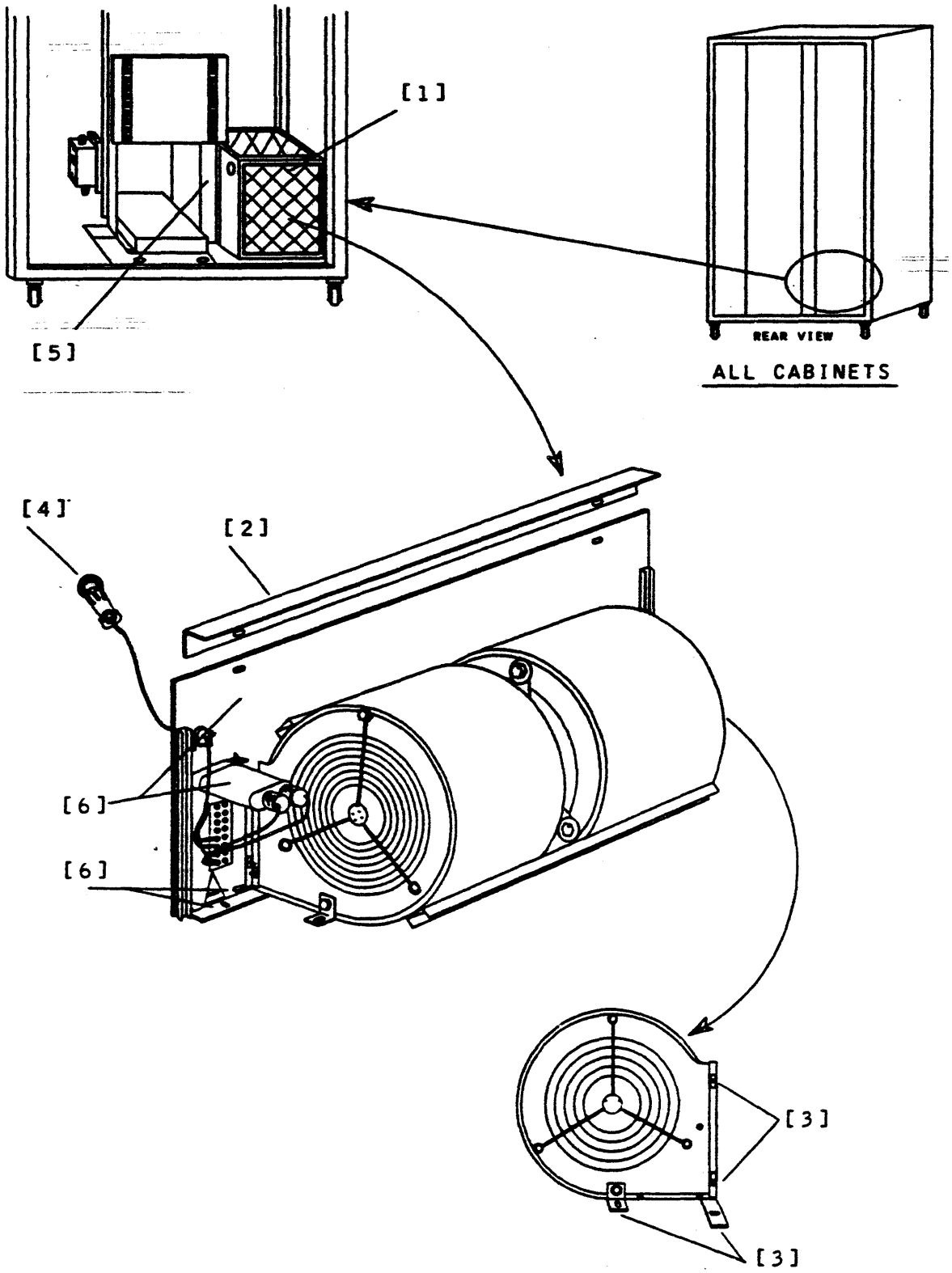

FIGURE 2.5-1. BLOWER ASSEMBLY REMOVAL/INSTALLATION

REMOVAL STEPS:

NOTE: This procedure requires all resources affected by faulty ORU be released or isolated from operating system prior to start of ORU repair.

1. Isolate (release) affected resources from operating system (see Maintenance Procedure 4.1).

2. Using hex-head wrench, release cabinet's front and rear door latch mechanisms and open doors.

3. Remove cabinet logic power by pressing POWER OFF switch on faulty cabinet's Operator Control Panel.

4. Place Power Control Module's (VC1) Power Control REMOTE/LOCAL switch in LOCAL position.

5. Place cabinet BLOWER power circuit breaker in OFF position.

7. Using cross-tip screwdriver, remove front and rear support bracket retaining hardware from blower assembly - remove bracket from cabinet (Figure 2.5-1, [2]).

8. Using cross-tip screwdriver and open-end wrench, remove blower assembly front retaining hardware (Figure 2.5, [3]).

9. Disconnect rear connector plug ZM1-P3 (Figure 2.5-1, [4]).

10. Using cross-tip screwdriver, remove lower rear plenum cover (allows room to move blower assembly) retaining hardware (Figure 2.5-1, [5]).

11. Using cross-tip screwdriver and open-end wrench, remove blower assembly rear retaining hardware (Figure 2.5, [6]).

12. Using hands, carefully slide blower assembly out rear of cabinet.

INSTALLATION STEPS:

1. Slide replacement blower assembly into position via rear of cabinet - align blower assembly hardware mounting holes to permit installation of retaining hardware.

2. Position blower assembly support bracket and hand start retaining hardware.

3. Hand start remaining blower assembly retaining hardware.

4. Using cross-tip screwdriver and open-end wrench, secure all blower assembly and bracket retaining hardware.

5. Position and, using cross-tip screwdriver, secure lower plenum edge cover with hardware previously removed.

6. Reconnect blower assembly connector plug Z01-P3.

7. Using hands, install both front and rear air filter elements (top first) in blower compartment.

   NOTE: Filter elements should be cleaned in accordance with directions stamped on element frame. When installed arrow stamped on frame must point in direction of air flow (toward blower motors).

8. Place cabinet BLOWER power circuit breaker in ON position.

9. Place Power Control Module's (VC1) Power Control REMOTE/LOCAL switch in REMOTE position.

10. Restore cabinet logic power by pressing POWER ON switch on Operator Control Panel.

11. Close and secure cabinet doors.

REPAIR VERIFICATION:

1. Ensure that cabinet's Operator Control Panel indications are within normal operating limits:

   o All fault indicators extinguished

   o AC and POWER ON indicators illuminated

2. Perform Maintenance Procedure 4.2 - Repair Verification (KWIK, NFTs, DPMs, etc.) to determine the acceptability of the repair action taken.

3. Assign resources back to operating system (see Maintenance Procedure 4.3).

4. Continue normal operation.

PROCEDURE 2.6

PURPOSE: This routine describes the removal and installation of PWA (Termination) Boards

PART NUMBER: 58047150-xxx
58059480-xxx
58059490-xxx
58059500-xxx
58059510-xxx

REQUIRED TOOLS

Hex-head wrench (4mm)

REQUIRED TEST EQUIPMENT/MATERIALS

Maintenance Procedure 4.1 - Isolating/Releasing System Resources
Maintenance Procedure 4.2 - Repair Verification (KWIK, NFTs, DPMs, etc.)
Maintenance Procedure 4.3 - Assigning System Resources

PRECAUTIONS: Strict compliance with all cautions and warnings is required to preclude injury and/or equipment damage.

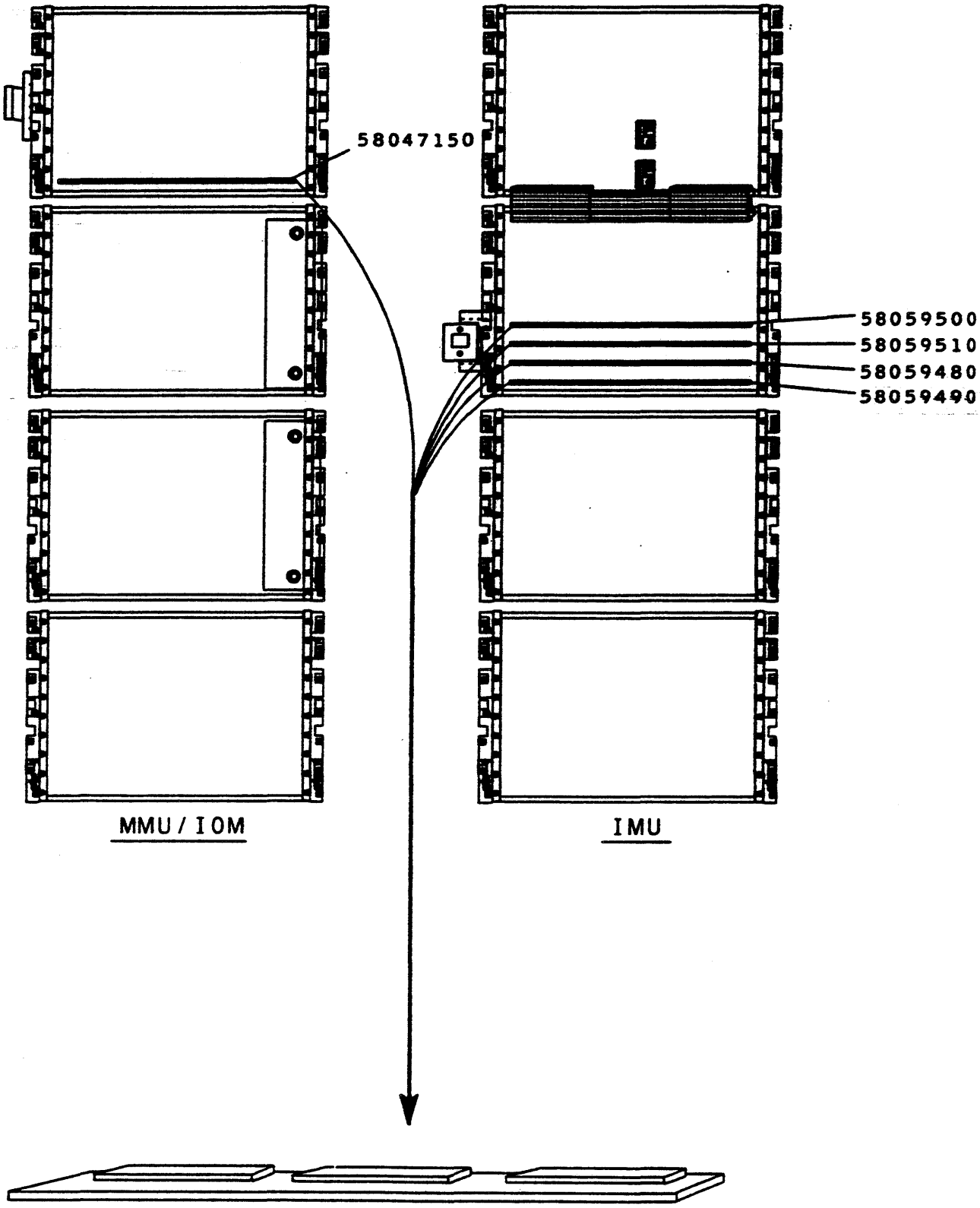

FIGURE 2.6-1. PWA (TERMINATION) BOARD REMOVAL/INSTALLATION

REMOVAL STEPS:

NOTE: This procedure requires all resources affected by faulty ORU be released or isolated from operating system prior to start of ORU repair.

1. Isolate (release) affected resources from operating system (see Maintenance Procedure 4.1).

2. Using hex-head wrench, release cabinet's front and rear door latch mechanisms and open doors.

3. Remove cabinet logic power by pressing POWER OFF switch on faulty cabinet's Operator Control Panel.

4. Place Power Control Module's (VC1) Power Control REMOTE/LOCAL switch in LOCAL position.

CAUTION

BACKPANEL PINS ARE BRITTLE AND EASY TO DAMAGE. EXERCISE CARE DURING PWA REMOVAL OR EQUIPMENT DAMAGE MAY RESULT.

5. Locate faulty PWA at rear of cabinet and, using hands, grip PWA at both corners and pull straight out to remove (Figure 2.6-1, [1]).

   NOTE: It may be necessary to remove or reposition obstructing cables to allow room for PWA removal.

INSTALLATION STEPS:

CAUTION

BACKPANEL PINS ARE BRITTLE AND EASY TO DAMAGE. EXERCISE CARE DURING PWA INSTALLATION OR EQUIPMENT DAMAGE MAY RESULT.

1. Position replacement PWA and press into fully installed position.

2. Place Power Control Module's (VC1) Power Control REMOTE/LOCAL switch in REMOTE position.

3. Restore cabinet logic power by pressing POWER ON switch on Operator Control Panel.

4. Close and secure cabinet doors.

REPAIR VERIFICATION:

1. Ensure that cabinet's Operator Control Panel indications are within normal operating limits:

   o All fault indicators extinguished

   o AC and POWER ON indicators illuminated

2. Perform Maintenance Procedure 4.2 - Repair Verification (KWIK, NFTs, DPMs, etc.) to determine the acceptability of the repair action taken.

3. Assign resources back to operating system (see Maintenance Procedure 4.3).

4. Continue normal operation.

PROCEDURE 2.7

PURPOSE: This routine describes the removal and installation of Voltage Regulator 100W

PART NUMBER: 58047200-xxx

REQUIRED TOOLS

Hex-head wrench (4mm)
Cross-tip screwdriver

REQUIRED TEST EQUIPMENT/MATERIALS

Maintenance Procedure 4.1 -	Isolating/Releasing System Resources
Maintenance Procedure 3.2 -	Voltage Regulator 100W Adjustment (58047200-xxx)
Maintenance Procedure 4.2 -	Repair Verification (KWIK, NFTs, DPMs, etc.)
Maintenance Procedure 4.3 -	Assigning System Resources

PRECAUTIONS: Strict compliance with all cautions and warnings is required to preclude injury and/or equipment damage.

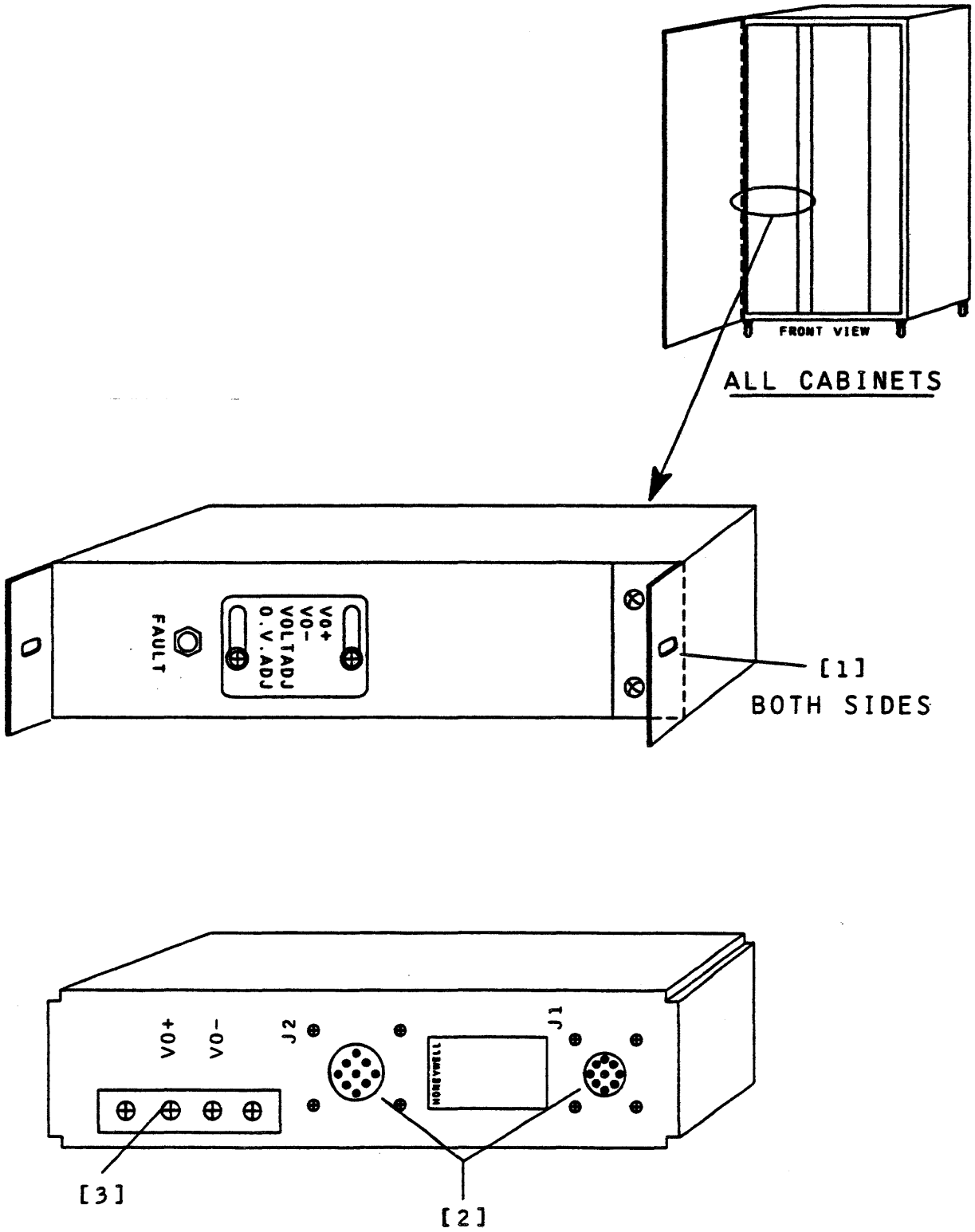

FIGURE 2.7-1. VOLTAGE REGULATOR 100W REMOVAL/INSTALLATION

REMOVAL STEPS:

NOTE: This procedure requires all resources affected by faulty ORU be released or isolated from operating system prior to start of ORU repair.

1. Isolate (release) affected resources from operating system (see Maintenance Procedure 4.1).

2. Using hex-head wrench, release faulty cabinet's front and rear door latch mechanisms and open doors.

3. Remove regulator's output power by pressing POWER OFF switch at faulty cabinet's Operator Control Panel.

4. Place Power Control Module's (VC1) Power Control REMOTE/LOCAL switch in LOCAL position.

5. Place cabinet input power (S01) circuit breaker in OFF position.

6. Using cross-tip screwdriver, remove regulator's front retaining hardware (Figure 2.7-1, [1]).

7. Disconnect connector plugs P1 and P2 from rear of regulator (Figure 2.7-1, [2]).

8. Using cross-tip screwdriver, remove V0+ and V0- electrical lead securing hardware at rear of regulator (Figure 2.7-1, [3]).

9. Carefully slide faulty module slightly forward by pushing module via rear of cabinet.

10. Remove and place aside faulty regulator module via front of cabinet.

INSTALLATION STEPS:

1. Slide replacement regulator module into position via front of cabinet.

2. Install and, using cross-tip screwdriver, secure front retaining hardware.

3. Install and, using cross-tip screwdriver, secure regulator V0+ and V0- electrical leads to respective positions on terminal.

4. Reconnect rear connector plugs P1 and P2 to corresponding numbered jacks.

5. Place cabinet input power circuit breaker in ON position.

6. Perform Maintenance Procedure 3.2 - Voltage Regulator 100W (58047200-xxx) Adjustment.

7. Verify that Power Control Module's Power Control REMOTE/LOCAL switch is in REMOTE position.

8. Close and secure cabinet doors.

REPAIR VERIFICATION:

1. Ensure cabinet's Operator Control Panel indications are within normal operating limits:

   o All fault indicators extinguished

   o AC and POWER ON indicators illuminated

2. Perform Maintenance Procedure 4.2 - Repair Verification (KWIK, NFTs, DPMs, etc.) to determine the acceptability of the repair action taken.

3. Assign resources back to operating system (see Maintenance Procedure 4.3).

4. Continue normal operation.

PROCEDURE 2.8

PURPOSE: This routine describes the removal and installation of Actuator Module

PART NUMBER: 58054246-xxx

REQUIRED TOOLS

Hex-head wrench (4mm)
Cross-tip screwdriver

REQUIRED TEST EQUIPMENT/MATERIALS

None

PRECAUTIONS: Strict compliance with all cautions and warnings is required to preclude injury and/or equipment damage.

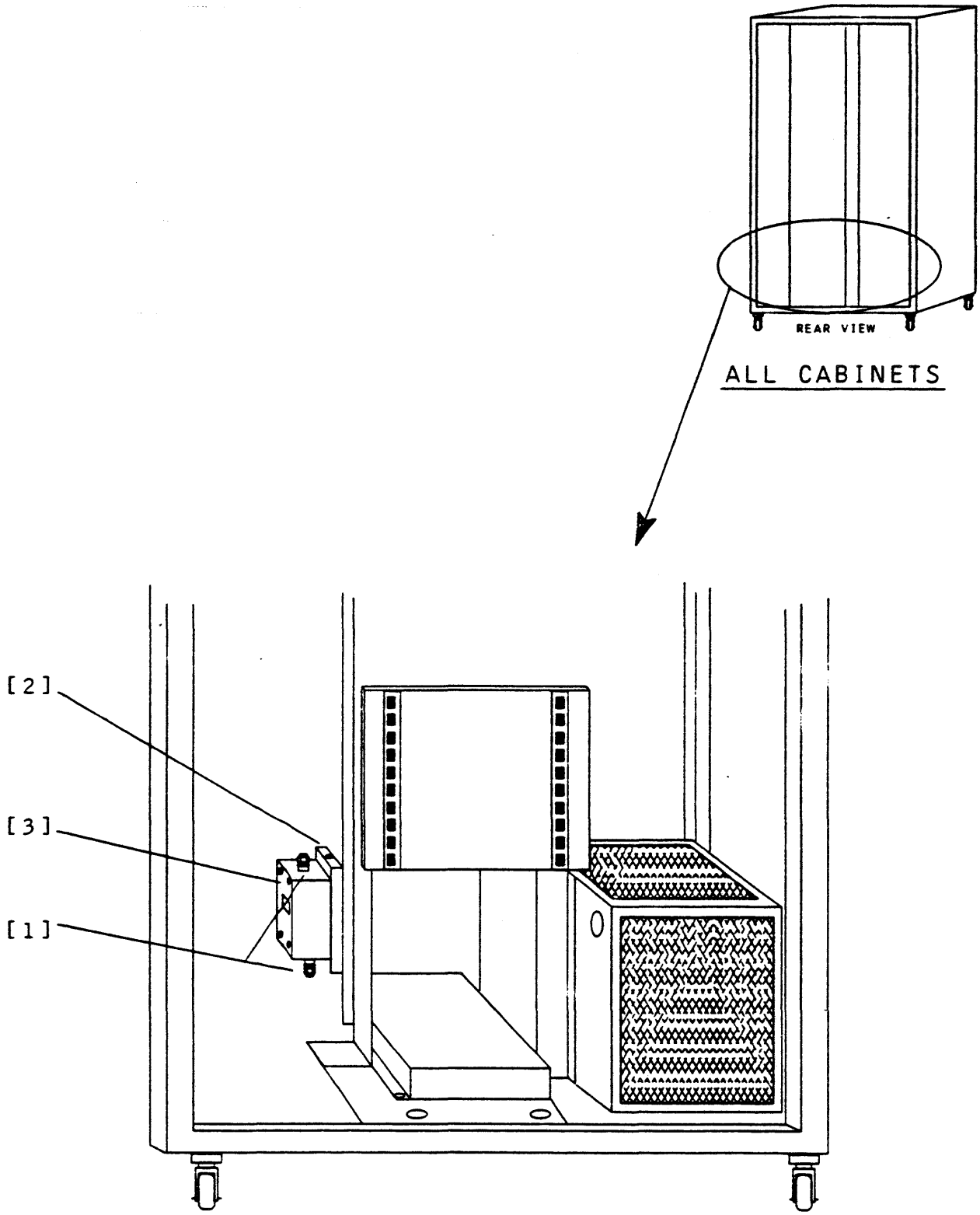

FIGURE 2.8-1. ACTUATOR MODULE REMOVAL/INSTALLATION

REMOVAL STEPS:

NOTE: This procedure will not interrupt normal operation

1. Using hex-head wrench, release faulty cabinet's rear door latch mechanisms and open doors.

2. Disconnect faulty actuator's connector plugs in following order ONLY: P3, P2, and P1 (Figure 2.8-1, [1]).

3. Using cross-tip screwdriver, remove retaining hardware and faulty actuator (Figure 2.8-1, [2]).

INSTALLATION STEPS:

1. Note position of defective module DIP switches and set replacement actuator switches to identical settings (Figure 2.8-1, [3]).

2. Position and, using cross-tip screwdriver, secure replacement module to cabinet frame.

3. Reconnect connector plugs in following order ONLY: P1, P2, and P3.

4. Close and secure the cabinet doors.

REPAIR VERIFICATION:

1. Ensure that cabinet's Operator Control Panel indications are within normal operating limits:

   o All fault indicators extinguished

   o AC and POWER ON indicators illuminated

2. Continue normal operation.

PROCEDURE 2.9

PURPOSE: This routine describes the removal and installation of PWB Assembly (Voltage Monitor)

PART NUMBER: 58056729-xxx

REQUIRED TOOLS

Hex-head wrench (4mm)
Cross-tip screwdriver

REQUIRED TEST EQUIPMENT/MATERIALS

Maintenance Procedure 4.1 -	Isolating/Releasing System Resources
Maintenance Procedure 3.3 -	Voltage Monitor (TTL) Adjustment (58056729-xxx)
Maintenance Procedure 4.2 -	Repair Verification (KWIK, NFTs, DPMs, etc.)
Maintenance Procedure 4.3 -	Assigning System Resources

PRECAUTIONS: Strict compliance with all cautions and warnings is required to preclude injury and/or equipment damage.

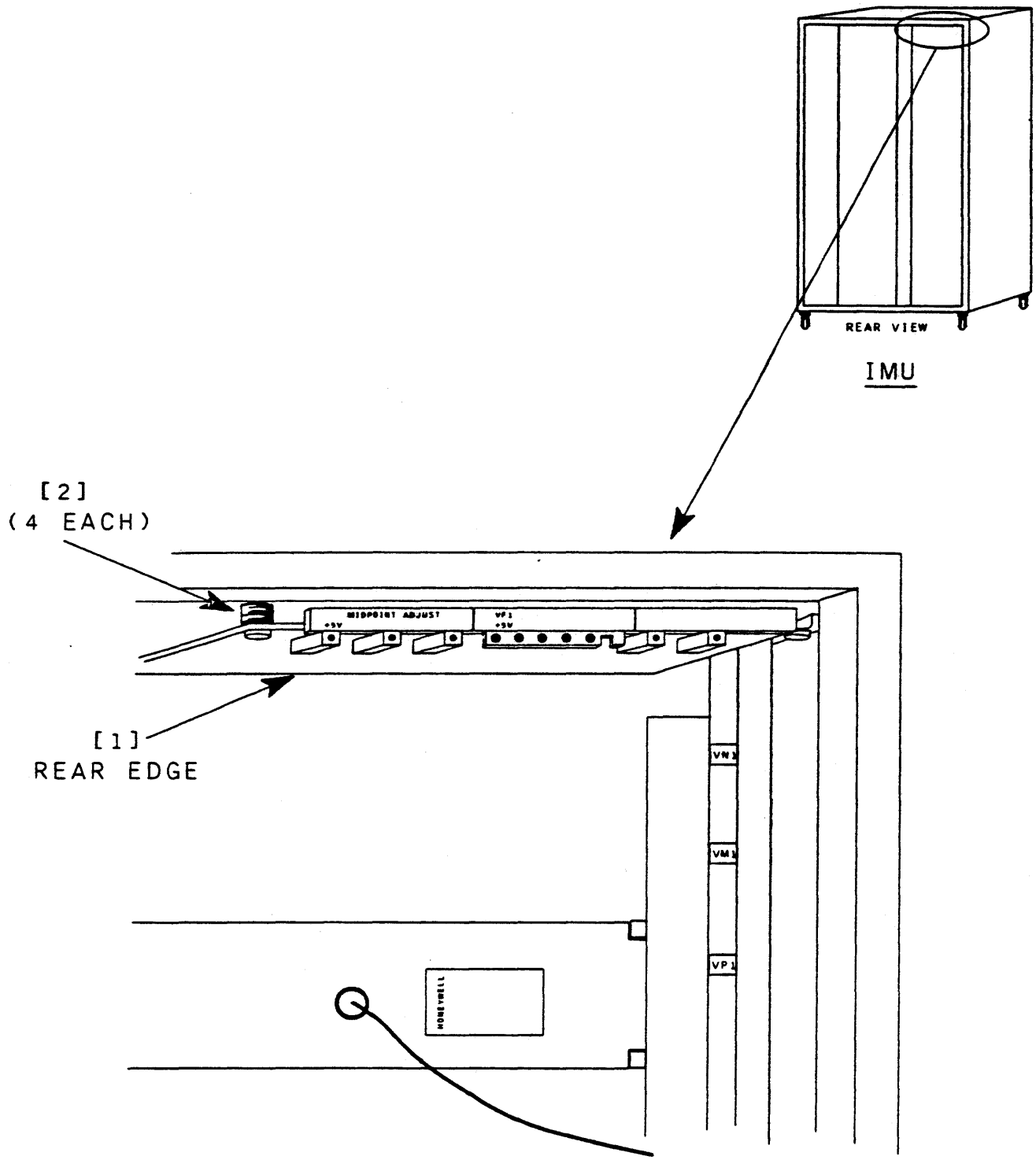

FIGURE 2.9-1. VOLTAGE MONITOR PWB REMOVAL/INSTALLATION

REMOVAL STEPS:

NOTE: This procedure requires all resources affected by faulty ORU be released or isolated from operating system prior to start of ORU repair.

1. Isolate (release) affected resources from operating system (see Maintenance Procedure 4.1).

2. Using hex-head wrench, release cabinet's front and rear door latch mechanisms and open doors.

3. Remove cabinet logic power by pressing POWER OFF switch on faulty cabinet's Operator Control Panel.

4. Place Power Control Module's (VC1) Power Control REMOTE/LOCAL switch in LOCAL position.

5. Disconnect PWB connector plugs (Figure 2.9-1, [1] .

6. Using cross-tip screwdriver, remove retaining hardware, spacers, and PWB (Figure 2.9-1, [2]).

INSTALLATION STEPS:

1. Install and, using cross-tip screwdriver, secure PWB with retaining hardware and spacers previously removed.

2. Reconnect circuit board connector plugs to corresponding numbered connectors.

3. Place Power Control Module's (VC1) Power Control REMOTE/LOCAL switch in REMOTE position.

4. Restore cabinet logic power by pressing POWER ON switch at cabinet's Operator Control Panel.

5. Perform Maintenance Procedure 3.3 - Voltage Monitor (TTL) Adjustment (58056729-xxx) [IF REQUIRED].

6. Close and secure cabinet doors.

REPAIR VERIFICATION:

1. Ensure cabinet's Operator Control Panel indications are within normal operating limits:

   o All fault indicators extinguished

   o AC and POWER ON indicators illuminated

2. Perform Maintenance Procedure 4.2 - Repair Verification (KWIK, NFTs, DPMs, etc.) to determine the acceptability of the repair action taken.

3. Assign resources back to operating system (see Maintenance Procedure 4.3).

4. Continue normal operation.

PROCEDURE 2.10

PURPOSE: This routine describes the removal and installation of PWB Assembly (LED Display)

PART NUMBER: 58057241-xxx

REQUIRED TOOLS

Hex-head wrench (4mm)
Cross-tip screwdriver
Socket set and ratchet

REQUIRED TEST EQUIPMENT/MATERIALS

Maintenance Procedure 4.1 - Isolating/Releasing System Resources
Maintenance Procedure 4.3 - Assigning System Resources

PRECAUTIONS: Strict compliance with all cautions and warnings is required to preclude injury and/or equipment damage.

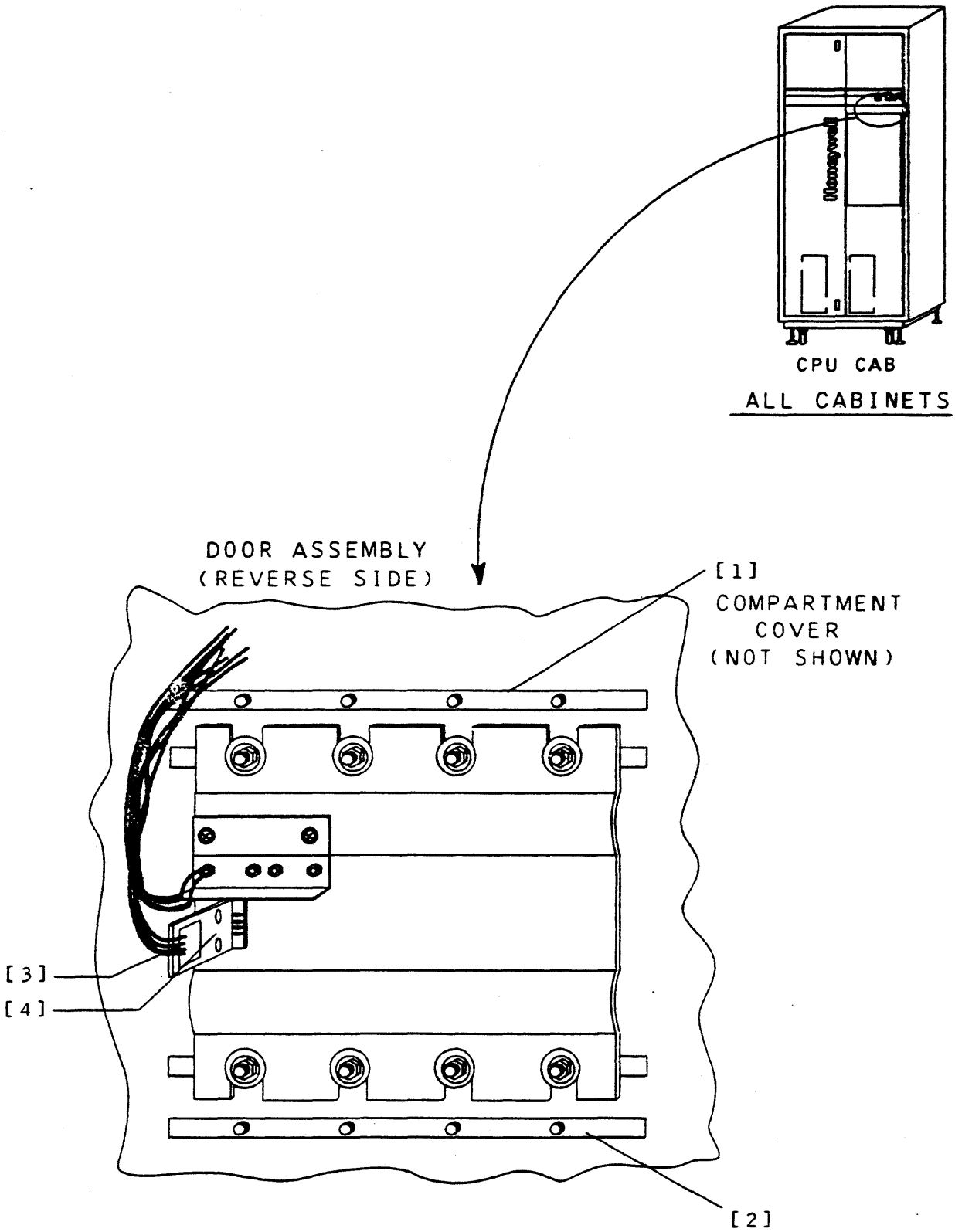

FIGURE 2.10-1. PWB (LED DISPLAY) REMOVAL/INSTALLATION

REMOVAL STEPS:

NOTE: This procedure requires all resources affected by faulty ORU be released or isolated from operating system prior to start of ORU repair.

1. Isolate (release) affected resources from operating system (see Maintenance Procedure 4.1).

2. Using hex-head wrench, release cabinet's front and rear door latch mechanisms and open doors.

3. Remove cabinet logic power by pressing POWER OFF switch on faulty cabinet's Operator Control Panel.

4. Place Power Control Module's (VC1) Power Control REMOTE/LOCAL switch in LOCAL position.

5. Using ratchet and socket, remove retaining hardware from top of Control Panel Assembly cover (Figure 2.10-1, [1]).

6. Using ratchet and socket, loosen retaining hardware on bottom of Control Panel Assembly cover and lift cover from door (Figure 2.10-1, [2]).

7. Disconnect connector plug A1P1 from LED display PWB (Figure 2.10-1, [3]).

8. Using cross-tip screwdriver and nut-driver, remove retaining hardware securing PWB - remove faulty PWB (Figure 2.10-1, [4]).

INSTALLATION STEPS:

1. Position replacement PWB and, using cross-tip screw-driver and nut-driver, secure with retaining hardware previously removed.

2. Reconnect plug A1P1 to PWB.

3. Position Control Panel Assembly cover ensuring cover's lower stud cutouts are inserted between door and bottom retaining hardware.

4. Install and, using ratchet and socket, secure all top and bottom Control Panel Assembly cover retaining hardware.

5. Place Power Control Module's (VC1) Power Control REMOTE/LOCAL switch in REMOTE position.

6. Restore cabinet logic power by pressing POWER ON switch at cabinet's Operator Control Panel.

7. Close and secure cabinet doors.

REPAIR VERIFICATION:

1. Ensure cabinet's Operator Control Panel indications are within normal operating limits:

   o All fault indicators extinguished

   o AC and POWER ON indicators illuminated

2. Assign resources back to operating system (see Maintenance Procedure 4.3).

3. Continue normal operation.

PROCEDURE 2.11

PURPOSE: This routine describes the removal and installation of PWA Board (PCM)

PART NUMBER: 58047286-xxx
58051491-xxx
58057725-xxx
58057895-xxx

REQUIRED TOOLS

Hex-head wrench (4mm)
Cross-tip screwdriver

REQUIRED TEST EQUIPMENT/MATERIALS

Maintenance Procedure 4.1 - Isolating/Releasing System Resources
Maintenance Procedure 4.3 - Assigning System Resources

PRECAUTIONS: Strict compliance with all cautions and warnings is required to preclude injury and/or equipment damage.

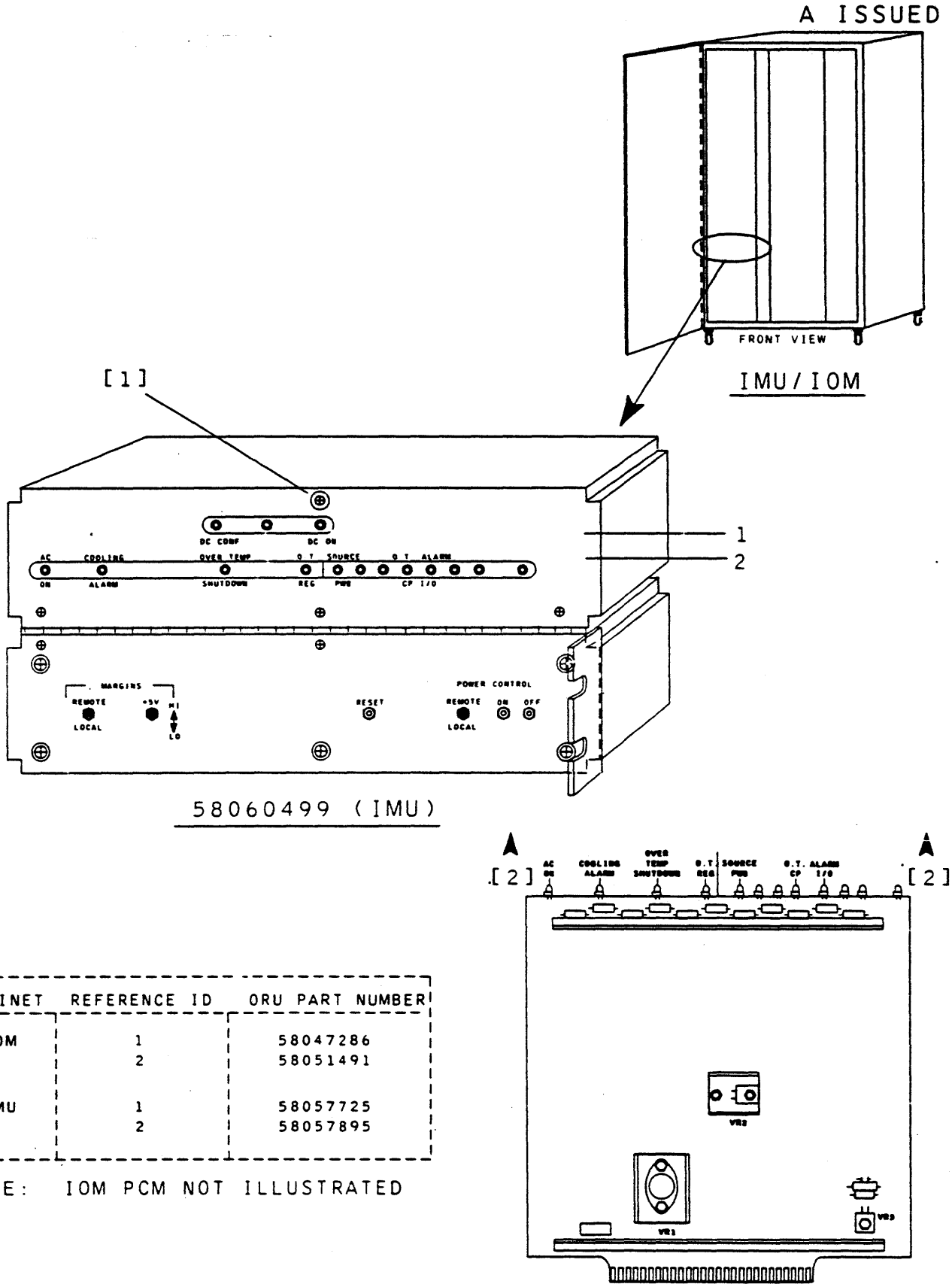

58060499 (IMU)

CABINET	REFERENCE ID	ORU PART NUMBER
IOM	1	58047286
	2	58051491
IMU	1	58057725
	2	58057895

NOTE: IOM PCM NOT ILLUSTRATED

FIGURE 2.11-1. PWB (POWER CONTROL MOD.) REMOVAL/INSTALLATION

REMOVAL STEPS:

NOTE: This procedure requires all resources affected by faulty ORU be released or isolated from operating system prior to start of ORU repair.

1. Isolate (release) affected resources from operating system (see Maintenance Procedure 4.1).

2. Using hex-head wrench, release cabinet's front door latch mechanisms and open doors.

3. Remove cabinet logic power by pressing POWER OFF switch on faulty cabinet's Operator Control Panel.

4. Place Power Control Module's (VC1) Power Control REMOTE/LOCAL switch in LOCAL position.

5. Place cabinet main power circuit breaker in OFF position.

6. Using cross-tip screwdriver, remove PWB compartment retaining hardware and open cover (Figure 2.11-1, [1]).

7. Using hands, grip faulty PWB at both corners and pull straight out to remove (Figure 2.11-1, [2]).

INSTALLATION STEPS:

1. Install replacement PWB, pressing it into fully installed position.

2. Close compartment cover and, using cross-tip screwdriver, install and secure cover retaining hardware.

3. Place cabinet main power circuit breaker in ON position.

4. Place Power Control Module's (VC1) Power Control REMOTE/LOCAL switch in REMOTE position.

5. Restore cabinet logic power by pressing POWER ON switch at cabinet's Operator Control Panel.

6. Close and secure cabinet doors.

REPAIR VERIFICATION:

1. Ensure cabinet's Operator Control Panel indications are within normal operating limits:

   o All fault indicators extinguished

   o AC and POWER ON indicators illuminated

2. Assign resources back to operating system (see Maintenance Procedure 4.3).

3. Continue normal operation.

PROCEDURE 2.12

PURPOSE: This routine describes the removal and installation of Oscillator Board

PART NUMBER: 58058436-xxx

REQUIRED TOOLS

Hex-head wrench (4mm)
Cross-tip screwdriver

REQUIRED TEST EQUIPMENT/MATERIALS

Maintenance Procedure 4.1 -	Isolating/Releasing System Resources
Maintenance Procedure 4.3 -	Repair Verification (KWIK, NFTs, DPMs, etc.)
Maintenance Procedure 4.2 -	Assigning System Resources

PRECAUTIONS: Strict compliance with all cautions and warnings is required to preclude injury and/or equipment damage.

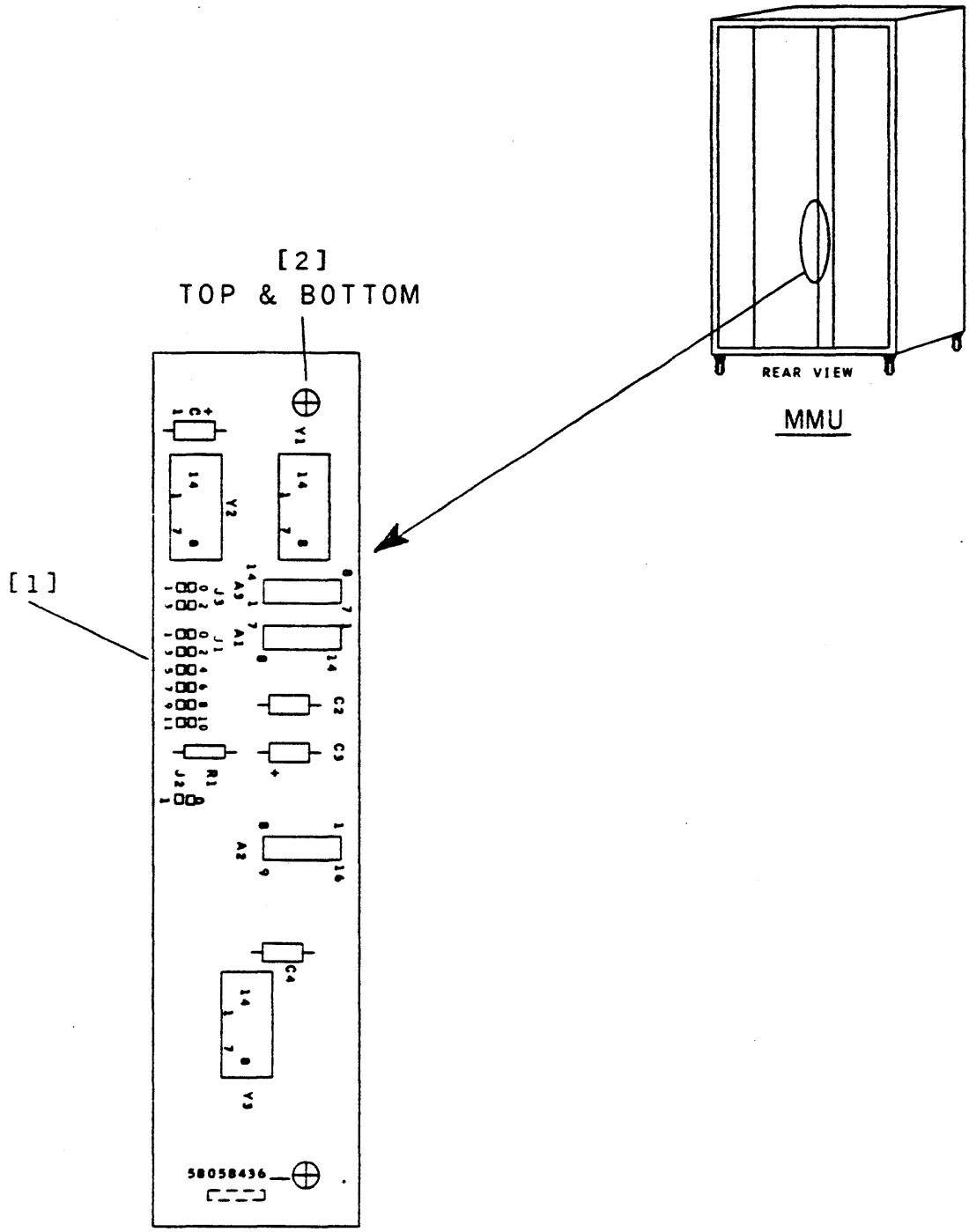

FIGURE 2.12-1. OSCILLATOR BOARD REMOVAL/INSTALLATION

REMOVAL STEPS:

NOTE: This procedure requires all resources affected by faulty ORU be released or isolated from operating system prior to start of ORU repair.

1. Isolate (release) affected resources from operating system (see Maintenance Procedure 4.1).

2. Using hex-head wrench, release cabinet's front and rear door latch mechanisms and open doors.

3. Remove cabinet logic power by pressing POWER OFF switch on faulty cabinet's Operator Control Panel.

4. Place Power Control Module's (VC1) Power Control REMOTE/LOCAL switch in LOCAL position.

5. Disconnect cable and wire connections from faulty PWA (Figure 2.12, [1]).

6. Using cross-tip screwdriver, remove PWA retaining hardware - remove board from cabinet (Figure 2.12, [2]).

INSTALLATION STEPS:

1. Position and, using cross-tip screwdriver, secure replacement PWA with hardware previously removed.

2. Reconnect all cables and wires to corresponding numbered connecting points on PWA.

3. Place Power Control Module's (VC1) Power Control REMOTE/LOCAL switch in REMOTE position.

4. Restore cabinet logic power by pressing POWER ON switch at cabinet's Operator Control Panel.

5. Close and secure cabinet doors.

REPAIR VERIFICATION:

1. Ensure cabinet's Operator Control Panel indications are within normal operating limits:

   o All fault indicators extinguished

   o AC and POWER ON indicators illuminated

2. Perform Maintenance Procedure 4.2 - Repair Verification (KWIK, NFTs, DPMs, etc.) to determine the acceptability of the repair action taken.

3. Assign resources back to operating system (see Maintenance Procedure 4.3).

4. Continue normal operation.

PROCEDURE 2.13

PURPOSE: This routine describes the removal and installation of Circuit Breaker Module

PART NUMBER: 58058132-xxx
58059298-xxx

REQUIRED TOOLS

Hex-head wrench (4mm)
Cross-tip screwdriver
Spanner wrench
Socket set
Torque wrench and adapter

REQUIRED TEST EQUIPMENT/MATERIALS

Maintenance Procedure 4.1 - Isolating/Releasing System Resources
Maintenance Procedure 4.3 - Assigning System Resources

PRECAUTIONS: Strict compliance with all cautions and warnings is required to preclude injury and/or equipment damage.

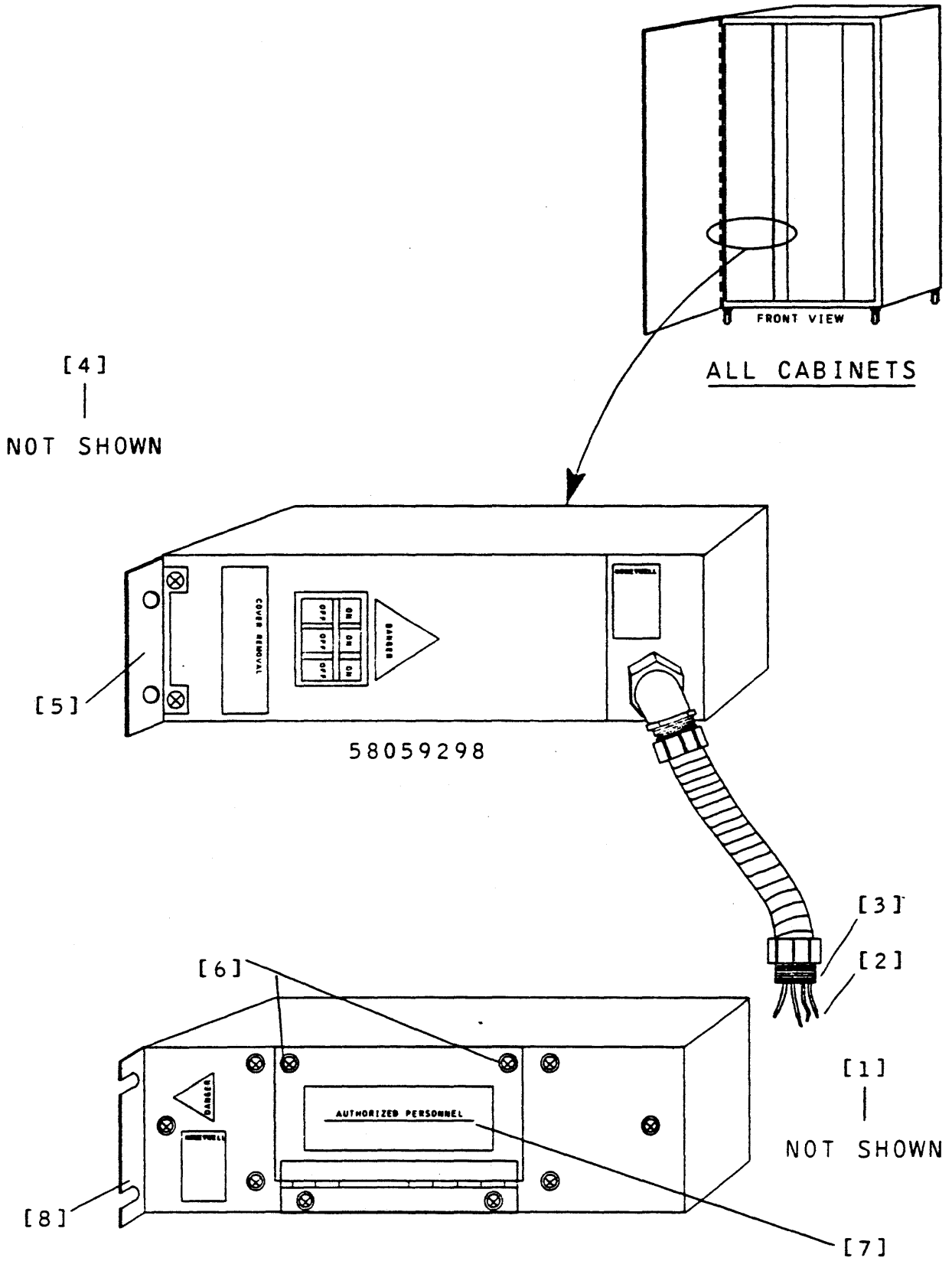

FIGURE 2.13-1. CIRCUIT BREAKER MODULE REMOVAL/INSTALLATION

REMOVAL STEPS:

NOTE: This procedure requires all resources affected by faulty ORU be released or isolated from operating system prior to start of ORU repair.

1. Isolate (release) affected resources from operating system (see Maintenance Procedure 4.1).

2. Using hex-head wrench, release cabinet's front and rear door latch mechanisms and open doors.

3. Remove cabinet logic power by pressing POWER OFF switch on faulty cabinet's Operator Control Panel.

4. Place Power Control Module's (VC1) Power Control REMOTE/LOCAL switch in LOCAL position.

5. Place cabinet main power circuit breaker in OFF position.

WARNING

HAZARDOUS VOLTAGE PRESENT WITHIN CIRCUIT BREAKER MODULE. ENSURE UNIT POWER IS REMOVED AT SYSTEM MAIN BREAKER BOX OR PERSONAL INJURY MAY OCCUR.

6. At system Main Breaker Box (see local site installation plan) set faulty cabinet's input power circuit breaker to OFF.

7. Using cross-tip screwdriver, remove cabinet input power S01 junction box cover (Figure 2.13-1, [1]).

WARNING

HAZARDOUS VOLTAGES MAY BE PRESENT WITHIN THIS UNIT. TO PRECLUDE THE POSSIBILITY OF PERSONAL INJURY, USE VOLTMETER TO VERIFY THAT CABINET INPUT POWER HAS BEEN REMOVED.

8. Using cross-tip screwdriver remove power cable lead securing hardware (Figure 2.13-1, [2]).

9. Using spanner, remove conduit securing hardware and remove conduit and wiring from S01 junction box (Figure 2.13-1, [3]).

10. Using cross-tip screwdriver, remove air pressure switch retaining hardware and position switch to allow circuit breaker module removal (Figure 2.13-1, [4]).

11. Using cross-tip screwdriver, remove circuit breaker module's front retaining hardware (Figure 2.13-1, [5]).

12. Using cross-tip screwdriver, open rear compartment cover (Figure 2.13-1, [6]).

13. Using ratchet and socket, disconnect filter power and ground lead connections (Figure 2.13-1, [7]).

14. Using a cross-tip screwdriver, loosen rear retaining hardware (Figure 2.13-1, [8]).

15. Carefully slide module forward approx. 2 inches by pushing module via rear cabinet.

16. Remove and place aside faulty module via front of cabinet.

17. Using cross-tip screwdriver, secure rear compartment cover of faulty module.

INSTALLATION STEPS:

1. Slide replacement module into position via front of cabinet.

2. Using cross-tip screwdriver, secure rear retaining hardware.

3. Using cross-tip screwdriver, open rear compartment cover.

4. Reconnect and, using ratchet and socket, secure filter electrical and ground lead connections.

5. Close and, using cross-tip screwdriver, secure rear compartment cover.

6. Using cross-tip screwdriver, secure front retaining hardware.

7. Position conduit/wiring in S01 junction box and, using spanner, secure conduit to box.

8. Reconnect and, using torque wrench and adapter, secure (36 in. lb) power cable leads to corresponding numbered terminals.

9. Install and, using cross-tip screwdriver, secure junction box cover.

10. Position and, using cross-tip screwdriver, secure air pressure switch with hardware previously removed.

11. At system Main Breaker Box, place cabinet input power breaker in ON position.

12. Place cabinet main power circuit breaker in ON position.

13. Place Power Control Module's (VC1) Power Control REMOTE/LOCAL switch in REMOTE position.

14. Restore cabinet logic power by pressing POWER ON switch at cabinet's Operator Control Panel.

15. Close and secure cabinet doors.

REPAIR VERIFICATION:

1. Ensure cabinet's Operator Control Panel indications are within normal operating limits:

   o All fault indicators extinguished

   o AC and POWER ON indicators illuminated

2. Assign resources back to operating system (see Maintenance Procedure 4.3).

3. Continue normal operation.

PROCEDURE 2.14

PURPOSE: This routine describes the removal and installation of Capacitor Module

PART NUMBER: 58052267-xxx
58059331-xxx
58060088-xxx

REQUIRED TOOLS

Hex-head wrench (4mm)
Cross-tip screwdriver

REQUIRED TEST EQUIPMENT/MATERIALS

Maintenance Procedure 4.1 - Isolating/Releasing System Resources
Maintenance Procedure 4.3 - Assigning System Resources

PRECAUTIONS: Strict compliance with all cautions and warnings is required to preclude injury and/or equipment damage.

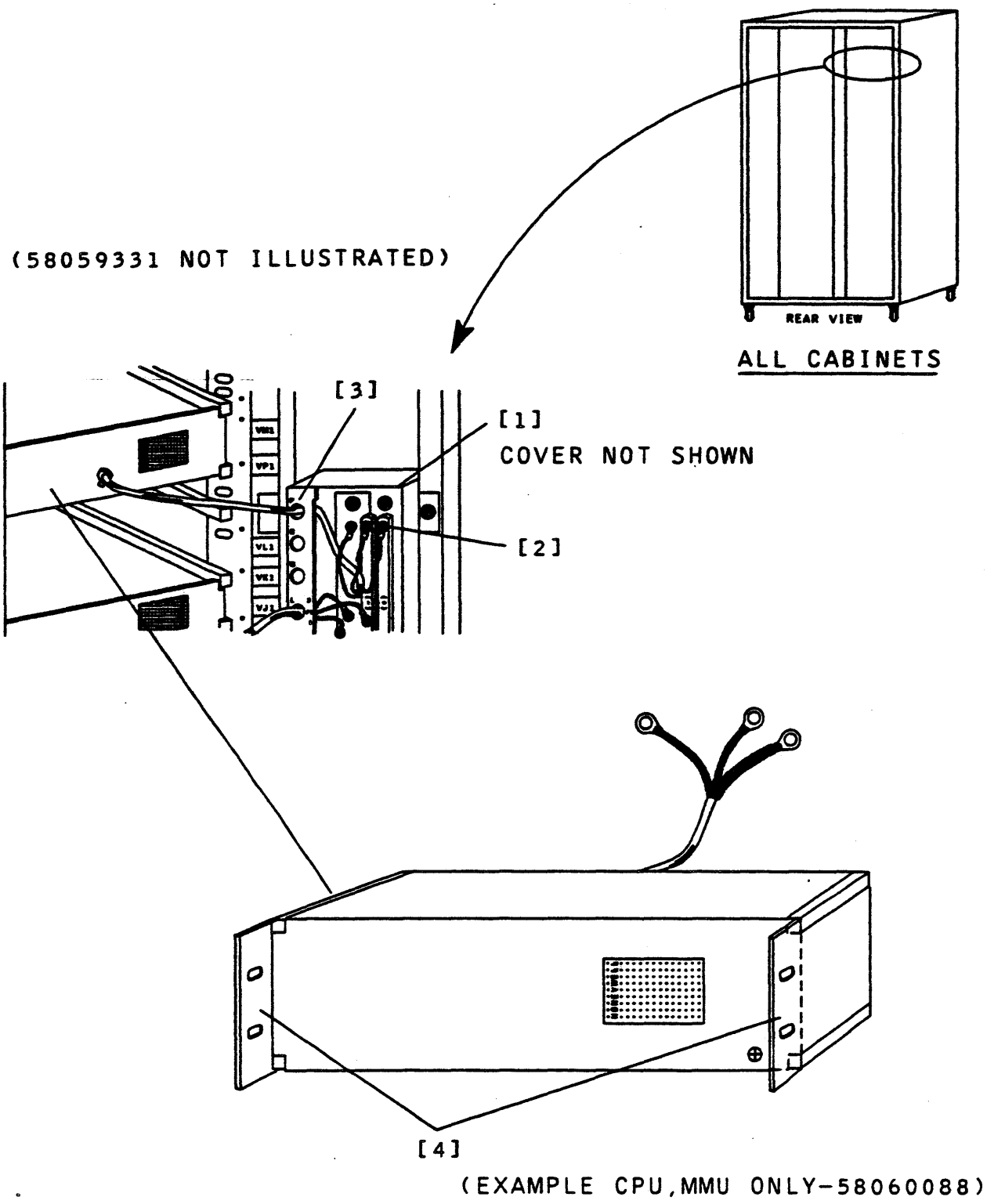

FIGURE 2.14-1. CAPACITOR MODULE REMOVAL/INSTALLATION

REMOVAL STEPS:

NOTE: This procedure requires all resources affected by faulty ORU be released or isolated from operating system prior to start of ORU repair.

1. Isolate (release) affected resources from operating system (see Maintenance Procedure 4.1).

2. Using hex-head wrench, release cabinet's front and rear door latch mechanisms and open doors.

3. Remove cabinet logic power by pressing POWER OFF switch on faulty cabinet's Operator Control Panel.

4. Place Power Control Module's (VC1) Power Control REMOTE/LOCAL switch in LOCAL position.

5. Place cabinet main power circuit breaker in OFF position.

WARNING

HAZARDOUS VOLTAGES ARE PRESENT WITHIN CAPACITOR MODULE. ALLOW A MINIMUM OF 5 MINUTES TO ELAPSE BEFORE ATTEMPTING MODULE MAINTENANCE OR PERSONAL INJURY MAY OCCUR.

6. Using cross-tip screwdriver, remove bus compartment cover at rear of cabinet (Figure 2.14-1, [1]).

WARNING

HAZARDOUS VOLTAGES MAY BE PRESENT WITHIN BUS AREA. TO PRECLUDE THE POSSIBILITY OF PERSONAL INJURY, USE VOLTMETER (300V DC SCALE TO START) TO VERIFY THAT CAPACITOR MODULE CHARGE HAS DECAYED TO ZERO.

7. Using cross-tip screwdriver, remove retaining hardware securing power leads to electrical bus and ground points (Figure 2.14-1, [2]).

8. Using hands, carefully pull power leads from bus compartment (Figure 2.14-1, [3]).

9. Using cross-tip screwdriver, remove module's front securing brackets retaining hardware (Figure 2.14-1, [4]).

10. Carefully slide module forward approximately 2 inches by pushing module via rear cabinet.

11. Remove and place aside faulty module via front of cabinet.

INSTALLATION STEPS:

1. Slide replacement module into position via front of cabinet.

2. Using cross-tip screwdriver, secure front bracket retaining hardware.

3. Using hands, route power leads into bus compartment.

4. Reconnect and, using cross-tip screwdriver, secure electrical and ground leads to respective terminals.

5. Position and, using cross-tip screwdriver, secure bus compartment cover with hardware previously removed.

6. Place cabinet main power circuit breaker in ON position.

7. Place Power Control Module's (VC1) Power Control REMOTE/LOCAL switch in REMOTE position.

8. Restore cabinet logic power by pressing POWER ON switch at cabinet's Operator Control Panel.

9. Close and secure cabinet doors.

REPAIR VERIFICATION:

1. Ensure cabinet's Operator Control Panel indications are within normal operating limits:

   o All fault indicators extinguished

   o AC and POWER ON indicators illuminated

2. Assign resources back to operating system (see Maintenance Procedure 4.3).

3. Continue normal operation.

PROCEDURE 2.15

PURPOSE: This routine describes the removal and installation of PWA (Oscillator Board)

PART NUMBER: 58059404-xxx

REQUIRED TOOLS

Hex-head wrench (4mm)
Cross-tip screwdriver
Diagonal cutters
Tie wraps

REQUIRED TEST EQUIPMENT/MATERIALS

Maintenance Procedure 4.1 -	Isolating/Releasing System Resources
Maintenance Procedure 3.4 -	Oscillator Board Adjustment (58059404-xxx)
Maintenance Procedure 4.2 -	Repair Verification (KWIK, NFTs, DPMs, etc.)
Maintenance Procedure 4.3 -	Assigning System Resources

PRECAUTIONS: Strict compliance with all cautions and warnings is required to preclude injury and/or equipment damage.

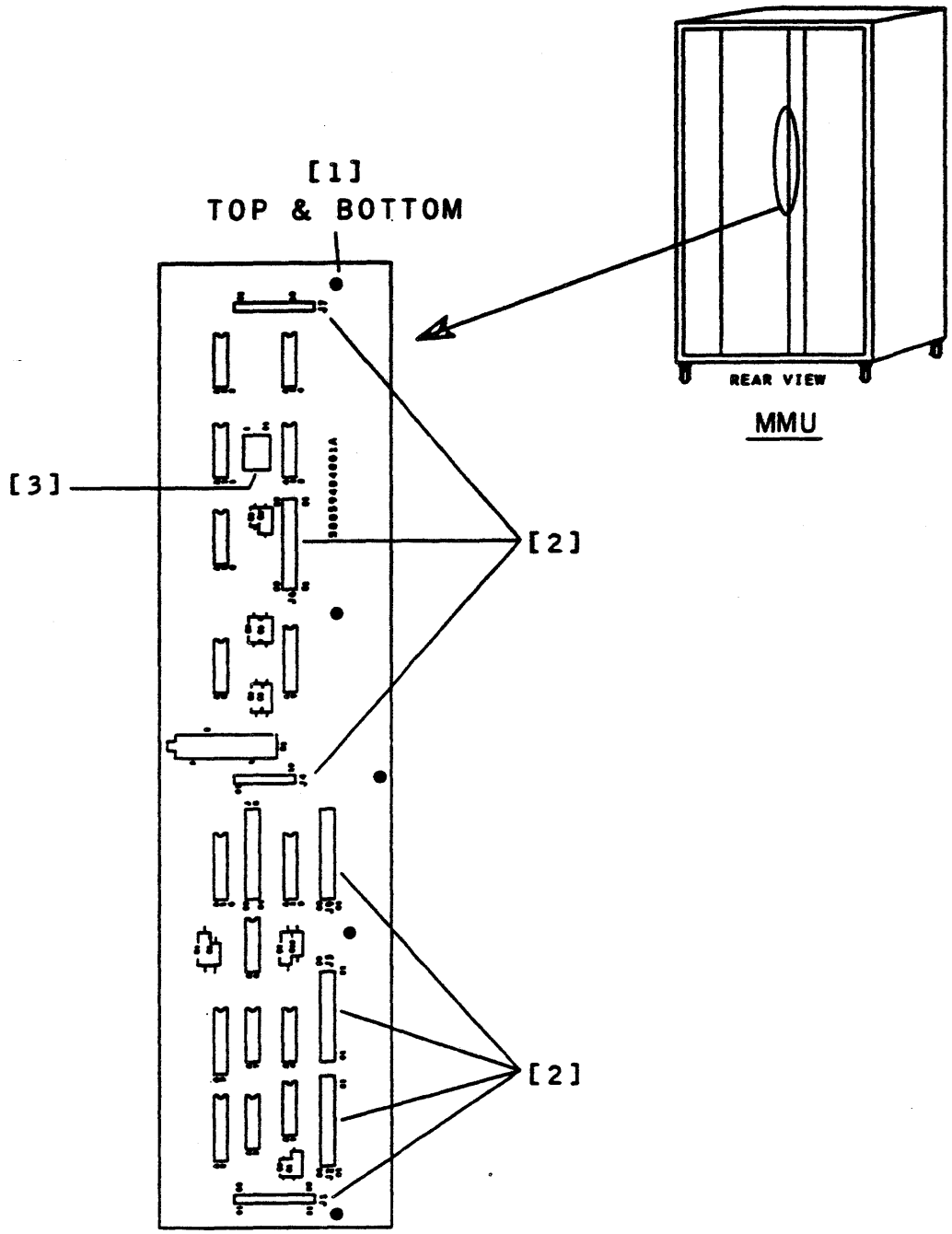

FIGURE 2.15-1. OSCILLATOR BOARD REMOVAL/INSTALLATION

REMOVAL STEPS:

NOTE: This procedure requires all resources affected by faulty ORU be released or isolated from operating system prior to start of ORU repair.

1. Isolate (release) affected resources from operating system (see Maintenance Procedure 4.1).

2. Using hex-head wrench, release cabinet's front and rear door latch mechanisms and open doors.

3. Remove cabinet logic power by pressing POWER OFF switch on faulty cabinet's Operator Control Panel.

4. Place Power Control Module's (VC1) Power Control REMOTE/LOCAL switch in LOCAL position.

5. Disconnect oscillator board connector plugs P1 through P7 (Figure 2.15-1, [1]).

6. Using diagonal cutters, remove all tie wraps connected to faulty oscillator board.

7. Using cross-tip screwdriver, remove retaining hardware and oscillator board (Figure 2.15-1, [2]).

8. On replacement board, set DIP switch (S01) to reflect identical setting as used by faulty oscillator board (Figure 2.15-1, [3]).

INSTALLATION STEPS:

1. Install and, using cross-tip screwdriver, secure replacement board with retaining hardware previously removed.

2. Reconnect connector plugs to corresponding numbered jacks.

3. Replace all tie wraps previously removed.

4. Place Power Control Module's (VC1) Power Control REMOTE/LOCAL switch in REMOTE position.

5. Restore cabinet logic power by pressing POWER ON switch at cabinet's Operator Control Panel.

6. Perform Maintenance Procedure 3.4 - Oscillator Board Adjustment (58059404-xxx).

7. Close and secure cabinet doors.

REPAIR VERIFICATION:

1. Ensure cabinet's Operator Control Panel indications are within normal operating limits:

   o All fault indicators extinguished

   o AC and POWER ON indicators illuminated

2. Perform Maintenance Procedure 4.2 - Repair Verification (KWIK, NFTs, DPMs, etc.) to determine the acceptability of the repair action taken.

3. Assign resources back to operating system (see Maintenance Procedure 4.3).

4. Continue normal operation.

PROCEDURE 2.16

PURPOSE: This routine describes the removal and installation of Control Module Regulator

PART NUMBER: 58059745-xxx

REQUIRED TOOLS

Hex-head wrench (4mm)
Cross-tip screwdriver

REQUIRED TEST EQUIPMENT/MATERIALS

Maintenance Procedure 4.1 -	Isolating/Releasing System Resources
Maintenance Procedure 3.5 -	Control Regulator Adjustment (58059745-xxx)
Maintenance Procedure 4.2 -	Repair Verification (KWIK, NFTs, DPMs, etc.)
Maintenance Procedure 4.3 -	Assigning System Resources

PRECAUTIONS: Strict compliance with all cautions and warnings is required to preclude injury and/or equipment damage.

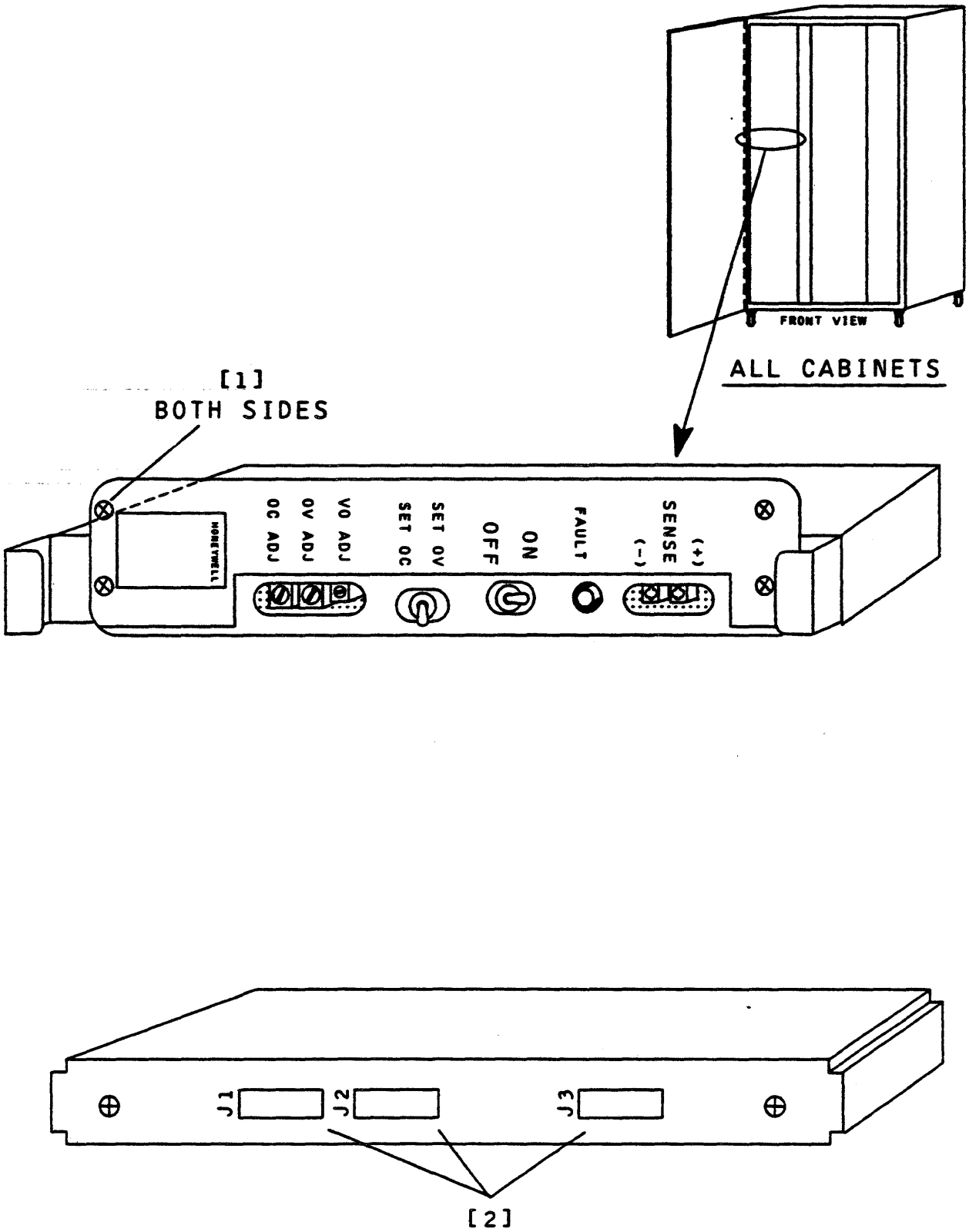

FIGURE 2.16-1. CONTROL REGULATOR MOD. REMOVAL/INSTALLATION

REMOVAL STEPS:

NOTE: This procedure requires all resources affected by faulty ORU be released or isolated from operating system prior to start of ORU repair.

1. Isolate (release) affected resources from operating system (see Maintenance Procedure 4.1).

2. Using hex-head wrench, release cabinet's front and rear door latch mechanisms and open doors.

3. Remove cabinet logic power by pressing POWER OFF switch on faulty cabinet's Operator Control Panel.

4. Place Power Control Module's (VC1) Power Control REMOTE/LOCAL switch in LOCAL position.

5. Using cross-tip screwdriver, remove module's front securing plate retaining hardware (Figure 2.16-1, [1]).

6. Disconnect rear harness connector plugs P1, P2, and P3 from faulty module (Figure 2.16, [2]).

7. Carefully slide module forward approximately 2 inches by pushing module via rear cabinet.

8. Remove and place aside faulty module via front of cabinet.

INSTALLATION STEPS:

1. Slide replacement module into position via front of cabinet.

2. Install and, using cross-tip screwdriver, secure front retaining hardware.

3. Reconnect connector plugs to corresponding numbered jacks.

4. Place Power Control Module's (VC1) Power Control REMOTE/LOCAL switch in REMOTE position.

5. Restore cabinet logic power by pressing POWER ON switch at cabinet's Operator Control Panel.

6. Perform Maintenance Procedure 3.5 - Control Regulator Adjustment (58059745-xxx).

7. Close and secure cabinet doors.

REPAIR VERIFICATION:

1. Ensure cabinet's Operator Control Panel indications are within normal operating limits:

   o All fault indicators extinguished

   o AC and POWER ON indicators illuminated

2. Perform Maintenance Procedure 4.2 - Repair Verification (KWIK, NFTs, DPMs, etc.) to determine the acceptability of the repair action taken.

3. Assign resources back to operating system (see Maintenance Procedure 4.3).

4. Continue normal operation.

PROCEDURE 2.17

PURPOSE: This routine describes the removal and installation of Power Control Module

PART NUMBER: 58037473-xxx
58059801-xxx
58060499-xxx

REQUIRED TOOLS

Hex-head wrench (4mm)
Cross-tip screwdriver

REQUIRED TEST EQUIPMENT/MATERIALS

Maintenance Procedure 4.1 -	Isolating/Releasing System Resources
Maintenance Procedure 3.6 -	Power Control Module Adjustment (58059801-xxx)
Maintenance Procedure 4.2 -	Repair Verification (KWIK, NFTs, DPMs, etc.)
Maintenance Procedure 4.3 -	Assigning System Resources

PRECAUTIONS: Strict compliance with all cautions and warnings is required to preclude injury and/or equipment damage.

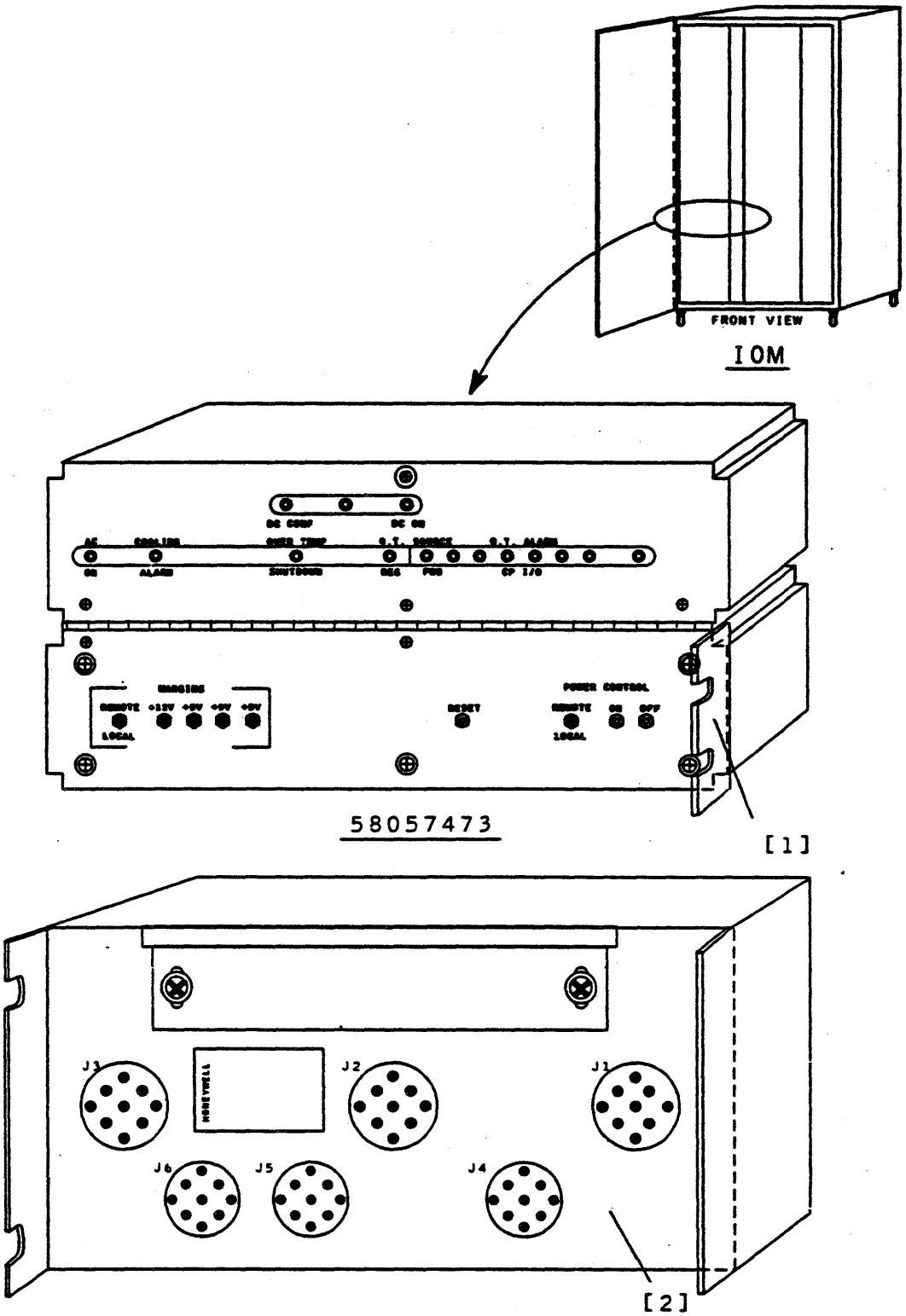

FIGURE 2.17-1. POWER CONTROL MODULE REMOVAL/INSTALLATION (SHEET 1 OF 3)

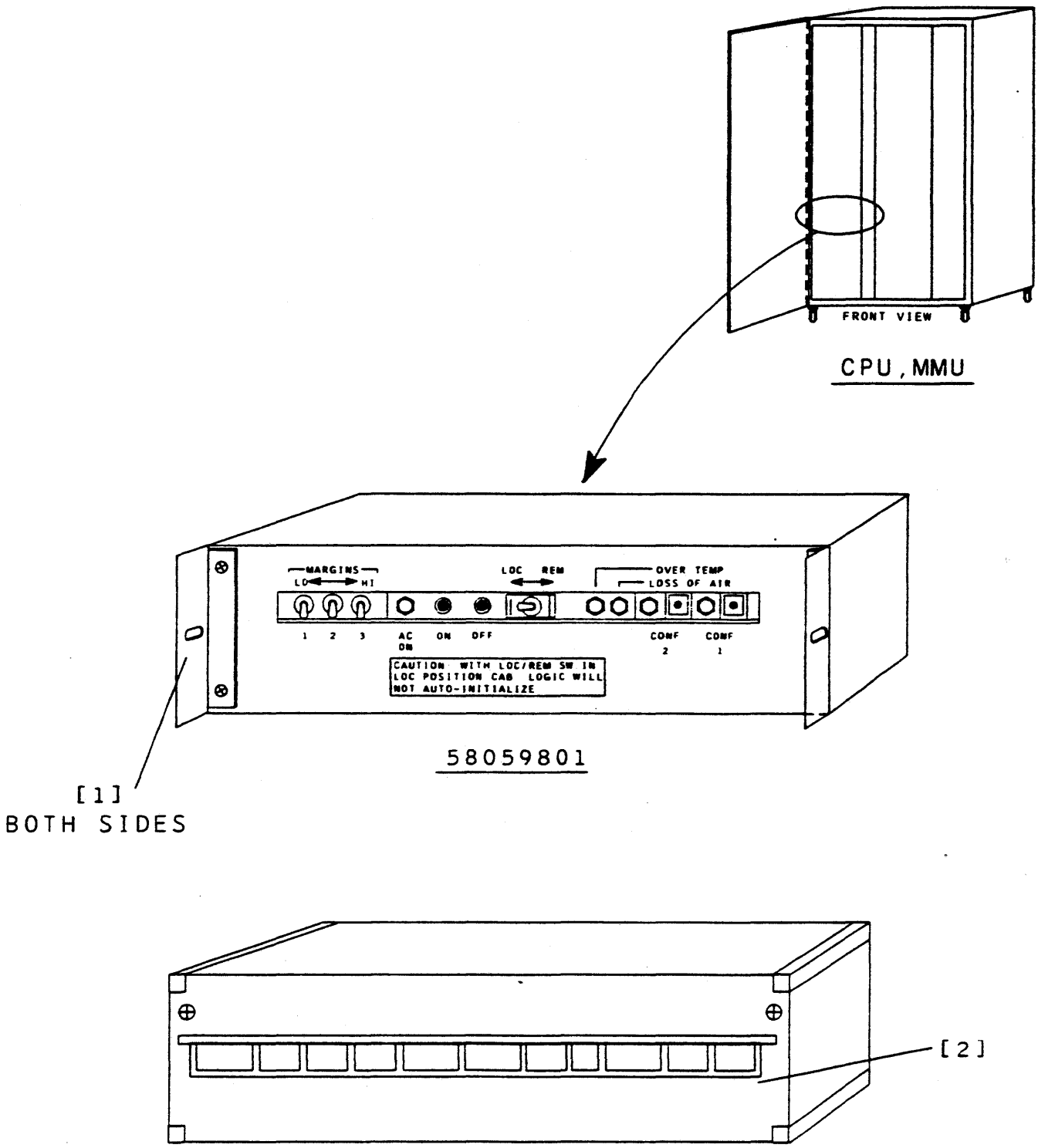

FIGURE 2.17-1. POWER CONTROL MODULE REMOVAL/INSTALLATION (SHEET 2 OF 3)

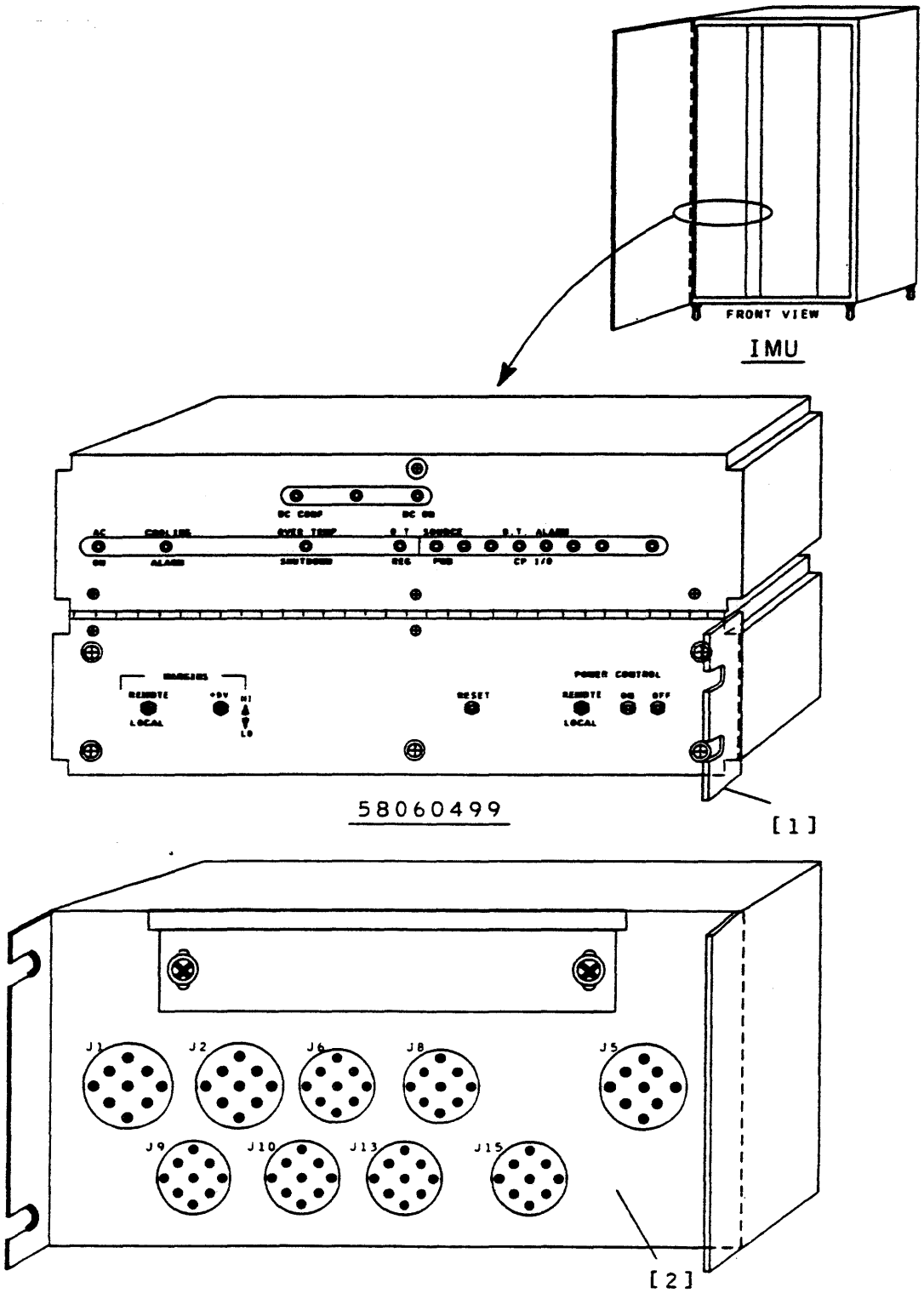

FIGURE 2.17-1. POWER CONTROL MODULE REMOVAL/INSTALLATION (SHEET 3 OF 3)

REMOVAL STEPS:

NOTE: This procedure requires all resources affected by faulty ORU be released or isolated from operating system prior to start of ORU repair.

1. Isolate (release) affected resources from operating system (see Maintenance Procedure 4.1).

2. Using hex-head wrench, release faulty cabinet's front and rear door latch mechanisms and open doors.

3. Remove cabinet logic power by pressing POWER OFF switch on faulty cabinet's Operator Control Panel.

4. Place Power Control Module's (VC1) Power Control REMOTE/LOCAL switch in LOCAL position.

5. Place cabinet main power circuit breaker in OFF position.

6. Using cross-tip screwdriver, remove module's front securing bracket retaining hardware (Figure 2.17-1, [1]).

7. Disconnect rear connector plugs (Figure 2.17-1, [2]).

8. Using cross-tip screwdriver, remove module's rear securing bracket retaining hardware (IF PRESENT).

9. Carefully slide module forward approx. 2 inches by pushing module via rear cabinet.

10. Remove and place aside faulty module via front of cabinet.

INSTALLATION STEPS:

1. Slide replacement module into position via front of cabinet.

2. Install and, using cross-tip screwdriver, secure front and rear (IF PRESENT) retaining hardware.

3. Reconnect rear connector plugs to corresponding numbered jacks.

4. Ensure Power Control Module's (VC1) MARGINS switches are in normal operating position, i.e., REMOTE and HI/LO switches centered.

5. Place Power Control Module's (VC1) Power Control REMOTE/LOCAL switch in REMOTE position.

6. Restore cabinet logic power by pressing POWER ON switch at cabinet's Operator Control Panel.

   NOTE: Perform Power Control Module adjustment (58059801-xxx) only.

7. Close and secure cabinet doors.

REPAIR VERIFICATION:

1. Ensure cabinet's Operator Control Panel indications are within normal operating limits:

   o All fault indicators extinguished

   o AC and POWER ON indicators illuminated

2. Perform Maintenance Procedure 4.2 - Repair Verification (KWIK, NFTs, DPMs, etc.) to determine the acceptability of the repair action taken.

3. Assign resources back to operating system (see Maintenance Procedure 4.3).

4. Continue normal operation.

PROCEDURE 2.18

PURPOSE: This routine describes the removal and installation of Filter Module

PART NUMBER: 58059763-xxx

REQUIRED TOOLS

Hex-head wrench (4mm)
Cross-tip screwdriver
Socket set
Torque wrench and adapter
Open-end wrench

REQUIRED TEST EQUIPMENT/MATERIALS

Maintenance Procedure 4.1 -	Isolating/Releasing System Resources
Maintenance Procedure 4.2 -	Repair Verification (KWIK, NFTs, DPMs, etc.)
Maintenance Procedure 4.3 -	Assigning System Resources

PRECAUTIONS: Strict compliance with all cautions and warnings is required to preclude injury and/or equipment damage.

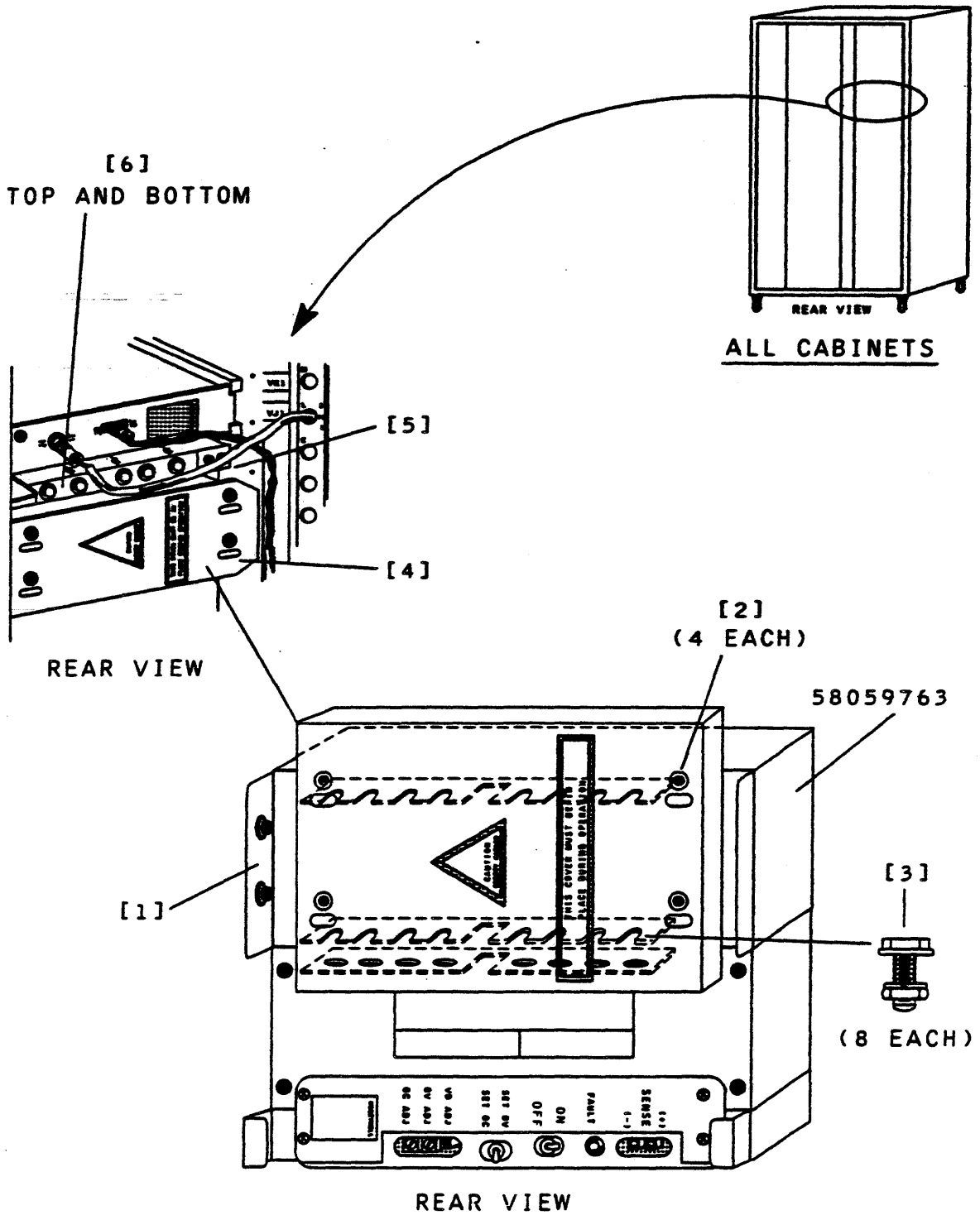

FIGURE 2.18-1. FILTER MODULE REMOVAL/INSTALLATION

REMOVAL STEPS:

NOTE: This procedure requires all resources affected by faulty ORU be released or isolated from operating system prior to start of ORU repair.

1. Isolate (release) affected resources from operating system (see Maintenance Procedure 4.1).

2. Using hex-head wrench, release cabinet's front and rear door latch mechanisms and open doors.

3. Remove cabinet logic power by pressing POWER OFF switch on faulty cabinet's Operator Control Panel.

4. Place Power Control Module's (VC1) Power Control REMOTE/LOCAL switch in LOCAL position.

5. Place cabinet main power circuit breaker in OFF position.

6. Using cross-tip screwdriver, remove module's front securing bracket retaining hardware (Figure 2.18-1, [1]).

7. Using cross-tip screwdriver, remove module's front bus cover and retaining hardware (Figure 2.18-1, [2]).

8. Using open-end wrench and socket set, remove front bus retaining hardware (Figure 2.18, [3]).

9. Using cross-tip screwdriver, remove module's rear bus safety shield and retaining hardware (Figure 2.18-1, [4]).

10. Using cross-tip screwdriver, remove rear bus electrical lead retaining hardware (Figure 2.18, [5]).

11. Using socket set, remove rear bus (VO+ and VO-) retaining hardware (Figure 2.18, [6]).

12. Carefully slide module forward approximately 2 inches by pushing module via rear cabinet.

13. Remove and place aside faulty module via front of cabinet.

INSTALLATION STEPS:

1. Slide replacement module into position (REAR VO+ BUS MUST BE TOWARD BOTTOM OF CABINET) via front of cabinet.

2. Hand start all front and rear electrical bus securing hardware.

3. Using torque wrench, tighten electrical bus connections to:

   Rear - xx in. lb Front - xx in. lb

4. Install and, using cross-tip screwdriver, secure front bracket retaining hardware.

5. Position and, using cross-tip screwdriver, secure front bus cover with hardware previously removed.

6. Install and, using cross-tip screwdriver, secure rear electrical leads (VO+ and VO-) to respective terminals with retaining hardware previously removed.

7. Position and, using cross-tip screwdriver, secure rear bus safety shield with hardware previously removed.

8. Place cabinet main power circuit breaker in ON position.

9. Place Power Control Module's (VC1) Power Control REMOTE/LOCAL switch in REMOTE position.

10. Restore cabinet logic power by pressing POWER ON switch at cabinet's Operator Control Panel.

11. Close and secure cabinet doors.

REPAIR VERIFICATION:

1. Ensure cabinet's Operator Control Panel indications are within normal operating limits:

   o All fault indicators extinguished

   o AC and POWER ON indicators illuminated

2. Perform Maintenance Procedure 4.2 - Repair Verification (KWIK, NFTs, DPMs, etc.) to determine the acceptability of the repair action taken.

3. Assign resources back to operating system (see Maintenance Procedure 4.3).

4. Continue normal operation.

PROCEDURE 2.19

PURPOSE: This routine describes the removal and installation of Power Regulator Module

PART NUMBER: 58059785-xxx

REQUIRED TOOLS

Hex-head wrench (4mm)
Cross-tip screwdriver
Socket set
Torque wrench and adapter
Open-end wrench

REQUIRED TEST EQUIPMENT/MATERIALS

Maintenance Procedure 4.1 -	Isolating/Releasing System Resources
Maintenance Procedure 4.2 -	Repair Verification (KWIK, NFTs, DPMs, etc.)
Maintenance Procedure 4.3 -	Assigning System Resources

PRECAUTIONS: Strict compliance with all cautions and warnings is required to preclude injury and/or equipment damage.

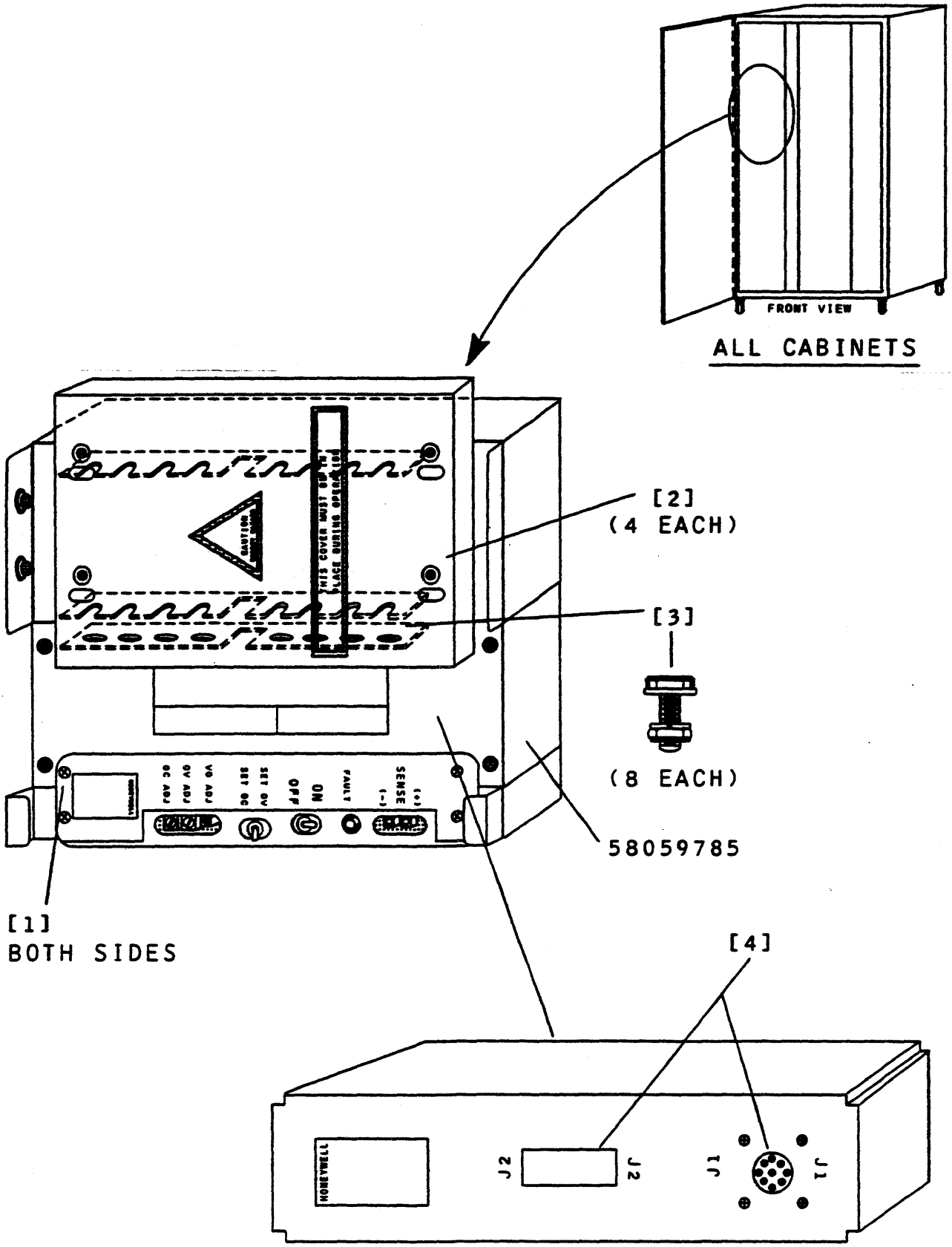

FIGURE 2.19-1. POWER REGULATOR MODULE REMOVAL/INSTALLATION

REMOVAL STEPS:

NOTE: This procedure requires all resources affected by faulty ORU be released or isolated from operating system prior to start of ORU repair.

1. Isolate (release) affected resources from operating system (see Maintenance Procedure 4.1).

2. Using hex-head wrench, release cabinet's front and rear door latch mechanisms and open doors.

3. Remove cabinet logic power by pressing POWER OFF switch on faulty cabinet's Operator Control Panel.

4. Place Power Control Module's (VC1) Power Control REMOTE/LOCAL switch in LOCAL position.

5. Place cabinet main power circuit breaker in OFF position.

6. Using cross-tip screwdriver, remove Regulator Control module's front mounting strap (face plate) retaining hardware and remove strap (Figure 2.19-1, [1]).

7. Using cross-tip screwdriver, remove filter module's front electrical bus cover plate and retaining hardware (Figure 2.19-1, [2]).

8. Using open-end wrench and socket set, remove bus retaining hardware securing filter module to regulator (Figure 2.19-1, [3]).

9. Disconnect electrical harness plugs P1 and P2 from rear of regulator module (Figure 2.19-1, [4]).

10. Carefully slide module forward approximately 2 inches by pushing module via rear cabinet.

11. Remove and place aside faulty module via front of cabinet.

INSTALLATION STEPS:

1. Slide replacement module into position via front of cabinet.

2. Hand start all electrical bus securing hardware.

3. Using torque wrench, tighten (xx in. lb) electrical bus connections.

4. Position and, using cross-tip screwdriver, secure filter module's front bus cover with hardware previously removed.

5. Position and, using cross-tip screwdriver, secure Regulator Control module's front mounting strap (face plate) with retaining hardware previously removed.

6. Reconnect rear connector plugs to corresponding numbered jacks..

7. Place cabinet main power circuit breaker in ON position.

8. Place Power Control Module's (VC1) Power Control REMOTE/LOCAL switch in REMOTE position.

9. Restore cabinet logic power by pressing POWER ON switch at cabinet's Operator Control Panel.

10. Close and secure cabinet doors.

REPAIR VERIFICATION:

1. Ensure cabinet's Operator Control Panel indications are within normal operating limits:

   o All fault indicators extinguished

   o AC and POWER ON indicators illuminated

2. Perform Maintenance Procedure 4.2 - Repair Verification (KWIK, NFTs, DPMs, etc.) to determine the acceptability of the repair action taken.

3. Assign resources back to operating system (see Maintenance Procedure 4.3).

4. Continue normal operation.

PROCEDURE 2.20

PURPOSE: This routine describes the removal and installation of Power Entry Module

PART NUMBER: 58052063-xxx
58060041-xxx
58060353-xxx

REQUIRED TOOLS

Hex-head wrench (4mm)
Cross-tip screwdriver
Socket set

REQUIRED TEST EQUIPMENT/MATERIALS

Digital Voltmeter
Maintenance Procedure 4.1 - Isolating/Releasing System Resources
Maintenance Procedure 4.3 - Assigning System Resources

PRECAUTIONS: Strict compliance with all cautions and warnings is required to preclude injury and/or equipment damage.

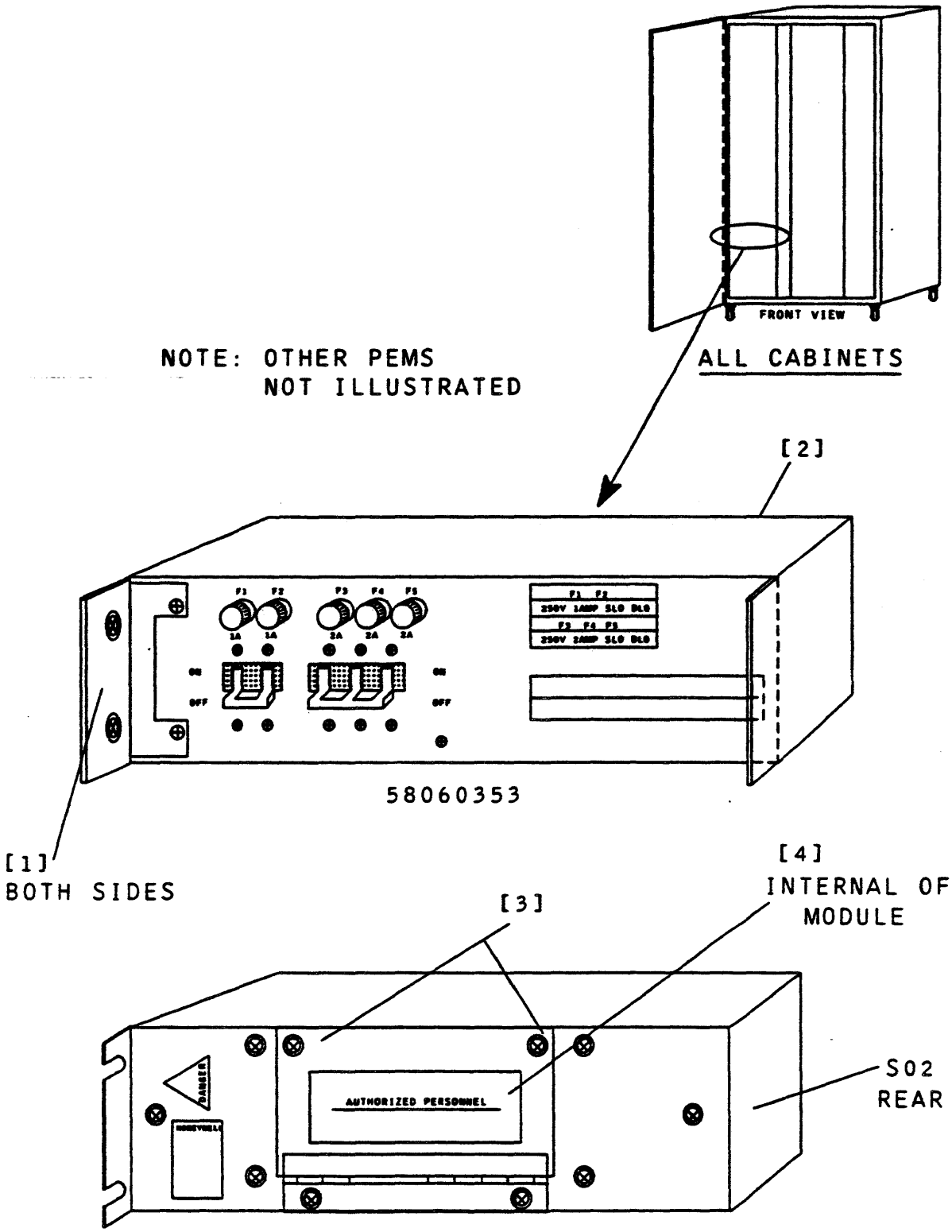

FIGURE 2.20-1. POWER ENTRY MODULE REMOVAL/INSTALLATION

REMOVAL STEPS:

NOTE: This procedure requires all resources affected by faulty ORU be released or isolated from operating system prior to start of ORU repair.

1. Isolate (release) affected resources from operating system (see Maintenance Procedure 4.1).

2. Using hex-head wrench, release cabinet's front and rear door latch mechanisms and open doors.

3. Remove cabinet logic power by pressing POWER OFF switch on faulty cabinet's Operator Control Panel.

4. Place Power Control Module's (VC1) Power Control REMOTE/LOCAL switch in LOCAL position.

5. Place cabinet main power circuit breaker in OFF position.

6. Using cross-tip screwdriver, remove faulty module's front bracket retaining hardware (Figure 2.20-1, [1]).

7. Disconnect connector plugs P1, P2, and P3 from rear of faulty module (Figure 2.20-1, [2]).

8. Using a cross-tip screwdriver, open Circuit Breaker Module (S02) rear compartment cover (Figure 2.20-1, [3]).

WARNING

HAZARDOUS VOLTAGES MAY BE PRESENT WITHIN THIS MODULE. EXERCISE EXTREME CARE AS TO PRECLUDE PERSONAL INJURY. VERIFY ABSENCE OF POWER USING VOLTMETER.

9. Using a ratchet and socket, disconnect power and ground lead connections between S02 and S03 (Figure 2.20-1, [4]).

10. Carefully slide module forward approximately 2 inches by pushing module via rear cabinet.

11. Remove and place aside faulty module via front of cabinet.

INSTALLATION STEPS:

1. Slide replacement module into position via front of cabinet.

2. Using cross-tip screwdriver, secure front retaining hardware.

3. Reconnect and, using ratchet and socket, secure rear power and ground connections between S02 and S03.

4. Close and, using a cross-tip screwdriver, secure rear compartment cover (S02).

5. Reconnect all Power Entry Module rear connector plugs.

6. Place cabinet main power, BLOWER, and REGULATOR circuit breakers in ON position.

7. Place Power Control Module's (VC1) Power Control REMOTE/LOCAL switch in REMOTE position.

8. Restore cabinet logic power by pressing POWER ON switch at cabinet's Operator Control Panel.

9. Close and secure cabinet doors.

REPAIR VERIFICATION:

1. Ensure cabinet's Operator Control Panel indications are within normal operating limits:

   o All fault indicators extinguished

   o AC and POWER ON indicators illuminated

3. Assign resources back to operating system (see Maintenance Procedure 4.3).

4. Continue normal operation.

PROCEDURE 2.21

PURPOSE: This routine describes the removal and installation of IMU PWA Board

PART NUMBER:

58060513-xxx	58063210-xxx	58076300-xxx
58060519-xxx	58075650-xxx	58076310-xxx
58060523-xxx	58075720-xxx	58076330-xxx
58060783-xxx	58075740-xxx	58076340-xxx
58060787-xxx	58075830-xxx	58076360-xxx
58060791-xxx	58076270-xxx	58076370-xxx
58063160-xxx	58076280-xxx	58078190-xxx
58063170-xxx	58076290-xxx	58089100-xxx
58063180-xxx		

REQUIRED TOOLS

Hex-head wrench (4mm)
Board extractor.

REQUIRED TEST EQUIPMENT/MATERIALS

Maintenance Procedure 4.1 - Isolating/Releasing System Resources
Maintenance Procedure 4.2 - Repair Verification (KWIK, NFTs, DPMs, etc.)
Maintenance Procedure 4.3 - Assigning System Resources

PRECAUTIONS: Strict compliance with all cautions and warnings is required to preclude injury and/or equipment damage.

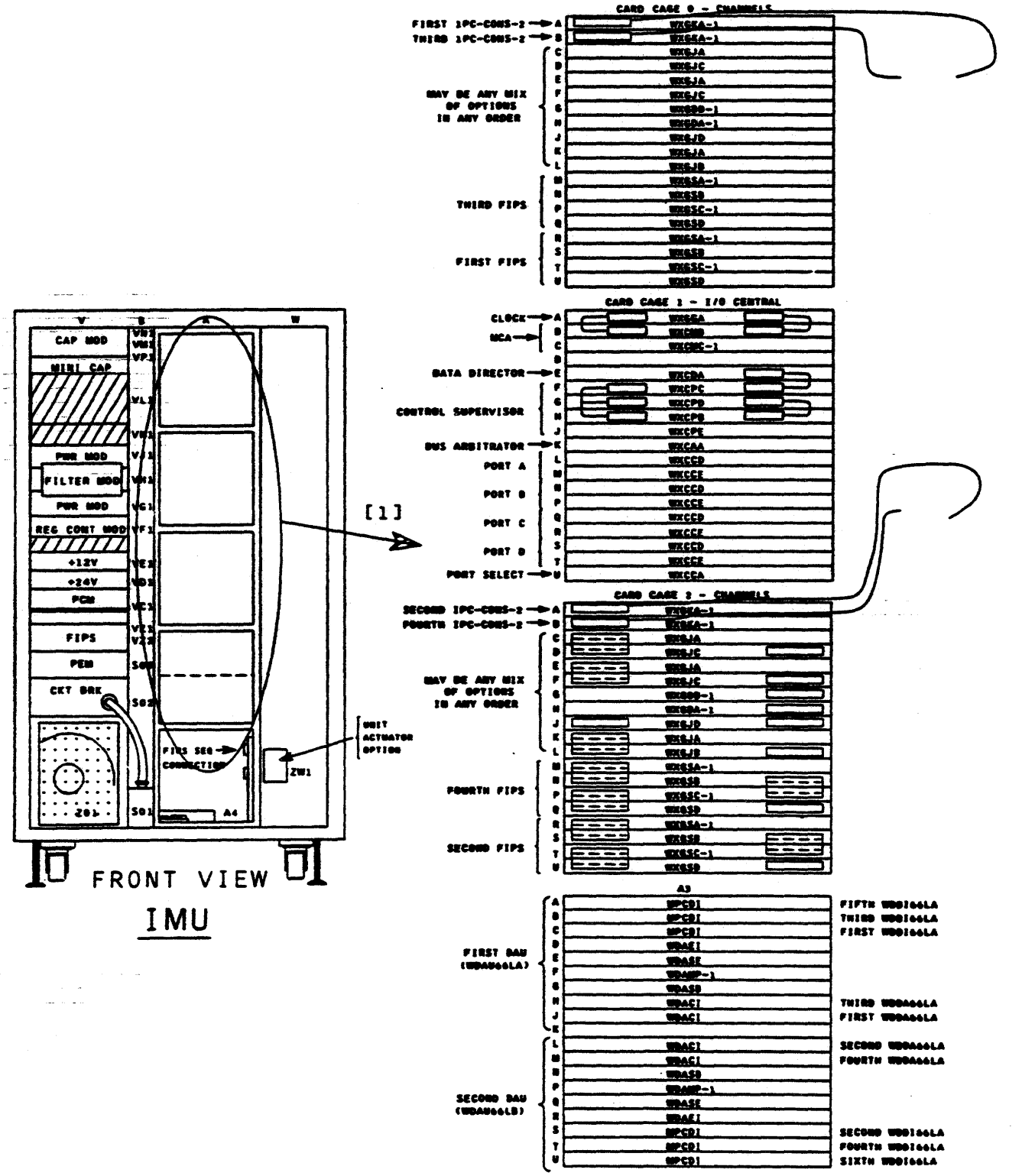

FIGURE 2.21-1. IMU LOGIC BOARD REMOVAL/INSTALLATION

REMOVAL STEPS:

NOTE: This procedure requires all resources affected by faulty ORU be released or isolated from operating system prior to start of ORU repair.

1. Isolate (release) affected resources from operating system (see Maintenance Procedure 4.1).

2. Using hex-head wrench, release IMU cabinet's front door latch mechanisms and open doors.

3. Remove cabinet logic power by pressing POWER OFF switch on faulty cabinet's Operator Control Panel.

4. Place Power Control Module's (VC1) Power Control REMOTE/LOCAL switch in LOCAL position.

5. Using logic board location diagram, identify position of faulty ORU (Figure 2.21-1, [1]).

6. Using hands, disconnect faulty logic board's edge connectors.

7. Using board extractor, remove defective logic board.

INSTALLATION STEPS:

1. Slide replacement logic board into position via front of cabinet.

2. Using hands, carefully press logic board into fully installed position.

3. Reconnect board edge connectors to respective positions.

4. Place Power Control Module's (VC1) Power Control REMOTE/LOCAL switch in REMOTE position.

5. Restore cabinet logic power by pressing POWER ON switch at cabinet's Operator Control Panel.

6. Close and secure cabinet doors.

REPAIR VERIFICATION:

1. Ensure cabinet's Operator Control Panel indications are within normal operating limits:

   o All fault indicators extinguished

   o AC and POWER ON indicators illuminated

2. Perform Maintenance Procedure 4.2 - Repair Verification (KWIK, NFTs, DPMs, etc.) to determine the acceptability of the repair action taken.

3. Assign resources back to operating system (see Maintenance Procedure 4.3).

4. Continue normal operation.

PROCEDURE 2.22

PURPOSE: This routine describes the removal and installation of Channel Clock Distribution Board

PART NUMBER: 58060810-xxx

REQUIRED TOOLS

Hex-head wrench (4mm)
Cross-tip screwdriver

REQUIRED TEST EQUIPMENT/MATERIALS

Maintenance Procedure 4.1 -	Isolating/Releasing System Resources
Maintenance Procedure 4.2 -	Repair Verification (KWIK, NFTs, DPMs, etc.)
Maintenance Procedure 4.3 -	Assigning System Resources

PRECAUTIONS: Strict compliance with all cautions and warnings is required to preclude injury and/or equipment damage.

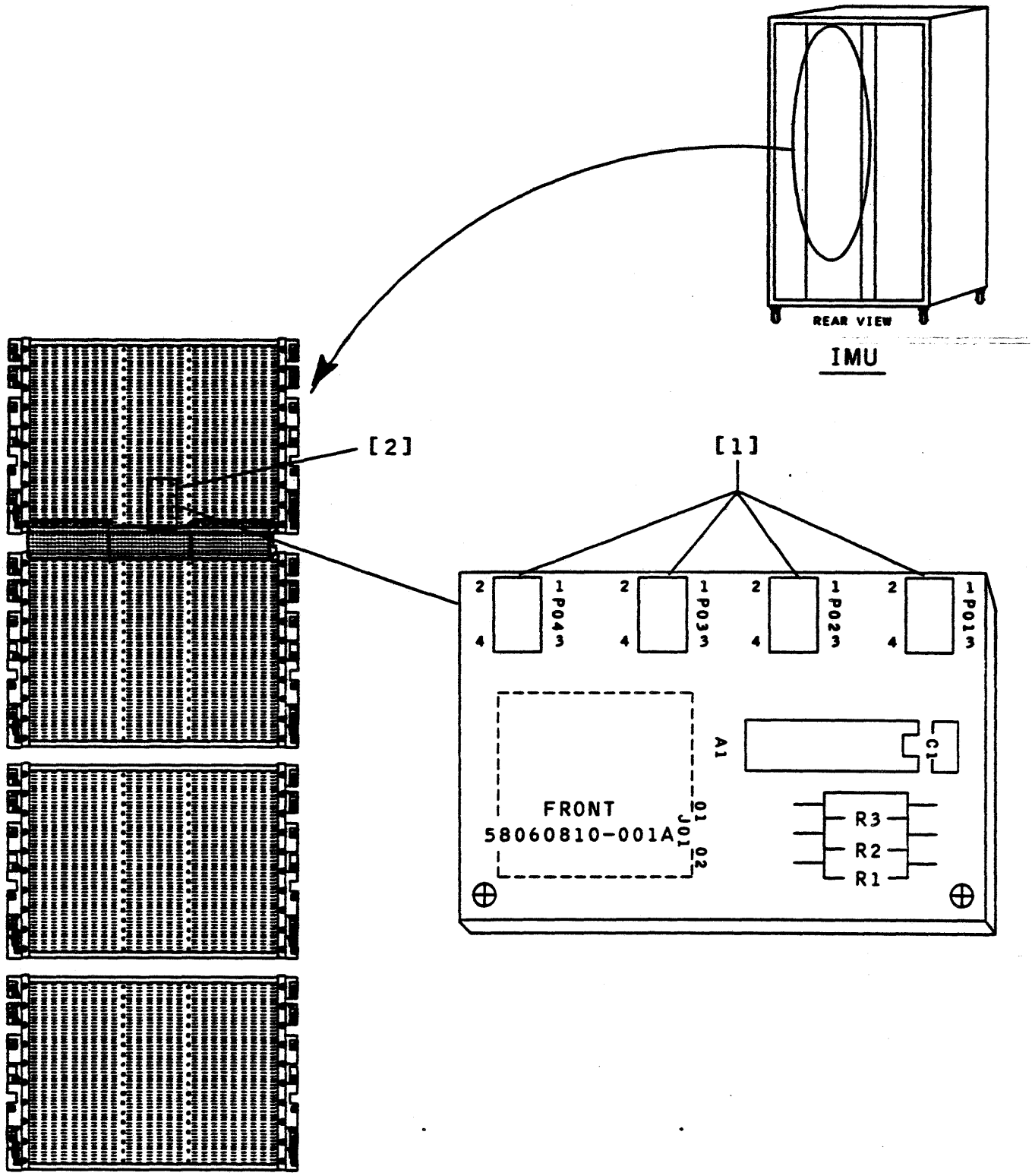

FIGURE 2.22-1. CLOCK DISTRIBUTION PWA REMOVAL/INSTALLATION

REMOVAL STEPS:

NOTE: This procedure requires all resources affected by faulty ORU be released or isolated from operating system prior to start of ORU repair.

1. Isolate (release) affected resources from operating system (see Maintenance Procedure 4.1).

2. Using hex-head wrench, release faulty cabinet's front and rear door latch mechanisms and open doors.

3. Remove cabinet logic power by pressing POWER OFF switch on faulty cabinet's Operator Control Panel.

4. Place Power Control Module's (VC1) Power Control REMOTE/LOCAL switch in LOCAL position.

5. Using hands, disconnect plug from faulty logic board (Figure 2.22-1, [1]).

6. Using hands, remove faulty board from backpanel assembly (Figure 2.22-1, [2]).

INSTALLATION STEPS:

1. Position and, using hands, carefully press logic board into fully installed position on backpanel assembly.

2. Reconnect connector to respective position.

3. Place Power Control Module's (VC1) Power Control REMOTE/LOCAL switch in REMOTE position.

4. Restore cabinet logic power by pressing POWER ON switch at cabinet's Operator Control Panel.

5. Close and secure cabinet doors.

REPAIR VERIFICATION:

1. Ensure cabinet's Operator Control Panel indications are within normal operating limits:

   o All fault indicators extinguished

   o AC and POWER ON indicators illuminated

2. Perform Maintenance Procedure 4.2 - Repair Verification (KWIK, NFTs, DPMs, etc.) to determine the acceptability of the repair action taken.

3. Assign resources back to operating system (see Maintenance Procedure 4.3).

4. Continue normal operation.

PROCEDURE 2.23

PURPOSE: This routine describes the removal and installation of FIPS Sequencer

PART NUMBER: 58060900-xxx

REQUIRED TOOLS

Hex-head wrench (4mm)
Cross-tip screwdriver

REQUIRED TEST EQUIPMENT/MATERIALS

Maintenance Procedure 4.1 -	Isolating/Releasing System Resources
Maintenance Procedure 4.2 -	Repair Verification (KWIK, NFTs, DPMs, etc.)
Maintenance Procedure 4.3 -	Assigning System Resources

PRECAUTIONS: Strict compliance with all cautions and warnings is required to preclude injury and/or equipment damage.

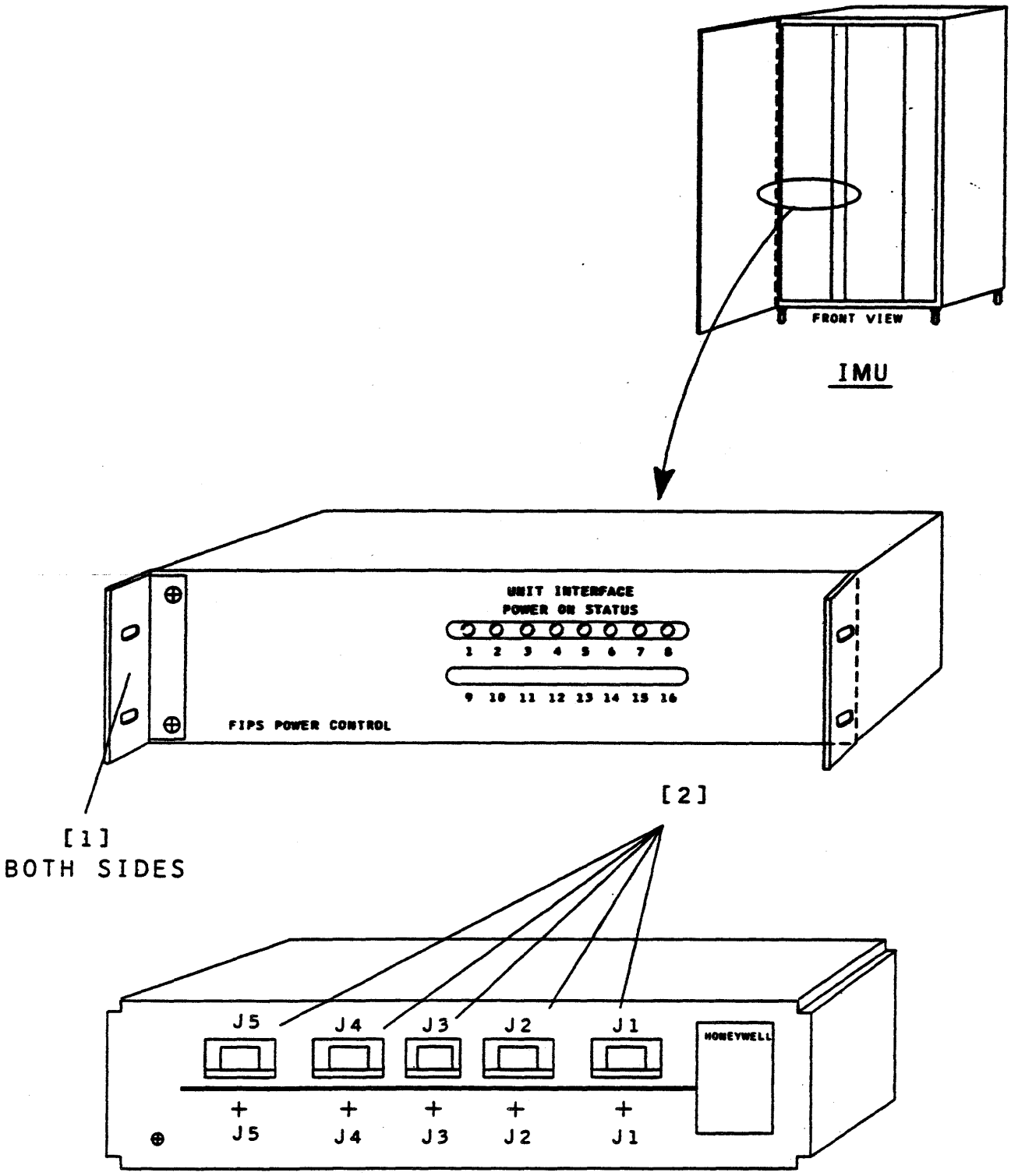

FIGURE 2.23-1. FIPS SEQUENCER MODULE REMOVAL/INSTALLATION

REMOVAL STEPS:

NOTE: This procedure requires all resources affected by faulty ORU be released or isolated from operating system prior to start of ORU repair.

1. Isolate (release) affected resources from operating system (see Maintenance Procedure 4.1).

2. Using hex-head wrench, release MMU cabinet's front and rear door latch mechanisms and open doors.

3. Remove regulator's output power by pressing POWER OFF switch at faulty cabinet's Operator Control Panel.

4. Place Power Control Module's (VC1) Power Cohtrol REMOTE/LOCAL switch in LOCAL position.

5. Using cross-tip screwdriver, remove regulator's front retaining hardware (Figure 2.23-1, [1]).

6. Disconnect connector plugs from rear of faulty module (Figure 2.23-1, [2]).

7. Carefully slide faulty module slightly forward by pushing module via rear of cabinet.

8. Remove and place aside faulty module via front of cabinet.

INSTALLATION STEPS:

1. Slide replacement module into position via front of cabinet.

2. Install and, using cross-tip screwdriver, secure front retaining hardware.

3. Reconnect rear connector plugs to corresponding numbered jacks.

4. Place Power Control Module's Power Control REMOTE/LOCAL switch in REMOTE position.

5. Close and secure cabinet doors.

REPAIR VERIFICATION:

1. Ensure cabinet's Operator Control Panel indications are within normal operating limits:

   o All fault indicators extinguished

   o AC and POWER ON indicators illuminated

2. Perform Maintenance Procedure 4.2 - Repair Verification (KWIK, NFTs, DPMs, etc.) to determine the acceptability of the repair action taken.

3. Assign resources back to operating system (see Maintenance Procedure 4.3).

4. Continue normal operation.

PROCEDURE 2.24

PURPOSE: This routine describes the removal and installation of Fuse Cartridge (ALL)

PART NUMBER:

43B111736P7	876B216P23
43B111736P9	877B293P19
43B111736P10	877B293P23
58020447-003	

REQUIRED TOOLS

Hex-head wrench (4mm)
Cross-tip screwdriver
Fuse puller
Multimeter

REQUIRED TEST EQUIPMENT/MATERIALS

Maintenance Procedure 4.1 -	Isolating/Releasing System Resources
Maintenance Procedure 4.2 -	Repair Verification (KWIK, NFTs, DPMs, etc.)
Maintenance Procedure 4.3 -	Assigning System Resources

PRECAUTIONS: Strict compliance with all cautions and warnings is required to preclude injury and/or equipment damage.

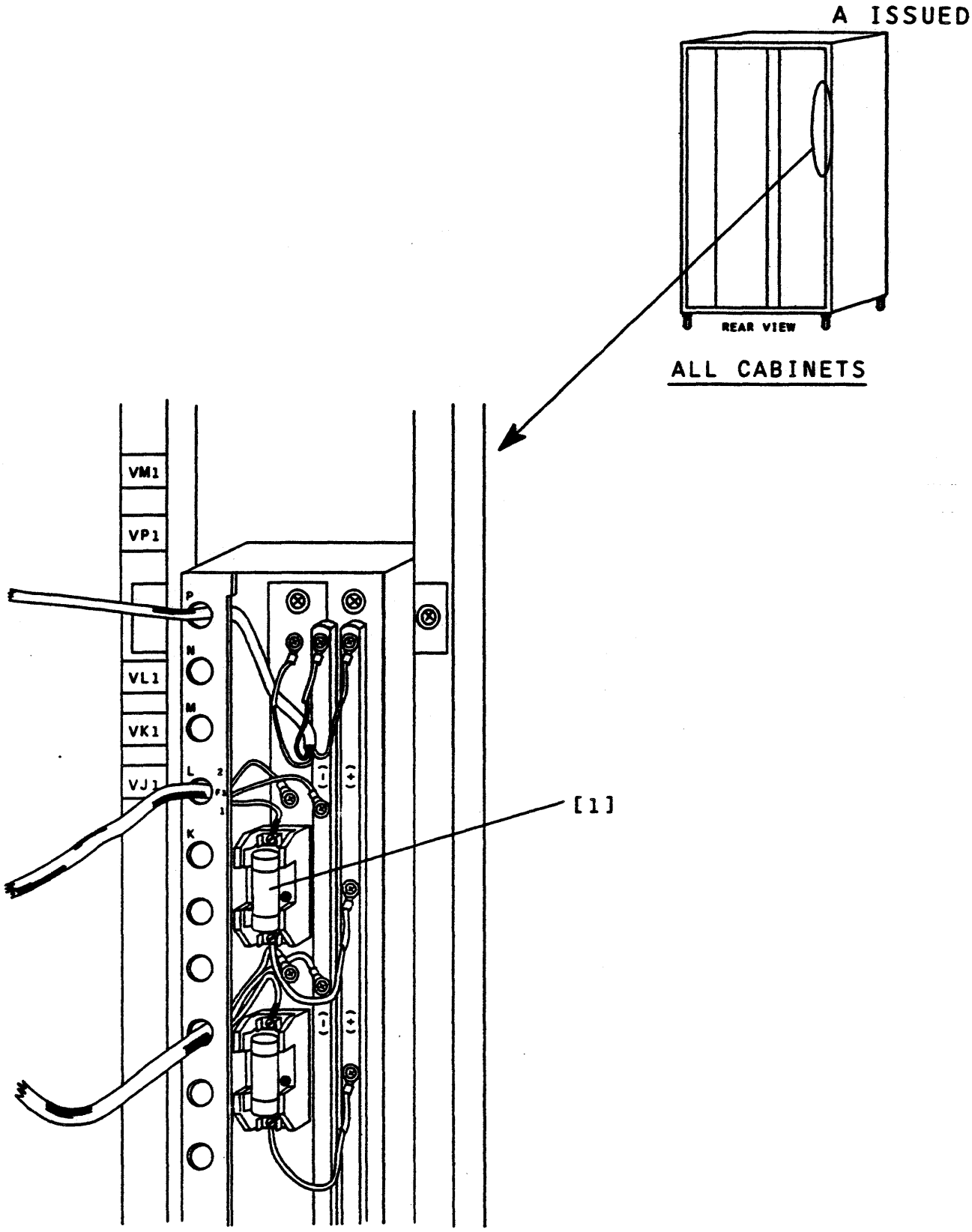

PLANAR REGULATOR (BUS ENCLOSURE)

FIGURE 2.24-1. FUSE REMOVAL/INSTALLATION (SHEET 1 OF 7)

ALL PLANAR POWER COMPONENTS
ARE FUSED IN BUS ENCLOSURE.
(REFER TO PREVIOUS DRAWING)

FILTER MODULE (58059763-XXX)

FIGURE 2.24-1. FUSE REMOVAL/INSTALLATION (SHEET 2 OF 7)

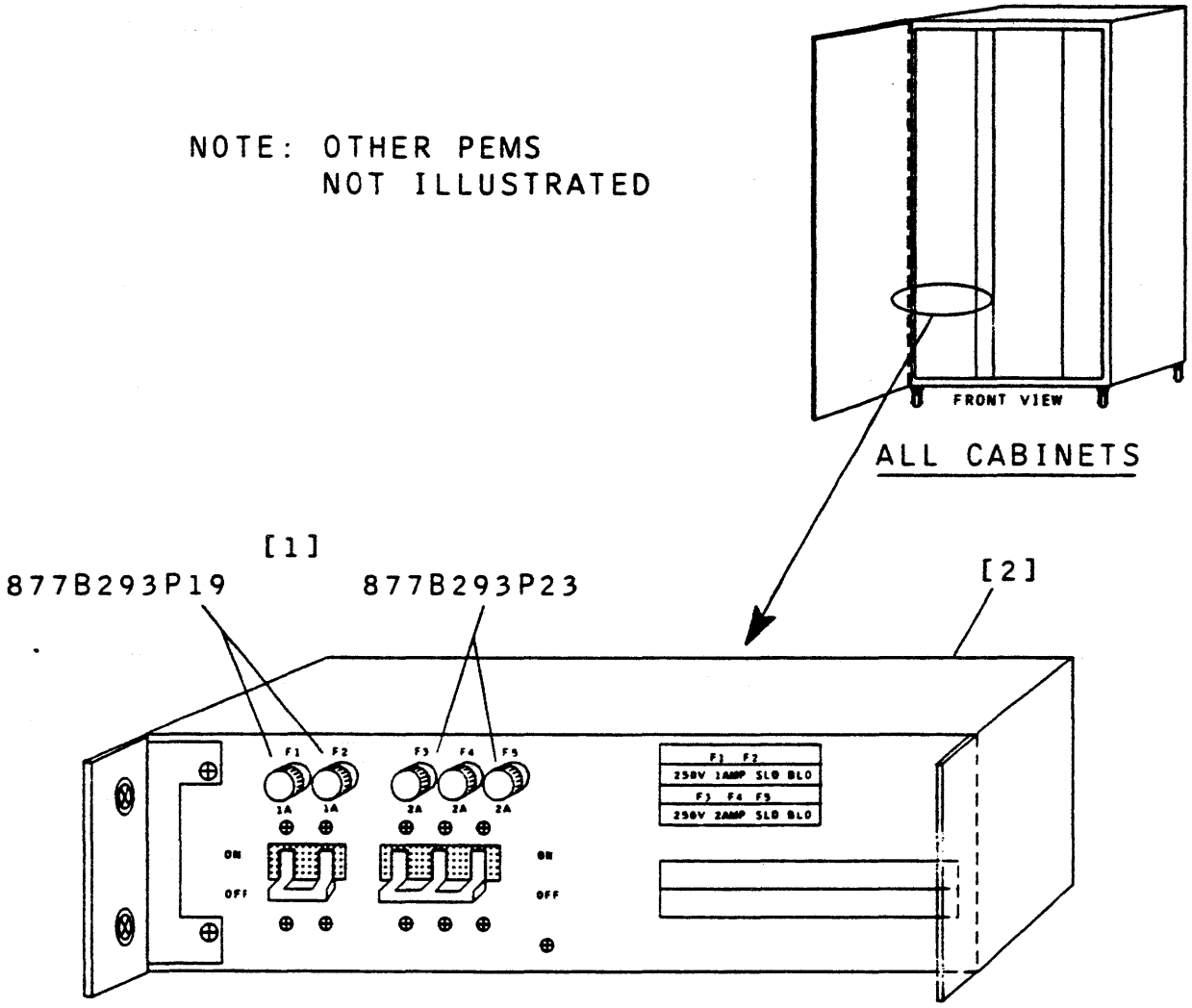

POWER ENTRY MODULES (58052063-XXX/58060353-XXX/58060041-XXX)

FIGURE 2.24-1. FUSE REMOVAL/INSTALLATION (SHEET 3 OF 7)

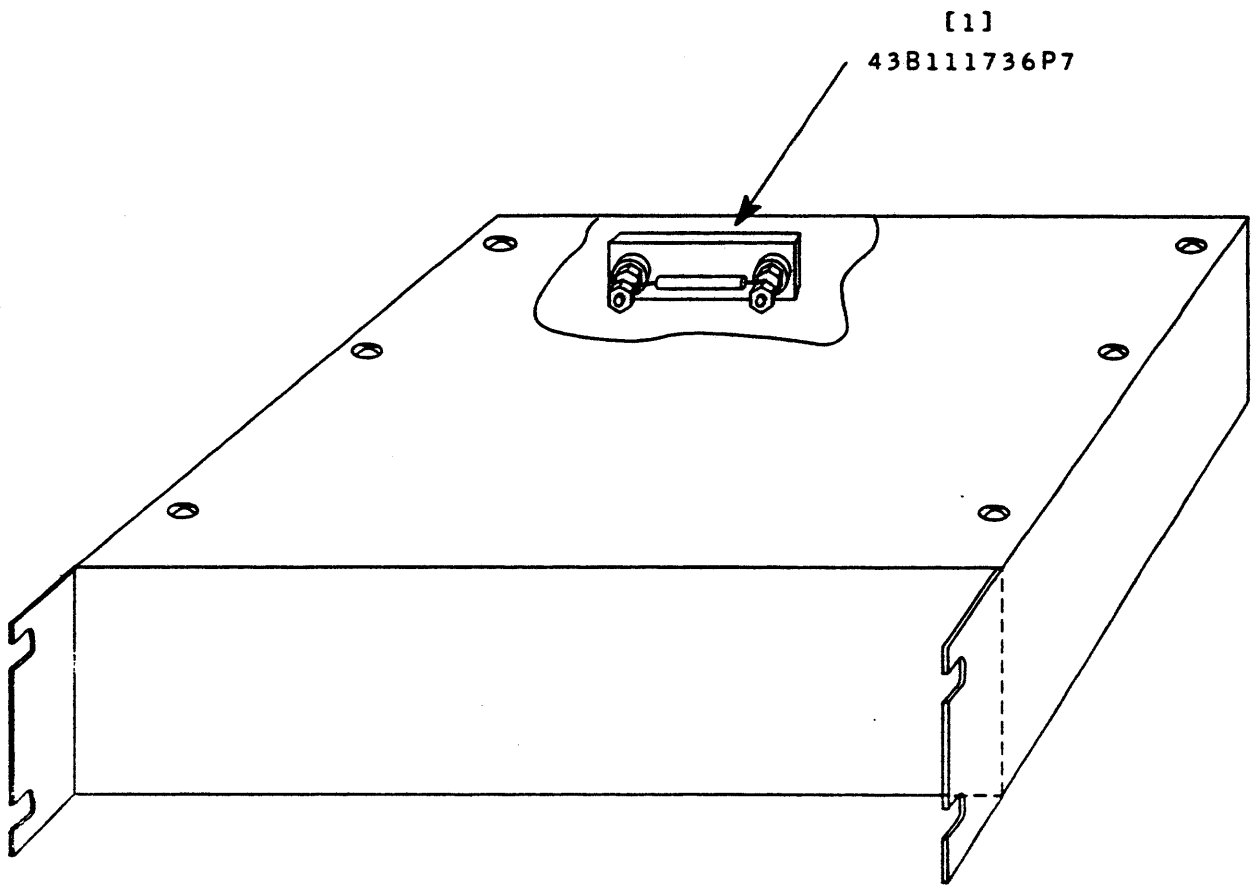

SOFT START MODULE (58052618-XXX)

FIGURE 2.24-1. FUSE REMOVAL/INSTALLATION (SHEET 4 OF 7)

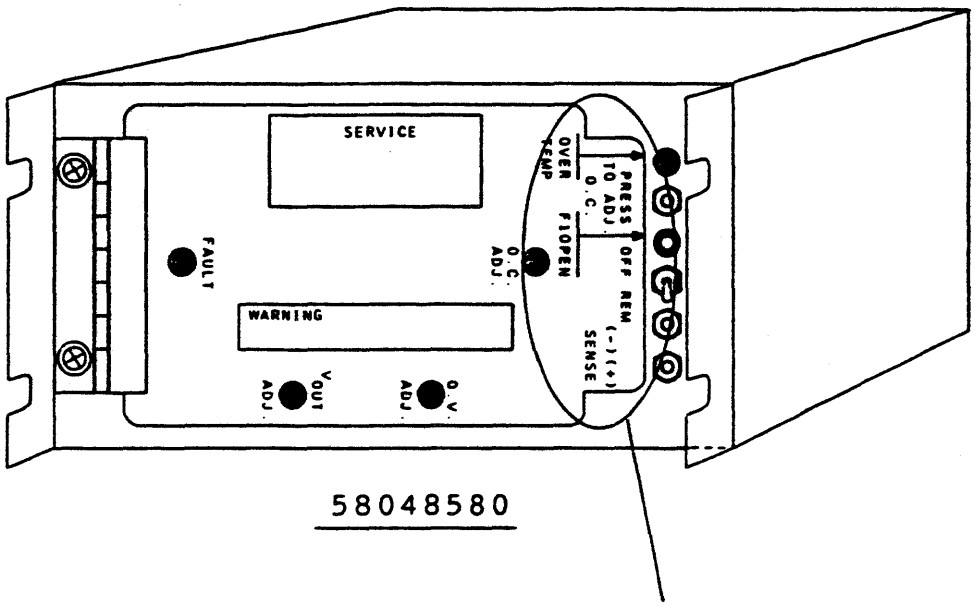

43B111736P9
(LOCATED BEHIND
HINGED PANEL)

POWER REG. MODULE (58048580-XXX)

FIGURE 2.24-1. FUSE REMOVAL/INSTALLATION (SHEET 5 OF 7)

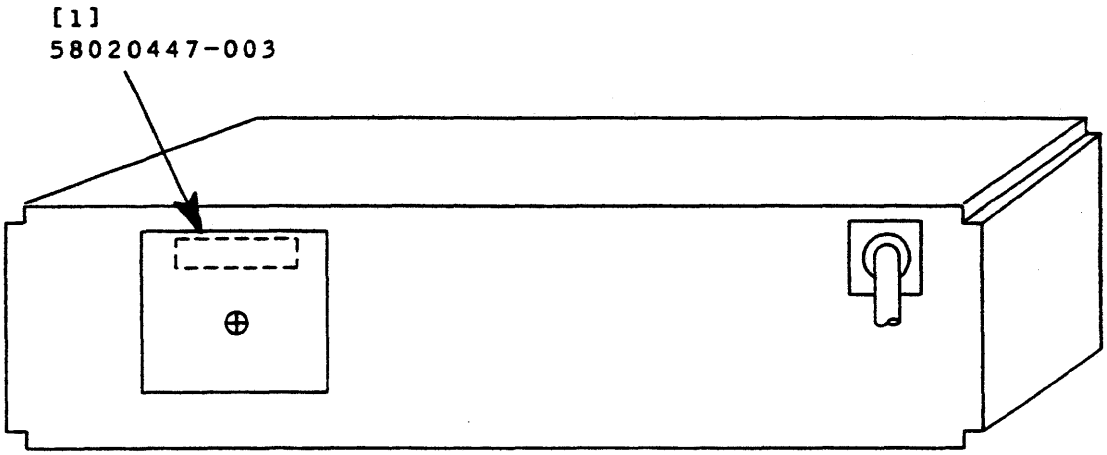

CAPACITOR MODULE (58052267-XXX)

FIGURE 2.24-1. FUSE REMOVAL/INSTALLATION (SHEET 6 OF 7)

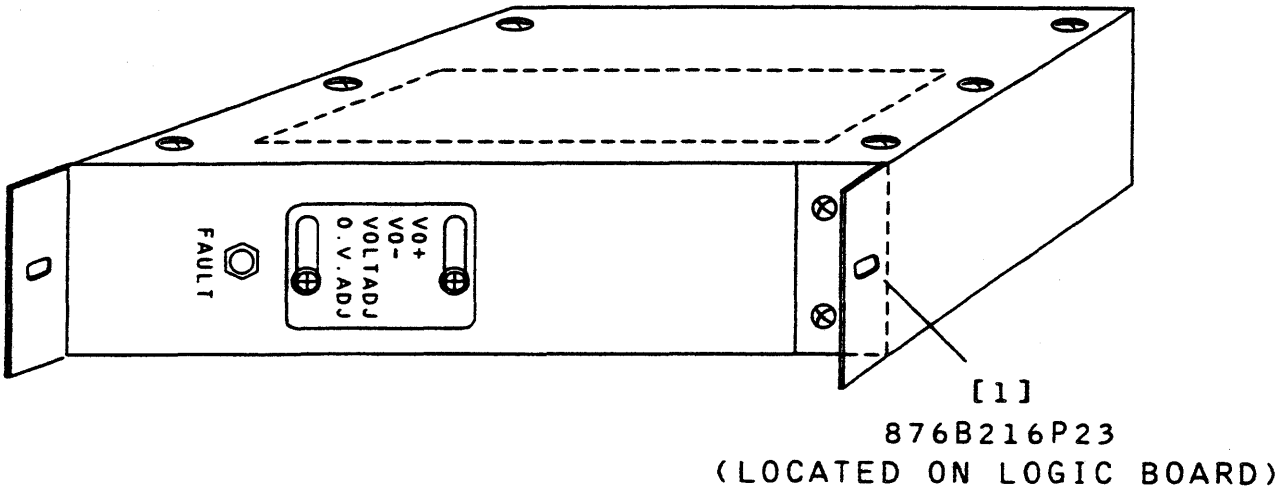

VOLTAGE REGULATOR (58047200-XXX)

FIGURE 2.24-1. FUSE REMOVAL/INSTALLATION (SHEET 7 OF 7)

REMOVAL STEPS:

NOTE: This procedure requires all resources affected by the module containing the defective fuse cartridge to be released or isolated from operating system prior to start of fuse replacement.

1. Isolate (release) affected resources from operating system (see Maintenance Procedure 4.1).

2. Using hex-head wrench, release cabinet's front/rear door latch mechanisms and open doors.

3. Remove cabinet logic power by pressing POWER OFF switch at faulty cabinet's Operator Control Panel.

4. Place Power Control Module's (VC1) Power Control REMOTE/LOCAL switch in LOCAL position.

5. Using fuse cartridge location diagram (Figure 2.25-1, Sheets 1 through 3) identify the fuse location.

Planar Reg. (Bus Enclosure)	Fuse 58020447-003	Sheet 1
Filter Module	Fuse 58020447-003	Sheet 2
Pwr Entry Modules	Fuse 877B293P19	Sheet 3
	Fuse 877B293P23	Sheet 3
Soft Start Module	Fuse 43B111736P7	Sheet 4
Pwr Regulator Module	Fuse 43B111736P9	Sheet 5
Capacitor Module	Fuse 43B111736P10	Sheet 6
Voltage Reg. Module	Fuse 876B216P23	Sheet 7

6. Gain access to fuse cartridge as required, i.e., use cross-tip screwdriver to remove compartment cover for bus enclosure /filter modules, and unscrew cartridge holder for Power Entry Module.

WARNING

BEFORE ATTEMPTING TO REMOVE PLANAR FUSES, VERIFY THE ABSENCE OF POWER USING A VOLTMETER OR PERSONAL INJURY MAY OCCUR.

7. Using fuse puller (ALL EXCEPT POWER ENTRY MODULES), remove defective fuse from fuse holder. Power Entry Modules have screw style holder caps.

8. Using multimeter, measure fuse resistance to determine if defective (open).

INSTALLATION STEPS:

1. Replace defective fuse with equivalent replacement.

2. Replace and secure compartment cover, fuse holder caps, etc.

3. Place Power Control Module's Power Control REMOTE/LOCAL switch in REMOTE position.

4. Restore cabinet logic power by pressing POWER ON switch at cabinet's Operator Control Panel.

5. Close and secure cabinet doors.

REPAIR VERIFICATION:

1. Ensure cabinet Operator Control Panel indications are within normal operating limits:

   o All fault indicators extinguished

   o AC and POWER ON indicators illuminated

2. Perform Maintenance Procedure 4.2 - Repair Verification (KWIK, NFTs, DPMs, etc.) to determine the acceptability of the repair action taken.

3. Assign resources back to operating system (see Maintenance Procedure 4.3).

4. Continue normal operation.

PROCEDURE 2.25

PURPOSE: This routine describes the removal and installation of Oscillator PWB Assembly

PART NUMBER: 43C219871G2
43C219871G7

REQUIRED TOOLS

Hex-head wrench (4mm)
Cross-tip screwdriver

REQUIRED TEST EQUIPMENT/MATERIALS

Maintenance Procedure 4.1 -	Isolating/Releasing System Resources
Maintenance Procedure 4.2 -	Repair Verification (KWIK, NFTs, DPMs, etc.)
Maintenance Procedure 4.3 -	Assigning System Resources

PRECAUTIONS: Strict compliance with all cautions and warnings is required to preclude injury and/or equipment damage.

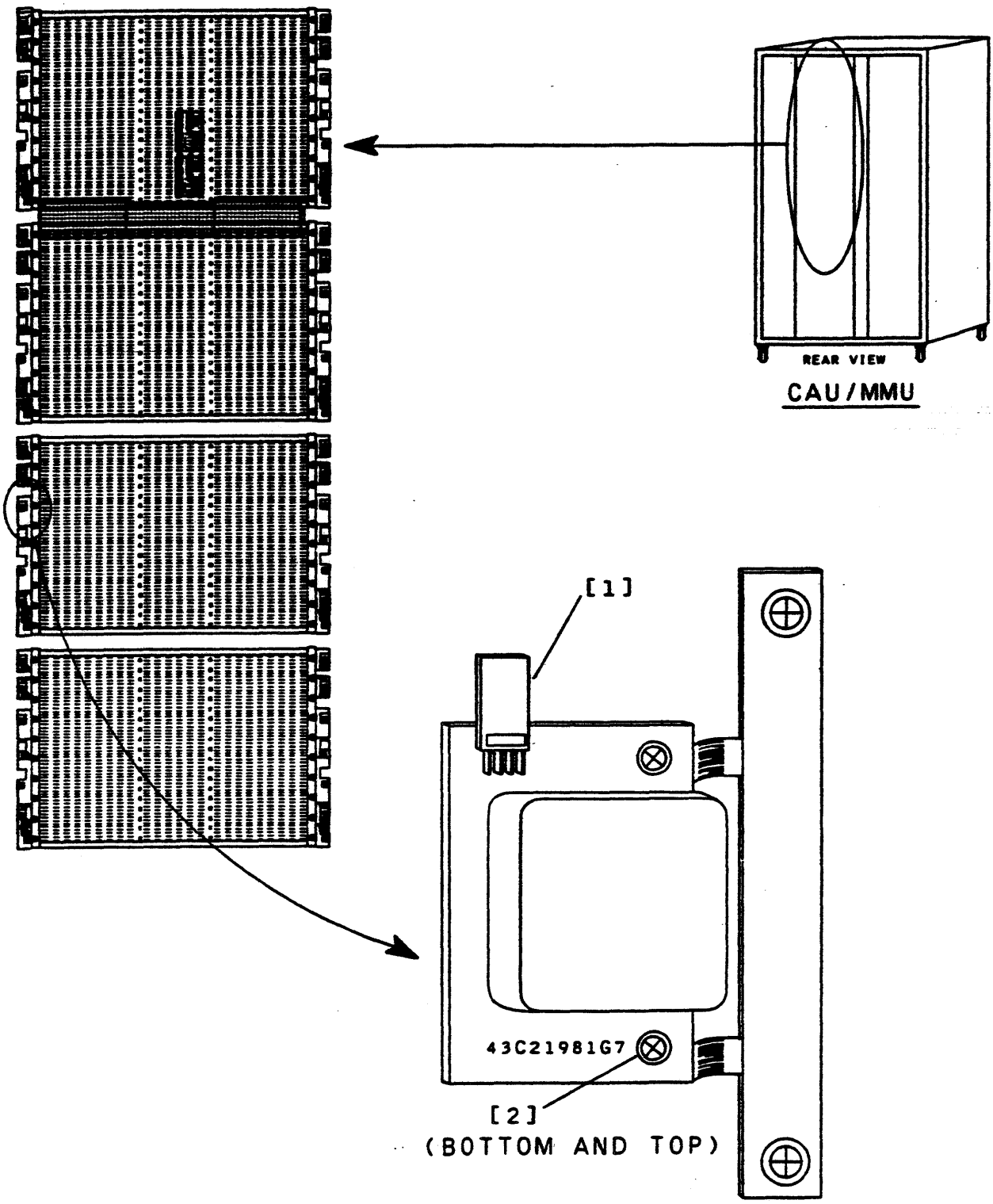

FIGURE 2.25-1. OSCILLATOR PWB ASSEMBLY REMOVAL/INSTALLATION

REMOVAL STEPS:

NOTE: This procedure requires all resources affected by faulty ORU be released or isolated from operating system prior to start of ORU repair.

1. Isolate (release) affected resources from operating system (see Maintenance Procedure 4.1).

2. Using hex-head wrench, release faulty cabinet's front and rear door latch mechanisms and open doors.

3. Remove cabinet logic power by pressing POWER OFF switch on faulty cabinet's Operator Control Panel.

4. Place Power Control Module's (VC1) Power Control REMOTE/LOCAL switch in LOCAL position.

5. Using hands, disconnect plug from faulty PWB assembly (Figure 2.25-1, [1]).

6. Using cross-tip screwdriver, remove faulty board from bracket assembly (Figure 2.25-1, [2]).

INSTALLATION STEPS:

1. Position and, using cross-tip screwdriver, secure replacement board to bracket assembly.

2. Reconnect connector to respective position.

3. Place Power Control Module's (VC1) Power Control REMOTE/LOCAL switch in REMOTE position.

4. Restore cabinet logic power by pressing POWER ON switch at cabinet's Operator Control Panel.

5. Close and secure cabinet doors.

REPAIR VERIFICATION:

1. Ensure cabinet's Operator Control Panel indications are within normal operating limits:

   o All fault indicators extinguished

   o AC and POWER ON indicators illuminated

2. Perform Maintenance Procedure 4.2 - Repair Verification (KWIK, NFTs, DPMs, etc.) to determine the acceptability of the repair action taken.
3. Assign resources back to operating system (see Maintenance Procedure 4.3).

4. Continue normal operation.

PROCEDURE 2.26

PURPOSE: This routine describes the removal and installation of Cabinet Air Filters

PART NUMBER: 58020278-xxx

REQUIRED TOOLS

Hex-head wrench (4mm)
Hex-head wrench

REQUIRED TEST EQUIPMENT/MATERIALS

None

PRECAUTIONS: Strict compliance with all cautions and warnings is required to preclude injury and/or equipment damage.

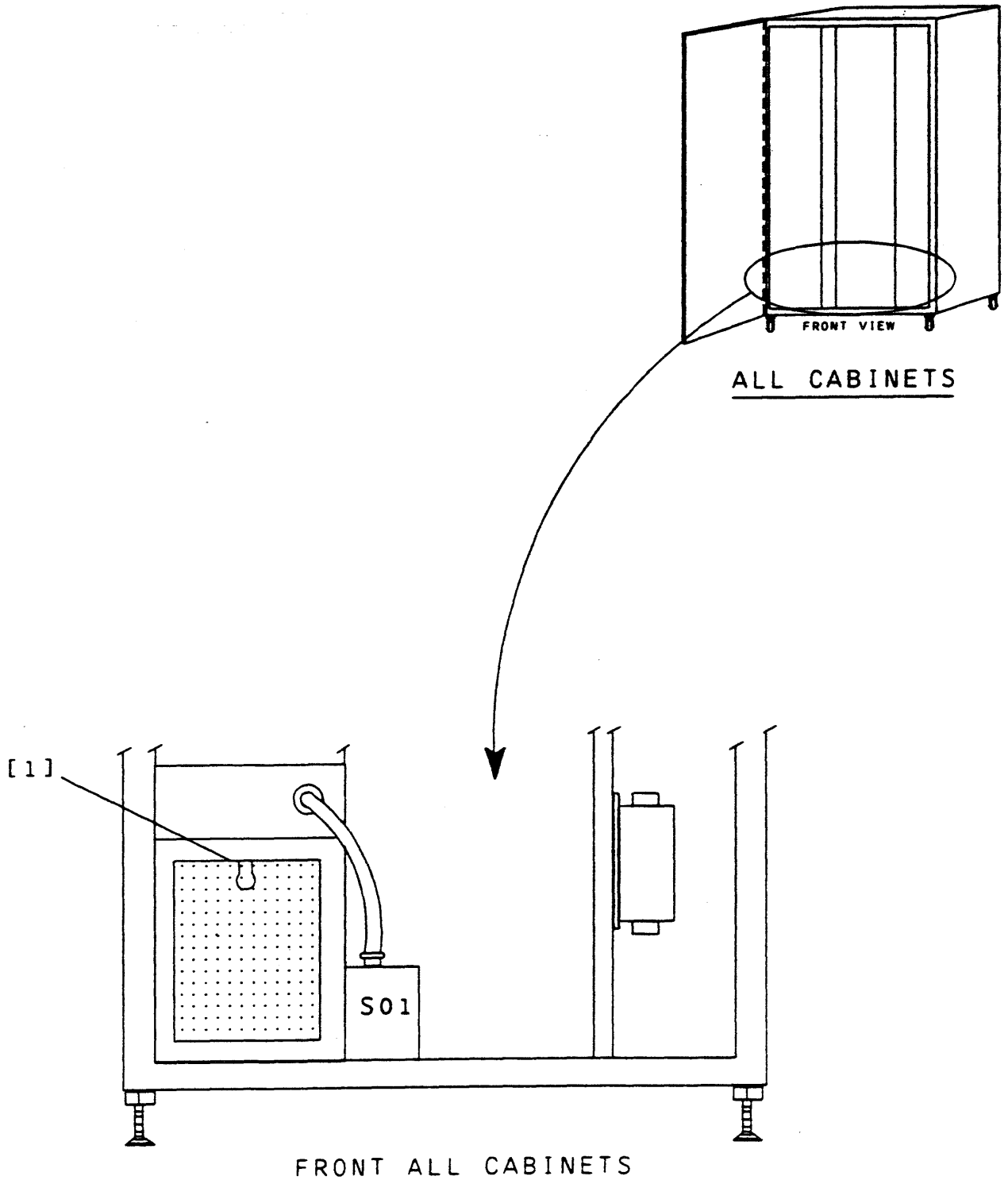

FIGURE 2.26-1. AIR FILTER ELEMENT REMOVAL/INSTALLATION

REMOVAL STEPS:

NOTE: This procedure requires all resources affected by faulty ORU be released or isolated from operating system prior to start of ORU repair.

1. Isolate (release) affected resources from operating system (see Maintenance Procedure 4.1).

2. Using hex-head wrench, release faulty cabinet's front and rear door latch mechanisms and open doors.

3. Remove cabinet logic power by pressing POWER OFF switch on faulty cabinet's Operator Control Panel.

4. Place Power Control Module's (VC1) Power Control REMOTE/LOCAL switch in LOCAL position.

5. Place the applicable BLOWER (FANS) circuit breaker on Power Entry Module to OFF.

6. Using air filter pull tabs, remove front and top filter elements from securing channels (Figure 2.26-1, [1]).

7. Repeat the filter removal operation for the cabinet rear filters.

CLEANING STEPS:

1. Filter cleaning procedures are to follow technique supplied with filter element, e.g. usually stamped on filter element frame.

2. Cleaned filter elements are to be air dried to reinstallation in equipment.

INSTALLATION STEPS:

CAUTION

WHEN INSTALLING FILTER ELEMENTS, ENSURE ARROW STAMPED ON FILTER ELEMENT FRAME IS IN DIRECTION OF AIR FLOW OR EQUIPMENT DAMAGE MAY RESULT.

1. Insert top filter element followed by the front element into it's respective securing channel.

2. Repeat installation operation for filters at rear of cabinet.

3. Place BLOWER (FANS) circuit breaker to ON.

4. Place Power Control Module's (VC1) Power Control REMOTE/LOCAL switch in REMOTE position.

5. Restore cabinet logic power by pressing POWER ON switch at cabinet's Operator Control Panel.

6. Close and secure cabinet doors.

REPAIR VERIFICATION:

1. Ensure cabinet's Operator Control Panel indications are within normal operating limits:

   o All fault indicators extinguished

   o AC and POWER ON indicators illuminated

2. Perform Maintenance Procedure 4.2 - Repair Verification (KWIK, NFTs, DPMs, etc.) to determine the acceptability of the repair action taken.

3. Assign resources back to operating system (see Maintenance Procedure 4.3).

4. Continue normal operation.

PROCEDURE 2.27

PURPOSE: This routine describes the removal and installation of Air Pressure Switch

Part Number: 58020158-001

REQUIRED TOOLS

Cross-tip screwdriver
Hex-head wrench (4mm)
Flat-tip screwdriver
Broad-nosed pliers

REQUIRED TEST EQUIPMENT/MATERIALS

Maintenance Procedure 4.1 - Releasing System Resources
Maintenance Procedure 4.3 - Assigning System Resources

PRECAUTIONS: Strict compliance with all cautions and warnings is required to preclude injury and/or equipment damage.

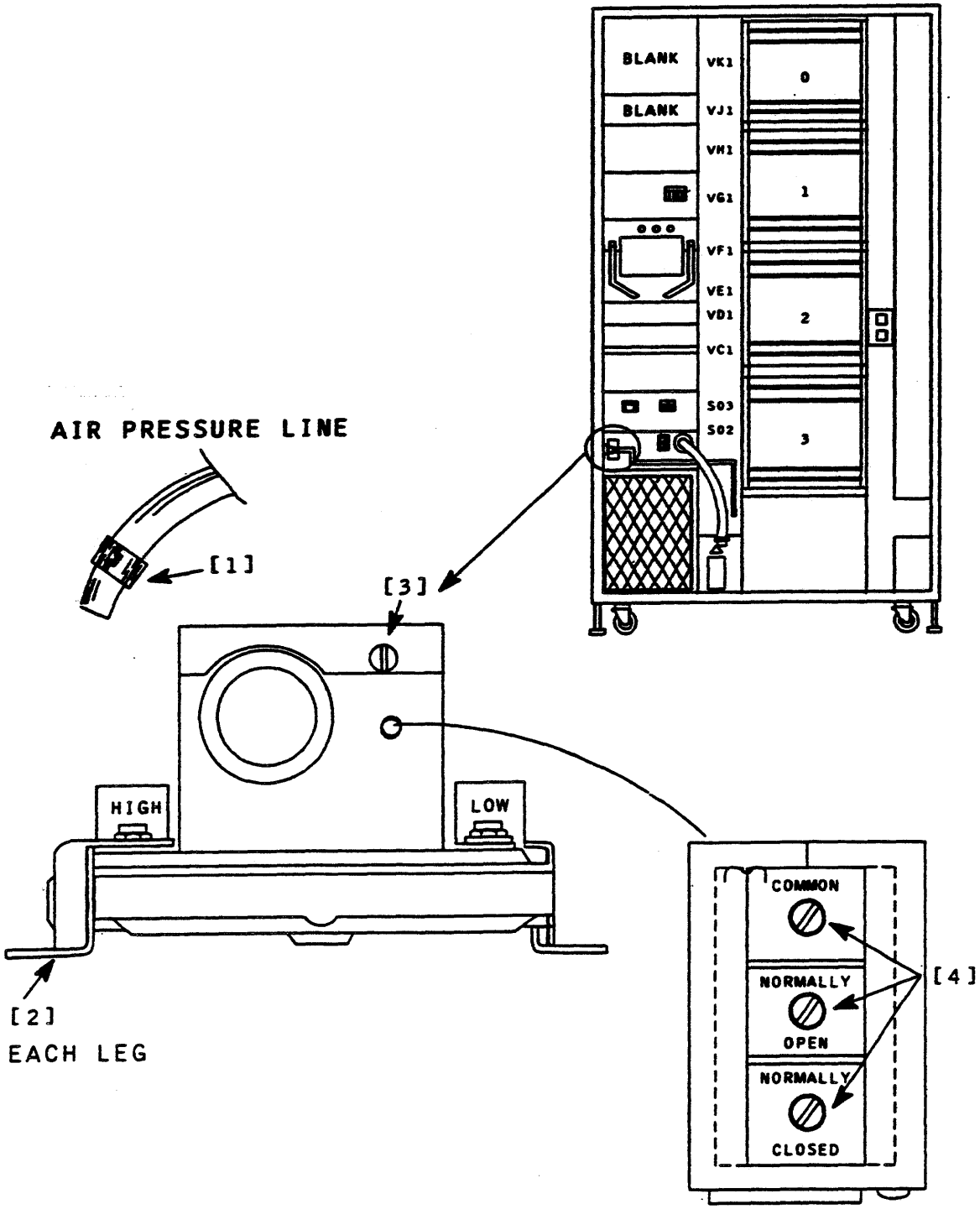

FIGURE 2.27-1. AIR PRESSURE SWITCH REMOVAL/INSTALLATION

REMOVAL STEPS:

NOTE: This procedure requires all resources affected by faulty ORU be released or isolated from operating system prior to start of ORU repair.

1. Isolate (release) affected resources from operating system (see Maintenance Procedure 4.1).

2. Using hex-head wrench, release faulty cabinet's front door latch mechanisms and open doors.

3. Remove cabinet logic power by pressing POWER OFF switch on faulty cabinet's Operator Control Panel.

4. Place Power Control Module's (VC1) Power Control REMOTE/LOCAL switch in LOCAL position.

5. Place the applicable BLOWER (FANS) circuit breaker on Power Entry Module to OFF.

6. Using broad-nosed pliers, compress air tube securing band and using twisting motion pull air tube from fitting (Figure 2.27-1, [1]).

7. Using cross-tip screwdriver, remove pressure switch retaining hardware (Figure 2.27-1, [2]).

8. Using flat-tip screwdriver, remove pressure switch cover and note position of snap-action switches (Figure 2.27-1, [3]).

9. Using flat-tip screwdriver, disconnect pressure switch electrical leads - remove faulty pressure switch from cabinet (Figure 2.27-1, [4]).

INSTALLATION STEPS:

1. Using flat-tip screwdriver, remove replacement switch cover.

2. Reconnect and, using flat-tip screwdriver,secure pressure switch electrical leads.

3. Verify snap-action switches are in identical position as in replaced unit.

4. Replace and, using flat-tip screwdriver, secure pressure switch cover.

5. Position and, using cross-tip screwdriver, secure replacement pressure switch with retaining hardware.

6. Using broad-nose pliers, compress air tube securing band and slide air tube over pressure switch fitting.

7. Place BLOWER (FANS) circuit breaker to ON.

8. Place Power Control Module's (VC1) Power Control REMOTE/LOCAL switch in REMOTE position.

9. Restore cabinet logic power by pressing POWER ON switch at cabinet's Operator Control Panel.

10. Close and secure cabinet doors.

REPAIR VERIFICATION:

1. Ensure cabinet's Operator Control Panel indications are within normal operating limits:

   o All fault indicators extinguished

   o AC and POWER ON indicators illuminated

2. Assign resources back to operating system (see Maintenance Procedure 4.3).

3. Continue normal operation.

PROCEDURE 2.28

PURPOSE: This routine describes the removal and installation of IOM Logic Boards

PART NUMBER:

58009320-xxx	58046630-xxx	58065230-xxx
58018520-xxx	58046650-xxx	58065430-xxx
58022210-xxx	58046660-xxx	58065440-xxx
58036120-xxx	58046720-xxx	58065450-xxx
58039780-xxx	58046740-xxx	58065900-xxx
58039880-xxx	58051320-xxx	58066280-xxx
58044050-xxx	58061330-xxx	58066290-xxx
58044940-xxx	58065100-xxx	58066310-xxx
58044950-xxx	58063120-xxx	58066919-xxx
58044980-xxx	58064780-xxx	58088820-xxx

REQUIRED TOOLS

Hex-head wrench (4mm)
Board extractor.

REQUIRED TEST EQUIPMENT/MATERIALS

Maintenance Procedure 4.1 - Isolating/Releasing System Resources
Maintenance Procedure 4.2 - Repair Verification (KWIK, NFTs, DPMs, etc.)
Maintenance Procedure 4.3 - Assigning System Resources

PRECAUTIONS: Strict compliance with all cautions and warnings is required to preclude injury and/or equipment damage.

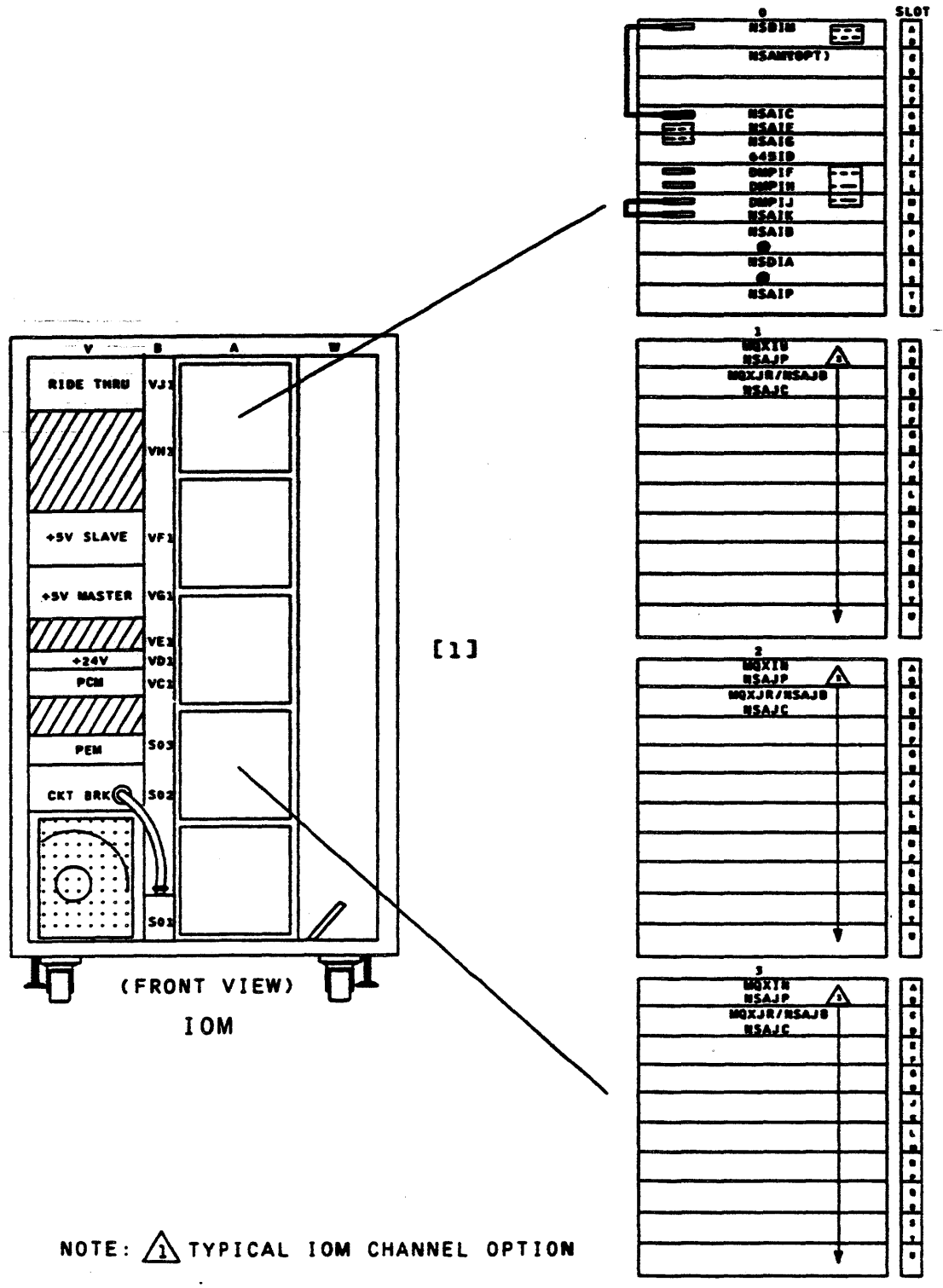

FIGURE 2.28-1. IOM LOGIC BOARD REMOVAL/INSTALLATION

REMOVAL STEPS:

NOTE: This procedure requires all resources affected by faulty ORU be released or isolated from operating system prior to start of ORU repair.

1. Isolate (release) affected resources from operating system (see Maintenance Procedure 4.1).

2. Using hex-head wrench, release IOM cabinet's front door latch mechanisms and open doors.

3. Remove cabinet logic power by pressing POWER OFF switch at faulty cabinet's Operator Control Panel.

4. Using logic board location diagram, identify position of faulty ORU (Figure 2.28-1, [1]).

5. Using board extractor, remove defective logic board.

   NOTE: When applicable, disconnect logic board edge connectors to allow removal of defective ORU.

INSTALLATION STEPS:

1. Slide replacement logic board into position via front of cabinet.

2. Using hands, carefully press logic board into fully installed position.

3. Reconnect logic board edge connectors to respective positions (as required).

4. Restore cabinet logic power by pressing POWER ON switch at cabinet's Operator Control Panel.

5. Close and secure cabinet doors.

REPAIR VERIFICATION:

1. Ensure cabinet's Operator Control Panel indications are within normal operating limits:

   o All fault indicators extinguished

   o AC and POWER ON indicators illuminated

2. Perform Maintenance Procedure 4.2 - Repair Verification (KWIK, NFTs, DPMs, etc.) to determine the acceptability of the repair action taken.

3. Assign resources back to operating system (see Maintenance Procedure 4.3).

4. Continue normal operation.

PROCEDURE 2.29

PURPOSE: This routine describes the removal and installation of MSP/MTP Logic Boards
Part Numbers:

58037400-xxx	58055600-xxx	58071760-xxx
58039720-xxx	58056411-xxx	58075890-xxx
58041810-xxx	58063070-xxx	58075900-xxx
58044154-xxx	58066390-xxx	58075910-xxx
58044900-xxx	58066690-xxx	58088870-xxx
58046760-xxx	58066960-xxx	58088880-xxx
58046800-xxx	58066970-xxx	58089270-xxx
58046810-xxx	58071460-xxx	58089530-xxx
58048920-xxx	58071470-xxx	58089540-xxx
58055410-xxx	58071480-xxx	

REQUIRED TOOLS

Hex-head wrench (4mm)
Board extractor.

REQUIRED TEST EQUIPMENT/MATERIALS

Maintenance Procedure 4.1 -	Isolating/Releasing System Resources
Maintenance Procedure 4.2 -	Repair Verification (KWIK, NFTs, DPMs, etc.)
Maintenance Procedure 4.3 -	Assigning System Resources

PRECAUTIONS: Strict compliance with all cautions and warnings is required to preclude injury and/or equipment damage.

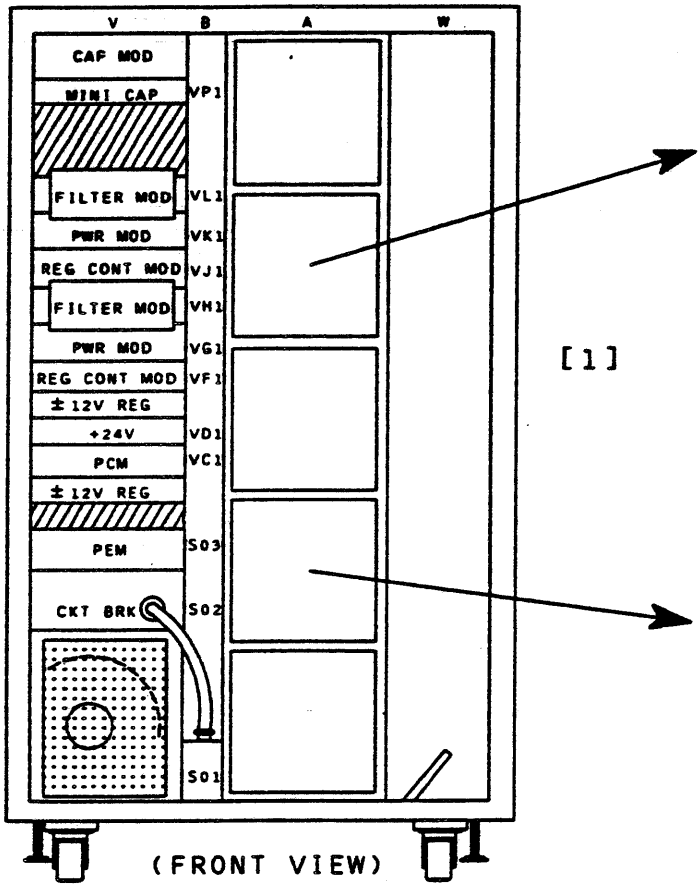

MSP/MTP (PPU)

[1]

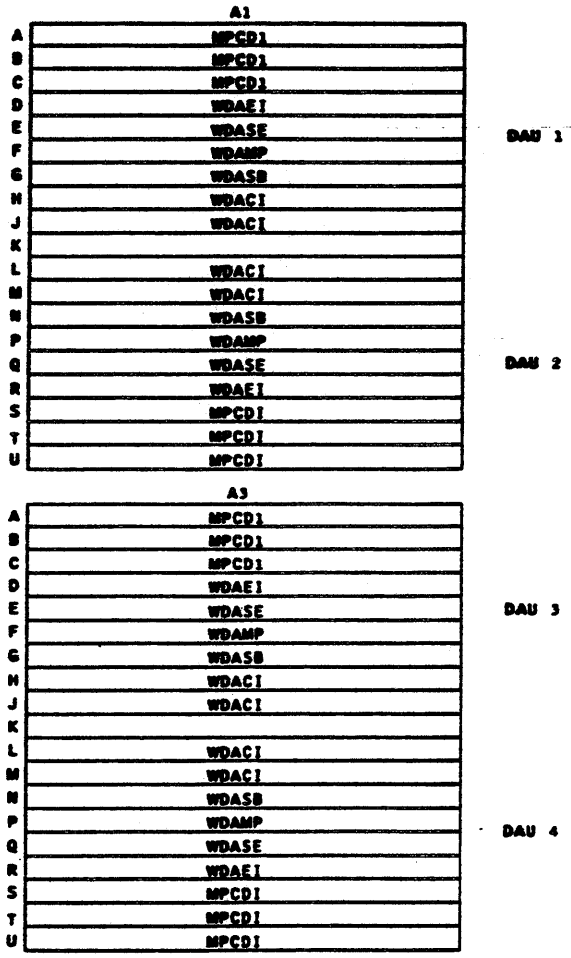

FIGURE 2.29-1. DAU LOGIC BOARD REMOVAL/INSTALLATION

WMTP66LA/LC OPTION

A	MT8CB	
B	MT8RC	
C	MT8BH	WGCR66LA OPTION
D	MT8ER	
E	MT8SB	
F	MT8AC	WTC166LB OPTION
G	MT8PB	
H	MT8FX	
J	MT8WD	
K	MT83A	
L	MT83A	
M	MT83A	
N	MPCNE	
P	DURIM	
Q	MPCFN	
R	MT8RA	
S	DURRO	WADE66LA OPTION
T	MT8MT	
U	MT8MT	

WMTP66LB/LD OPTION

A	MT8CB	
B	MT8RC	
C	MT8BH	
D	MT8ER	WGCR66LA OPTION
E	MT8SB	
F	MT8AC	
G	MT8PB	WTC166LB OPTION
H	MT8FX	
J	MT8WD	
K	MT83A	
L	MT83A	
M	MT83A	
N		
P		
Q		
R		
S		
T	MT8MT	WADE66LA OPTION
U	MT8MT	

FIGURE 2.29-2. MTP LOGIC BOARD REMOVAL/INSTALLATION

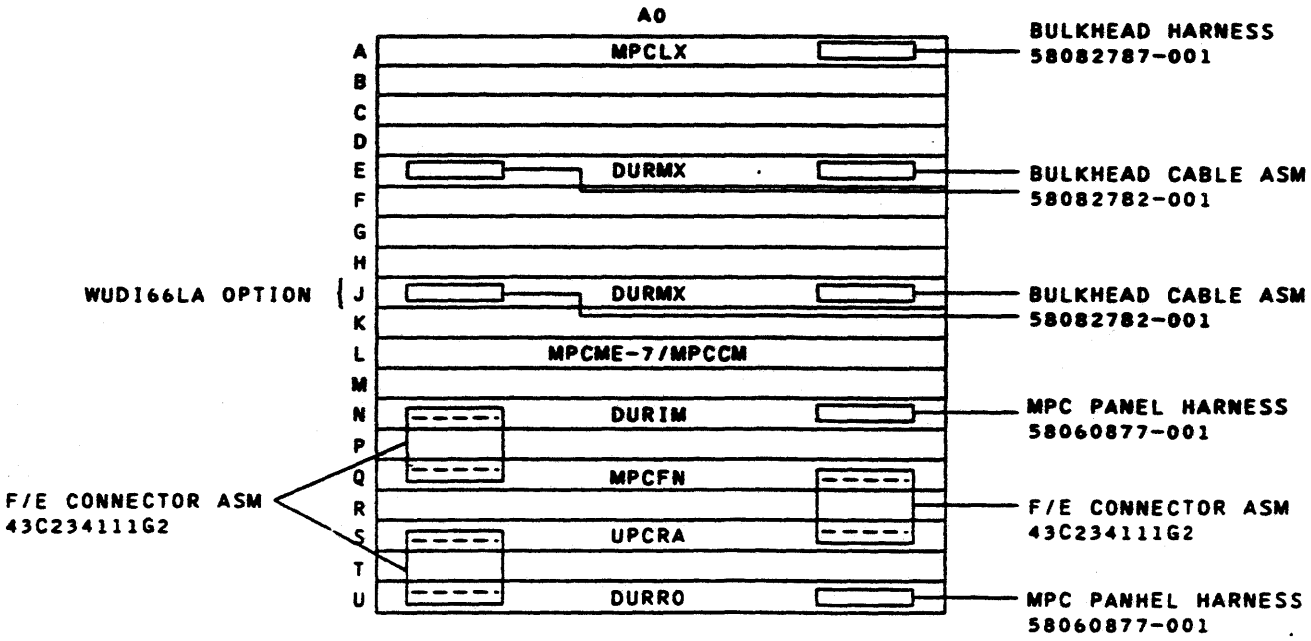

FIGURE 2.29-3. WURP66LA LOGIC BOARD REMOVAL/INSTALLATION

REMOVAL STEPS:

NOTE: This procedure requires all resources affected by faulty ORU be released or isolated from operating system prior to start of ORU repair.

1. Isolate (release) affected resources from operating system (see Maintenance Procedure 4.1).

2. Using hex-head wrench, release DAU cabinet's front door latch mechanisms and open doors.

3. Remove cabinet logic power by pressing POWER OFF switch at faulty cabinet's Operator Control Panel.

4. Using logic board location diagram, identify position of faulty ORU (Figure 2.29-1, [1]).

5. Using board extractor, remove defective logic board.

   NOTE: When applicable, disconnect logic board edge connectors to allow removal of defective ORU.

INSTALLATION STEPS:

1. Slide replacement logic board into position via front of cabinet.

2. Using hands, carefully press logic board into fully installed position.

3. Reconnect logic board edge connectors to respective positions (as required).

4. Restore cabinet logic power by pressing POWER ON switch at cabinet's Operator Control Panel.

5. Close and secure cabinet doors.

REPAIR VERIFICATION:

1. Ensure cabinet's Operator Control Panel indications are within normal operating limits:

   o All fault indicators extinguished

   o AC and POWER ON indicators illuminated

2. Perform Maintenance Procedure 4.2 - Repair Verification (KWIK, NFTs, DPMs, etc.) to determine the acceptability of the repair action taken.

3. Assign resources back to operating system (see Maintenance Procedure 4.3).

4. Continue normal operation.

PROCEDURE 2.30

PURPOSE: This routine describes the removal and installation of Configuration Panels

PART NUMBER: 58059029-xxx
58059633-xxx
58059634-xxx

REQUIRED TOOLS

Hex-head wrench (4mm)
Screwdriver

REQUIRED TEST EQUIPMENT/MATERIALS

Maintenance Procedure 4.1 - Isolating/Releasing System Resources (AS REQUIRED)
Maintenance Procedure 4.3 - Assigning System Resources

PRECAUTIONS: Strict compliance with all cautions and warnings is required to preclude injury and/or equipment damage.

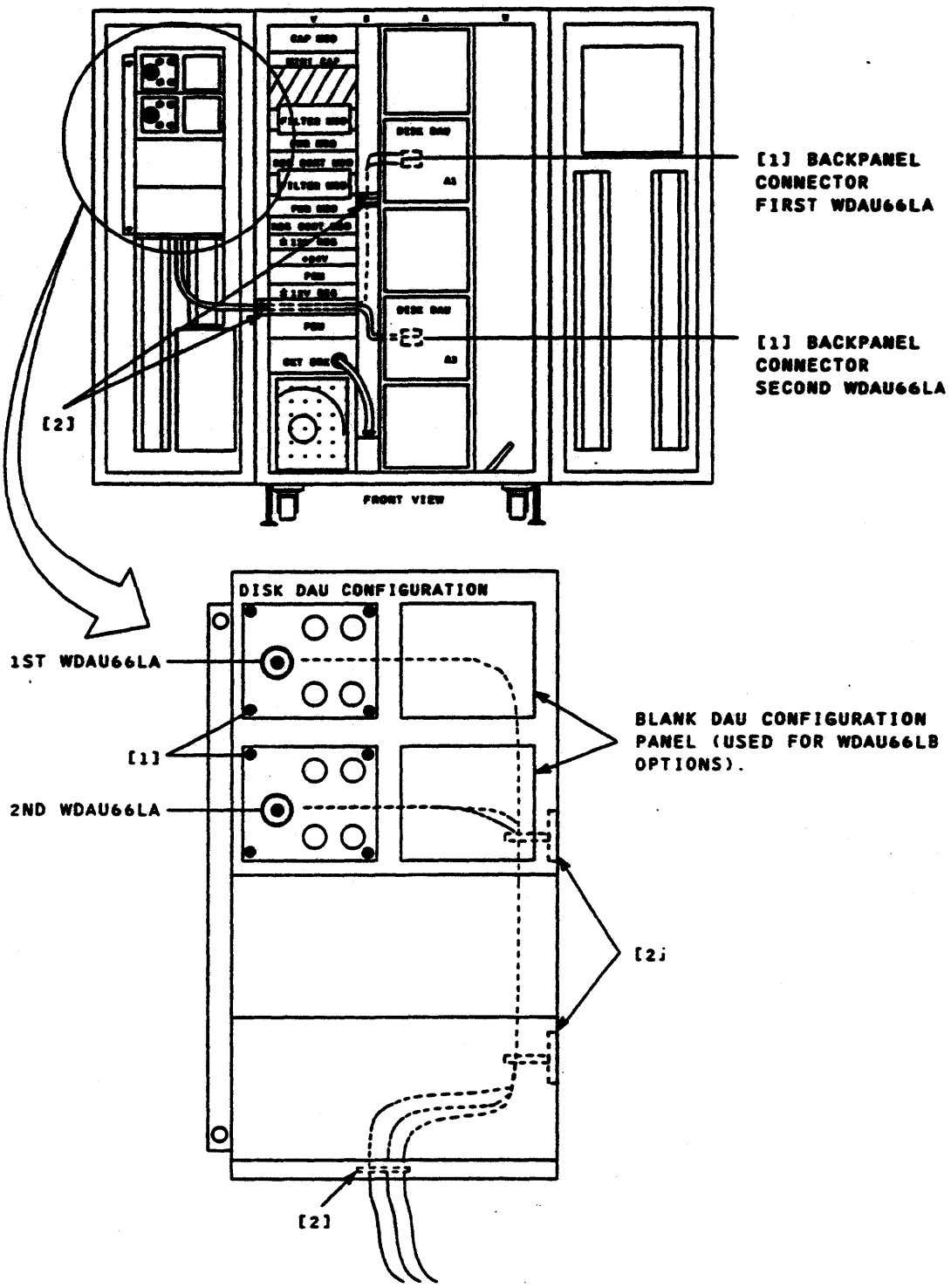

FIGURE 2.30-1. CONFIGURATION PANELS REMOVAL/INSTALLATION

REMOVAL STEPS:

NOTE: This procedure may require resources affected by faulty ORU be released or isolated from operating system prior to start of ORU repair.

1. Isolate (release) affected resources from operating system as required (see Maintenance Procedure 4.1).

2. Using hex-head wrench, release cabinet's front door latch mechanisms and open doors.

3. Ensure that cabinet operation is not in the panel mode.

4. Remove cabinet logic power by pressing POWER OFF switch at faulty cabinet's Operator Control Panel. [AS REQUIRED]

5. Disconnect panel's wire harness connector plugs (Figure 2.30-1, [1])..

6. Remove cable ties which secure the configuration panel harness (Figure 2.30-1 [2]).

7. Extract the cables from the power and logic bays.

8. Using a screwdriver, remove all panel securing hardware and remove panel from cabinet.

INSTALLATION STEPS:

1. Position replacement panel in cabinet and secure using screwdriver and hardware previously removed.

2. Route the cable down through the opening between the regulators and over to the DAU backpanel.

3. Secure the cable at locations indicated using cable ties and anchors.

4. Carefully position and secure wire harness connectors.

5. Position all configuration switches in the required site configuration pattern.

6. Restore cabinet logic power by pressing POWER ON switch at cabinet Operator Control Panel. [AS REQUIRED]

7. Close and secure cabinet doors.

REPAIR VERIFICATION:

1. Ensure cabinet's Operator Control Panel indications are within normal operating limits:

   o All fault indicators extinguished

   o AC and POWER ON indicators illuminated

2. Assign resources back to operating system as required (see Maintenance Procedure 4.3).

3. Continue normal operation.

PROCEDURE 2.31

PURPOSE: This routine describes the removal and installation of Use/Run Time Meters

PART NUMBER: 58059171-001 58059172-001
58059171-002 58059172-002

REQUIRED TOOLS

Hex-head wrench (4mm)
Screwdriver

REQUIRED TEST EQUIPMENT/MATERIALS

Maintenance Procedure 4.1 - Isolating/Releasing System Resources (AS REQUIRED)
Maintenance Procedure 4.3 - Assigning System Resources

PRECAUTIONS: Strict compliance with all cautions and warnings is required to preclude injury and/or equipment damage.

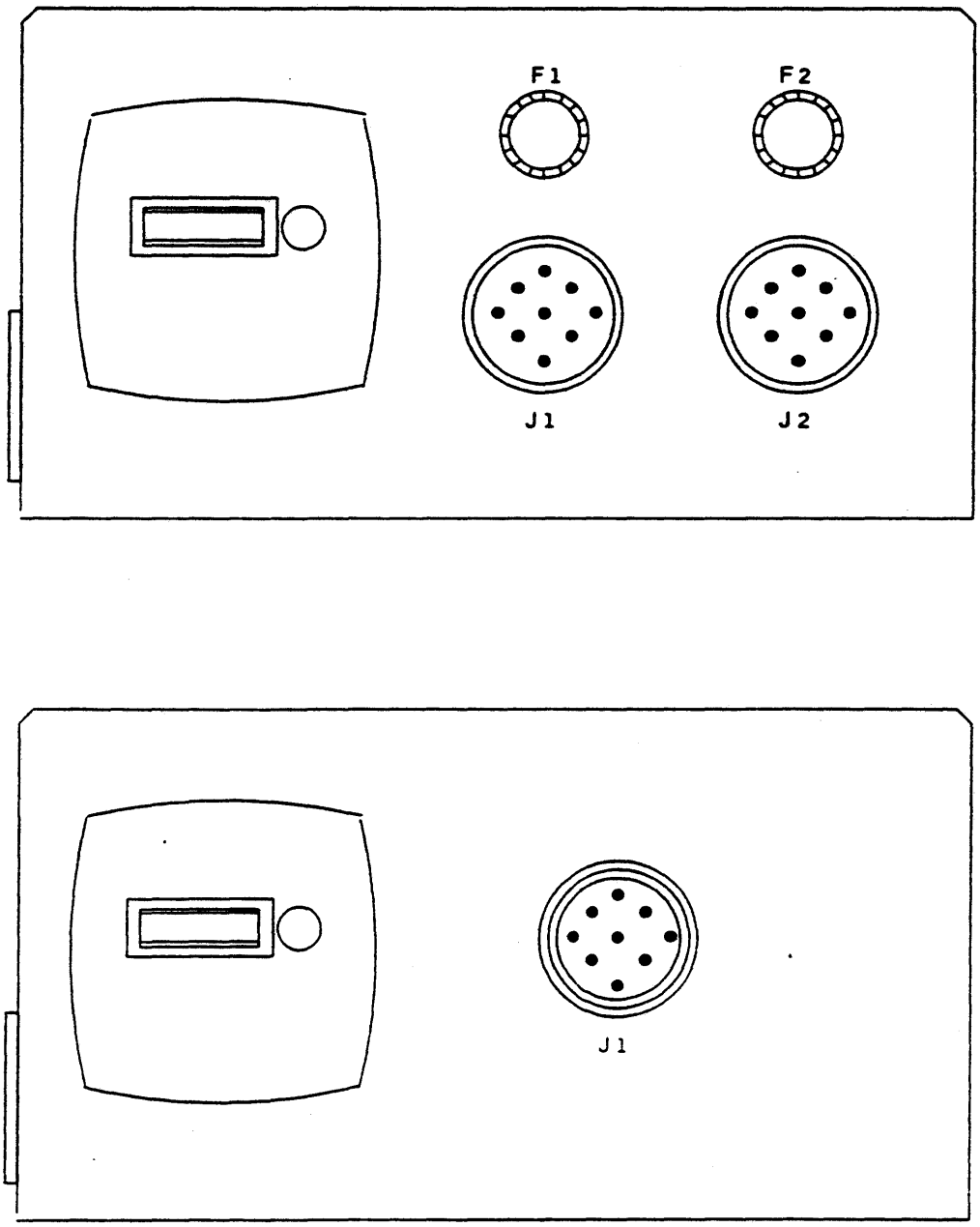

FIGURE 2.31-1. USE/RUN TIME METER REMOVAL/INSTALLATION

REMOVAL STEPS:

NOTE: This procedure may require resources affected by faulty ORU be released or isolated from operating system prior to start of ORU repair.

1. Isolate (release) affected resources from operating system as required (see Maintenance Procedure 4.1).

2. Using hex-head wrench, release cabinet's front door latch mechanisms and open doors.

3. Remove cabinet logic power by pressing POWER OFF switch at faulty cabinet's Operator Control Panel. [AS REQUIRED]

4. Disconnect meter's wire connections (Figure 2.31-1, [1]).

5. Using a screwdriver, remove all meter securing hardware and remove meter from cabinet.

INSTALLATION STEPS:

1. Position replacement meter in cabinet and secure using screwdriver and hardware previously removed.

2. Carefully position and secure wire connections.

3. Restore cabinet logic power by pressing POWER ON switch at cabinet's Operator Control Panel. [AS REQUIRED]

4. Close and secure cabinet doors.

REPAIR VERIFICATION:

1. Ensure cabinet's Operator Control Panel indications are within normal operating limits:

   o All fault indicators extinguished

   o AC and POWER ON indicators illuminated

2. Assign resources back to operating system as required (see Maintenance Procedure 4.3).

3. Continue normal operation.

PROCEDURE 2.32

PURPOSE: This routine describes the removal and installation of Converter Regulator

PART NUMBER: 58036080-xxx

REQUIRED TOOLS

Hex-head wrench (4mm)
Cross-tip screwdriver

REQUIRED TEST EQUIPMENT/MATERIALS

Maintenance Procedure 4.1 -	Isolating/Releasing System Resources
Maintenance Procedure 4.2 -	Repair Verification (KWIK, NFTs, DPMs, etc.)
Maintenance Procedure 4.3 -	Assigning System Resources

PRECAUTIONS: Strict compliance with all cautions and warnings is required to preclude injury and/or equipment damage.

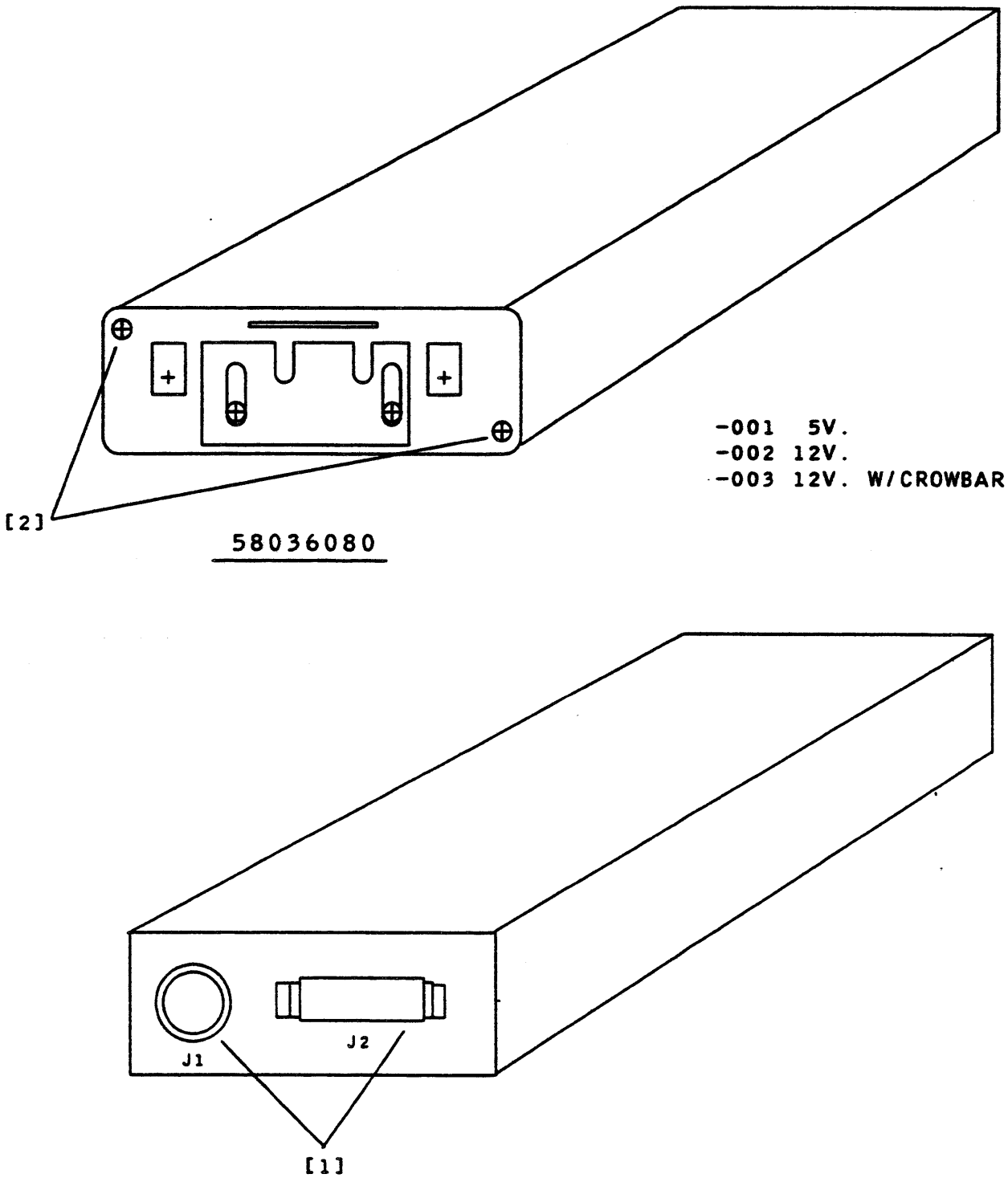

FIGURE 2.32-1. CONVERTER REGULATOR REMOVAL/INSTALLATION

REMOVAL STEPS:

NOTE: This procedure may require resources affected by faulty ORU be released or isolated from operating system prior to start of ORU repair.

1. Isolate (release) affected resources from operating system as required (see Maintenance Procedure 4.1).

2. Using hex-head wrench, release cabinet's front and rear door latch mechanisms and open doors.

3. Remove regulator's output power by pressing POWER OFF switch at faulty cabinet's Operator Control Panel.

4. Place Power Control Module's (VC1) Power Control REMOTE/LOCAL switch in LOCAL position.

5. Disconnect regulator's rear connector plugs (Figure 2.32-1, [1].

6. Using a cross-tip screwdriver, remove regulator's front securing hardware and remove regulator from cabinet (Figure 2.32-1, [2].

INSTALLATION STEPS:

1. Position replacement regulator in cabinet and secure using screwdriver and hardware previously removed.

2. Position and secure rear connector plugs.

3. Place Power Control Module's (VC1) Power Control REMOTE/LOCAL switch in REMOTE position.

4. Restore cabinet logic power by pressing POWER ON switch on Operator Control Panel.

5. Close and secure cabinet doors.

REPAIR VERIFICATION:

1. Ensure cabinet's Operator Control Panel indications are within normal operating limits:

   o All fault indicators extinguished

   o AC and POWER ON indicators illuminated

2. Perform Maintenance Procedure 4.2 - Repair Verification (KWIK, NFTs, DPMs, etc.) to determine the acceptability of the repair action taken.

3. Assign resources back to operating system as required (see Maintenance Procedure 4.3).

4. Continue normal operation.

PROCEDURE 2.33

PURPOSE: This routine describes the removal and installation of DC/DC Converter

PART NUMBER: 58047167-xxx

REQUIRED TOOLS

Hex-head wrench (4mm)
Cross-tip screwdriver

REQUIRED TEST EQUIPMENT/MATERIALS

Maintenance Procedure 4.1 -	Isolating/Releasing System Resources
Maintenance Procedure 4.2 -	Repair Verification (KWIK, NFTs, DPMs, etc.)
Maintenance Procedure 4.3 -	Assigning System Resources

PRECAUTIONS: Strict compliance with all cautions and warnings is required to preclude injury and/or equipment damage.

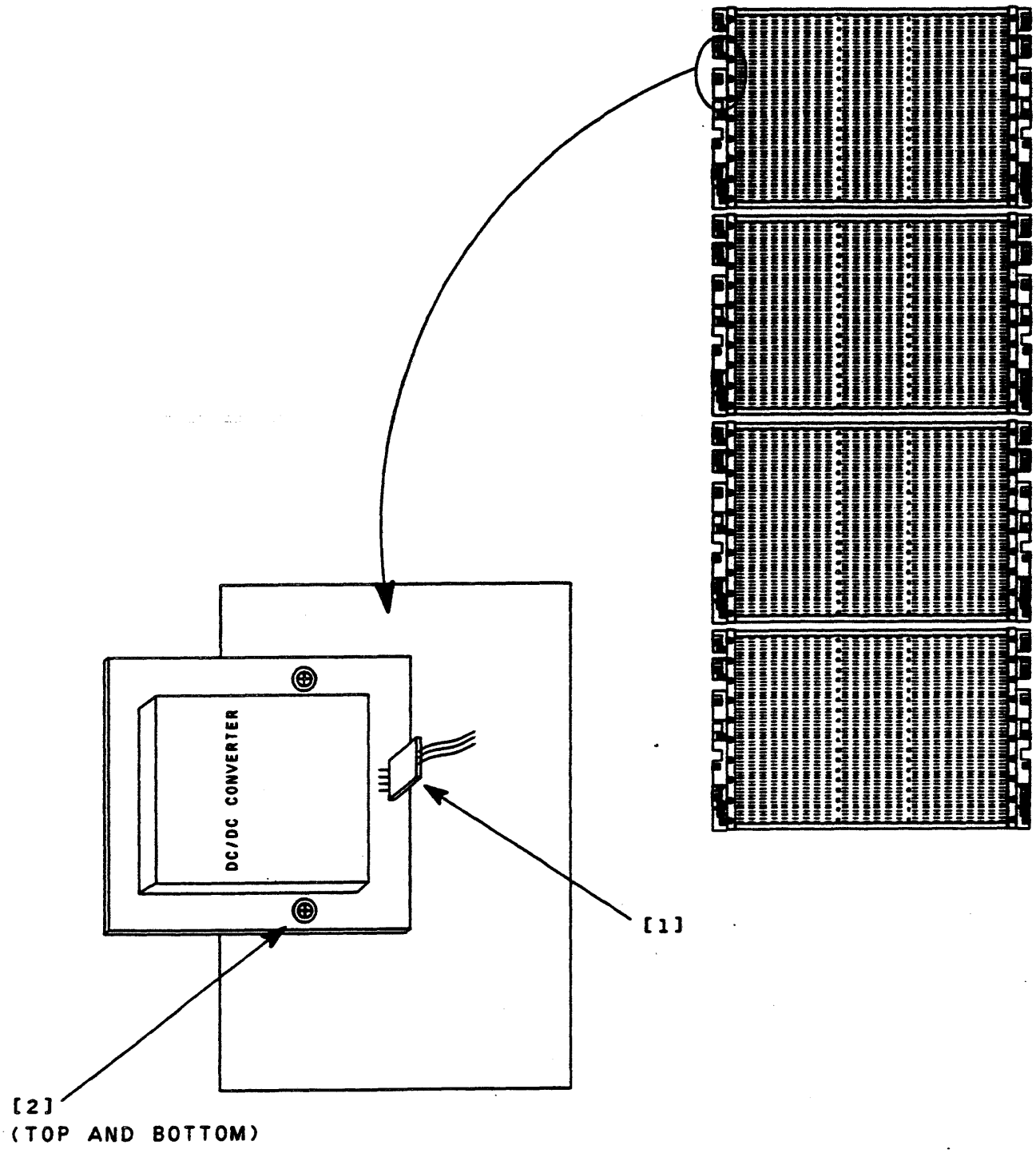

FIGURE 2.33-1. DC/DC CONVERTER REMOVAL/INSTALLATION

REMOVAL STEPS:

NOTE: This procedure may require resources affected by faulty ORU be released or isolated from operating system prior to start of ORU repair.

1. Isolate (release) affected resources from operating system as required (see Maintenance Procedure 4.1).

2. Using hex-head wrench, release cabinet's front and rear door latch mechanisms and open doors.

3. Remove regulator's output power by pressing POWER OFF switch at faulty cabinet's Operator Control Panel.

4. Disconnect converter's connector plug (Figure 2.33-1, [1].

5. Using a cross-tip screwdriver, remove converter securing hardware and remove converter from backpanel (Figure 2.33-1, [2].

INSTALLATION STEPS:

1. Position replacement converter in cabinet and secure using screwdriver and hardware previously removed.

2. Position and secure connector plug.

3. Restore cabinet logic power by pressing POWER ON switch on Operator Control Panel.

4. Close and secure cabinet doors.

REPAIR VERIFICATION:

1. Ensure cabinet's Operator Control Panel indications are within normal operating limits:

   o All fault indicators extinguished

   o AC and POWER ON indicators illuminated

2. Perform Maintenance Procedure 4.2 - Repair Verification (KWIK, NFTs, DPMs, etc.) to determine the acceptability of the repair action taken.

3. Assign resources back to operating system as required (see Maintenance Procedure 4.3).

4. Continue normal operation.

PROCEDURE 2.34

PURPOSE: This routine describes the removal and installation of Power Regulator

PART NUMBER: 58048580-xxx

REQUIRED TOOLS

Hex-head wrench (4mm)
Cross-tip screwdriver

REQUIRED TEST EQUIPMENT/MATERIALS

Maintenance Procedure 4.1 -	Isolating/Releasing System Resources
Maintenance Procedure 3.7 -	Voltage Regulator 100W Adjustment (58048580-xxx)
Maintenance Procedure 4.2 -	Repair Verification (KWIK, NFTs, DPMs, etc.)
Maintenance Procedure 4.3 -	Assigning System Resources

PRECAUTIONS: Strict compliance with all cautions and warnings is required to preclude injury and/or equipment damage.

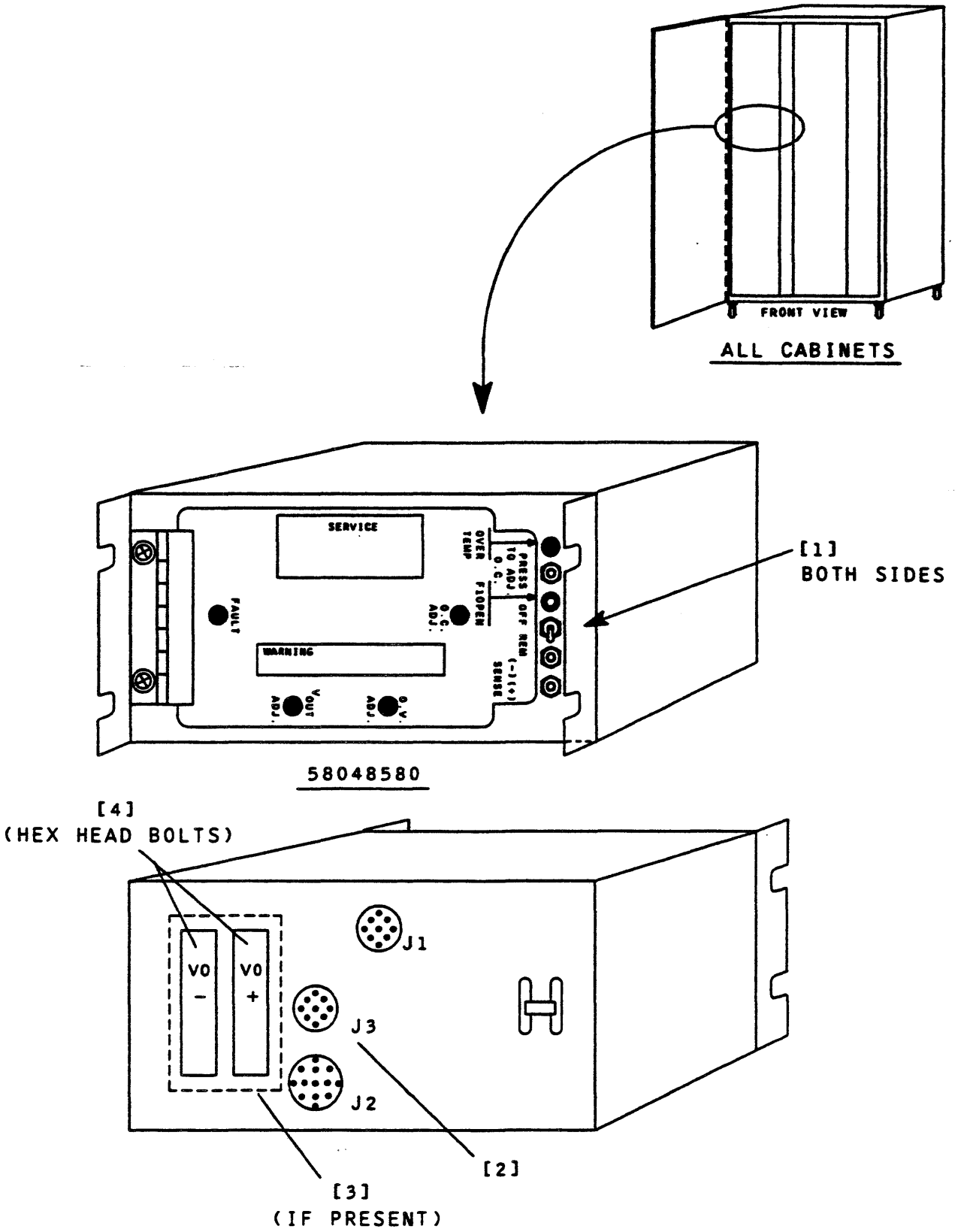

FIGURE 2.34-1. POWER REGULATOR REMOVAL/INSTALLATION

REMOVAL STEPS:

NOTE: This procedure may require resources affected by faulty ORU be released or isolated from operating system prior to start of ORU repair.

1. Isolate (release) affected resources from operating system as required (see Maintenance Procedure 4.1).

2. Using hex-head wrench, release cabinet's front and rear door latch mechanisms and open doors.

3. Remove regulator's output power by pressing POWER OFF switch at faulty cabinet's Operator Control Panel.

4. Place cabinet input power circuit breaker in the OFF position.

5. Using a cross-tip screwdriver, remove faulty regulator's front retaining hardware (Figure 2.34-1, [1]).

6. Disconnect regulator's rear connector plugs (Figure 2.34-1, [2]).

7. Loosen captive screws on electrical bus protective shield and remove shield (Figure 2.34-1, [3]).

8. Using a cross-tip screwdriver, remove electrical bus retaining hardware (Figure 2.34-1, [4]).

9. Carefully slide faulty module forward approximately 2 inches by pushing module via rear of cabinet.

10. Remove and place aside faulty regulator module via front of cabinet.

INSTALLATION STEPS:

1. Slide replacement regulator module into position via front of cabinet.

2. Install and, using a cross-tip screwdriver, secure front retaining hardware.

3. Install and, using a cross-tip screwdriver, secure electrical bus connections using hardware previously removed.

4. Position and secure the electrical bus protective shield using captive screws.

5. Reconnect rear connectors to corresponding numbered jacks.

6. Place cabinet input power circuit breaker in the ON position.

7. Restore cabinet logic power by pressing POWER ON switch on Operator Control Panel.

8. Perform Maintenance Procedure 3.7 - Power Regulator Module (58048580-xxx) Adjustment.

9. Close and secure cabinet doors.

REPAIR VERIFICATION:

1. Ensure cabinet's Operator Control Panel indications are within normal operating limits:

   o All fault indicators extinguished

   o AC and POWER ON indicators illuminated

2. Perform Maintenance Procedure 4.2 - Repair Verification (KWIK, NFTs, DPMs, etc.) to determine the acceptability of the repair action taken.

3. Assign resources back to operating system as required (see Maintenance Procedure 4.3).

4. Continue normal operation.

PROCEDURE 2.35

PURPOSE: This routine describes the removal and installation of Soft Start Module

PART NUMBER: 58052618-xxx

REQUIRED TOOLS

Hex-head wrench (4mm)
Cross-tip screwdriver

REQUIRED TEST EQUIPMENT/MATERIALS

Maintenance Procedure 4.1 -	Isolating/Releasing System Resources
Maintenance Procedure 4.2 -	Repair Verification (KWIK, NFTs, DPMs, etc.)
Maintenance Procedure 4.3 -	Assigning System Resources

PRECAUTIONS: Strict compliance with all cautions and warnings is required to preclude injury and/or equipment damage.

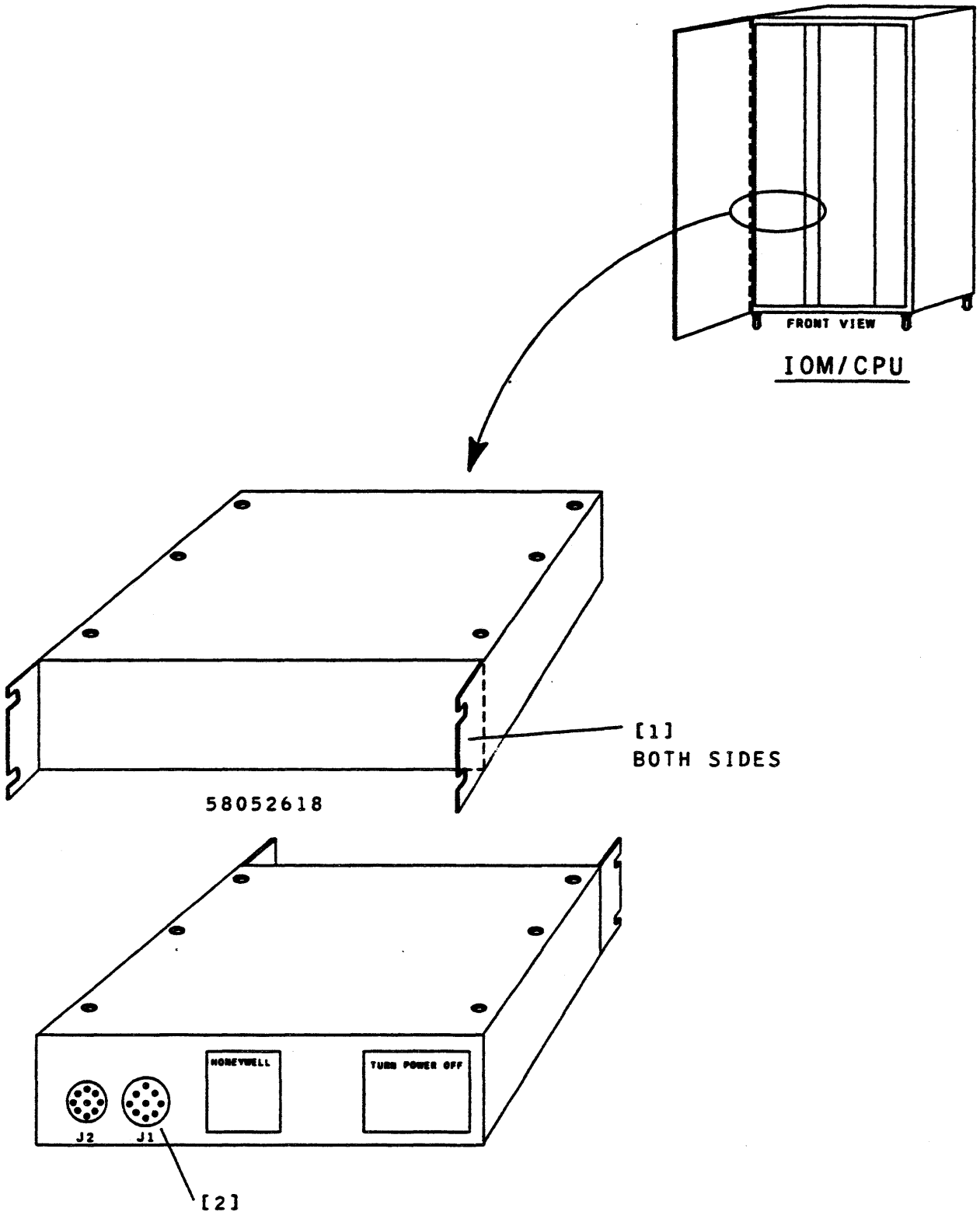

FIGURE 2.35-1. SOFT START MODULE REMOVAL/INSTALLATION

REMOVAL STEPS:

NOTE: This procedure may require resources affected by faulty ORU be released or isolated from operating system prior to start of ORU repair.

1. Isolate (release) affected resources from operating system as required (see Maintenance Procedure 4.1).

2. Using hex-head wrench, release cabinet's front and rear door latch mechanisms and open doors.

3. Remove module's output power by pressing POWER OFF switch at faulty cabinet's Operator Control Panel.

4. Place cabinet input power circuit breaker in the OFF position.

5. Using a cross-tip screwdriver, remove faulty regulator's front retaining hardware (Figure 2.35-1, [1]).

WARNING

HAZARDOUS VOLTAGES ARE PRESENT WITHIN SOFT START MODULE. ALLOW A MINIMUM OF 5 MINUTES TO ELAPSE BEFORE ATTEMPTING MODULE MAINTENANCE OR PERSONAL INJURY MAY OCCUR.

6. Disconnect modules rear connector plugs (Figure 2.35-1, [2]).

7. Carefully slide faulty module forward approximately 2 inches by pushing module via rear of cabinet.

8. Remove and place aside faulty regulator module via front of cabinet.

INSTALLATION STEPS:

1. Position replacement module in cabinet and secure using cross-tip screwdriver and hardware previously removed.

2. Reconnect rear connectors to corresponding numbered jacks.

3. Place cabinet input power circuit breaker in the ON position.

4. Restore cabinet logic power by pressing POWER ON switch on Operator Control Panel.

5. Close and secure cabinet doors.

REPAIR VERIFICATION:

1. Ensure cabinet's Operator Control Panel indications are within normal operating limits:

   o All fault indicators extinguished

   o AC and POWER ON indicators illuminated

2. Perform Maintenance Procedure 4.2 - Repair Verification (KWIK, NFTs, DPMs, etc.) to determine the acceptability of the repair action taken.

3. Assign resources back to operating system as required (see Maintenance Procedure 4.3).

4. Continue normal operation.

PROCEDURE 2.36

PURPOSE: This routine describes the removal and installation of PWA LP-DR

PART NUMBER: 58059501-xxx

REQUIRED TOOLS

Hex-head wrench (4mm)
Cross-tip screwdriver

REQUIRED TEST EQUIPMENT/MATERIALS

Maintenance Procedure 4.1 -	Isolating/Releasing System Resources
Maintenance Procedure 4.2 -	Repair Verification (KWIK, NFTs, DPMs, etc.)
Maintenance Procedure 4.3 -	Assigning System Resources

PRECAUTIONS: Strict compliance with all cautions and warnings is required to preclude injury and/or equipment damage.

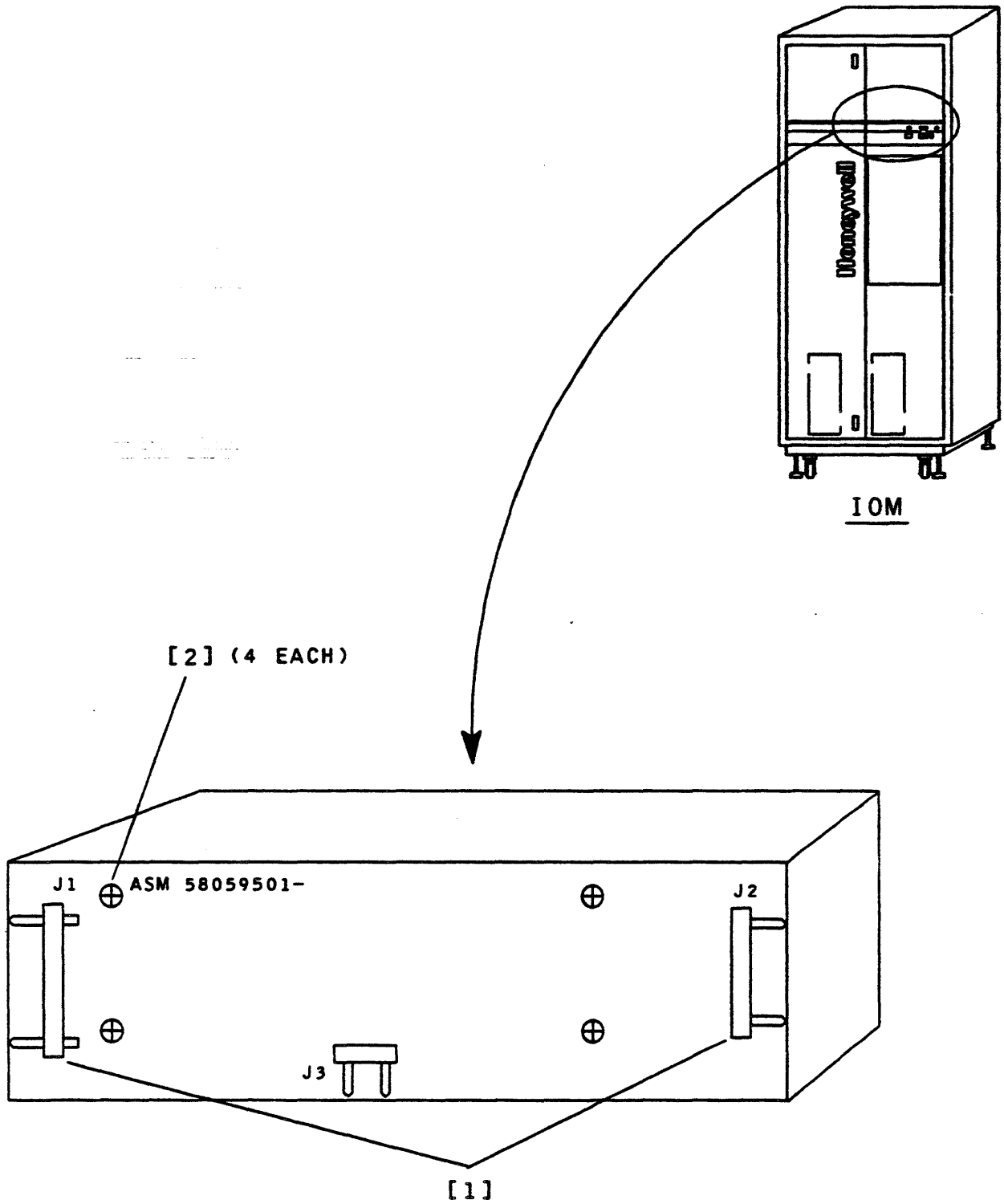

FIGURE 2.36-1. PWA LP-DR REMOVAL/INSTALLATION

REMOVAL STEPS:

NOTE: This procedure may require resources affected by faulty ORU be released or isolated from operating system prior to start of ORU repair.

1. Isolate (release) affected resources from operating system as required (see Maintenance Procedure 4.1).

2. Using hex-head wrench, release cabinet's front door latch mechanisms and open doors.

3. Remove cabinet power by pressing POWER OFF switch at faulty cabinet's Operator Control Panel.

4. Place cabinet input power circuit breaker in the OFF position.

5. Disconnect wire harness connector plugs from faulty PWA (Figure 2.36, [1]).

6. Using a cross-tip screwdriver, remove faulty PWA's retaining hardware and remove PWA from cabinet (Figure 2.36-1, [2]).

INSTALLATION STEPS:

1. Position replacement PWA in cabinet and secure using screwdriver and hardware previously removed.

2. Carefully position and secure all wire harness plugs to corresponding numbered jacks.

3. Place cabinet input power circuit breaker in the ON position.

4. Restore cabinet logic power by pressing POWER ON switch on Operator Control Panel.

5. Close and secure cabinet doors.

REPAIR VERIFICATION:

1. Ensure cabinet's Operator Control Panel indications are within normal operating limits:

   o All fault indicators extinguished

   o AC and POWER ON indicators illuminated

2. Perform Maintenance Procedure 4.2 - Repair Verification (KWIK, NFTs, DPMs, etc.) to determine the acceptability of the repair action taken.

3. Assign resources back to operating system as required (see Maintenance Procedure 4.3).

4. Continue normal operation.

PROCEDURE 2.37

PURPOSE:

This routine describes the removal and installation of Interbackpanel Jumper Connectors Part Numbers:

REQUIRED TOOLS:

Hex-head wrench (4mm)
Hex-head wrench (9/64")
Hex-head wrench (1/4")
Insertion/Removal Tool
Part number 58053482-001

REQUIRED TEST EQUIPMENT/MATERIALS:

Maintenance Procedure 4.1 - Isolating/Releasing System Resources
Maintenance Procedure 4.2 - Repair Verification (KWIK, NFTs, DPMs, etc.)
Maintenance Procedure 4.3 - Assigning System Resources

PRECAUTIONS:

Strict compliance with all cautions and warnings is required to preclude injury and/or equipment damage.

CAUTION

USE ESD WRIST STRAPS DURING REPAIR OF CIRCUITRY AND RELATED CABLES AND POWER REGULATORS TO PREVENT EQUIPMENT DAMAGE CAUSED BY ELECTROSTATIC DISCHARGE.

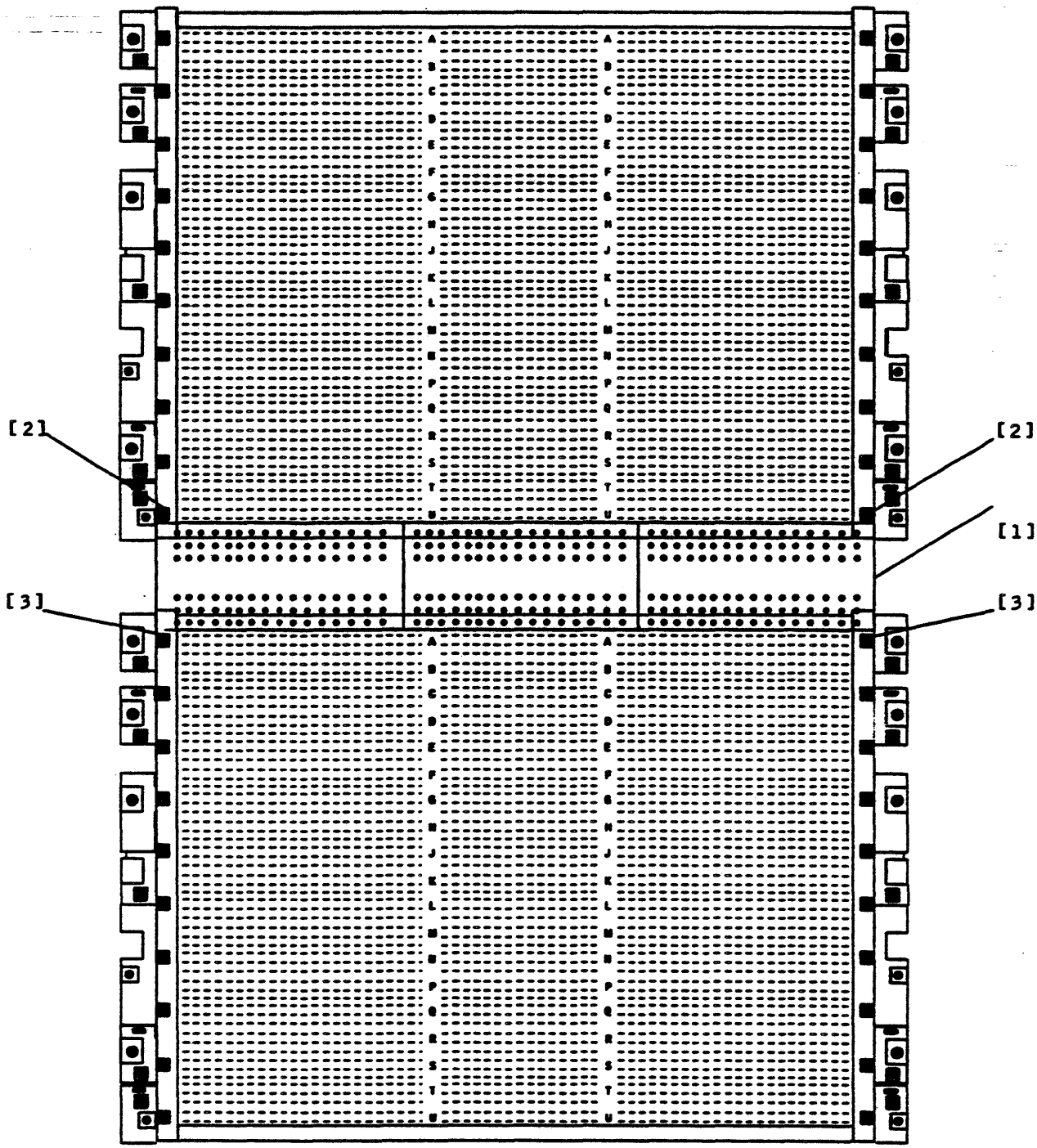

FIGURE 2.37-1. INTERBACKPANEL JUMPER CONNECTOR REMOVAL/INSTALLATION

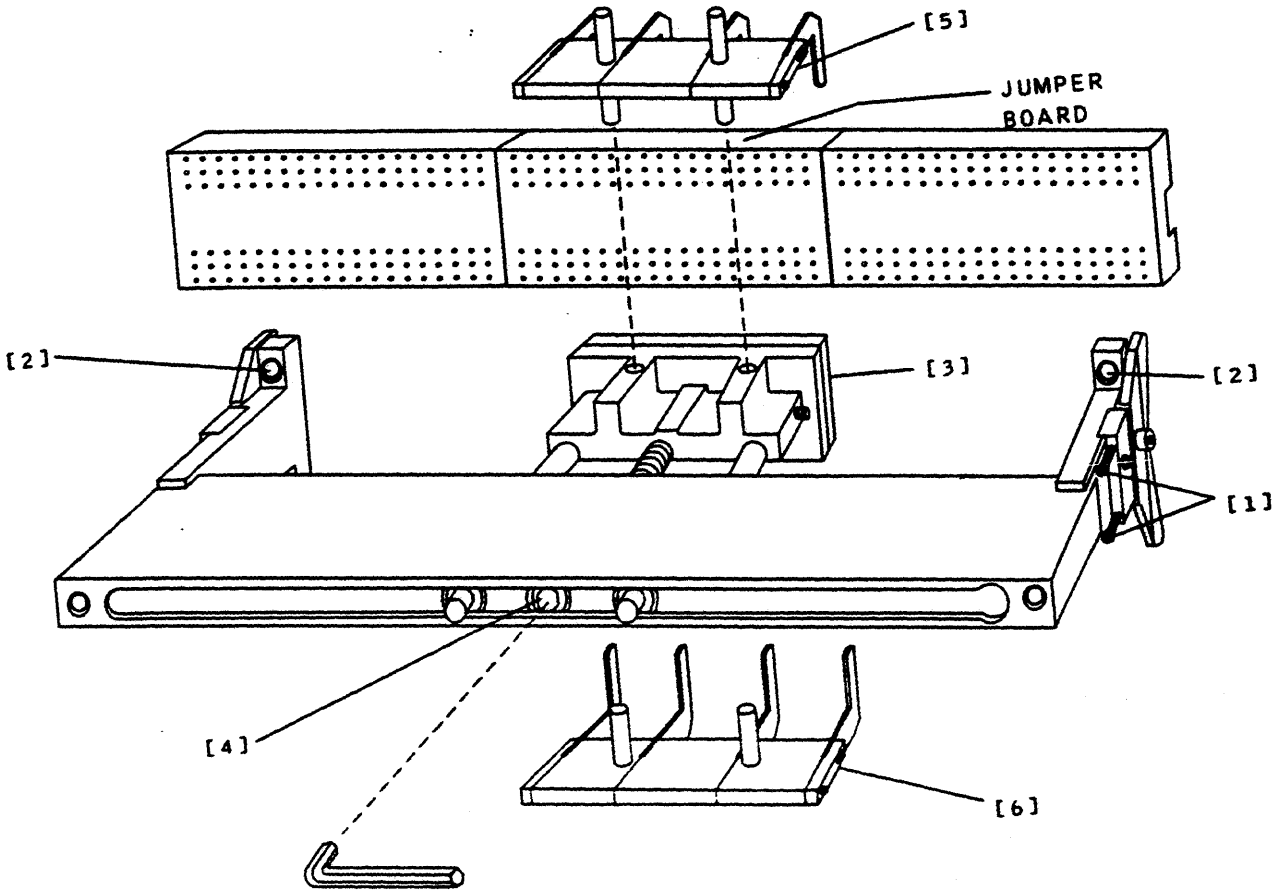

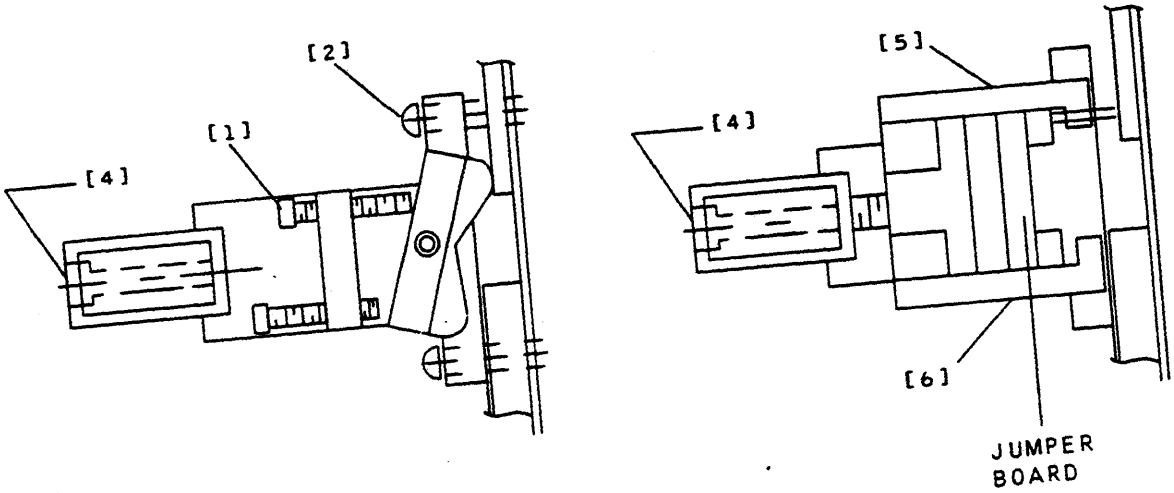

FIGURE 2.37-2. INTERBACKPANEL JUMPER CONNECTOR REMOVAL/INSTALLATION

REMOVAL STEPS:

(1) Release the affected resources from the operating system (see Maintenance Procedure 4.1).

(2) Using a hex-head wrench, release cabinet's door latch mechanisms and open doors of cabinet requiring maintenance (MMU, IOM, IMU or MSP/MTP).

(3) Remove faulty cabinet's logic power by pressing the POWER OFF switch on the Operator Control Panel, then place the Power Control Module's REMOTE/LOCAL switch in the LOCAL position.

CAUTION

DO NOT REMOVE JUMPER BOARDS FROM CABINET WITH POWER ON.

(4) Locate the faulty interbackpanel jumper connector (see Figure 2.37-1, [1]).

(5) Using a cross-tip screwdriver, remove the bottom securing screws (left and right sides) from the card module directly above the faulty jumper connector (see Figure 2.37-1, [2]).

NOTE: The card module securing screws referenced in steps 5 and 6 may be used to mount additional components. These components will have to be removed before proceeding.

(6) Using a cross-tip screwdriver, remove the top securing screws (left and right sides) from the card module directly below the faulty jumper connector (see Figure 2.37-1, [3]).

(7) Remove top and bottom set of removal fingers from the insertion/removal tool.

(8) Loosen the four leveling screws (9/64" hex-head) located on the ends of the insertion/removal tool (see Figure 2.37-2, [1]).

(9) Using a 1/4" hex wrench, turn the slide assembly hex-head screw (see Figure 2.37-2, [4]) clockwise until the slide assembly will not touch the jumper board when the insertion/removal tool is mounted.

(10) Mount the insertion/removal tool to the backpanels using the screws and mounting holes from steps 5 and 6 above (see Figure 2.37-2, [2]). DO NOT TIGHTEN.

(11) Level the insertion/removal tool by following steps 2, 3, and 4 of the leveling procedures written on the instruction label attached to the tool.

NOTE: Backpanels may be of unequal thickness, so it is very important for the tool to be leveled properly.

(12) Tighten the four mounting screws holding the insertion/removal tool.

(13) Move slide assembly portion of insertion/removal tool directly over the jumper board to be removed (see Figure 2.37-2, [3]).

(14) Using a 1/4" hex wrench, turn the slide assembly hex-head screw (see Figure 2.37-2, [4]) counterclockwise until the slide assembly is nearly touching the jumper board.

(15) Insert top set of removal fingers between the jumper board to be removed and the backpanel (see Figure 2.37-2, [5]).

NOTE: The fingers must be centered on the jumper board to be removed. Only one backpanel pin should be outside of the left and right fingers of the tool.

(16) Position the slide assembly to left or right and if necessary turn the hex-head screw clockwise until the two pins on the removal fingers fit into the two holes on the slide assembly.

NOTE: Correct positioning at this point will make it easier to install the bottom removal fingers.

CAUTION

THE BOTTOM SET OF REMOVAL FINGERS MUST BE HELD IN PLACE AT ALL TIMES. THIS IS NECESSARY TO PREVENT THEM FROM DROPPING OFF, WHICH MAY DAMAGE THE FINGERS.

(17) Insert the bottom set of fingers (see Figure 2.37-2, [6]) upward so that they are between the jumper board to be removed and the backpanel. The two pins on the fingers must fit into the two holes on the bottom of the slide assembly.

(18) Using the 1/4" hex wrench, slowly turn slide assembly screw in a clockwise direction until the jumper board has been completely removed from the backpanel pins.

(19) Remove the top and bottom fingers and the jumper board.

INSTALLATION STEPS:

CAUTION

CARD MODULES MUST BE IN CORRECT ALIGNMENT. IF THERE IS ANY DOUBT REFER TO AND PERFORM BACKPANEL ALIGNMENT PROCEDURE 58058994.

(1) Mount and level the insertion/removal tool using Removal Steps 4 through 11.

(2) Using a 1/4" hex wrench, turn slide assembly hex-head screw clockwise far enough to allow the jumper board to be positioned. Do not lock the slide assembly against the tool frame.

PROCEDURE 2.38

PURPOSE: This routine describes the removal and installation of IMU MULTIDROP CABLES

PART NUMBER: 58060481-001 INTERNAL MULTIDROP CABLE
58060482-XXX EXTERNAL MULTIDRIP CABLE

REQUIRED TOOLS

Hex-head wrench (4mm)

REQUIRED TEST EQUIPMENT/MATERIALS

Maintenance Procedure 4.1 - Isolating/Releasing System Resources
Maintenance Procedure 4.2 - Repair Verification (KWIK, NFTs, DPMs, etc.)
Maintenance Procedure 4.3 - Assigning System Resources

PRECAUTIONS: Strict compliance with all cautions and warnings is required to preclude injury and/or equipment damage.

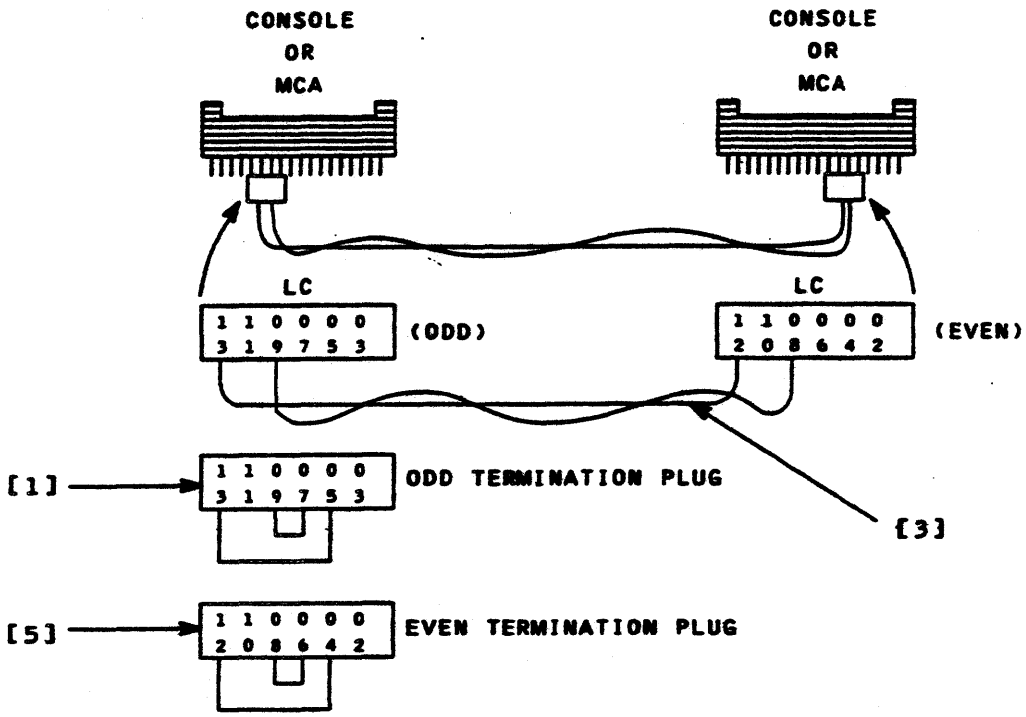

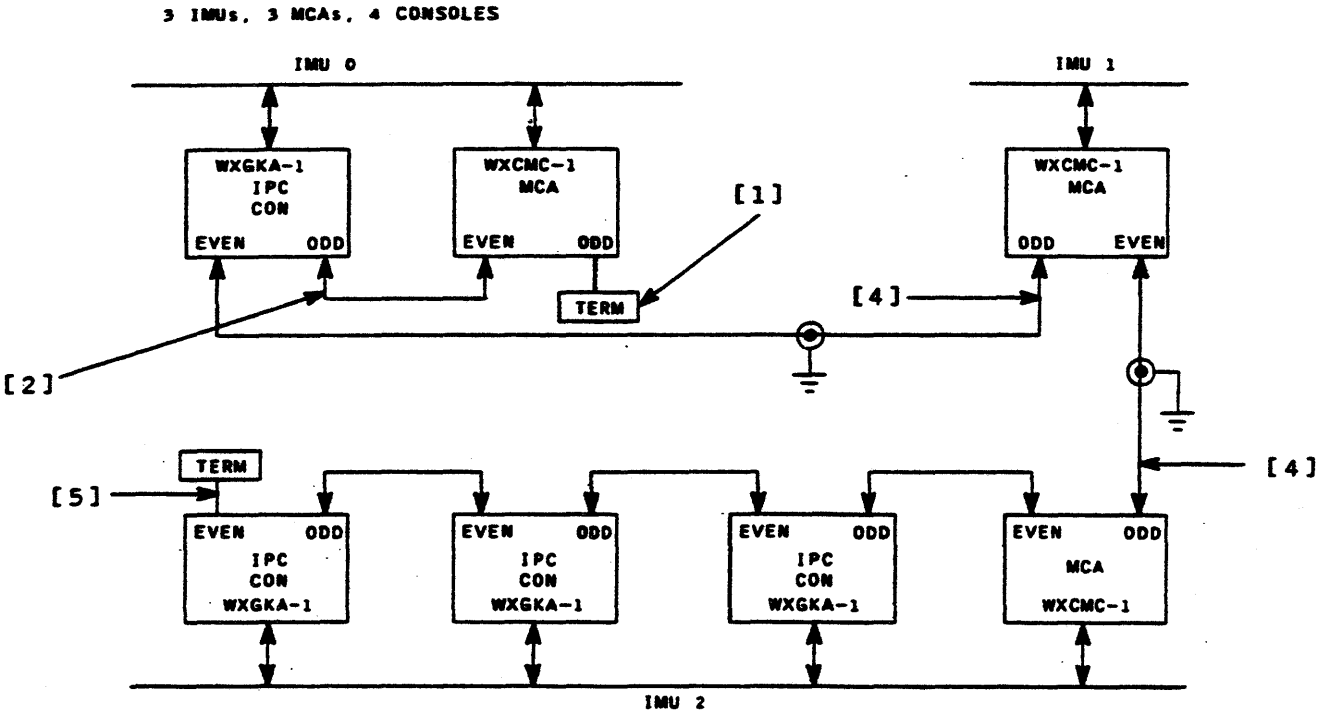

FIGURE 2.38-1. IMU MULTIDROP CABLE REMOVAL/INSTALLATION

REMOVAL STEPS:

NOTE: This procedure requires all resources affected by faulty ORU be released or isolated from operating system prior to start of ORU repair.

1. Isolate (release) affected resources from operating system (see Maintenance Procedure 4.1).

2. Using hex-head wrench, release IMU cabinet's front door latch mechanisms and open doors.

3. Remove cabinet logic power by pressing POWER OFF switch on faulty cabinet's Operator Control Panel.

4. Place Power Control Module's (VC1) Power Control REMOTE/LOCAL switch in LOCAL position.

5. Identify the positions of all WXCMC-1 and WXGKA-1 boards.

6. Using hands, disconnect faulty multidrop cable from the free-edge of the boards.

INSTALLATION STEPS:

NOTE: Multidrop cables are used to daisy chain together a signal that appears on the left free-edge "C" connector of all WXGKA-1 (console) and WXCMC-1 (MCA) boards in the system.

1. Note the position of all WXGKA-1 and WXCMC-1 boards in the system (include all IMU's). The minimum configuration is one WXGKA-1 and one WXCMC-1 board per system. There must be one WXCMC-1 board for each IMU.

2. On the WXCMC-1 board in the first IMU (IMU0) locate the termination plug on the left free edge "C" connector odd numbered pins (see Figure 2.38-1, [1]).

3. Start multidrop cable from the WXCMC-1 board left free edge "C" connector even numbered pins and continue to the next board's left free edge "C" connector odd numbered pins (see Figure 2.38-1, [2]). The even numbered termination plug, if present, must be removed.

NOTE: The cables have even numbered pins on one end and odd numbered pins on the other end (see Figure 2.38-1, [3]).

4. Continue connecting the multidrop cables between the even number pins of one board and the odd numbered pins of the following boards using unjacketed cables inside the cabinet and jacketed cables between cabinets.

5. When the multidrop cable enters a new cabinet, it should always go to the WXCMC-1 board free edge odd numbered pins first, then continue through the cabinet on an even to odd basis (see Figure 2.38-1, [4]).

6. After the last cable is connected at the end of the chain, the even termination plug must be installed on the last board on the free edge even numbered pins (see Figure 2.38-1, [5]).

7. Place Power Control Module's (VC1) Power Control REMOTE/LOCAL switch in REMOTE position.

8. Restore cabinet logic power by pressing POWER ON switch at cabinet's Operator Control Panel.

9. Close and secure cabinet doors.

REPAIR VERIFICATION:

1. Ensure cabinet's Operator Control Panel indications are within normal operating limits:

   o All fault indicators extinguished

   o AC and POWER ON indicators illuminated

2. Perform Maintenance Procedure 4.2 - Repair Verification (KWIK, NFTs, DPMs, etc.) to determine the acceptability of the repair action taken.

3. Assign resources back to operating system (see Maintenance Procedure 4.3).

4. Continue normal operation.

3.0 ORU ADJUSTMENT

PROCEDURE 3.1

PURPOSE: This routine describes the adjustment of Dual 100W Regulator

PART NUMBER: 58035820-xxx

REQUIRED TOOLS

Hex-head wrench (4mm)
Small flat-tip screwdriver (insulated shaft)

REQUIRED TEST EQUIPMENT/MATERIALS

Digital Voltmeter

PRECAUTIONS: Strict compliance with all cautions and warnings is required to preclude injury and/or equipment damage.

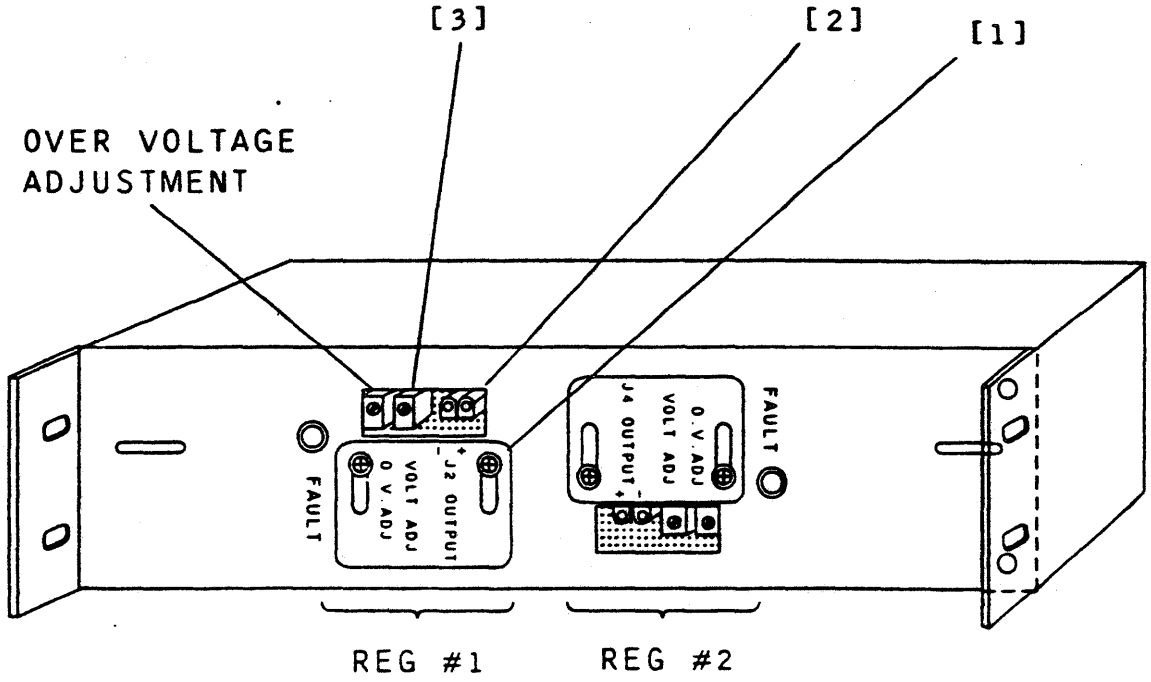

FIGURE 3.1-1. DUAL 100W REGULATOR (58035820) ADJUSTMENT

PREPARATORY STEPS:

1. Position LOCAL/REMOTE switch on Power Control Module in LOCAL position.

2. Remove any margin settings present on the Power Control Module.

3. Using cross-tip screwdriver, release regulator adjustment point cover (Figure 3.1-1, [1]).

ADJUSTMENT STEPS:

1. Using digital voltmeter (DC function) having insulated probe tips, carefully insert leads into respective test points (Figure 3.1-1, [2]).

2. Press and release POWER CONTROL ON switch at the Power Control Module.

3. Verify and adjust power module as necessary:

OVERVOLTAGE (O.V.) ADJUSTMENT VERIFICATION

- o Turn VOLT ADJ clockwise until a reading of 10% above normal is obtained (Figure 3.1-1, [3]).

REG. TYPE	NORMAL	+10%
58035820-003	+12V	+13.2V
	-12V	-13.2V

- o Verify that an O.V. condition (FAULT) occurs at +10% setting, terminating regulator operation.

  NOTE: If an O.V. condition does not occur, turn the O.V. adjustment counterclockwise until it does - back off (CCW) VOLT ADJ .25 of one turn. If an O.V. condition occurs early, turn the O.V. adjustment clockwise three turns, reset fault circuitry (next step), and repeat first part of this note.

- o Reset the fault circuitry by pressing PC ON (ALARM RESET and PC ON for IMU) on Power Control Module.

- o Turn the VOLT ADJ to attain a normal reading for regulator type being adjusted.

4. Position LOCAL/REMOTE switch on Power Control Module in REMOTE position.

5. Press and release POWER ON switch at Operator Control Panel.

6. Continue with maintenance procedure currently in progress.

   NOTE: If this procedure has been accomplished as a result of other than an ORU replacement, go to and perform Maintenance Procedure 4.2 (Repair Verification (KWIK, NFTs, DPMs, etc.) prior to restoring equipment to normal operation.

PROCEDURE 3.2

PURPOSE: This routine describes the adjustment of 24.0 Vdc Voltage Regulator

PART NUMBER: 58047200-xxx

REQUIRED TOOLS

Hex-head wrench (4mm)
Small flat-tip screwdriver (insulated shaft)

REQUIRED TEST EQUIPMENT/MATERIALS

Digital Voltmeter

PRECAUTIONS: Strict compliance with all cautions and warnings is required to preclude injury and/or equipment damage.

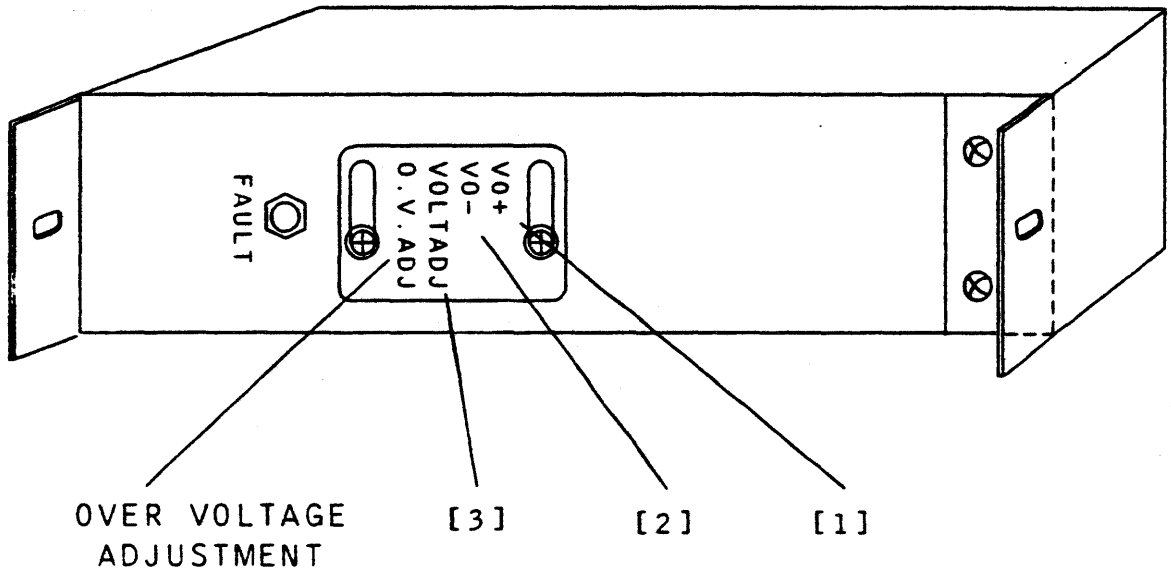

FIGURE 3.2-1. 24.0 VDC REGULATOR (58047200) ADJUSTMENT

PREPARATORY STEPS:

1. Position LOCAL/REMOTE switch on Power Control Module in LOCAL position.

2. Using cross-tip screwdriver, release regulator adjustment point cover (Figure 3.2-1, [1]).

ADJUSTMENT STEPS:

1. Using digital voltmeter (DC function) having insulated probe tips, carefully insert leads into respective test points (Figure 3.2-1, [2]).

2. Press and release POWER CONTROL ON switch at the Power Control Module.

3. Verify and adjust power module as necessary:

   OVERVOLTAGE (O.V.) ADJUSTMENT VERIFICATION

   - Turn VOLT ADJ clockwise until a reading of 10% above normal (26.40V) is obtained (Figure 3.2-1, [3]).

   - Verify that an O.V. condition occurs, terminating regulator operation.

     NOTE: If an O.V. condition does not occur, turn the O.V. adjustment counterclockwise until it does - back off (CCW) VOLT ADJ .25 of one turn. If an O.V. condition occurs early, turn the O.V. adjustment clockwise three turns, reset fault circuitry (next step), and repeat first part of this note.

   - Reset the fault circuitry by pressing PC ON (ALARM RESET and PC ON for IMU) on Power Control Module.

   - Turn VOLT ADJ to attain a reading of 24.0 Vdc.

4. Position LOCAL/REMOTE switch on Power Control Module in REMOTE position.

5. Press and release POWER ON switch at Operator Control Panel.

6. Continue with maintenance procedure currently in progress.

   NOTE: If this procedure has been accomplished as a result of other than an ORU replacement, go to and perform Maintenance Procedure 4.2 (Repair Verification (KWIK, NFTs, DPMs, etc.) prior to restoring equipment to normal operation.

PROCEDURE 3.3

PURPOSE: This routine describes the adjustment of Voltage Monitor PWB

PART NUMBER: 58056729-xxx

REQUIRED TOOLS

Hex-head wrench (4mm)
Flat-tip screwdriver

REQUIRED TEST EQUIPMENT/MATERIALS

Digital Voltmeter

PRECAUTIONS: Strict compliance with all cautions and warnings is required to preclude injury and/or equipment damage.

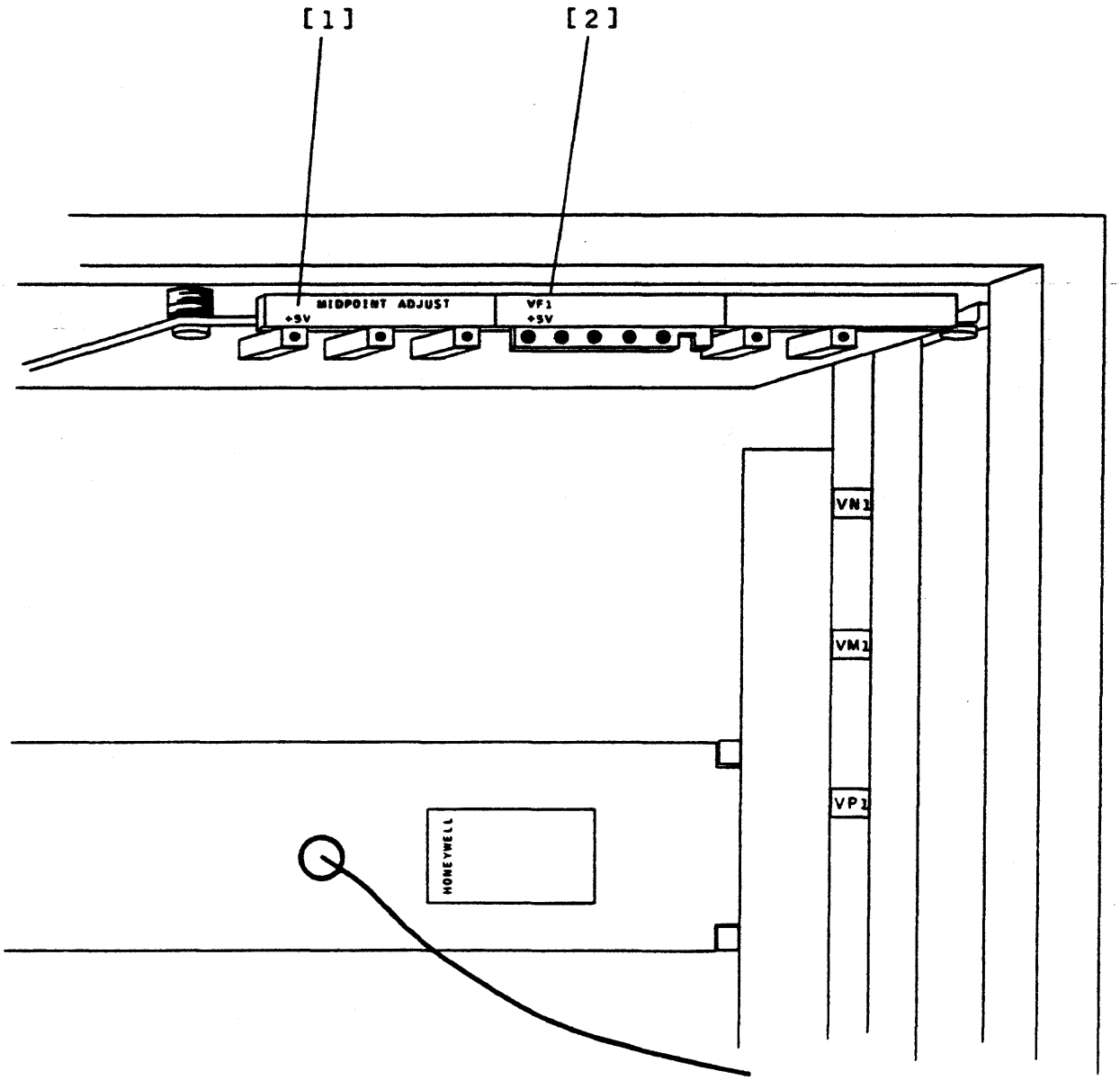

FIGURE 3.3-1. MONITOR PWB (58056729) ADJUSTMENT

PREPARATORY STEPS:

1. Position LOCAL/REMOTE switch on Power Control Module in LOCAL position.

2. Using a digital voltmeter (DC function), carefully insert leads into test points (SENSE +/-) on selected regulator being monitored.

3. Press and release POWER CONTROL ON switch at Power Control Module.

ADJUSTMENT STEPS:

NOTE: All associated power sources must be properly adjusted prior to performing this procedure.

1. Turn selected regulator's VOLT ADJ to attain following reading:

   - o VF1 = 7% above nominal (+5.35 V)

   - o VK1 (IF PRESENT) = 7% above nominal (+5.35 V)

   NOTE: Proper adjustment of LED monitor pot requires multiple steps to ensure proper sensitivity of monitor circuit.

2. Slowly turn pot to be adjusted clockwise (CW) until LED extinguishes (Figure 3.3-1, [1]).

3. Turn pot (slowly) in a counterclockwise (CCW) direction until LED illuminates (Figure 3.3-1, [2]).

4. Readjust pot (slowly) in a clockwise (CW) direction until LED extinguishes once again.

5. Exercising extreme care, readjust (CCW) monitor pot to point where LED just illuminates.

   NOTE: The monitor circuitry is now properly adjusted.

6. Readjust the associated power regulator to it's nominal output setting (+5.0V) - remove meter.

7. Position LOCAL/REMOTE switch on Power Control Module in REMOTE position.

8. Press and release POWER ON switch at Operator Control Panel.

9. Continue with maintenance procedure currently in progress.

   NOTE: If this procedure has been accomplished as a result of other than an ORU replacement, go to and perform Maintenance Procedure 4.2 (Repair Verification (KWIK, NFTs, DPMs, etc.) prior to restoring equipment to normal operation.

PROCEDURE 3.4

PURPOSE: This routine describes adjustment of Refresh Oscillator Board

PART NUMBER: 58059404-003

REQUIRED TOOLS

Hex-head wrench (4mm)
Flat-tip screwdriver

REQUIRED TEST EQUIPMENT/MATERIALS

Oscilloscope (545 or equivalent)
Oscilloscope probes

PRECAUTIONS: Strict compliance with all cautions and warnings is required to preclude injury and/or equipment damage.

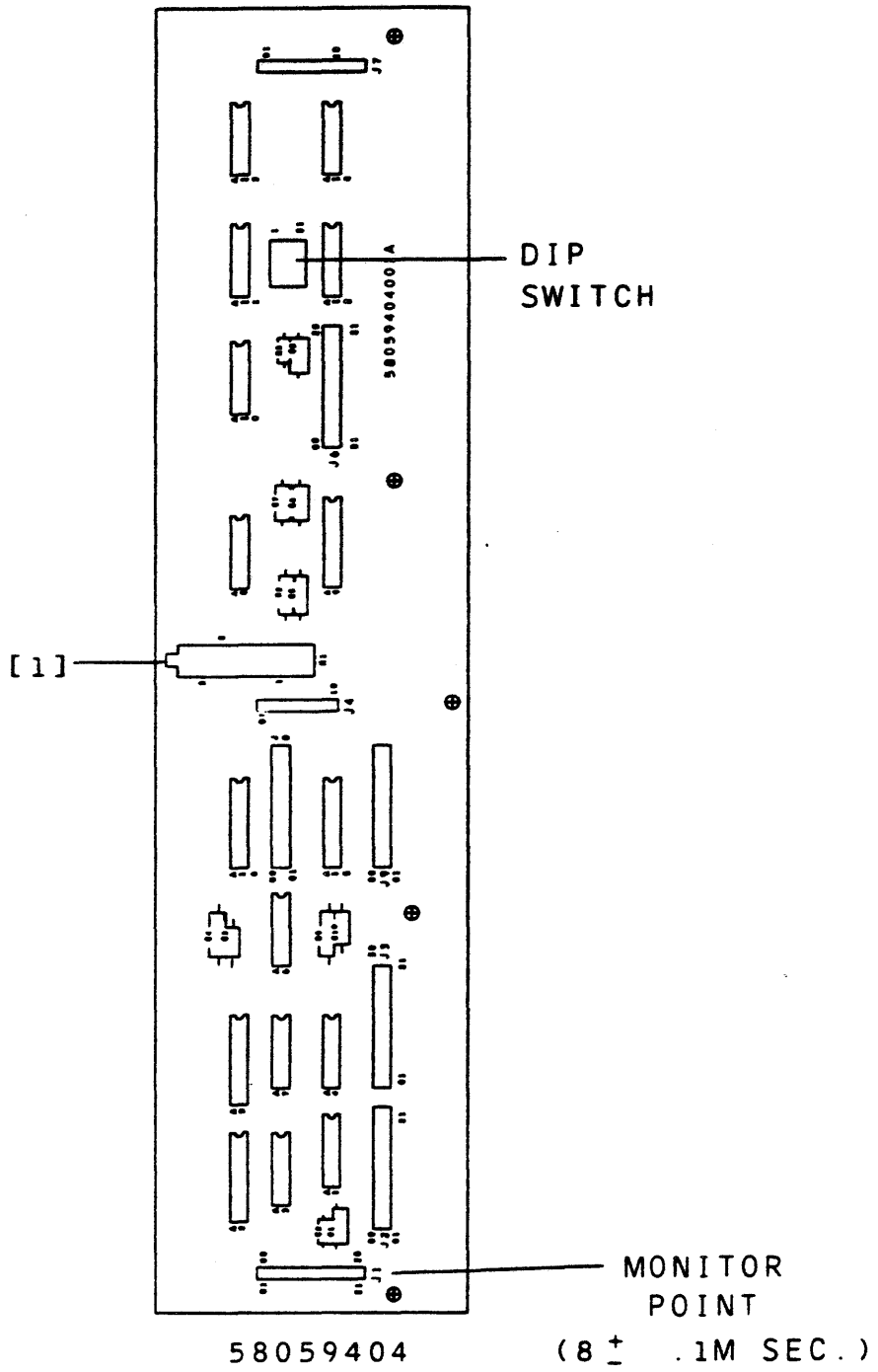

FIGURE 3.4-1. REFRESH OSCILLATOR (58059404-003) ADJUSTMENT

PREPARATORY STEPS:

1. Position LOCAL/REMOTE switch on Power Control Module in LOCAL position.

2. Press and release POWER CONTROL ON switch at Power Control Module.

3. Using digital voltmeter, verify that +5V power supply is properly adjusted.

ADJUSTMENT STEPS:

1. Using an oscilloscope, attach probe to point identified in chart and adjust pot as indicated (Figure 3.4-1, [1]:

PART NUMBER	PROBE	ADJ.	ADJUSTMENT/TOLERANCE
			DIP SWITCH 1 =
			2 =
			3 =
			4 =

2. The oscillator circuitry is now properly adjusted - disconnect all test equipment.

3. Position LOCAL/REMOTE switch on Power Control Module in REMOTE position.

4. Press and release POWER ON switch at Operator Control Panel.

5. Continue with maintenance procedure currently in progress.

PROCEDURE 3.5

PURPOSE: This routine describes the adjustment of Control Regulator

PART NUMBER: 58059745-xxx

REQUIRED TOOLS

Hex-head wrench (4mm)
Small flat-tip screwdriver (insulated shaft)

REQUIRED TEST EQUIPMENT/MATERIALS

Digital Voltmeter

PRECAUTIONS: Strict compliance with all cautions and warnings is required to preclude injury and/or equipment damage.

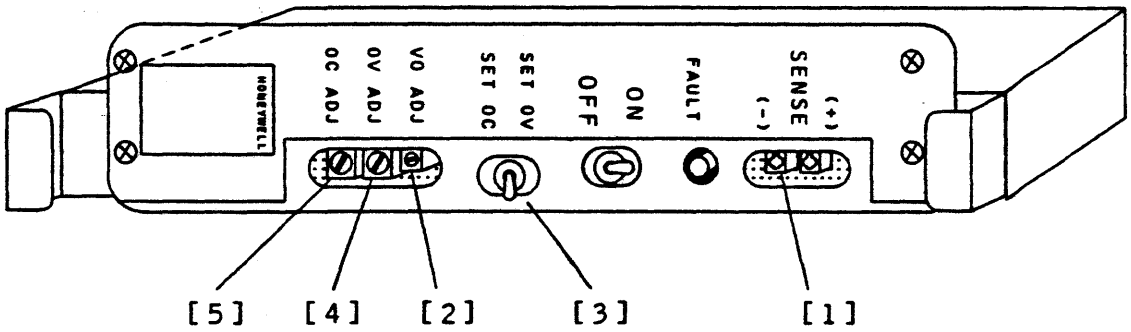

FIGURE 3.5-1. CONTROL REGULATOR (58059745) ADJUSTMEN

PREPARATORY STEPS:

1. Position LOCAL/REMOTE switch on Power Control Module in LOCAL position.

2. Remove any margin settings present on the Power Control Module.

ADJUSTMENT STEPS:

1. Using digital voltmeter (DC function) having insulated probe tips, carefully insert leads into respective test points (Figure 3.5-1, [1]).

2. Press and release POWER CONTROL ON switch at the Power Control Module.

3. Turn VO adjustment until a reading of +5.0 Volts is obtained (Figure 3.5-1, [2]).

4. Verify and adjust power module as necessary:

   OVERVOLTAGE (OV) ADJUSTMENT VERIFICATION

   - Position SET OV/SET OC switch in SET OV.(Figure 3.5-1, [3]).
   - Adjust the OV ADJ pot clockwise (CW) until fault lamp extinguishes (Figure 3.5-1, [4]).
   - Slowly readjust the OV ADJ pot counterclockwise (CCW) until fault lamp just illuminates.
   - Return SET OV/SET OC switch to center (OFF) position.

   OVERCURRENT (OC) ADJUSTMENT VERIFICATION

   - Position SET OV/SET OC switch in SET OC. (Figure 3.5-1, [3]).
   - Adjust the OC ADJ pot clockwise (CW) until fault lamp extinguishes (Figure 3.5-1, [5]).

- o Slowly readjust the OC ADJ pot counterclockwise (CCW) until fault lamp just illuminates.

- o Return SET OV/SET OC switch to center (OFF) position.

5. Position LOCAL/REMOTE switch on Power Control Module in REMOTE position.

6. Press and release POWER ON switch at Operator Control Panel.

7. Continue with maintenance procedure currently in progress.

NOTE: If this procedure has been accomplished as a result of other than an ORU replacement, go to and perform Maintenance Procedure 4.2 (Repair Verification (KWIK, NFTs, DPMs, etc.) prior to restoring equipment to normal operation.

PROCEDURE 3.6

PURPOSE: This routine describes the adjustment of Power Control Module

PART NUMBER: 58059801-xxx

REQUIRED TOOLS

Hex-head wrench (4mm)
Flat-tip screwdriver

REQUIRED TEST EQUIPMENT/MATERIALS

Digital Voltmeter

PRECAUTIONS: Strict compliance with all cautions and warnings is required to preclude injury and/or equipment damage.

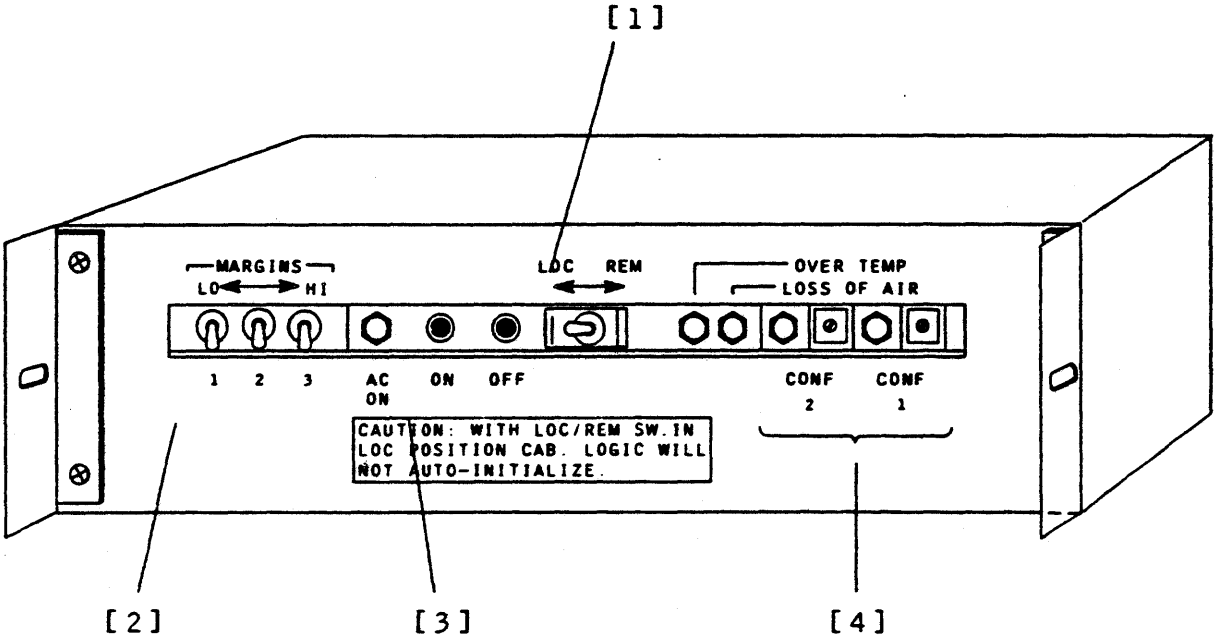

FIGURE 3.6-1. POWER CONTROL MODULE (58059801) ADJUSTMENT

PREPARATORY STEPS:

1. Position LOCAL/REMOTE switch on Power Control Module in LOCAL position (Figure 3.6-1, [1]).

2. Ensure that there are no system margins active on this unit (MARGINS in center position) (Figure 3.6-1, [2]).

3. Using a digital voltmeter (DC function), carefully insert leads into test points of +5V regulator that corresponds to CONF indicator being adjusted.

CABINET	CONF LED	REG. LOCATION
CPU	CONF #1	VG1
MMU/DAU	CONF #1	VF1
	CONF #2	VJ1

4. Press and release POWER CONTROL ON switch at Power Control Module (Figure 3.6-1, [3]).

5. Verify that regulator is adjusted to +5.0V output.

ADJUSTMENT STEPS:

1. Turn selected regulator's VO adjustment to attain a reading 7% above normal (5.35V).

2. Slowly turn pot to be adjusted (either direction) until CONF LED illuminates (Figure 3.6-1, [4]).

   NOTE: Proper adjustment of CONF pot requires multiple steps to ensure proper sensitivity of monitor circuit.

3. Turn pot (slowly) in a counterclockwise (CCW) direction until CONF LED extinguishes.

4. Readjust pot (slowly) in a clockwise (CW) direction until LED illuminates once again.

5. Exercising extreme care, readjust (CCW) monitor pot to point where CONF LED just extinguishes.

   NOTE: The monitor circuitry is now properly adjusted.

6. Readjust the associated power regulator to it's nominal output setting (+5.0 V) - remove meter.

7. Position LOCAL/REMOTE switch on Power Control Module in REMOTE position.

8. Press and release POWER ON switch at Operator Control Panel.

9. Continue with maintenance procedure currently in progress.

   NOTE: If this procedure has been accomplished as a result of other than an ORU replacement, go to and perform Maintenance Procedure 4.2 (Repair Verification (KWIK, NFTs, DPMs, etc.) prior to restoring equipment to normal operation.

PROCEDURE 3.7

PURPOSE: This routine describes the adjustment of Power Regulator Module

PART NUMBER: 58048580-xxx

REQUIRED TOOLS

Hex-head wrench (4mm)
Flat-tip screwdriver

REQUIRED TEST EQUIPMENT/MATERIALS

Digital Voltmeter

PRECAUTIONS: Strict compliance with all cautions and warnings is required to preclude injury and/or equipment damage.

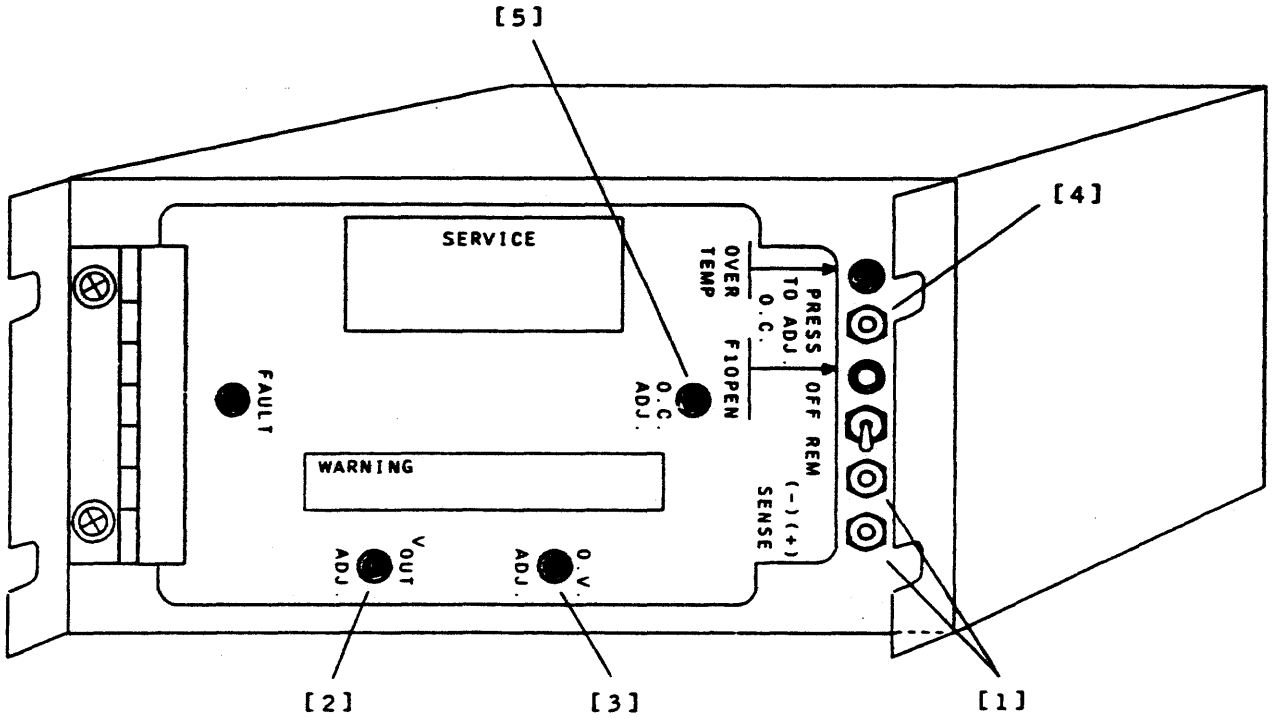

FIGURE 3.7-1. POWER REGULATOR MODULE (58048580) ADJUSTMENT

PREPARATORY STEPS:

1. Position the LOCAL/REMOTE switch on Power Control Module in the LOCAL position.

2. Press and release POWER CONTROL ON switch at the Power Control Module.

3. Verify that the applicable Sector Voltage Control switch (MMU POWER CONTROL PANEL ONLY) is in the ON position.

ADJUSTMENT STEPS:

1. Using a digital voltmeter (DC function), carefully insert the leads into their respective test points on the regulator (see Figure 3.7-1, [1]).

2. Verify and adjust the power module as necessary:

OVERVOLTAGE (O.V.) ADJUSTMENT VERIFICATION

- o Turn the V.O. adjustment clockwise until a reading of 10% above normal is obtained, e.g., 5.50 volts (see Figure 3.7-1, [2]).

- o Verify that an O.V. condition occurs, causing the regulator to fault.

  NOTE: If an O.V. condition does not occur, turn the O.V. adjustment (see Figure 3.7-1, [3]) counterclockwise until it does occur.

- o Turn the V.O. adjustment counterclockwise .25 of a turn.

- o Reset the fault circuitry by toggling the OFF/REMOTE switch on the Regulator Control Module.

- o Turn the V.O. adjustment to attain the correct reading of 5.0 volts.

OVERCURRENT (O.C.) ADJUSTMENT VERIFICATION

- o Remove the digital voltmeter leads from the test points.
- o Press and release the PRESS TO ADJUST O.C. switch (see Figure 3.7-1, [4]).
- o Verify that an O.C. condition occurs, causing the regulator to fault.

NOTE: If an O.C. condition does not occur, adjust the O.C. adjustment (see Figure 3.7-1, [5]) counter-clockwise while depressing the O.C. switch.

3. Position the LOCAL/REMOTE switch on the Power Control Module in the REMOTE position.

4. Press and release the POWER ON switch at the Operator Control Panel.

5. Continue with the maintenance procedure currently in progress.

NOTE: If this procedure has been accomplished as a result of other than an ORU replacement go to and perform Maintenance Procedure 4.3 (System Test and Verification) prior to restoring equipment to normal operation.

PROCEDURE 3.8

PURPOSE: This routine describes the adjustment of Voltage Margins

REQUIRED TOOLS

Hex-head wrench (4mm)
Flat-tip screwdriver

REQUIRED TEST EQUIPMENT/MATERIALS

Digital Voltmeter

PRECAUTIONS: Strict compliance with all cautions and warnings is required to preclude injury and/or equipment damage.

VOLTAGE MARGINS

DPS 8 MARGIN SPECIFICATION:

The DPS 8 circuit set is specified to perform properly at plus or minus 5% on the plus 5 supply voltage. Application of voltage margins outside of this range is beyond the design limits of the circuit. Further, incoming inspection testing and unit testing within the factory is not performed beyond the plus and minus 5% specification level. This means that the performance of a unit when operated outside of the plus and minus 5% margin range is unknown and unpredictable.

GENERAL APPLICATION OF DPS 8 MARGINS:

All DPS 8 units are expected to perform satisfactorily during testing by factory or field personnel when running test and diagnostic programs or GCOS operations within a voltage range of 5 volts (nominal), 5.25 volts (upper limit) and 4.75 volts (lower limit).

FACTORY/FIELD APPLICATION OF DPS 8 MARGINS:

FACTORY:

Factory testing is performed on all units under both T & D and GCOS within the range of 4.75 and 5.25 volts. All units must successfully complete the specified quality test programs for a specified time period. Failure to pass the specified quality test programs within the voltage margin range constitutes a "no ship" condition.

FIELD:

Field CSD personnel, as an element of system installation, upgrade/add-on installation, option installation and FCO installation, shall verify unit operation under both nominal and plus and minus 5% margin voltage condition. Board failures which occur within this range shall be considered DOA (Dead On Arrival). The defective board should be appropriately tagged. (Identifying unit, board location, test which failed, failure conditions, etc., and marked DOA. The voltage level at which the failure occurred should also be indicated on the repair tag.) The board should then be returned via standard logistics procedures.

EXTENDED MARGINS:

Occasionally failures of a highly intermittent nature can occur during factory test or during customer operation which cannot be quickly diagnosed when operating at the nominal or within the plus and minus 5% voltage range. When this situation occurs and the problem cannot be resolved by factory test personnel or local CSD personnel, the then current escalation procedures should be used: e.g., factory specialist or engineering assistance requested by factory test personnel, field specialist assistance requested by local CSD.

If the field or factory specialist is unable to resolve the problem using standard techniques; e.g., scoping, TAC assistance, etc., then a recognized troubleshooting technique for intermittent problem isolation is to use "extended" margins. That is, applying voltage margins beyond the plus and minus 5% level. However, this technique, which forces circuits to operate outside of design specification, must be used with caution and within limits. Two obvious reasons are:

1. The unit can demonstrate a problem unrelated to the original problem extending the down/troubleshooting time.

2. Good boards could be replaced needlessly.

APPLICATION OF "EXTENDED" MARGINS

The following Procedure shall be used by Factory and Field Personnel:

1. Troubleshooting with extended margins shall be performed only by specialist level personnel. Local CSE's should use this technique only with remote field specialist or TAC assistance in the event a field specialist is not locally available.

2. Extended margins shall be used only when all normal troubleshooting techniques have been exhausted and the problem cannot be isolated due to it's intermittent nature.

3. Extended margin voltage level shall NOT exceed 5.5 volts upper limit or 4.5 volts lower limit.

4. Using the above "extended" margins, it is quite likely that failure symptoms will occur that, are totally unrelated to the actual problem originally experienced. In this case, only the board (or boards) should be removed/replaced that are determined by the specialist as contributing to the solution of the original problem.

5. After the problem has been isolated to a particular board (or boards) Field Personnel should, if possible, attempt to isolate the problem on the board tester under margins and repair. If not possible, the board(s) should be returned for repair with appropriate information on the repair tag. This includes - intermittent failure, fails only under extended margins and the voltage level at which the failure occurs. Also include any information about the test or operation that was being performed which caused the failure.

This section is comprised of all operational procedures required during the maintenance of the identified ORUs. For ease of use, each operational procedure is arranged in a manner similar to that of the ORU replacement, service, and adjustment procedures (Tab 2). The following table may be used as a means of locating specific operational procedures.

TABLE 4-1. SYSTEM OPERATION/PROCEDURE CROSS-REFERENCE

GENERAL SUBJECT	SPECIFIC TASK AND PROCEDURE ID	GENERAL SUBJECT	SPECIFIC TASK AND PROCEDURE ID
RESOURCE MANAGEMENT			
RELEASE/ISOLATE	(4.1)		
ASSIGN/INTEGRATE	(4.3)		
REPAIR VERIFICATION	(4.2)		

PROCEDURE 4.1

PURPOSE:

This routine describes the method used for Release/Isolate System Resources

REQUIRED TOOLS:

1. None

REQUIRED TEST EQUIPMENT/MATERIALS:

1. None

PRECAUTIONS:

Strict compliance with any cautions and warnings is required to preclude injury and/or equipment damage.

REFER TO APPENDIX A AND IMU T&D USER GUIDE, MANUAL NUMBER 58014355 FOR ALL INSTRUCTION NECESSARY TO RELEASE AND ISOLATE THE FAULTY UNIT FROM THE OPERATIONAL SYSTEM.

PROCEDURE 4.2

PURPOSE:

This routine describes the method used for Repair Verification Tests

KWIK (Appendix A)
IMU T&D USER GUIDE MANUAL NUMBER
58014355

REQUIRED TOOLS:

1. None

REQUIRED TEST EQUIPMENT/MATERIALS:

1. None

PRECAUTIONS:

Strict compliance with any cautions and warnings is required to preclude injury and/or equipment damage.

REFER TO APPENDIXES A AND IMU T&D USER GUIDE, MANUAL NUMBER 58014355 FOR INFORMATION NECESSARY TO OPERATE CABINET REPAIR VERIFICATION TESTS. APPENDIXES DO NOT INCLUDE INFORMATION ON THE T&D SYSTEM AS OF THIS DATE.