Instruction Manual Volume 3

Honeywell

μ-COMP DDP-516 general purpose I/C digital computer

WEISE

Doc. No. 130071622D
M-968

Instruction Manual

DDP-516 GENERAL PURPOSE COMPUTER

Volume III

DRAWINGS

January 1969

Honeywell

Original printing Sept. 1966
Revised Feb. 1967, July and August 1968, and January 1969
Reprinted September 1968, and January 1969

COPYRIGHT 1969, by Honeywell Inc., Computer Control Division. Contents of this publication may not be reproduced in any form in whole or in part, without permission of the copyright owner. All rights reserved.

NOTE

This manual includes drawings revised in accordance with ECO 3255, 3467, 3686, 3704, 3718, 3767, 3839, 3990, 4084, 4131, 4172, 4217, 4226, 4286, 4350, 4483, 4464, 4763, 4895, 5170, 5641, 5724, 5776, 5906, and 6154.

HONEYWELL LIMITED, COMPUTER CONTROL DIVISION

Instruction Manual Vol III DDP-516 General Purpose Computer Doc.No. 130071622D M968

Please note the following printing error on LBD No. 0.128, Page 29

LBD No. 0.128 READS

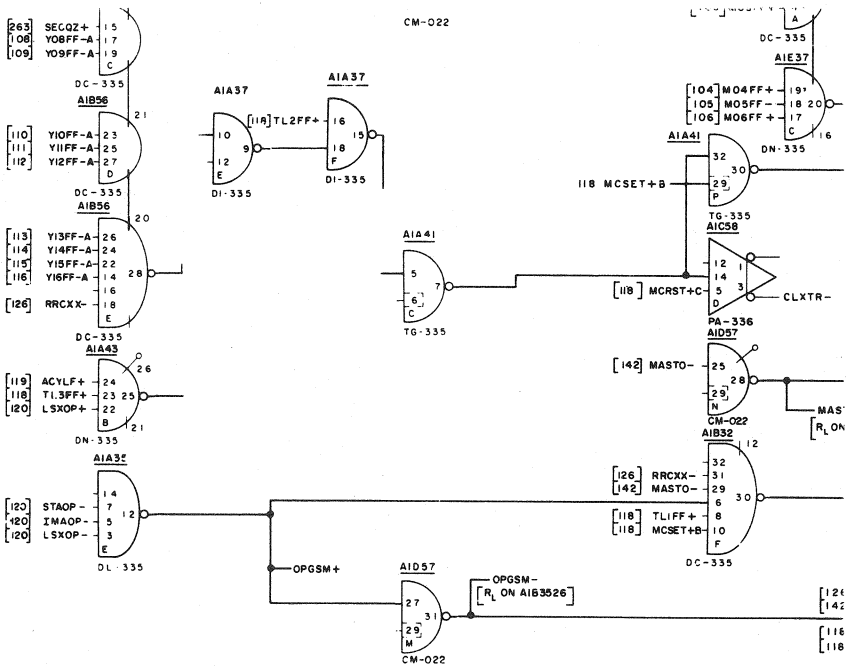

LBD No. 0.128 SHOULD READ

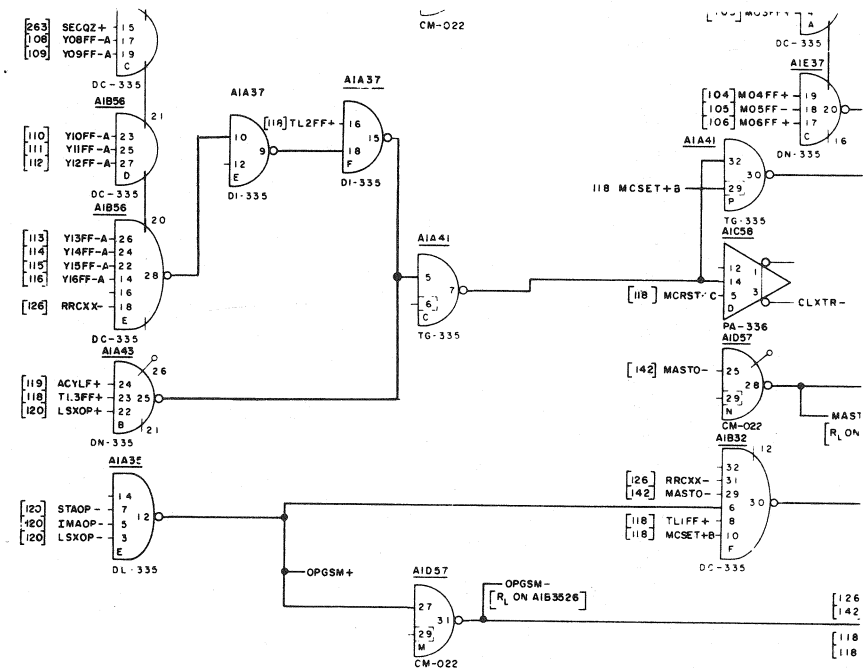

CONTENTS

Logic Page No.	Title	Dwg No.	Rev	Page
0.100	DDP-516 PAC Allocation	016252	H	1
0.101	DDP-516 Column No. 1 Block Diagram	015726	C	2
0.102	DDP-516 Column No. 2 Block Diagram	015727	D	3
0.103	DDP-516 Column No. 3 Block Diagram	015728	B	4
0.104	DDP-516 Column No. 4 Block Diagram	015729	B	5
0.105	DDP-516 Column No. 5 Block Diagram	015730	B	6
0.106	DDP-516 Column No. 6 Block Diagram	015731	B	7
0.107	DDP-516 Column No. 7 Block Diagram	015732	B	8
0.108	DDP-516 Column No. 8 Block Diagram	015733	B	9
0.109	DDP-516 Column No. 9 Block Diagram	015734	B	10
0.110	DDP-516 Column No. 10 Block Diagram	015735	B	11
0.111	DDP-516 Column No. 11 Block Diagram	015736	B	12
0.112	DDP-516 Column No. 12 Block Diagram	015737	B	13
0.113	DDP-516 Column No. 13 Block Diagram	015738	B	14
0.114	DDP-516 Column No. 14 Block Diagram	015739	B	15
0.115	DDP-516 Column No. 15 Block Diagram	015740	B	16
0.116	DDP-516 Column No. 16 Block Diagram	015741	B	17
0.117	DDP-516 Adder Carry Net Block Diagram	015742	A	18
0.118	DDP-516 TLG and Clock Block Diagram	015743	B	19
0.119	DDP-516 Phase Register Block Diagram	015744	C	20
0.120	DDP-516 F Register and OP Decode Block Diagram	015745	B	21
0.121	DDP-516 Shift Counter Block Diagram	015746	B	22
0.122	DDP-516 Control Logic A Block Diagram	015747	D	23
0.123	DDP-516 Control Logic B Block Diagram	015748	C	24
0.124	DDP-516 Control Logic C Block Diagram	015749	D	25
0.125	DDP-516 Control Logic DE Block Diagram	015750	E	26
0.126	DDP-516 Control Logic H Block Diagram	015751	H	27
0.127	DDP-516 Control Logic S Block Diagram	015752	E	28
0.128	DDP-516 Control Logic MX Block Diagram	015753	D	29
0.129	DDP-516 Control Logic PY Block Diagram	015754	D	30
0.130	DDP-516 Shift End Effects Block Diagram	015755	C	31
0.132	DDP-516 Console Lamp Drivers Block Diagram	015756	B	32
0.134	DDP-516 Control Logic Input/Output Block Diagram	015757	F	33
0.135	DDP-516 Interrupt Address Encoding Block Diagram	015758	C	34
0.137	DDP-516 M-Register Expansion	015760	B	34A

Logic Page No.	Title	Dwg No.	Rev	Page
0.138	DDP-516 Output Buses Block Diagram	015761	D	35
0.139	DDP-516 Algorithms Table Block Diagram	016157	A	36
0.140	DDP-516 Console Indicators Block Diagram	015762	B	37
0.141	DDP-516 Console Switches Block Diagram	015763	E	38
0.142	DDP-516 Console and Memory Cable Connector	015764	B	39
0.143	DDP-516 Input/Output Cable Connectors	015765	B	40
0.144	DDP-516 Option Jumpers	015766	A	41
0.145	DDP-516 Y-Register Expansion Block Diagram	015767	C	42
0.148	DDP-516 Power Distribution	015768	G	43
0.149	DDP-516 Memory Drive Fanout Block Diagram	015769	B	44
0.150	Timing and Control Block Diagram	015415	D	45
0.151	Address Buffer Block Diagram	015416	A	46
0.152	X Decoding and Selection Block Diagram	015417	B	47
0.153	Data Channel Bits 1 and 2 Block Diagram	015418	A	48
0.154	Data Channel Bits 3 and 4 Block Diagram	015419	A	49
0.155	Data Channel Bits 5 and 6 Block Diagram	015420	A	50
0.156	Data Channel Bits 7 and 8 Block Diagram	015421	A	51
0.157	Data Channel Bits 9 and 10 Block Diagram	015422	A	52
0.158	Data Channel Bits 11 and 12 Block Diagram	015423	A	53
0.159	Data Channel Bits 13 and 14 Block Diagram	015424	A	54
0.160	Data Channel Bits 15 and 16 Block Diagram	015425	A	55
0.161	Data Channel Bit 17 Block Diagram	015426	A	56
0.162	Timing Diagram Memory Block Diagram	015427	D	57
0.199	Memory Input/Output Cable Block Diagram	015428	A	58
0.340	ASR Controls	015859	F	59
0.341	ASR Buffer Register	015860	F	60
0.342	ASR Input/Output Interface	015858	F	61
0.345	PAC Allocations (ASR)	015654	D	62
0.346	ASR Connectors (ASR 33/35)	015861	C	63
	Coding Drawing DDP-516 (Sheet 1 of 9)	014087	V	64
	Coding Drawing DDP-516 (Sheet 2 of 9)	014087	V	65
	Coding Drawing DDP-516 (Sheet 3 of 9)	014087	V	66
	Coding Drawing DDP-516 (Sheet 4 of 9)	014087	V	67
	Coding Drawing DDP-516 (Sheet 5 of 9)	014087	V	68
	Coding Drawing DDP-516 (Sheet 7 of 9)	014087	V	69
	Coding Drawing DDP-516 (Sheet 8 of 9)	014087	V	70
	Coding Drawing DDP-516 (Sheet 9 of 9)	014087	V	71

CONTENTS (Cont)

Logic Page No.	Title	Dwg No.	Rev.	Page
	Coding ICM-40	010713	D	72
	Cable Routing Drawing (Sheet 1 of 2)	014417	E	73
	Cable Routing Drawing (Sheet 2 of 2)	014417	E	74
	Memory Module Assembly Drawing DDP-516	013005	B	75
0.191	PAC Allocation A4/A5, 4K Tiltout Assembly	017110	C	76
0.192	PAC Allocation 4A/A5, 8K Tiltout Assembly	017111	C	77
0.193	PAC Allocafion A4/A5, 12K Tiltout Assembly	017112	C	78
0.194	PAC Allocation A4/A5, 16K Tiltout Assembly	017113	C	79
0.195	PAC Allocation B1/B2, Back Tiltout Assembly	017114	B	80
0.196	PAC Allocation B1/B2, 16K Tiltout Assembly	017115	B	81
	Coding 516N	020350	D	82

FOREWORD

This volume contains electrical and mechanical reference drawings for the DDP-516 General Purpose Computer. Mechanical drawings follow the logic drawings. The logic drawings are arranged according to the LBD numbers that appear in the upper right-hand corner of each drawing. System cabling information, cable routing diagrams, the main frame PAC location diagram, and the main frame and option cabinet coding diagrams follow the logic diagrams.

The origins of input signals are shown at their destinations on the logic drawings. For example, the input signal EASTL+ on LBD number 0.101, coordinates A4, is preceded by [127], the LBD number of the logic drawing on which the signal originates.

Volume I contains maintenance data and the theory of operation of the Computer Control Processing unit, Memory, and the standard Input/Output interface equipment. The drawings contained in this Volume (III) are referenced throughout Volume I.

Volume II contains the flow charts and instruction analyses of all DDP-516 instructions (except for those that apply to specific options, such as the High Speed Arithmetic Unit). Volume II also contains the function index, which lists the signal mnemonics in alphanumerical sequence. Their definitions, and source are also included.

The reader should take note of areas on the LBDs which are within dashed lines, such as the gate on LBD 0.101, A3. The dashed-line areas contain logic used for certain options. This logic is present only when the computer is equipped with the option noted within the dashed line area. An example is the High Speed Arithmetic Unit.

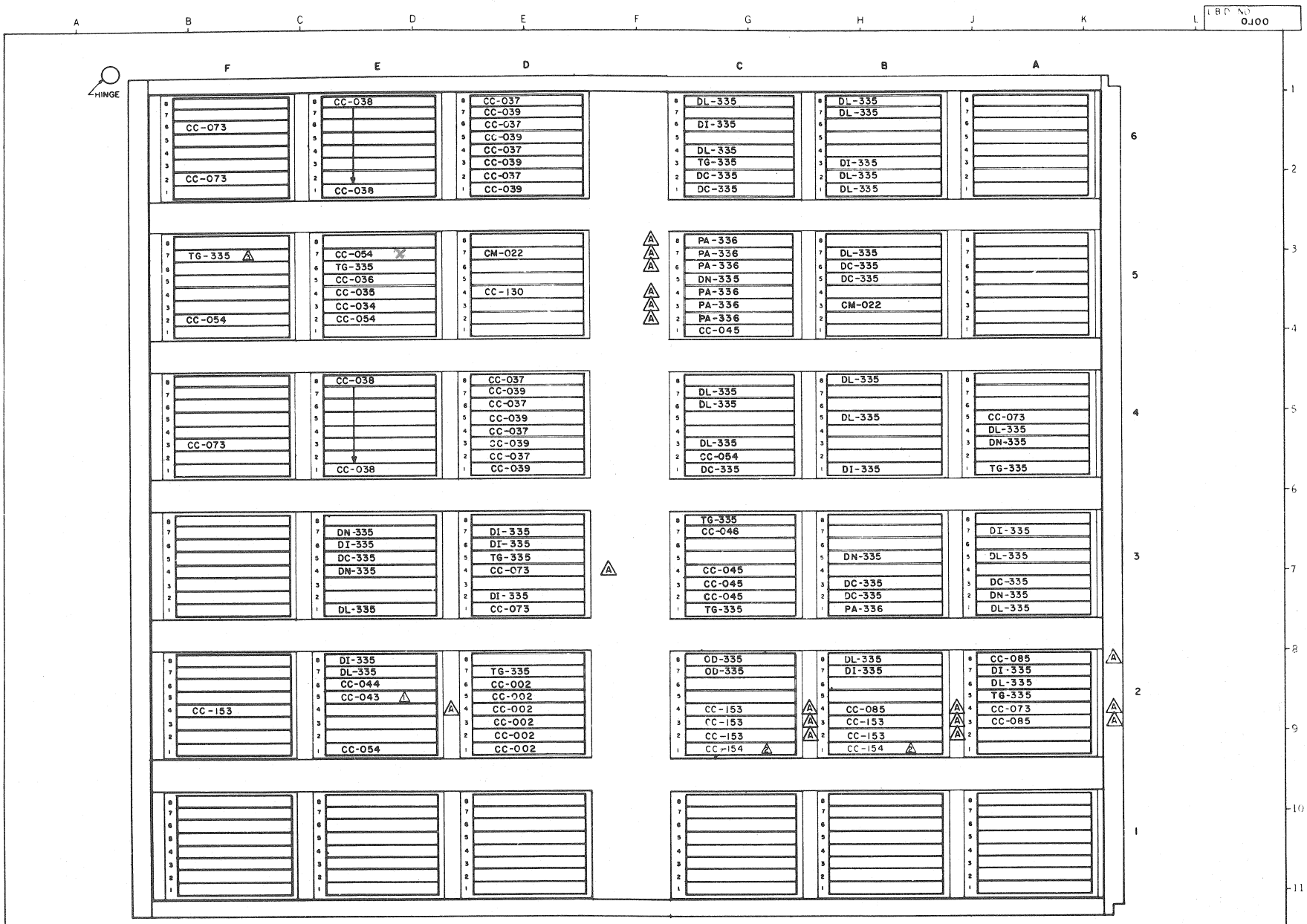

1. FOR 50 HZ OPERATION, CC-043 IN LOCATION E25 IS REPLACED BY A CC-169.
2. CC-154 IN LOCATIONS C21 AND B21 SHOULD BE REMOVED AND PLACED IN THE LAST OPTION AT END OF I/O BUS WHEN OPTIONS ARE USED.
3. THIS PAC REQUIRED WHEN SYSTEM HAS MORE THAN 8K OF MEMORY

REV	REVISIONS	
G	EXT. CHNG. SEE ECO 12-4-68 D.M.H.	ECO 4763
A	RELEASED	ECO 3686
B	EXT. CHANGES 1/23/67	ECO 3767
C	MINOR CHANGES 3/6/67	ECO 4131
D	EXT. CHANGES SEE ECO 5/25/67	ECO 4226
E		ECO 1483
F	EXT. CHANGES SEE ECO 9/20/67	ECO 4894

COMPUTER CONTROL COMPANY INC
FRAMINGHAM MASS. LOS ANGELES 64 CALIF.

DR.	DATE
ENG.	
APP.	
PROJECT NO. 55223	

TITLE
DDP-516
PAC ALLOCATION, MAIN FRAME

SIZE	DWG NO	REV
C	016252	G

1

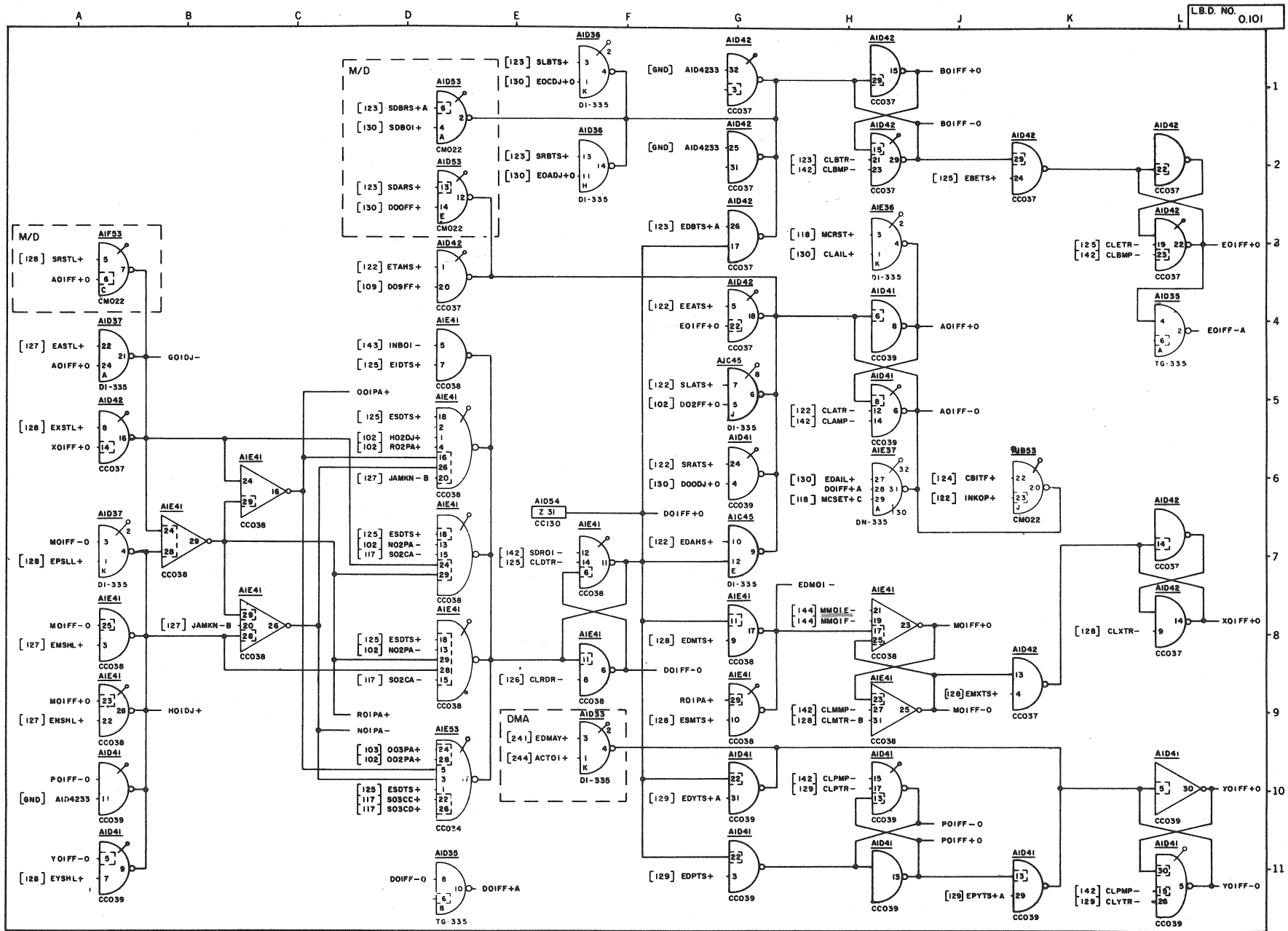
L.B.D. NO. 0.101
M/D
[128] SRSTL+
AOIFF+0
AIF53
CM022
[127] EASTL+
AOIFF+0
AID37
DI-335
GOIDJ-
[128] EXSTL+
XOIFF+0
AID42
CC037
MOIFF-0
[128] EPSLL+
[127] EMSHL+
[128] ENSHL+
HOIDJ+
POIFF-0
[GND] AID4233
YOIFF-0
[128] EYSHL+
[123] SDBRS+A
[130] SDBOI+
[123] SDARS+
[130] DOOFF+
AID53
CM022
[123] SLBTS+
[130] EOCDJ+0
AID36
[123] SRBTS+
[130] EOADJ+0
[122] ETAHS+
[109] DO9FF+
[143] INBOI-
[125] EIDTS+
[125] ESDTS+
[102] HO2DJ+
[102] RO2PA+
[127] JAMKN-B
[102] NO2PA-
[117] SO2CA-
ROIPA+
NOIPA-
[103] OO3PA+
[102] OO2PA+
[125] ESDTS+
[117] SO3CC+
[117] SO3CD+
AIE41
CC038
CC034
DOIFF-0
DOIFF+A
TG-335
AID54
Z 31
CC130
[142] SDROI-
[125] CLDTR-
[126] CLRDR-
DMA
[241] EDMAY+
[244] ACTOI+
[GND] AID4233
[123] EDBTS+A
[122] EEATS+
EOIFF+0
[122] SLATS+
[102] DO2FF+0
[122] SRATS+
[130] DOODJ+0
[122] EDAHS+
DOIFF+0
[126] EDMTS+
DOIFF-0
ROIPA+
[128] ESMTS+
[129] EDYTS+A
[129] EDPTS+
[123] CLBTR-
[142] CLBMP-
[118] MCRST+
[130] CLAIL+
[122] CLATR-
[142] CLAMP-
[130] EDAIL+
DOIFF+A
[118] MCSET+C
DN-335
[124] CBITF+
[122] INKOP+
EDMOI-
[144] MMOIE-
[144] MMOIF-
MOIFF+0
[128] EMXTS+
MOIFF-0
[142] CLMMP-
[128] CLMTR-B
[142] CLPMP-
[129] CLPTR-
POIFF-0
POIFF+0
[129] EPYTS+A
BOIFF+0
BOIFF-0
[125] EBETS+
AOIFF+0
AOIFF-0
[125] CLETR-
[142] CLBMP-
EOIFF+0
EOIFF-A
[128] CLXTR-
XOIFF+0
[142] CLPMP-
[129] CLYTR-
YOIFF+0
YOIFF-0
REVISIONS
S.R. 64-1264
ECO 3767
EXT CHANGES 1/23/67 T.P.
ECO 4763 SEE ECO EXT. CHNG. 12-4-68 D.M.H.
COMPUTER CONTROL COMPANY, INC.
FRAMINGHAM, MASS. / LOS ANGELES 64, CALIF.
DR. A. KURTZER
DATE 2/4/68
ENG.
APP.
PROJECT NO. 55223
TITLE
DDP-516
COLUMN NO. 1
SIZE C
DWG NO. 015726
REV. C

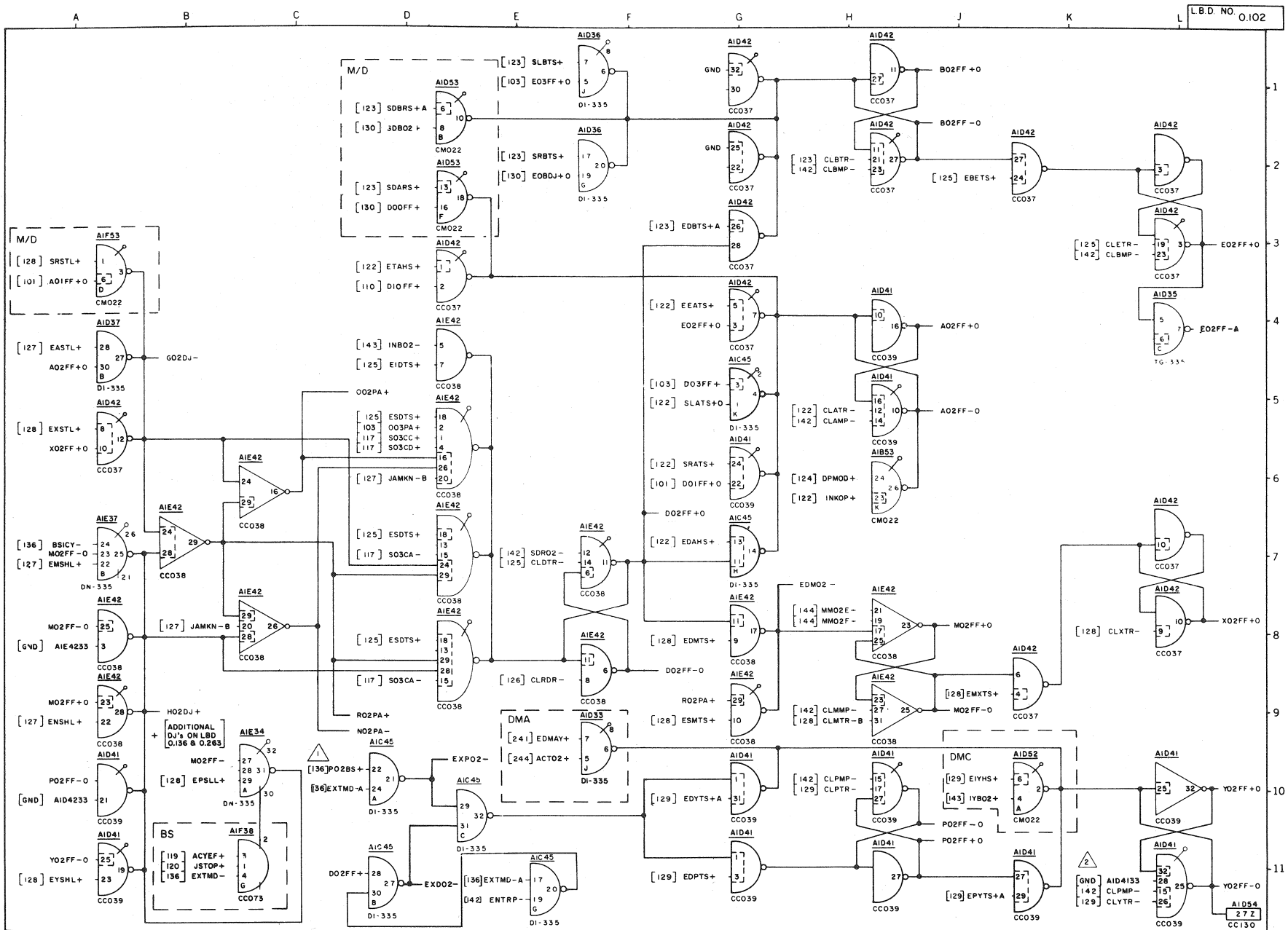

1 WHEN NO EXTENDED ADDRESSING GND PO2BS+

2 WITH EXTENDED ADDRESSING, REMOVE GND FROM AID4128

REV	REVISIONS	CH
A	S.R. 64-1264	
B	ECO 3767	
C	EXT. CHANGES	1/2
C	ECO 4763	
	EXT. CHNG. SEE ECO LOS	4/14

COMPUTER CONTROL COMPANY, INC
FRAMINGHAM MASS LOS ANGELES 64 CALIF

DR.	A. KURTZER	DATE 8/4/66
ENG.	[signature]	8-8-66
APP.	[signature]	8/8/66
PROJECT NO.	55223	

TITLE
DDP-516
COLUMN NO. 2

SIZE	DWG NO.	REV.
C	015727	C

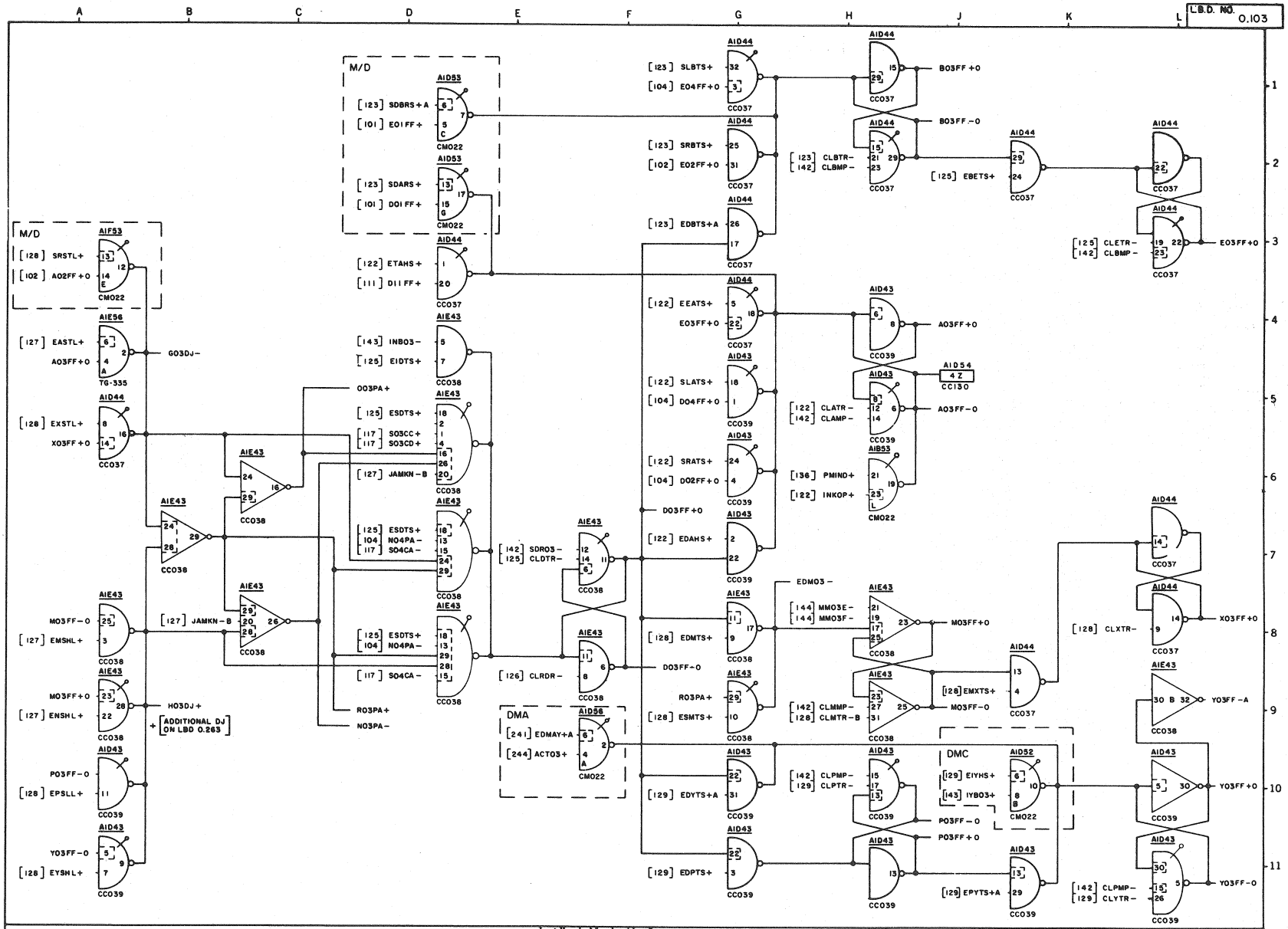

REVISIONS			
S.R. 64-1264	A		
ECO 3767	B		
EXT. CHANGES 1/23/67			
RCL 1/27			

COMPUTER CONTROL COMPANY, INC.
FRAMINGHAM MASS LOS ANGELES 64 CALIF

DR.	A. KURTZER	DATE 8/4/66
ENG.		8-8-66
APP.		8/8/66
PROJECT NO.	55223	

TITLE
DDP-516
COLUMN NO 3

SIZE C | DWG NO. 015728 | REV.

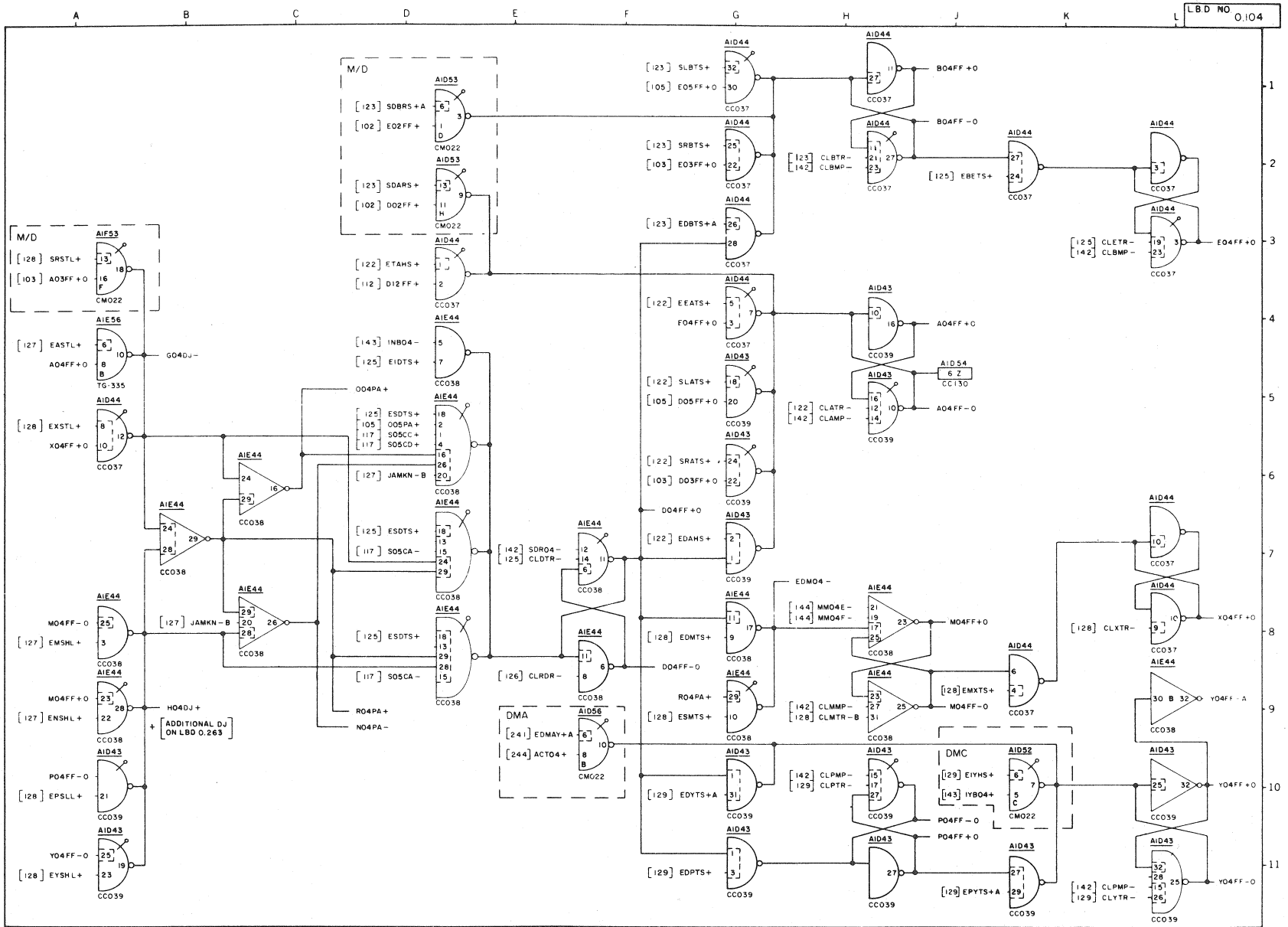

REVISIONS			
S.R. 64-1264	A	ECO 3767	B
EXT CHANGES 1/23/67		RCL 1/27	

COMPUTER CONTROL COMPANY, INC
FRAMINGHAM MASS LOS ANGELES 64 CALIF

DR. A. KURTER	DATE 8/4/66
ENG.	5-8-66
APP. G. C. Hendre	8/8/66
PROJECT NO. 55223	

TITLE
DDP-516
COLUMN NO. 4

SIZE	DWG NO.	REV.
C	015729	

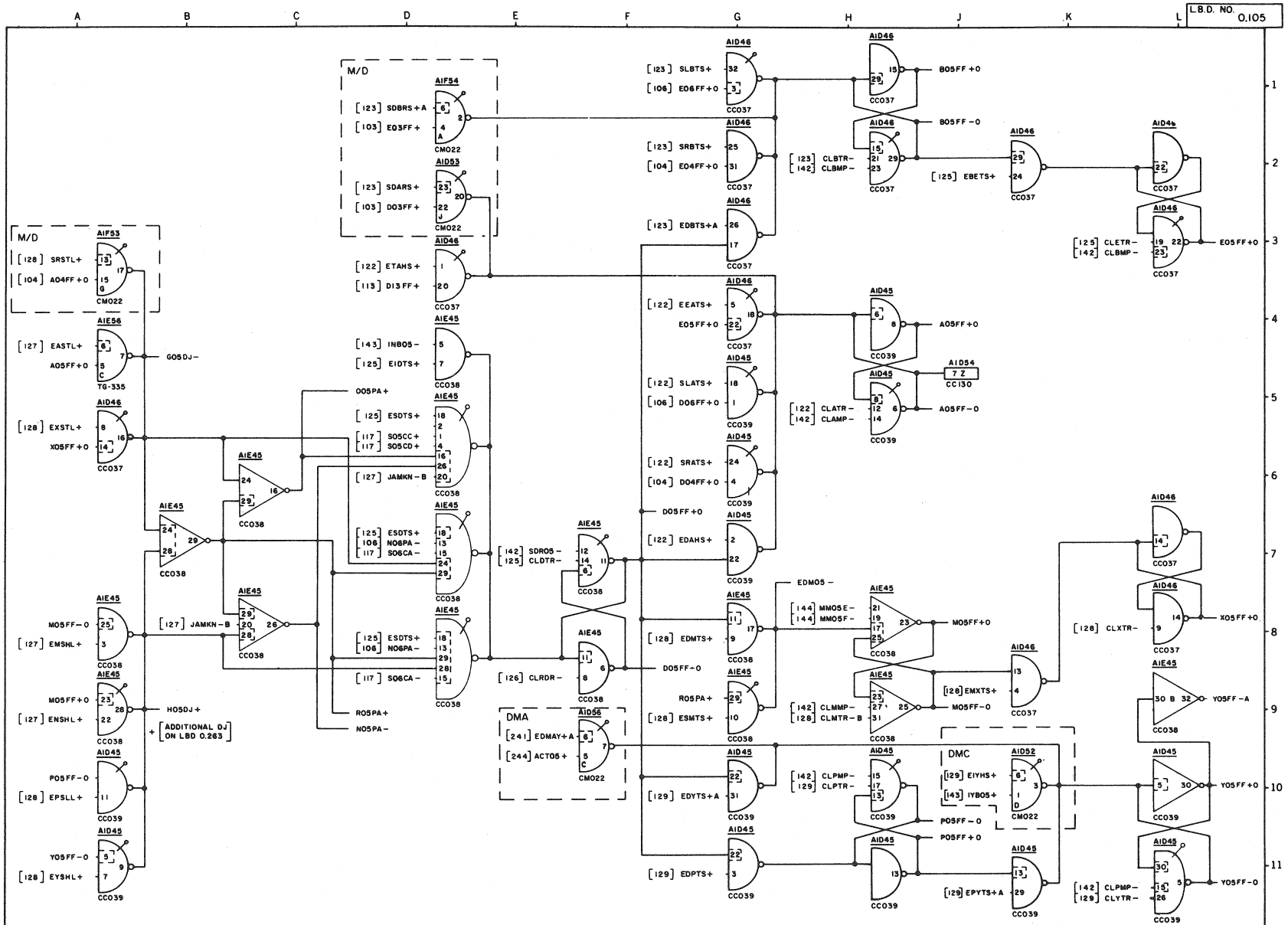
L.B.D. NO. 0.105
M/D
[128] SRSTL+
[104] A04FF+0
AIF53
CM022
AIE56
[127] EASTL+
A05FF+0
TG-335
G05DJ-
AID46
[128] EXSTL+
X05FF+0
CC037
AIE45
CC038
AIE45
CC038
AIE45
CC038

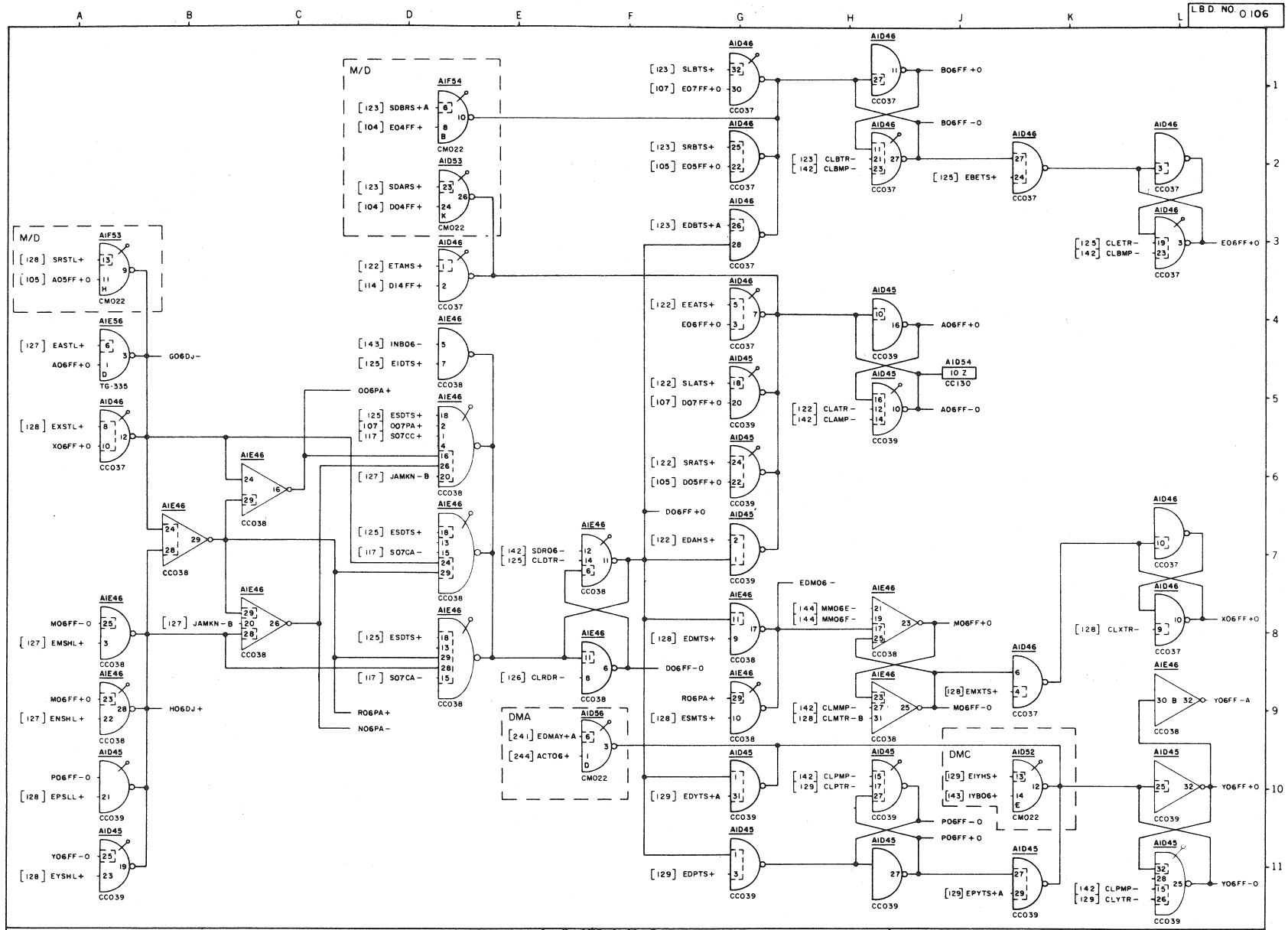
L.B.D. NO. 0106
M/D
[123] SDBRS+A
[104] E04FF+
AIF54
CMO22
[123] SDARS+
[104] D04FF+
AID53
CMO22
[123] SLBTS+
[107] E07FF+0
AID46
CC037
[123] SRBTS+
[105] E05FF+0
[123] EDBTS+A
[122] ETAHS+
[114] D14FF+
[143] INB06-
[125] E1DTS+
AIE46
CC038
[125] ESDTS+
[107] O07PA+
[117] S07CC+
[127] JAMKN-B
[125] ESDTS+
[117] S07CA-
[125] ESDTS+
[117] S07CA-
O06PA+
R06PA+
N06PA-
M/D
[128] SRSTL+
[105] A05FF+0
AIF53
CMO22
[127] EASTL+
A06FF+0
AIE56
TG-335
G06DJ-
[128] EXSTL+
X06FF+0
AID46
CC037
AIE46
CC038
[127] JAMKN-B
AIE46
CC038
M06FF-0
[127] EMSHL+
AIE46
CC038
M06FF+0
[127] ENSHL+
H06DJ+
AIE46
CC038
P06FF-0
[128] EPSLL+
AID45
CC039
Y06FF-0
[128] EYSHL+
AID45
CC039
[142] SDRO6-
[125] CLDTR-
AIE46
CC038
[126] CLRDR-
AIE46
CC038
DMA
[241] EDMAY+A
[244] ACTO6+
AID56
CMO22
[122] EEATS+
E06FF+0
AID46
CC037
[122] SLATS+
[107] D07FF+0
AID45
CC039
[122] SRATS+
[105] D05FF+0
AID45
CC039
D06FF+0
[122] EDAHS+
AID45
CC039
[128] EDMTS+
D06FF-0
AIE46
CC038
R06PA+
[128] ESMTS+
AIE46
CC038
[129] EDYTS+A
AID45
CC039
[129] EDPTS+
AID45
CC039
EDMO6-
[144] MM06E-
[144] MM06F-
AIE46
CC038
[142] CLMMP-
[128] CLMTR-B
AIE46
CC038
[142] CLPMP-
[129] CLPTR-
AID45
CC039
P06FF-0
P06FF+0
AID45
CC039
DMC
[129] EIYHS+
[143] IYBO6+
AID52
CMO22
[129] EPYTS+A
AID45
CC039
[123] CLBTR-
[142] CLBMP-
AID46
CC037
B06FF+0
B06FF-0
[125] EBETS+
AID46
CC037
AID46
CC037
[125] CLETR-
[142] CLBMP-
AID46
CC037
E06FF+0
[122] CLATR-
[142] CLAMP-
AID45
CC039
A06FF+0
A1D54
10 Z
CC130
AID45
CC039
M06FF+0
[128] EMXTS+
M06FF-0
AID46
CC037
[128] CLXTR-
AID46
CC037
AID46
CC037
X06FF+0
AIE46
CC038
Y06FF-A
AID45
CC039
Y06FF+0
AID45
CC039
[142] CLPMP-
[129] CLYTR-
Y06FF-0
CC039
REVISIONS
REV
A
S.R. 64-1264
B
ECO 3767
EXT CHANGES 1/23/67 FB
COMPUTER CONTROL COMPANY, INC
FRAMINGHAM MASS LOS ANGELES 64 CALIF
DR. A. KURTZER
DATE 8/4/66
ENG.
APP.
PROJECT NO. 55223
TITLE
DDP-516
COLUMN NO. 6
SIZE C
DWG NO. 015731
REV.

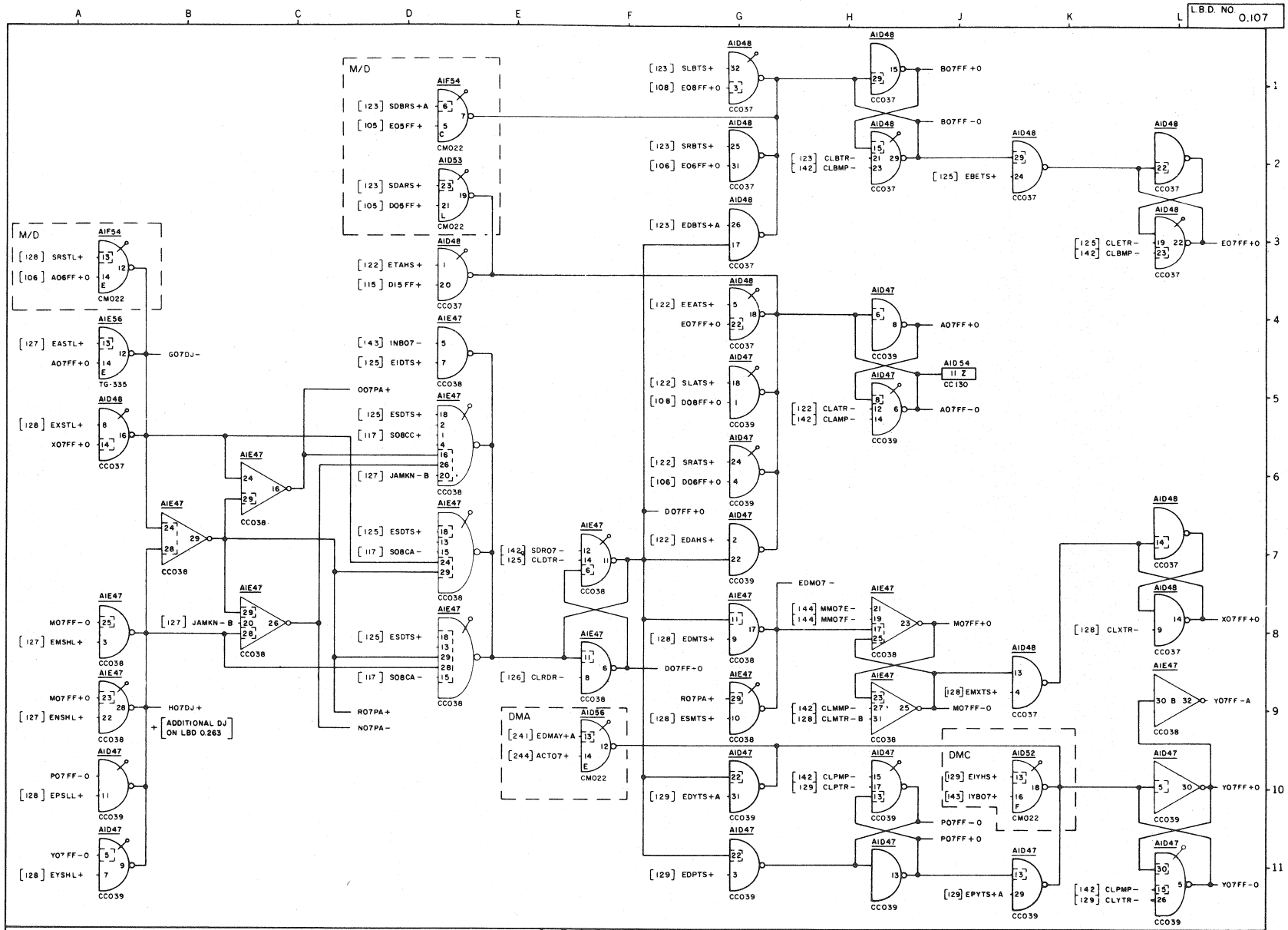
L.B.D. NO. 0.107
M/D
AIF54
[128] SRSTL+
[106] AO6FF+0
CM022
AIE56
[127] EASTL+
AO7FF+0
G07DJ-
TG-335
AID48
[128] EXSTL+
XO7FF+0
CC037
M/D
AIF54
[123] SDBRS+A
[105] EO5FF+
CM022
AID53
[123] SDARS+
[105] DO5FF+
CM022
AID48
[122] ETAHS+
[115] DI5FF+
CC037
AIE47
[143] INBO7-
[125] EIDTS+
CC038
007PA+
AIE47
[125] ESDTS+
[117] SO8CC+
[127] JAMKN-B
CC038
AIE47
CC038
AIE47
CC038
AIE47
[125] ESDTS+
[117] SO8CA-
CC038
AIE47
CC038
AIE47
[125] ESDTS+
[117] SO8CA-
CC038
R07PA+
NO7PA-
AIE47
MO7FF-0
[127] EMSHL+
CC038
AIE47
MO7FF+0
[127] ENSHL+
CC038
H07DJ+
+ [ADDITIONAL DJ ON LBD 0.263]
AID47
PO7FF-0
[128] EPSLL+
CC039
AID47
YO7FF-0
[128] EYSHL+
CC039
[123] SLBTS+
[108] EO8FF+0
AID48
CC037
[123] SRBTS+
[106] EO6FF+0
AID48
CC037
[123] EDBTS+A
AID48
CC037
[122] EEATS+
EO7FF+0
AID48
CC037
[122] SLATS+
[108] DO8FF+0
AID47
CC039
[122] SRATS+
[106] DO6FF+0
AID47
CC039
DO7FF+0
[122] EDAHS+
AID47
CC039
[142] SDRO7-
[125] CLDTR-
AIE47
CC038
[126] CLRDR-
AIE47
CC038
DMA
[241] EDMAY+A
[244] ACTO7+
AID56
CM022
[128] EDMTS+
AIE47
CC038
DO7FF-0
R07PA+
[128] ESMTS+
AIE47
CC038
[129] EDYTS+A
AID47
CC039
[129] EDPTS+
AID47
CC039
EDMO7-
[144] MMO7E-
[144] MMO7F-
AIE47
CC038
MO7FF+0
[142] CLMMP-
[128] CLMTR-B
AIE47
CC038
[142] CLPMP-
[129] CLPTR-
AID47
CC039
PO7FF-0
PO7FF+0
AID47
CC039
DMC
[29] EIYHS+
[143] IYBO7+
AID52
CM022
[129] EPYTS+A
AID47
CC039
[123] CLBTR-
[142] CLBMP-
AID48
CC037
B07FF+0
B07FF-0
AID48
CC037
[125] EBETS+
AID48
CC037
[122] CLATR-
[142] CLAMP-
AID47
CC039
AID54
11 Z
CC130
A07FF+0
A07FF-0
[128] EMXTS+
AID48
CC037
[125] CLETR-
[142] CLBMP-
AID48
CC037
E07FF+0
[128] CLXTR-
AID48
CC037
AID48
CC037
XO7FF+0
AIE47
30 B 32
YO7FF-A
CC038
AID47
CC039
YO7FF+0
AID47
CC039
[142] CLPMP-
[129] CLYTR-
YO7FF-0
CC039
REVISIONS
S.R. 64-1264
ECO 3767
EXT CHANGES 1/23/67- S.P.
RCL 1/31
COMPUTER CONTROL COMPANY, INC
FRAMINGHAM MASS LOS ANGELES 64 CALIF
DR. A. KURTZER DATE 8/4/66
ENG.
APP. 8/8/66
PROJECT NO. 55223
TITLE
DDP-516
COLUMN NO. 7
SIZE C
DWG NO. 015732
REV.

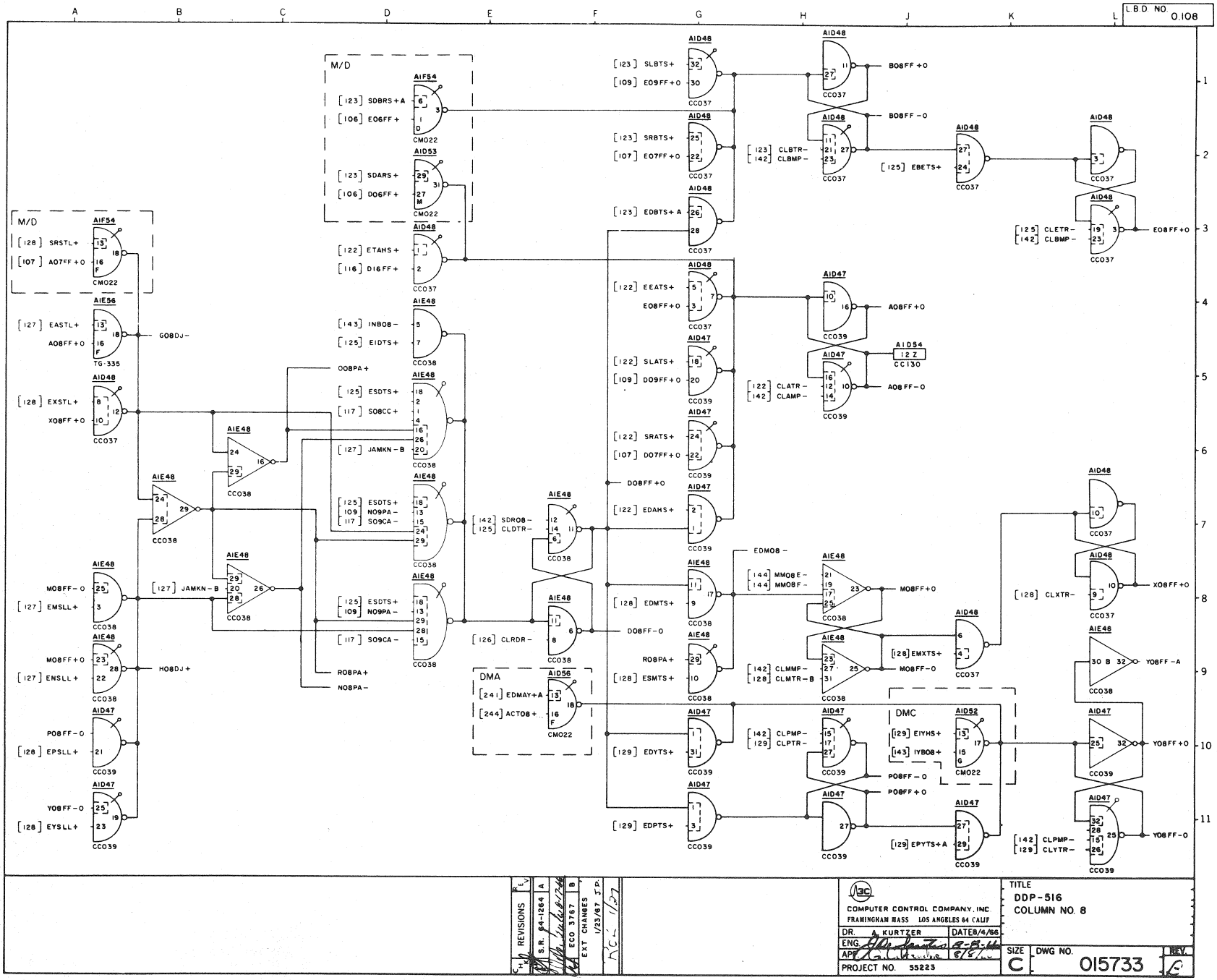
L.B.D. NO. 0.108
M/D
[128] SRSTL+
[107] A07FF+0
AIF54
CM022
[127] EASTL+
A08FF+0
AIE56
TG-335
GO8DJ-
[128] EXSTL+
X08FF+0
AID48
CC037
M08FF-0
[127] EMSLL+
AIE48
CC038
H08DJ+
P08FF-0
[128] EPSLL+
AID47
CC039
Y08FF-0
[128] EYSLL+
[123] SDBRS+A
[106] E06FF+
[123] SDARS+
[106] D06FF+
[122] ETAHS+
[116] D16FF+
[143] IN808-
[125] EIDTS+
CC038
O08PA+
[125] ESDTS+
[117] S08CC+
[127] JAMKN-B
[125] ESDTS+
[109] N09PA-
[117] S09CA-
[127] JAMKN-B
[125] ESDTS+
[109] N09PA-
[117] S09CA-
R08PA+
N08PA-
[142] SDR08-
[125] CLDTR-
[126] CLRDR-
DMA
[241] EDMAY+A
[244] ACT08+
AID56
[123] SLBTS+
[109] E09FF+0
[123] SRBTS+
[107] E07FF+0
[123] EDBTS+A
[122] EEATS+
E08FF+0
[122] SLATS+
[109] D09FF+0
[122] SRATS+
[107] D07FF+0
D08FF+0
[122] EDAHS+
[128] EDMTS+
D08FF-0
[128] ESMTS+
R08PA+
[129] EDYTS+
[129] EDPTS+
EDM08-
[144] MM08E-
[144] MM08F-
M08FF+0
[128] EMXTS+
M08FF-0
[142] CLMMF-
[128] CLMTR-B
[142] CLPMP-
[129] CLPTR-
P08FF-0
P08FF+0
[129] EPYTS+A
DMC
[129] EIYHS+
[143] IY808+
AID52
CM022
B08FF+0
B08FF-0
[123] CLBTR-
[142] CLBMP-
[125] EBETS+
[125] CLETR-
[142] CLBMP-
E08FF+0
A08FF+0
AID54
12 Z
CC130
A08FF-0
[122] CLATR-
[142] CLAMP-
[128] CLXTR-
X08FF+0
Y08FF-A
Y08FF+0
[142] CLPMP-
[129] CLYTR-
Y08FF-0
REVISIONS
S.R. 64-1264
ECO 3767
EXT CHANGES
1/23/67 J.P.
COMPUTER CONTROL COMPANY, INC.
FRAMINGHAM MASS LOS ANGELES 64 CALIF
DR. A. KURTZER
DATE 8/4/66
ENG.
APP.
PROJECT NO. 55223
TITLE
DDP-516
COLUMN NO. 8
SIZE C
DWG NO. 015733
REV. C

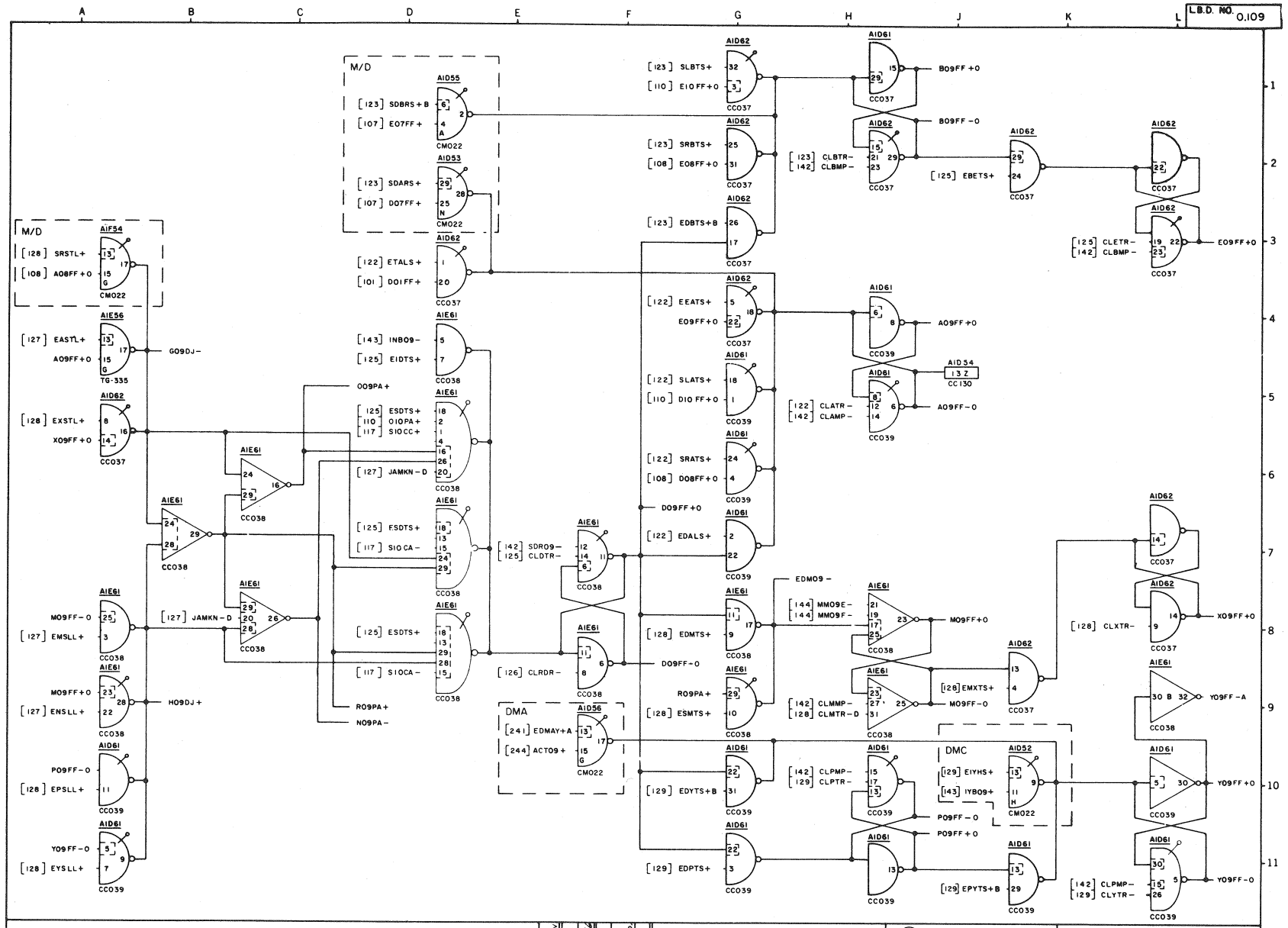

REVISIONS	REV
S.R. 64-1264	A
ECO 3767	B
EXT CHANGES 1/23/67	

COMPUTER CONTROL COMPANY, INC
FRAMINGHAM MASS LOS ANGELES 64 CALIF

DR	A.KURTZER	DATE 8/4/66
ENG		DATE 8-8-66
APR		DATE 8-11-66
PROJECT NO.	55223	

TITLE
DDP-516
COLUMN NO. 9

SIZE	DWG NO.	REV.
C	015734	F

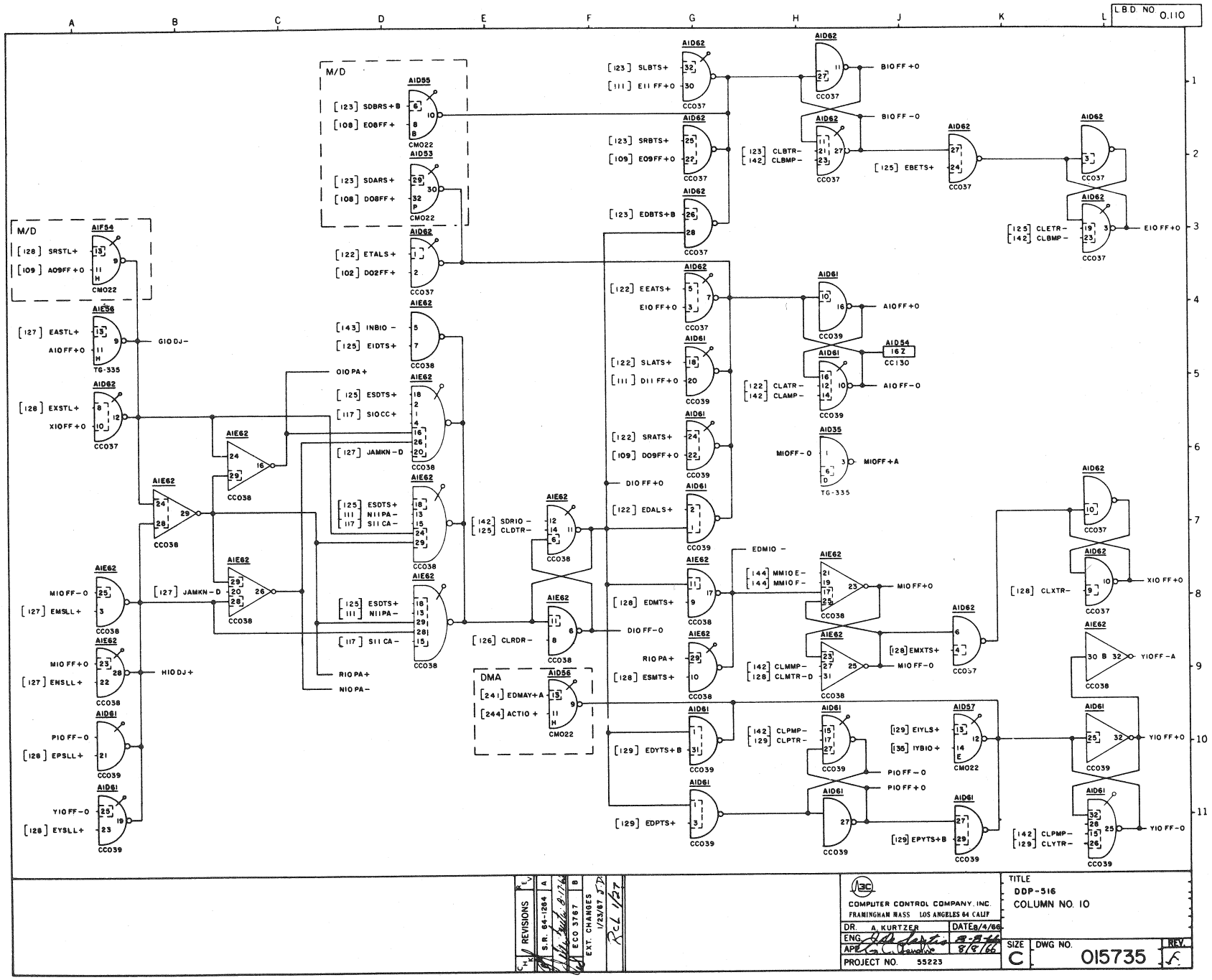
L.B.D. NO. 0.110
M/D
[123] SDBRS+B
[108] E08FF+
[123] SDARS+
[108] D08FF+
[123] SLBTS+
[111] E11 FF+0
[123] SRBTS+
[109] E09FF+0
[123] EDBTS+B
[123] CLBTR-
[142] CLBMP-
B10 FF+0
B10 FF-0
[125] EBETS+
[125] CLETR-
[142] CLBMP-
E10 FF+0
[122] ETALS+
[102] D02FF+
[128] SRSTL+
[109] A09FF+0
[127] EASTL+
A10 FF+0
G10 DJ-
[128] EXSTL+
X10 FF+0
[143] INBIO-
[125] E1DTS+
O10 PA+
[125] ESDTS+
[117] S10CC+
[127] JAMKN-D
[125] ESDTS+
[111] N11PA-
[117] S11 CA-
[125] ESDTS+
[111] N11PA-
[117] S11 CA-
R10 PA+
N10 PA-
[127] JAMKN-D
[122] EEATS+
E10 FF+0
[122] SLATS+
[111] D11 FF+0
[122] SRATS+
[109] D09FF+0
D10 FF+0
[122] EDALS+
[122] CLATR-
[142] CLAMP-
A10 FF+0
A10 FF-0
M10FF-0
M10FF+A
[142] SDRIO-
[125] CLDTR-
[126] CLRDR-
DMA
[241] EDMAY+A
[244] ACTIO+
EDMIO-
[144] MMIO E-
[144] MMIO F-
M10 FF+0
[128] EDMTS+
D10 FF-0
R10 PA+
[128] ESMTS+
[142] CLMMP-
[128] CLMTR-D
M10 FF-0
[128] EMXTS+
[128] CLXTR-
X10 FF+0
Y10FF-A
M10 FF-0
[127] EMSLL+
M10 FF+0
[127] ENSLL+
H10 DJ+
P10 FF-0
[128] EPSLL+
Y10 FF-0
[128] EYSLL+
[129] EDYTS+B
[129] EDPTS+
[142] CLPMP-
[129] CLPTR-
P10 FF-0
P10 FF+0
[129] EIYLS+
[135] IYBIO+
[129] EPYTS+B
Y10 FF+0
[142] CLPMP-
[129] CLYTR-
Y10 FF-0
REVISIONS
S.R. 64-1264
ECO 3767
EXT. CHANGES
1/23/67
RCL 1/27
COMPUTER CONTROL COMPANY, INC.
FRAMINGHAM MASS LOS ANGELES 64 CALIF
DR. A. KURTZER
DATE 8/4/66
ENG.
APP.
PROJECT NO. 55223
TITLE
DDP-516
COLUMN NO. 10
SIZE C
DWG NO. 015735
REV.

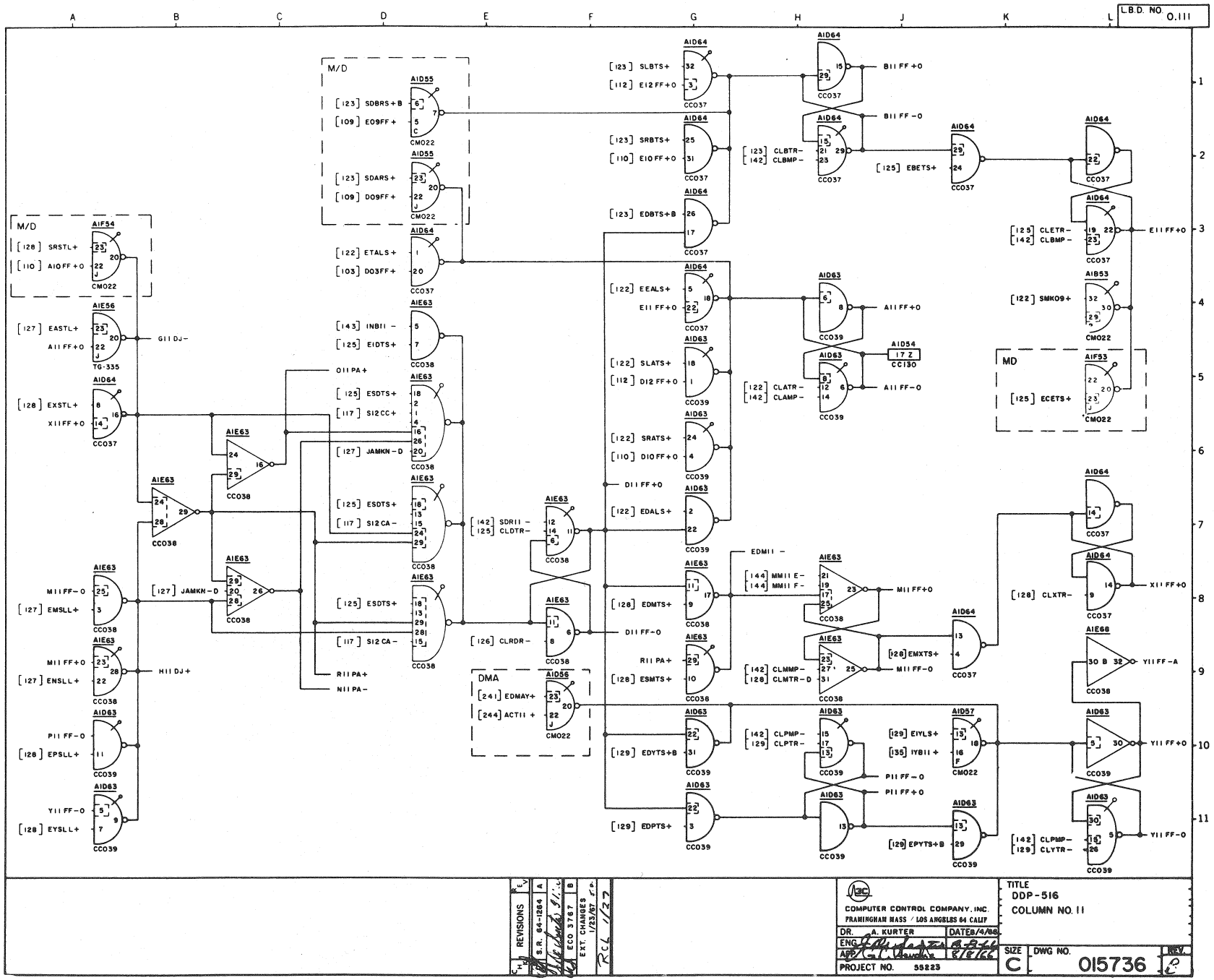
L.B.D. NO. 0.111
M/D
DMA
MD
REVISIONS
S.R. 64-1264
ECO 3767
EXT. CHANGES 1/23/67
RCL 1/27
COMPUTER CONTROL COMPANY, INC.
FRAMINGHAM MASS / LOS ANGELES 64 CALIF
DR. A. KURTER
DATE 8/4/66
ENG.
APP.
PROJECT NO. 55223
TITLE
DDP-516
COLUMN NO. 11
SIZE C
DWG NO. 015736
REV.

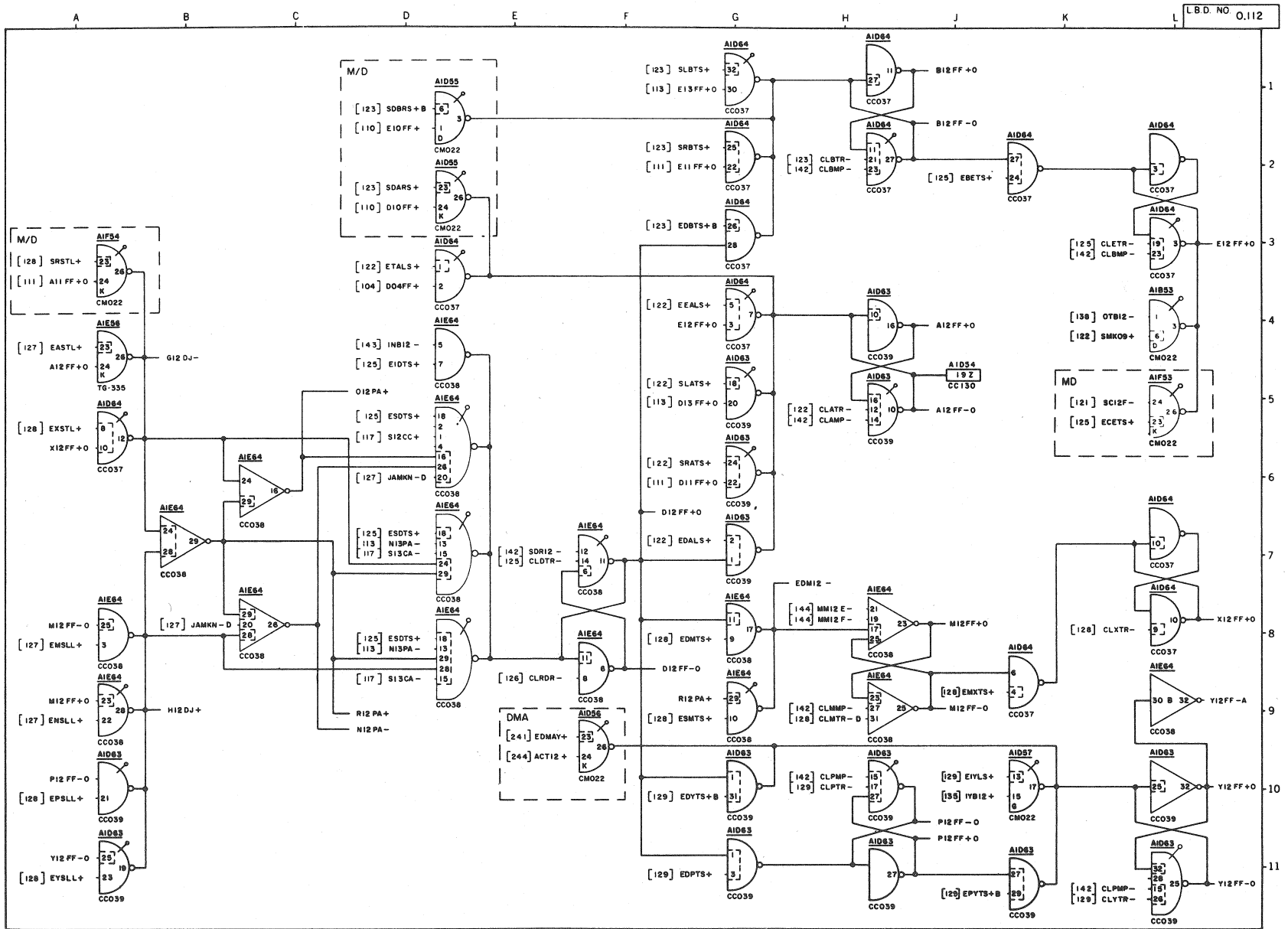
L.B.D. NO. 0.112
M/D
[128] SRSTL+
[111] A11FF+0
AIF54
CMO22
[127] EASTL+
A12FF+0
AIE64
TG-335
G12DJ-
[128] EXSTL+
X12FF+0
AID64
CCO37
M12FF-0
[127] EMSLL+
M12FF+0
[127] ENSLL+
H12DJ+
P12FF-0
[128] EPSLL+
AID63
Y12FF-0
[128] EYSLL+
[127] JAMKN-D
[123] SDBRS+B
[110] E10FF+
AID55
CMO22
[123] SDARS+
[110] D10FF+
[122] ETALS+
[104] D04FF+
[143] INB12-
[125] E1DTS+
O12PA+
[125] ESDTS+
[117] S12CC+
[127] JAMKN-D
[125] ESDTS+
[113] N13PA-
[117] S13CA-
[125] ESDTS+
[113] N13PA-
[117] S13CA-
R12PA+
N12PA-
AIE64
CCO38
[142] SDR12-
[125] CLDTR-
[126] CLRDR-
DMA
[241] EDMAY+
[244] ACT12+
AID56
[123] SLBTS+
[113] E13FF+0
[123] SRBTS+
[111] E11FF+0
[123] EDBTS+B
[122] EEALS+
E12FF+0
[122] SLATS+
[113] D13FF+0
[122] SRATS+
[111] D11FF+0
D12FF+0
[122] EDALS+
[126] EDMTS+
D12FF-0
R12PA+
[128] ESMTS+
[129] EDYTS+B
[129] EDPTS+
AID64
AID63
CCO39
B12FF+0
B12FF-0
[123] CLBTR-
[142] CLBMP-
[125] EBETS+
A12FF+0
A12FF-0
A1D54
19Z
CC130
[122] CLATR-
[142] CLAMP-
EDMI2-
[144] MMI2E-
[144] MMI2F-
M12FF+0
[142] CLMMP-
[126] CLMTR-D
[126] EMXTS+
M12FF-0
[142] CLPMP-
[129] CLPTR-
P12FF-0
P12FF+0
[129] EIYLS+
[136] IYB12+
[129] EPYTS+B
MD
[121] SCI2F-
[125] ECETS+
AIF53
[125] CLETR-
[142] CLBMP-
E12FF+0
[138] OTB12-
[122] SMKO9+
AIB53
[128] CLXTR-
X12FF+0
Y12FF-A
Y12FF+0
[142] CLPMP-
[129] CLYTR-
Y12FF-0
REVISIONS
REV
CHK
A
S.R. 64-1264
B
ECO 3787
EXT CHANGES
1/23/67
COMPUTER CONTROL COMPANY, INC.
FRAMINGHAM MASS LOS ANGELES 64 CALIF
DR. A. KURTER
DATE 8/4/66
ENG.
APP.
PROJECT NO. 98223
TITLE
DDP-516
COLUMN NO. 12
SIZE C
DWG NO. 015737
REV. C

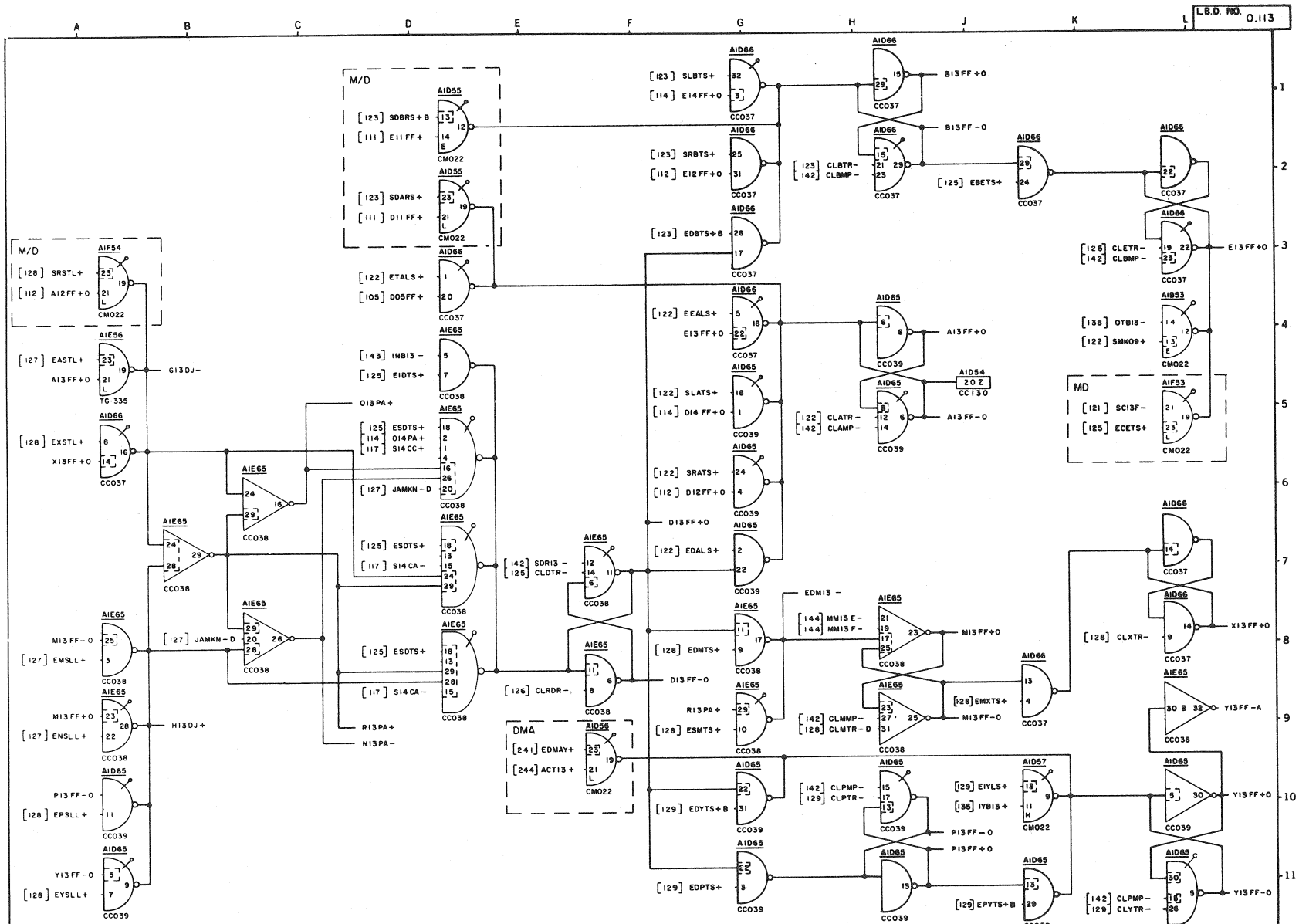
L.B.D. NO. 0.113
M/D
[128] SRSTL+
[112] A12FF+0
AIF54
CM022
[127] EASTL+
A13FF+0
AIE56
TG-335
G13DJ-
[128] EXSTL+
X13FF+0
AID66
CC037
M13FF-0
[127] EMSLL+
M13FF+0
[127] ENSLL+
H13DJ+
P13FF-0
[128] EPSLL+
Y13FF-0
[128] EYSLL+
AIE65
CC038
CC039
[127] JAMKN-D
O13PA+
R13PA+
N13PA-
[125] ESDTS+
O14PA+
S14CC+
[127] JAMKN-D
[125] ESDTS+
S14CA-
[125] ESDTS+
S14CA-
[143] INBI3-
[125] EIDTS+
[122] ETALS+
[105] DOSFF+
AID55
CM022
[123] SDBRS+B
[111] E11FF+
[123] SDARS+
[111] D11FF+
[142] SDRI3-
[125] CLDTR-
[126] CLRDR-
DMA
[241] EDMAY+
[244] ACTI3+
AID56
[123] SLBTS+
[114] E14FF+0
[123] SRBTS+
[112] E12FF+0
[123] EDBTS+B
[122] EEALS+
E13FF+0
[122] SLATS+
[114] D14FF+0
[122] SRATS+
[112] D12FF+0
D13FF+0
[122] EDALS+
[128] EDMTS+
D13FF-0
R13PA+
[128] ESMTS+
[129] EDYTS+B
[129] EDPTS+
[123] CLBTR-
[142] CLBMP-
B13FF+0
B13FF-0
[125] EBETS+
[122] CLATR-
[142] CLAMP-
A13FF+0
A13FF-0
AID54
20Z
CC130
EDMI3-
[144] MMI3E-
[144] MMI3F-
M13FF+0
[142] CLMMP-
[128] CLMTR-D
[128] EMXTS+
M13FF-0
[142] CLPMP-
[129] CLPTR-
P13FF-0
P13FF+0
[129] EIYLS+
[138] IYBI3+
AID57
CM022
[129] EPYTS+B
[125] CLETR-
[142] CLBMP-
E13FF+0
[138] OTBI3-
[122] SMKO9+
AIB53
CM022
MD
[121] SCI3F-
[125] ECETS+
AIF53
[128] CLXTR-
X13FF+0
Y13FF-A
Y13FF+0
[142] CLPMP-
[129] CLYTR-
Y13FF-0
REVISIONS
REV
S.R. 64-1284
ECO 3767
EXT CHANGES - 1/23/67 RCL
COMPUTER CONTROL COMPANY, INC
FRAMINGHAM MASS LOS ANGELES 64 CALIF
DR. A. KURTZER
DATE 8/4/66
ENG.
APP
PROJECT NO. 55223
TITLE
DDP-516
COLUMN NO. 13
SIZE C
DWG NO 015738
REV.

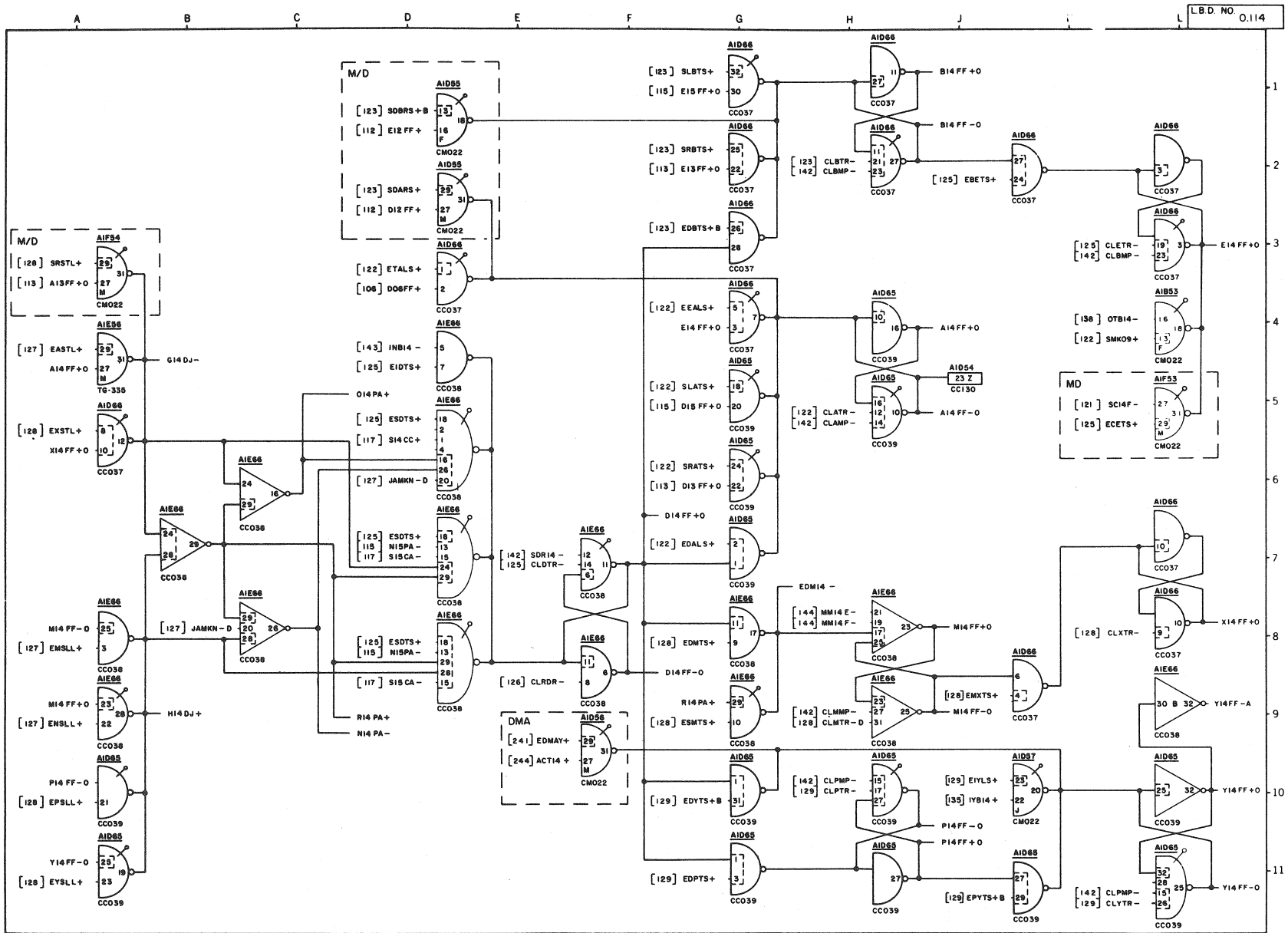
L.B.D. NO. 0.114
M/D
[128] SRSTL+
[113] A13FF+0
AIF54
CMO22
[127] EASTL+
A14FF+0
AIE56
TG-335
G14DJ-
[128] EXSTL+
X14FF+0
AID66
CCO37
M/D
[123] SDBRS+B
[112] E12FF+
AID55
CMO22
[123] SDARS+
[112] D12FF+
[122] ETALS+
[106] DOGFF+
AID66
CCO37
[143] INBI4-
[125] EIDTS+
AIE66
CCO38
O14PA+
[125] ESDTS+
[117] SI4CC+
[127] JAMKN-D
[125] ESDTS+
[115] NI5PA-
[117] SI5CA-
[125] ESDTS+
[115] NI5PA-
[117] SI5CA-
R14PA+
N14PA-
[127] JAMKN-D
M14FF-0
[127] EMSLL+
M14FF+0
[127] ENSLL+
H14DJ+
P14FF-0
[128] EPSLL+
Y14FF-0
[128] EYSLL+
AID65
CCO39
[123] SLBTS+
[115] E15FF+0
[123] SRBTS+
[113] E13FF+0
[123] EDBTS+B
[122] EEALS+
E14FF+0
[122] SLATS+
[115] D15FF+0
[122] SRATS+
[113] D13FF+0
D14FF+0
[122] EDALS+
[128] EDMTS+
D14FF-0
R14PA+
[128] ESMTS+
[129] EDYTS+B
[129] EDPTS+
[142] SDR14-
[125] CLDTR-
[126] CLRDR-
DMA
[241] EDMAY+
[244] ACT14+
AID56
CMO22
EDMI4-
[144] MM14E-
[144] MM14F-
[142] CLMMP-
[128] CLMTR-D
[142] CLPMP-
[129] CLPTR-
[123] CLBTR-
[142] CLBMP-
[122] CLATR-
[142] CLAMP-
B14FF+0
B14FF-0
[125] EBETS+
A14FF+0
A14FF-0
AID54
23Z
CC130
M14FF+0
[128] EMXTS+
M14FF-0
P14FF-0
P14FF+0
[129] EIYLS+
[135] IYBI4+
AID57
CMO22
[129] EPYTS+B
[125] CLETR-
[142] CLBMP-
E14FF+0
[138] OTBI4-
[122] SMKO9+
AIB53
CMO22
MD
[121] SCI4F-
[125] ECETS+
AIF53
CMO22
[128] CLXTR-
X14FF+0
30 B 32
Y14FF-A
Y14FF+0
[142] CLPMP-
[129] CLYTR-
Y14FF-0
REVISIONS
S.R. 64-1264
ECO 3787
EXT CHANGES 1/23/67
RCL 1/27
COMPUTER CONTROL COMPANY, INC.
FRAMINGHAM MASS LOS ANGELES 64 CALIF
DR. A. KURTZER
DATE 8/4/66
PROJECT NO. 55223
TITLE
DDP-516
COLUMN NO. 14
SIZE C
DWG NO. 015739
REV. E

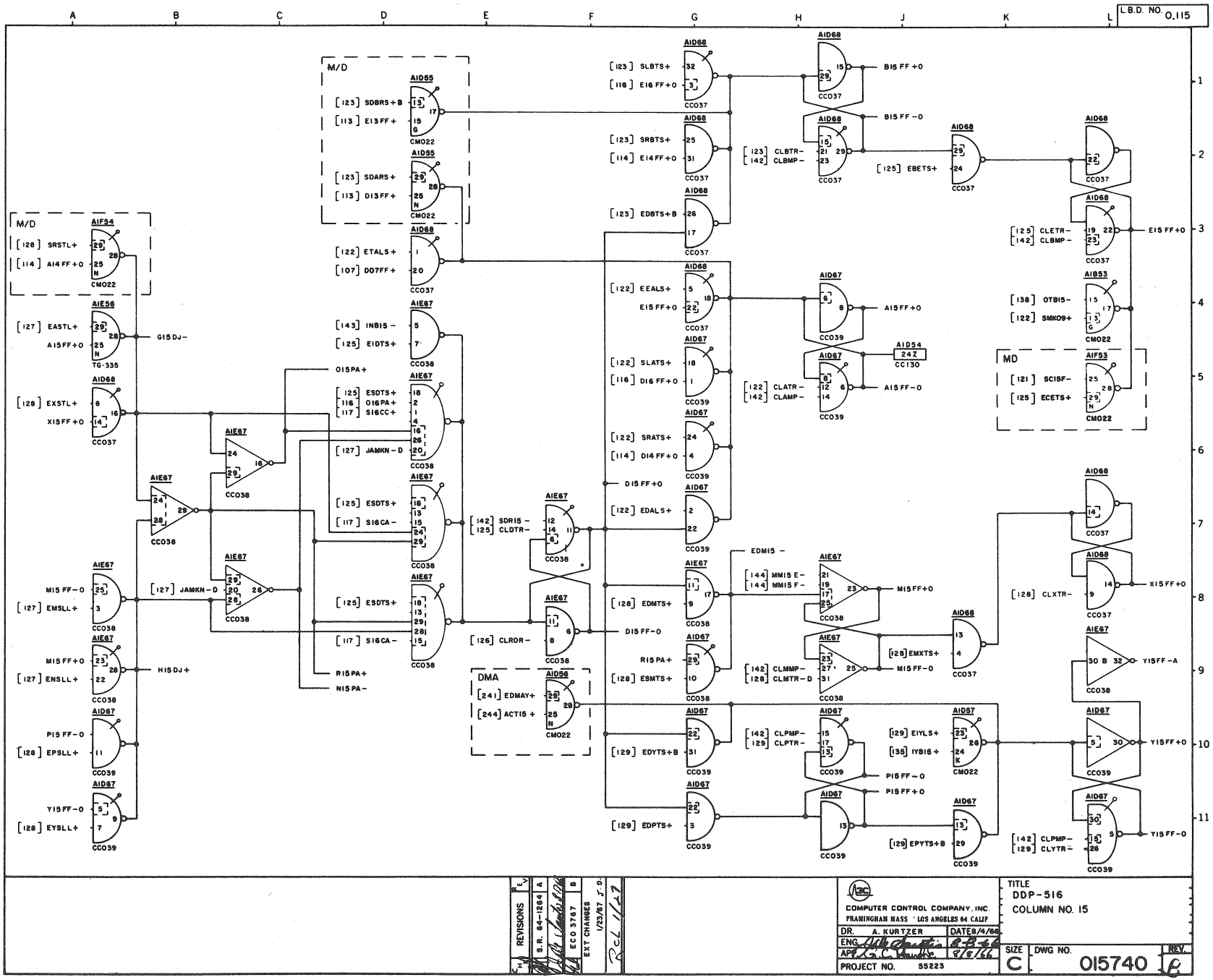
L.B.D. NO. 0,115
M/D
[128] SRSTL+
[114] A14FF+0
AIF54
CMO22
[127] EASTL+
A15FF+0
AIE56
TG-335
G15DJ-
[128] EXSTL+
X15FF+0
AID68
CCO37
M15FF-0
[127] EMSLL+
AIE67
CCO38
H15DJ+
P15FF-0
[128] EPSLL+
AID67
CCO39
Y15FF-0
[128] EYSLL+
[123] SDBRS+B
[113] E13FF+
AID55
CMO22
[123] SDARS+
[113] D13FF+
[122] ETALS+
[107] D07FF+
AID68
CCO37
[143] INB15-
[125] E1DTS+
AIE67
CCO38
O15PA+
[125] ESDTS+
[116] O16PA+
[117] S16CC+
[127] JAMKN-D
[125] ESDTS+
[117] S16CA-
[127] JAMKN-D
[125] ESDTS+
[117] S16CA-
R15PA+
N15PA-
[142] SDR15-
[125] CLDTR-
[126] CLRDR-
DMA
[241] EDMAY+
[244] ACTIS+
AID56
CMO22
[123] SLBTS+
[116] E16FF+0
[123] SRBTS+
[114] E14FF+0
[123] EDBTS+B
[122] EEALS+
E15FF+0
[122] SLATS+
[116] D16FF+0
[122] SRATS+
[114] D14FF+0
D15FF+0
[122] EDALS+
EDMI5-
[128] EDMTS+
D15FF-0
R15PA+
[128] ESMTS+
[129] EDYTS+B
[129] EDPTS+
[123] CLBTR-
[142] CLBMP-
[122] CLATR-
[142] CLAMP-
[144] MMI5 E-
[144] MMI5 F-
[142] CLMMP-
[128] CLMTR-D
[142] CLPMP-
[129] CLPTR-
B15FF+0
B15FF-0
[125] EBETS+
A15FF+0
A15FF-0
AID54
24Z
CC130
M15FF+0
[126] EMXTS+
M15FF-0
P15FF-0
P15FF+0
[129] EIYLS+
[136] IY816+
[129] EPYTS+B
MD
[121] SC15F-
[125] ECETS+
AIF53
[125] CLETR-
[142] CLBMP-
E15FF+0
[138] OTB15-
[122] SMKO9+
[128] CLXTR-
X15FF+0
Y15FF-A
Y15FF+0
[142] CLPMP-
[129] CLYTR-
Y15FF-0
REVISIONS
REV
A
S.R. 64-1264
B
ECO 3787
EXT CHANGES
1/23/67 J.D.
COMPUTER CONTROL COMPANY, INC.
FRAMINGHAM MASS / LOS ANGELES 64 CALIF
DR. A. KURTZER
DATE 8/4/66
ENG.
APP.
PROJECT NO. 55223
TITLE
DDP-516
COLUMN NO. 15
SIZE C
DWG NO. 015740
REV. B

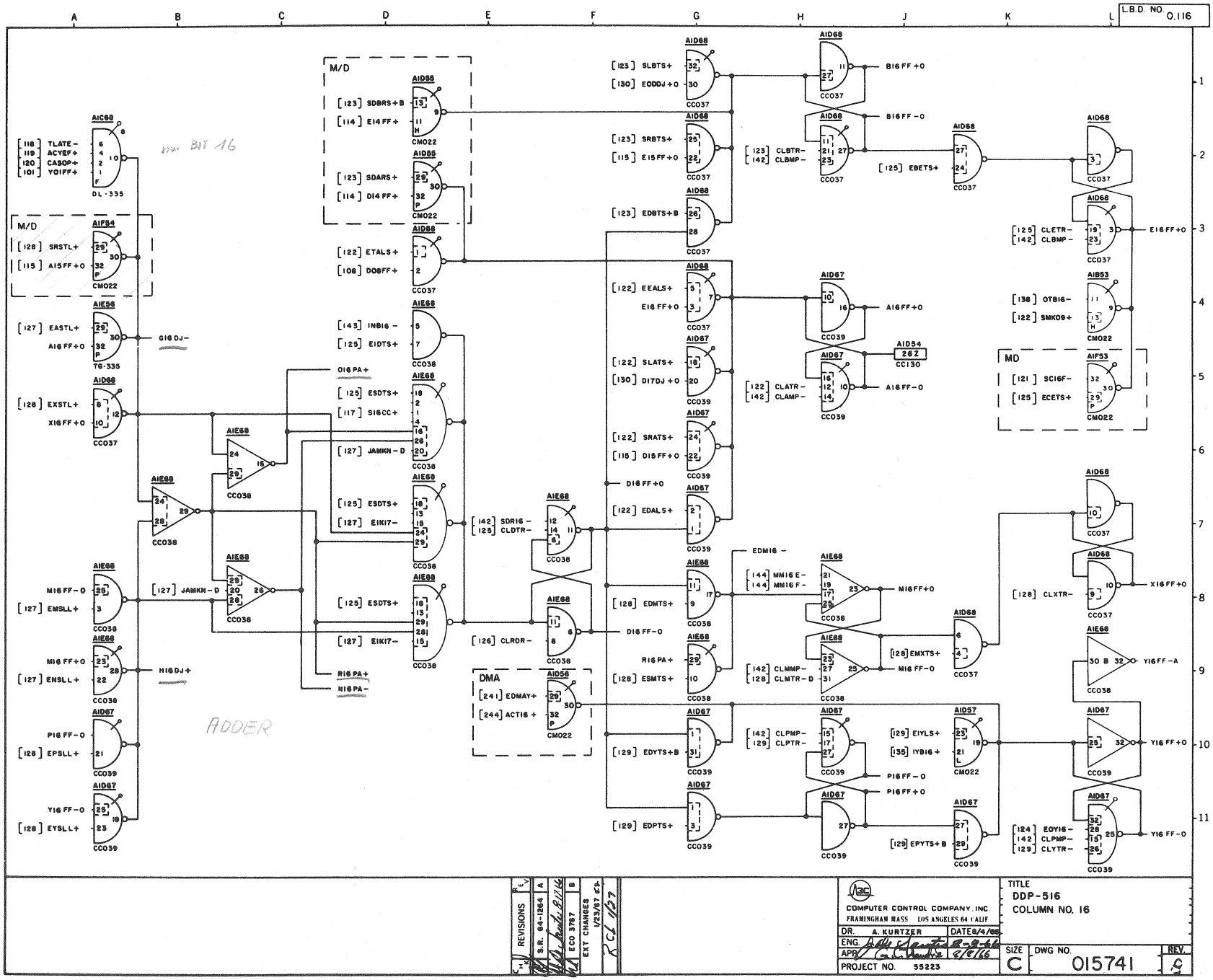
L.B.D. NO. 0.116
M/D
[123] SDBRS+B
[114] E14FF+
[123] SDARS+
[114] D14FF+
CMO22
[122] ETALS+
[108] DO8FF+
[118] TLATE-
[119] ACYEF+
[120] CASOP+
[101] YOIFF+
DL-335
[128] SRSTL+
[115] A15FF+0
[127] EASTL+
A16FF+0
TG-335
G16DJ-
[128] EXSTL+
X16FF+0
[143] INB16-
[125] EIDTS+
CCO38
O16PA+
[125] ESDTS+
[117] S16CC+
[127] JAMKN-D
[127] EIKI7-
[142] SDR16-
[125] CLDTR-
[126] CLRDR-
DMA
[241] EDMAY+
[244] ACT16+
CMO22
R16PA+
N16PA-
M16FF-0
[127] EMSLL+
M16FF+0
[127] ENSLL+
H16DJ+
P16FF-0
[128] EPSLL+
Y16FF-0
[128] EYSLL+
CCO39
ADDER
[123] SLBTS+
[130] EODDJ+0
[123] SRBTS+
[115] E15FF+0
[123] EDBTS+B
[122] EEALS+
E16FF+0
[122] SLATS+
[130] D17DJ+0
[122] SRATS+
[115] D15FF+0
D16FF+0
[122] EDALS+
[128] EDMTS+
D16FF-0
R16PA+
[128] ESMTS+
[129] EDYTS+B
[129] EDPTS+
EDM16-
[144] MM16E-
[144] MM16F-
M16FF+0
[142] CLMMP-
[128] CLMTR-D
[128] EMXTS+
M16FF-0
[142] CLPMP-
[129] CLPTR-
P16FF-0
P16FF+0
[129] EIYLS+
[135] IYB16+
[129] EPYTS+B
B16FF+0
B16FF-0
[123] CLBTR-
[142] CLBMP-
[125] EBETS+
AID54
26Z
CC130
A16FF+0
[122] CLATR-
[142] CLAMP-
A16FF-0
[125] CLETR-
[142] CLBMP-
E16FF+0
[138] OTB16-
[122] SMK09+
MD
[121] SC16F-
[125] ECETS+
[128] CLXTR-
X16FF+0
30 B 32
Y16FF-A
Y16FF+0
[124] EOY16-
[142] CLPMP-
[129] CLYTR-
Y16FF-0
REVISIONS
S.R. 84-1264
ECO 3787
EXT CHANGES 1/23/67 EK
RCL 1137
COMPUTER CONTROL COMPANY, INC
FRAMINGHAM MASS LOS ANGELES 64 CALIF
DR. A. KURTZER
DATE 6/4/66
ENG.
APP.
PROJECT NO. 55223
TITLE
DDP-516
COLUMN NO. 16
SIZE C
DWG NO. 015741
REV. C

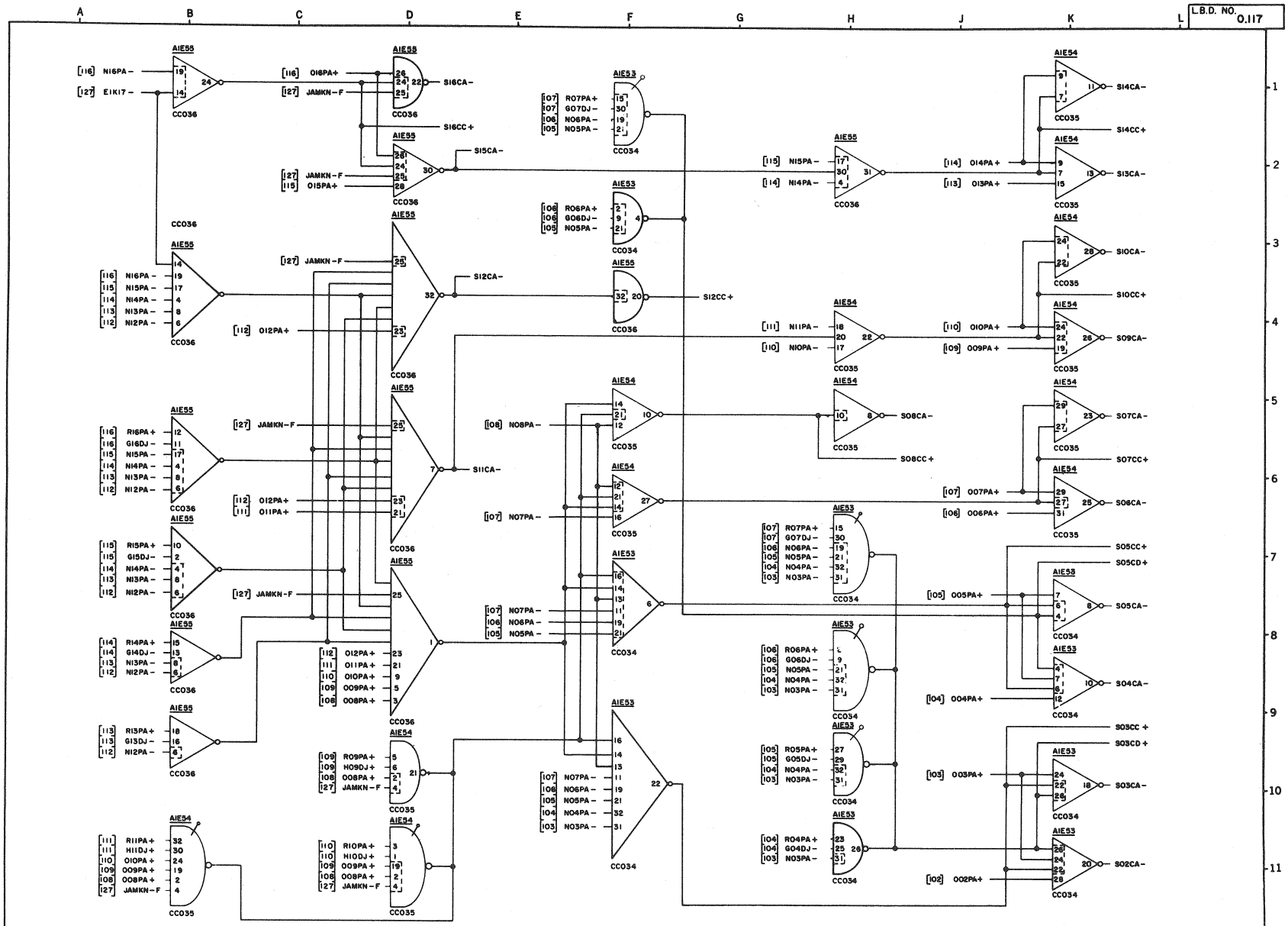

REVISIONS	REV.	DR.	DATE
S.R. 64-1264	A		

COMPUTER CONTROL COMPANY, INC.
FRAMINGHAM MASS / LOS ANGELES 64 CALIF

DR. A. KURTZER	DATE 8/4/66	TITLE	
ENG.		DDP-516	
APP.		ADDER CARRY NET	
PROJECT NO. 55223		SIZE C	DWG NO. 015742 REV. A

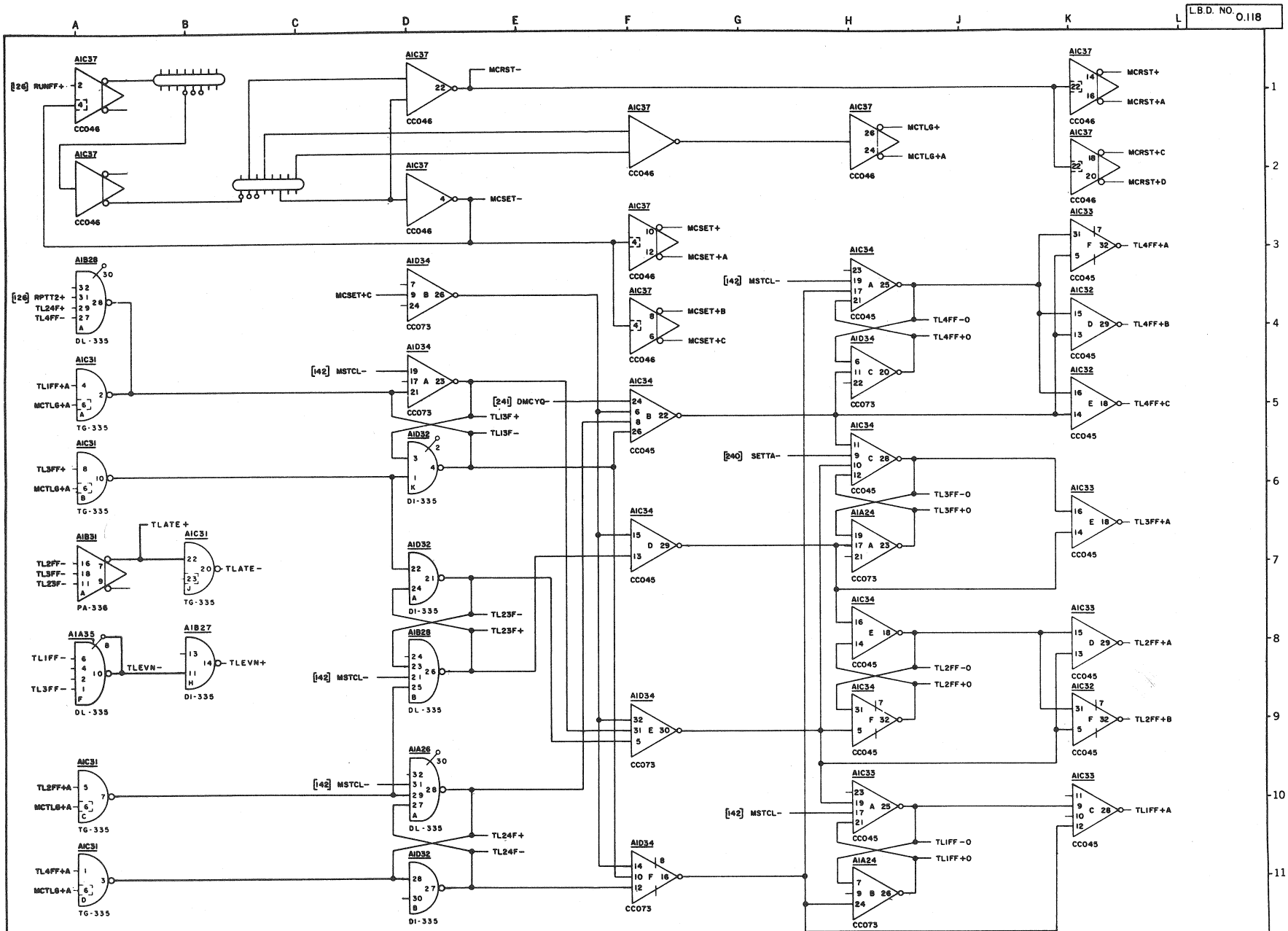

REV	REVISIONS	CHK
A	S.R. 64-1264	
B	ECO 4464	
	EXT. CHANGES SEE ECO 8/2/67	

COMPUTER CONTROL COMPANY, INC.
FRAMINGHAM, MASS. / LOS ANGELES 64, CALIF

DR.	A. KURTZER	DATE 8/4/66
ENG.		8-8-66
APP.		8/9/66
PROJECT NO.	55223	

TITLE
DDP-516
TLG & CLOCK

SIZE	DWG NO.	REV.
C	015743	6

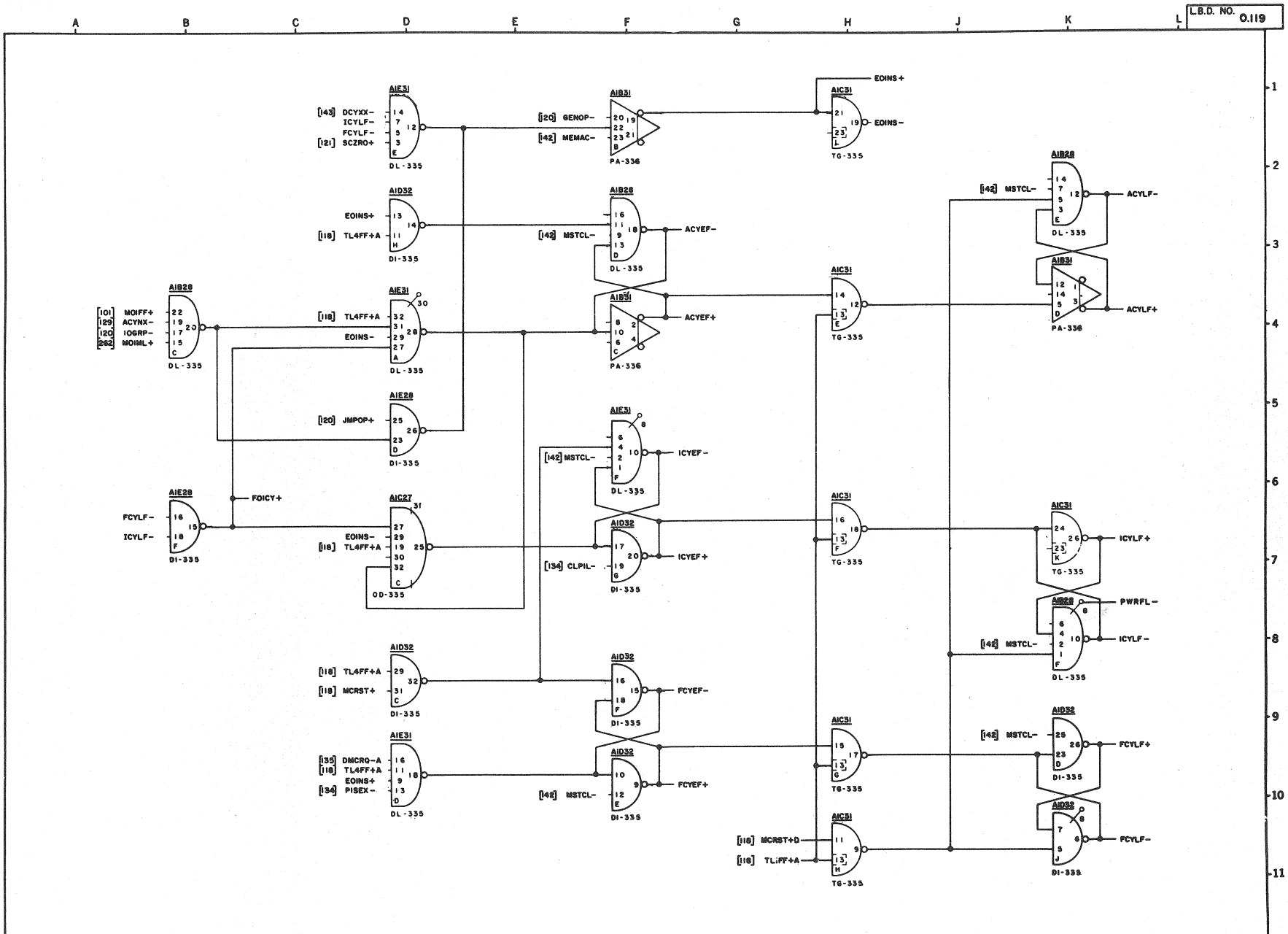

REVISIONS		
S.R. 64-1264	A	
ECO 4763	B	
NO CHGS SEE ECO		
ECO 5641	C	
EXT. CHANGES SEE ECO 3/19/68	A.X.	

COMPUTER CONTROL COMPANY, INC.
FRAMINGHAM, MASS. / LOS ANGELES 64, CALIF.

DR.	A. KURTZER	DATE 8/4/66
ENG.		
APP.		8/8/66
PROJECT NO.	55223	

TITLE
DDP-516
PHASE REGISTER

SIZE	DWG NO.	REV.
C	015744	C

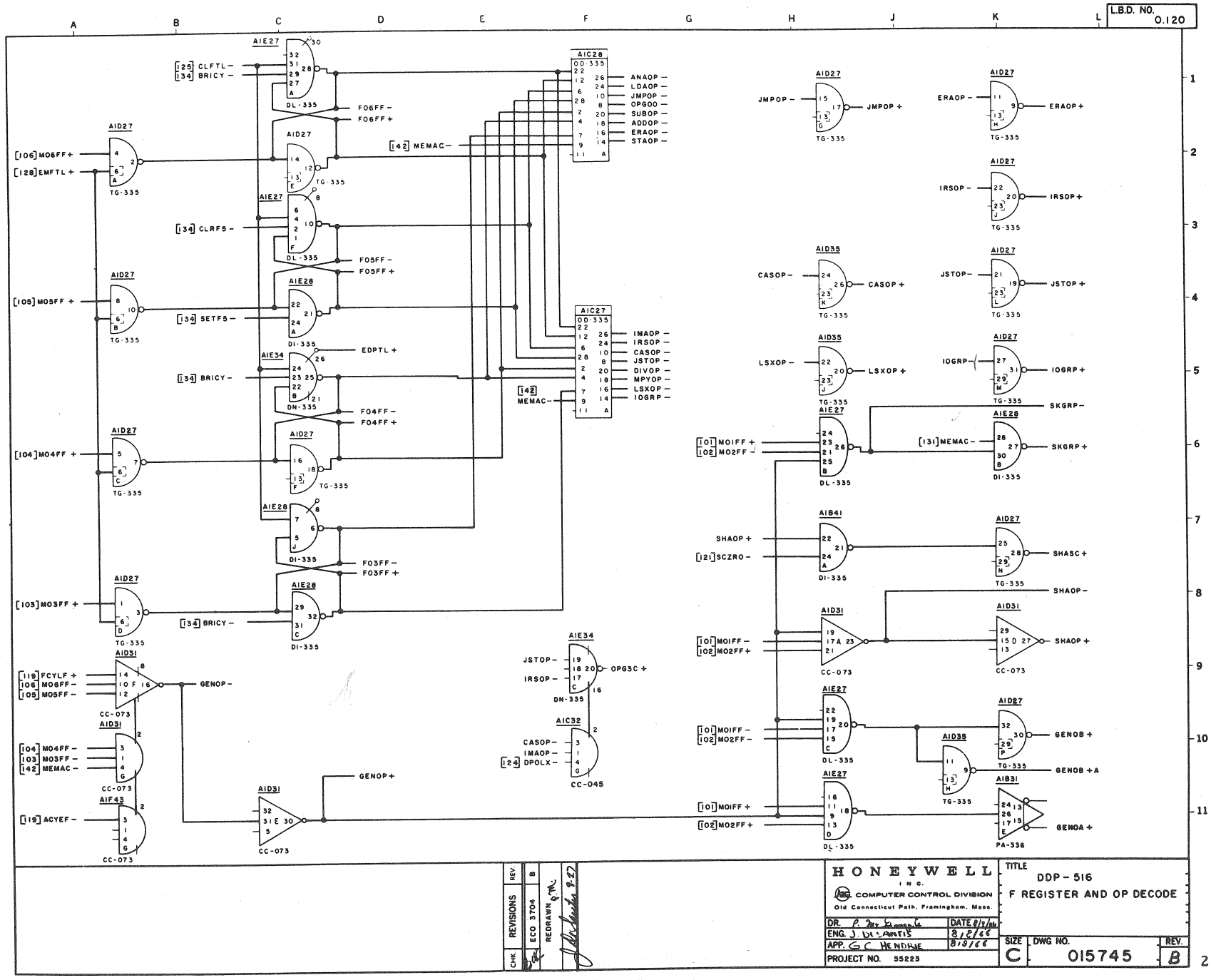
L.B.D. NO. 0.120
[25] CLFTL –
[34] BRICY –
[106] MO6FF +
[128] EMFTL +
[105] MO5FF +
[34] CLRF5 –
[34] SETF5 –
[104] MO4FF +
[34] BRICY –
[103] MO3FF +
[34] BRICY –
[42] MEMAC –
[42] MEMAC –
[118] FCYLF +
[106] MO6FF –
[105] MO5FF –
[104] MO4FF –
[103] MO3FF –
[142] MEMAC –
[19] ACYEF –
[124] DPOLX –
ANAOP –
LDAOP –
JMPOP –
OPGOO –
SUBOP –
ADDOP –
ERAOP –
STAOP –
IMAOP –
IRSOP –
CASOP –
JSTOP –
DIVOP –
MPYOP –
LSXOP –
IOGRP –
EDPTL +
F06FF –
F06FF +
F05FF –
F05FF +
F04FF –
F04FF +
F03FF –
F03FF +
GENOP –
GENOP +
OPG3C +
JMPOP –
JMPOP +
ERAOP –
ERAOP +
IRSOP –
IRSOP +
CASOP –
CASOP +
JSTOP –
JSTOP +
LSXOP –
LSXOP +
IOGRP –
IOGRP +
SKGRP –
SKGRP +
[101] MOIFF +
[102] MO2FF –
[131] MEMAC –
SHAOP +
[121] SCZRO –
SHASC +
SHAOP –
SHAOP +
[101] MOIFF –
[102] MO2FF +
[101] MOIFF –
[102] MO2FF –
GENOB +
GENOB +A
[101] MOIFF +
[102] MO2FF +
GENOA +
AIE27
AIE28
AIE34
AIC28
AIC27
AIC32
AID27
AID35
AIB41
AID31
AIE34
AIC32
AIF43
AIB31
DL-335
DI-335
DN-335
TG-335
CC-073
CC-045
PA-336
REVISIONS
REV
CHK
ECO 3704
B
REDRAWN
HONEYWELL INC.
COMPUTER CONTROL DIVISION
Old Connecticut Path, Framingham, Mass.
DR. P. Mac Kenzie G.
ENG. J. DeSantis
APP. G.C. HENDRIE
PROJECT NO. 55223
DATE 8/17/66
8/8/66
8/9/66
TITLE
DDP-516
F REGISTER AND OP DECODE
SIZE C
DWG NO. 015745
REV. B

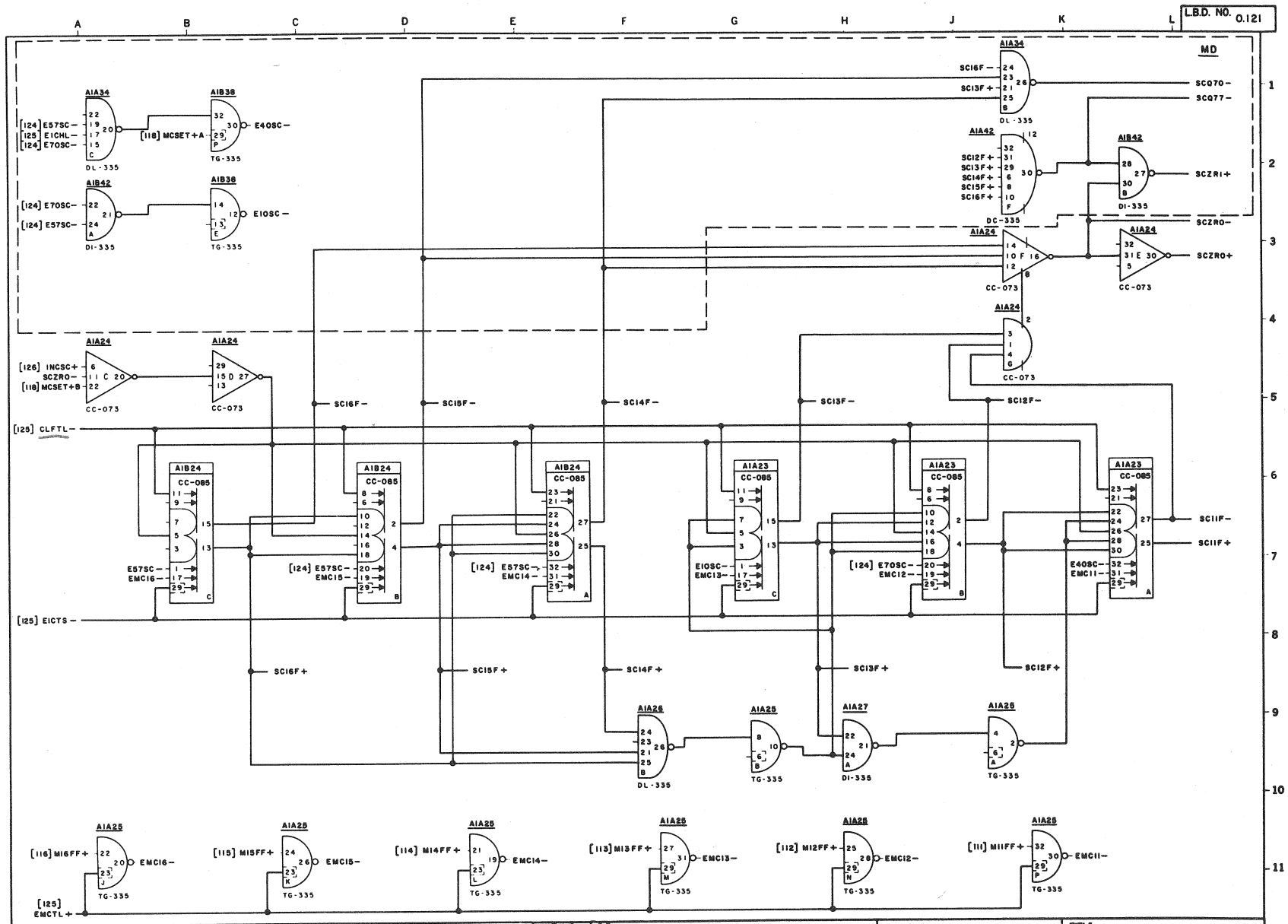

REV.	REVISIONS	CHK.
B	ECO 3704	
	REDRAWN A.K.	

HONEYWELL INC.
COMPUTER CONTROL DIVISION
Old Connecticut Path, Framingham, Mass.

DR.	A. Kuster	DATE 8/4/66
ENG.	J. DeSANTIS	8/8/66
APP.	G. C. HENDRIE	8/10/66
PROJECT NO.	55223	

TITLE
DDP-516
SHIFT COUNTER

SIZE	DWG NO.	REV.
C	015746	B

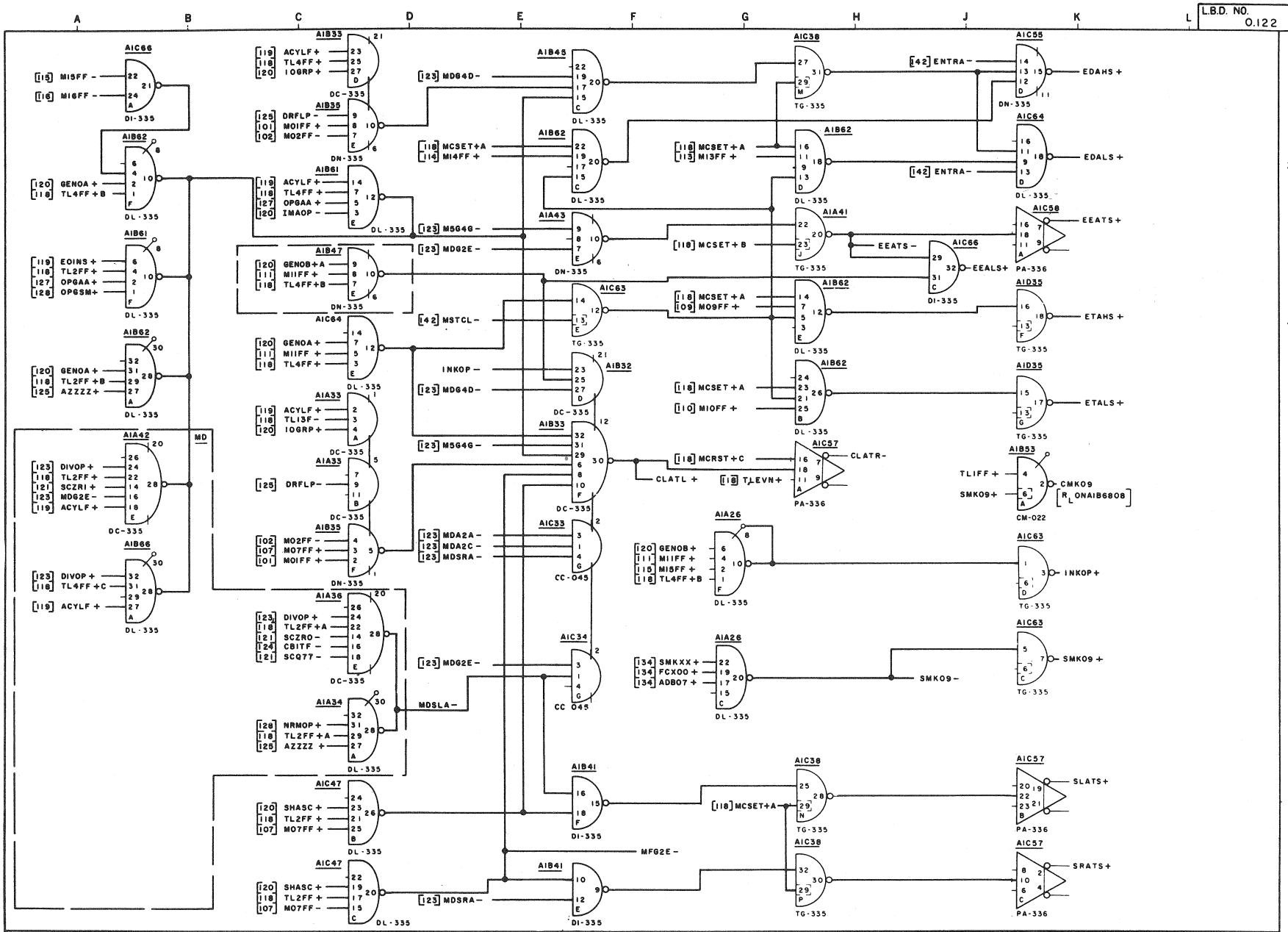

REV.	REVISIONS	CHK.
B	ECO 3704	K
	RECRAWN A.K.	
C	ECO 4464	
	EXT. CHANGES SEE ECO 8/2/67	
D	ECO 4763	
	EXT. CHNG. SEE ECO 4-15-68 D.M.H.	

HONEYWELL INC.
COMPUTER CONTROL DIVISION
Old Connecticut Path, Framingham, Mass.

DR.	A. Kontzer	DATE 8/4/66
ENG.	J.C.E. SANTIS	8/8/66
APP.	G.C. HENDRIE	8/8/66
PROJECT NO.	55223	

TITLE
DDP-516
CONTROL LOGIC A

SIZE	DWG NO.	REV.
C	015747	D

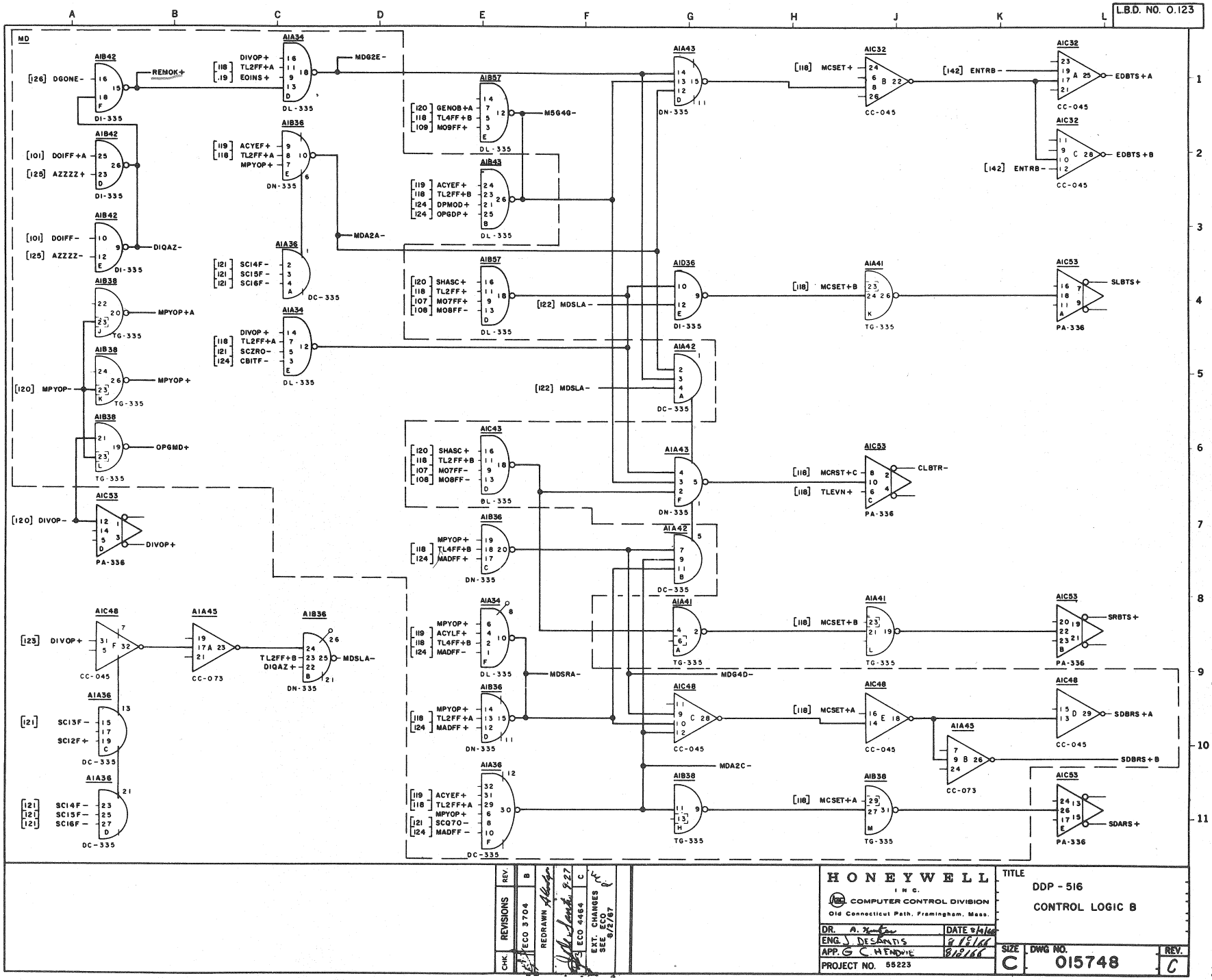

REVISIONS	REV.	CHK.
ECO 3704	B	
REDRAWN ECO 4464	C	
EXT. CHANGES SEE ECO 8/2/67		

HONEYWELL INC.
COMPUTER CONTROL DIVISION
Old Connecticut Path, Framingham, Mass.

DR. A.	DATE 8/4/66
ENG. J. DESANTIS	8/15/66
APP. G. C. HENDRIE	8/19/66
PROJECT NO. 55223	

TITLE
DDP-516
CONTROL LOGIC B

SIZE C | DWG NO. 015748 | REV. C

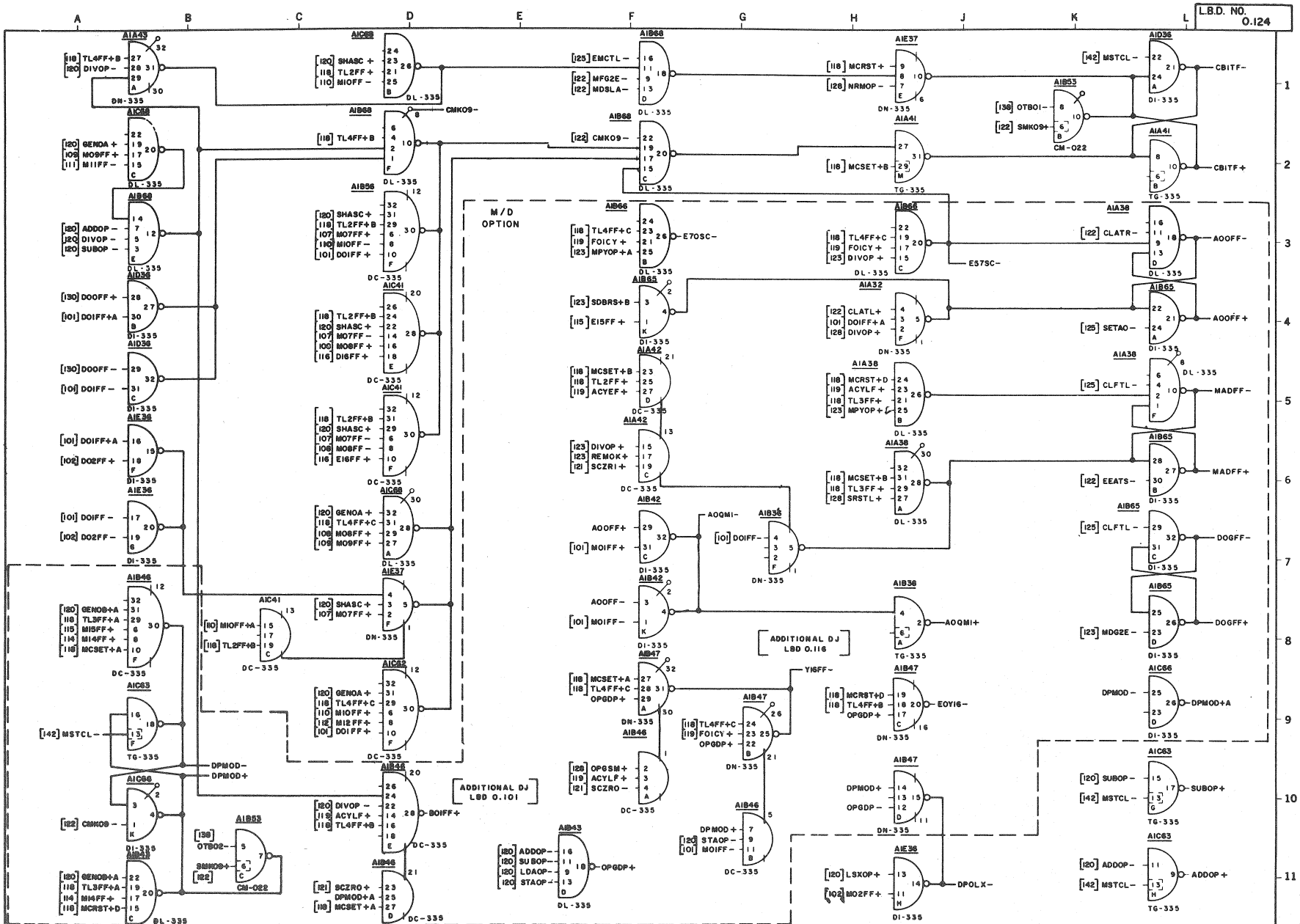

REVISIONS	REV	CHK.
ECO 3704 RELDRAWN A	B	
ECO 4464 EXT. CHANGES SEE ECO 8/2/67	C	
ECO 5906 EXT. CHANGES SEE ECO 6/14/68	D	

HONEYWELL INC.
COMPUTER CONTROL DIVISION
Old Connecticut Path, Framingham, Mass.

DR.	DATE 9/4
ENG. J. DE SANTIS	8/8/66
APP. G.C. HENDRIE	8/8/66
PROJECT NO. 55223	

TITLE
CONTROL LOGIC C
DDP-516

SIZE C | DWG NO. 015749 | REV. D

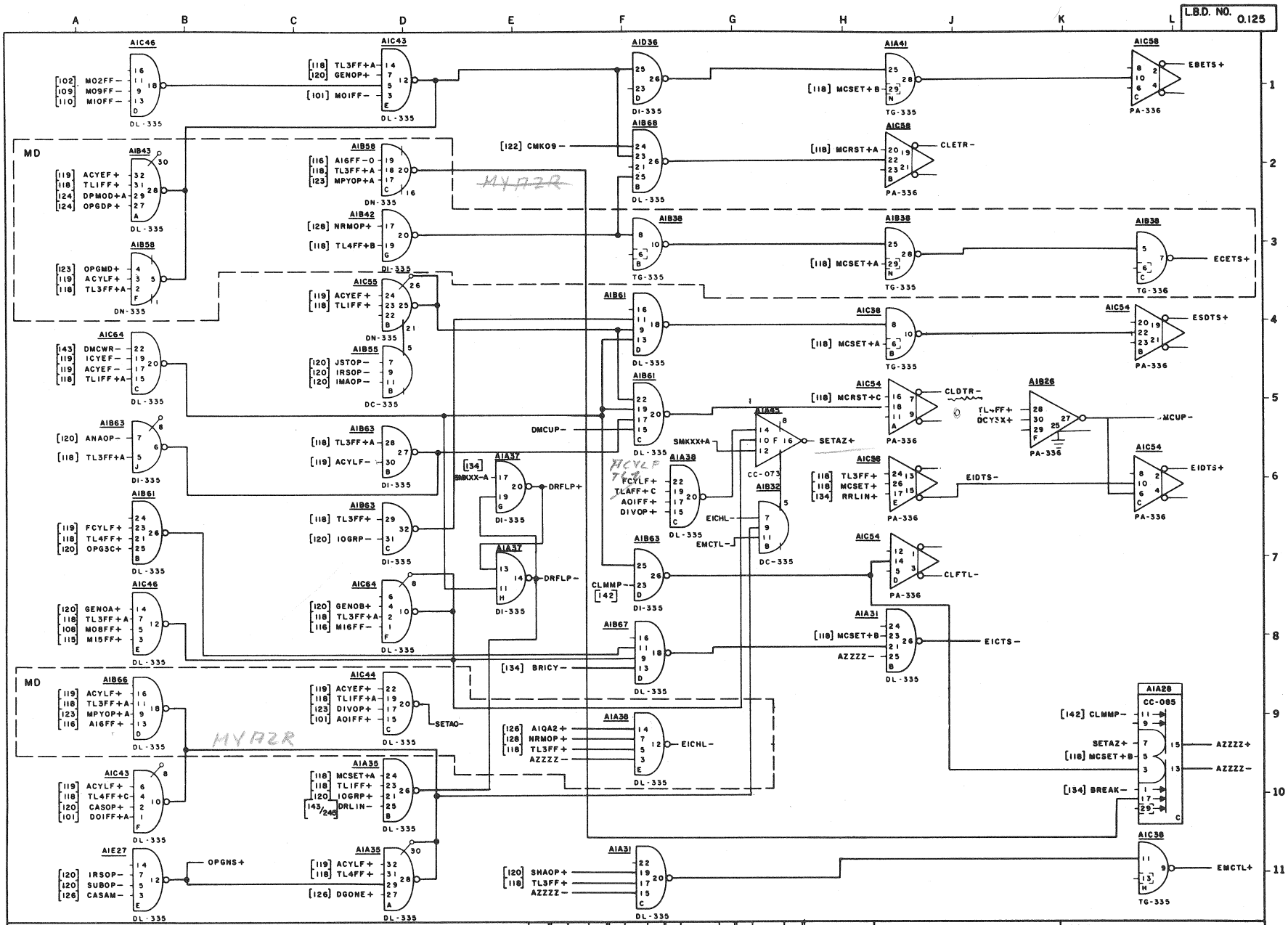

REV.	REVISIONS	GHK.
B	ECO 3704	K
	REDRAWN A.K.	
C	ECO 3767	
	EXT CHANGES 1/23/67	
D	ECO 4464	
	EXT CHANGES SEE ECO 8/2/67	
E	ECO 5906	
	EXT. CHANGES SEE ECO 6/14/68	

HONEYWELL INC.
COMPUTER CONTROL DIVISION
Old Connecticut Path, Framingham, Mass.

DR. A. KURTZER	DATE 8/8/66
ENG. J. DESANTIS	8/8/66
APP. G.C. HENDRIE	8/8/66
PROJECT NO. 55223	

TITLE
DDP-516
CONTROL LOGIC DE

SIZE	DWG NO.	REV.
C	015750	E

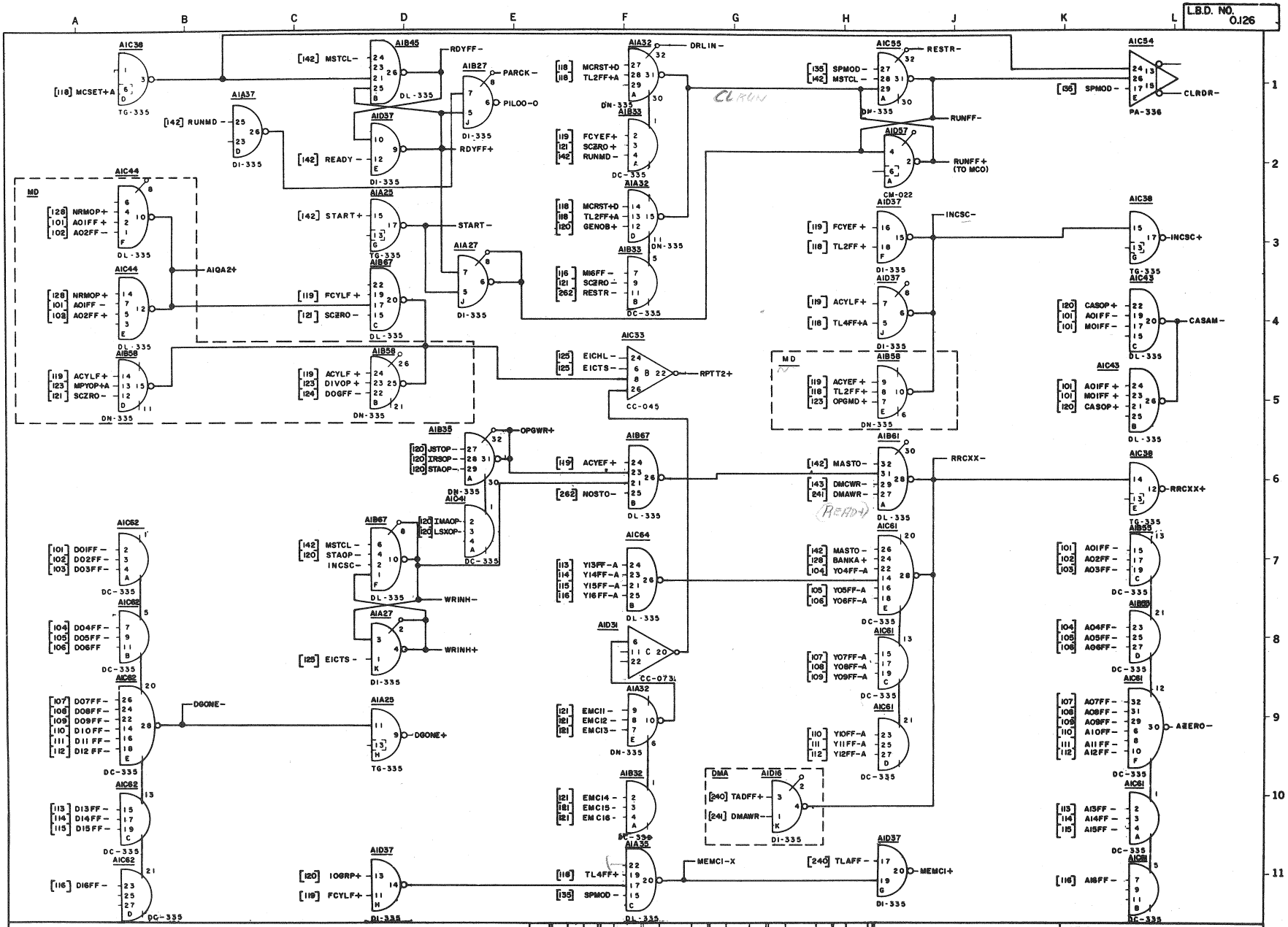

REV.	REVISIONS	CHK.
H	ECO 6194 EXT CHNG SEE ECO 10/23/66 D.B.	

HONEYWELL INC.
COMPUTER CONTROL DIVISION
Old Connecticut Path, Framingham, Mass.

DR. A. KURTZER	DATE 8/4/66	
ENG. J. DESANTIS	8/8/66	
APP. G C HENDRIE	8/8/66	
PROJECT NO. 55223		

TITLE
DDP-516
CONTROL LOGIC H

SIZE	DWG NO.	REV.
C	015751	H

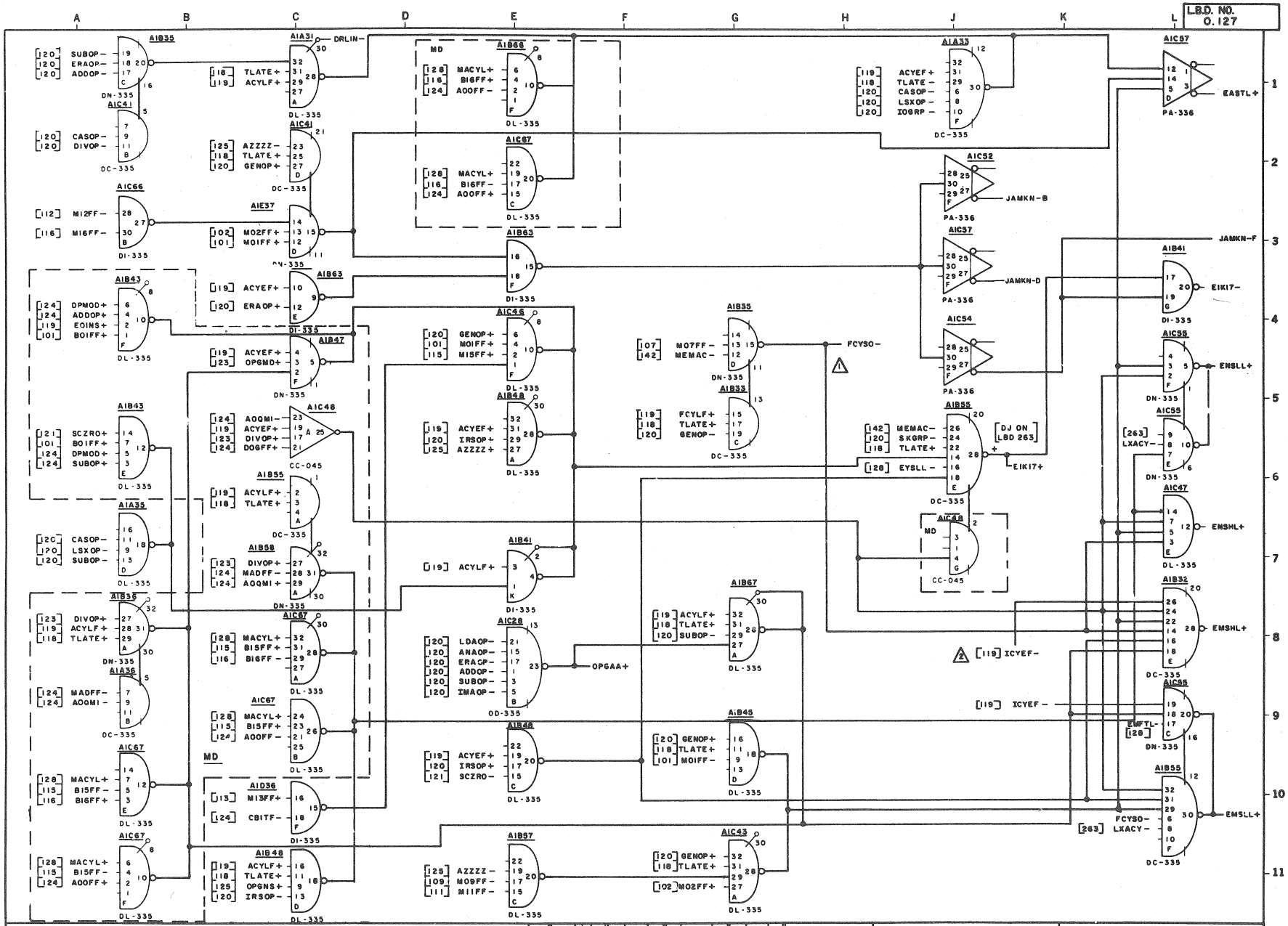

△1 IF MEMORY LOCKOUT OPTION (516-08) IS INSTALLED, DELETE FCYSO- FROM A1B3214 & A1C4703

△2 IF MEMORY LOCKOUT OPTION (516-08) IS INSTALLED, SIGNAL ICYEF-0 IS REPLACED BY ICYSI-0 FROM LBD 263 IN THE MEMORY LOCKOUT OPTION

REV.	REVISIONS	CHK.
B	ECO 3704	
C	ECO 3767	
D	ECO 4464	
E	ECO 4763	

REDRAWN

EXT CHANGES 1/23/67

EXT CHANGES SEE ECO 8/2/67

EXT. CHNG. SEE ECO 12-4-68 DMH

HONEYWELL INC.
COMPUTER CONTROL DIVISION
Old Connecticut Path, Framingham, Mass.

DR.	A. KURTZER	DATE 8/4/66
ENG.	J. DESANTIS	8/8/66
APP.	G.C. HENDRIE	8/8/66
PROJECT NO. 55223		

TITLE
DDP-516
CONTROL LOGICS

SIZE C | DWG NO. 015752 | REV. E

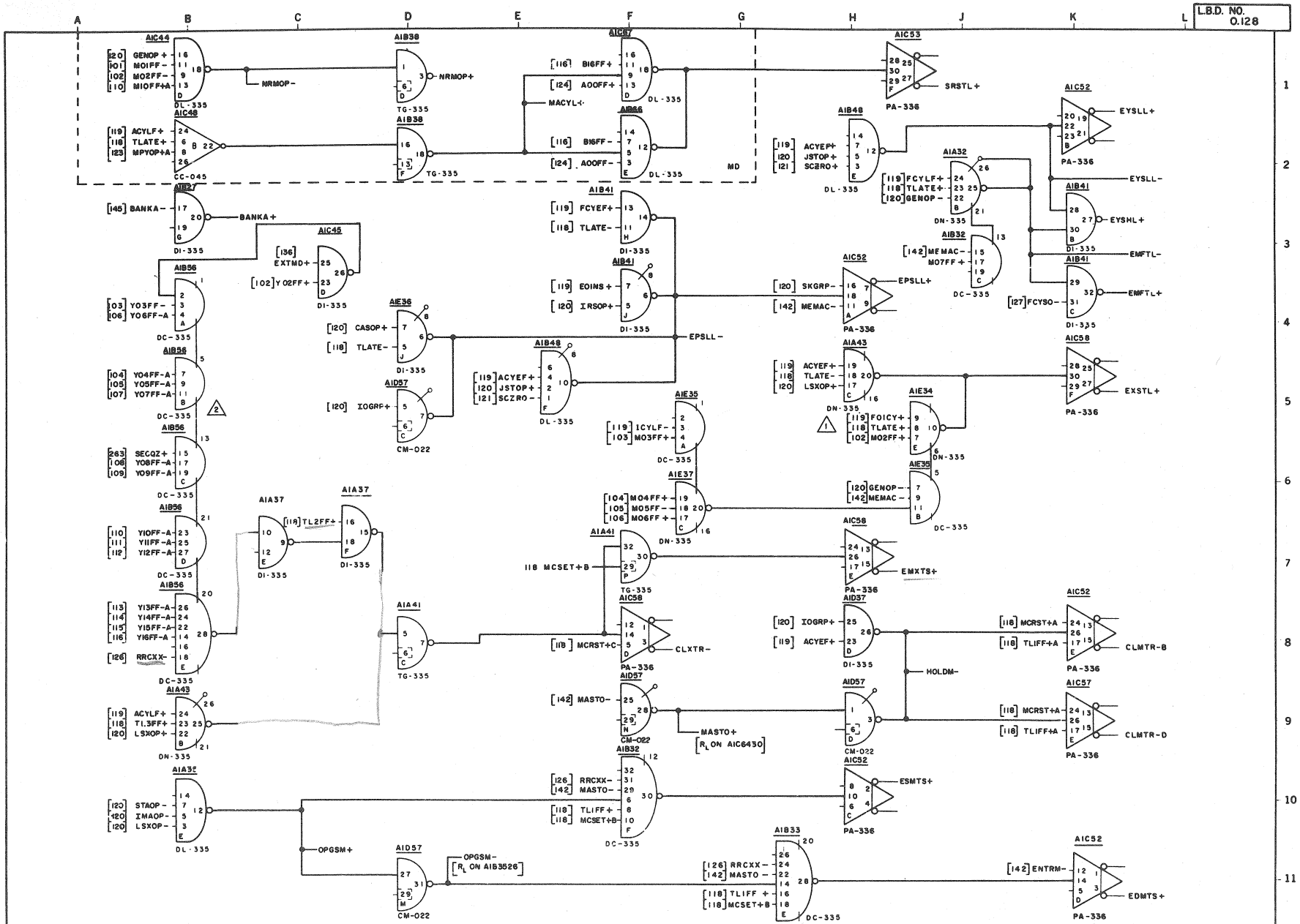

1. REPLACE MO2FF+ WITH MO2DJ+ WHEN EXTENDED ADDRESSING IS INSTALLED.
2. DISCONNECT THIS WIRE IF THE MEMORY LOCKOUT OPTION (516-08) IS INSTALLED.

REV.	REVISIONS	CHK.
B	ECO 3704 REDRAWN	
C	ECO 4131 EXT CHG	
D	ECO 4763 EXT CHNG 4/12/68	LS

HONEYWELL INC.
COMPUTER CONTROL DIVISION
Old Connecticut Path, Framingham, Mass.

DR.		DATE 8/8/66
ENG.		8/8/66
APP.	G E HENDRIE	8/8/66
PROJECT NO	55223	

TITLE
DDP-516
CONTROL LOGIC MX

SIZE	DWG NO.	REV.
C	015753	D

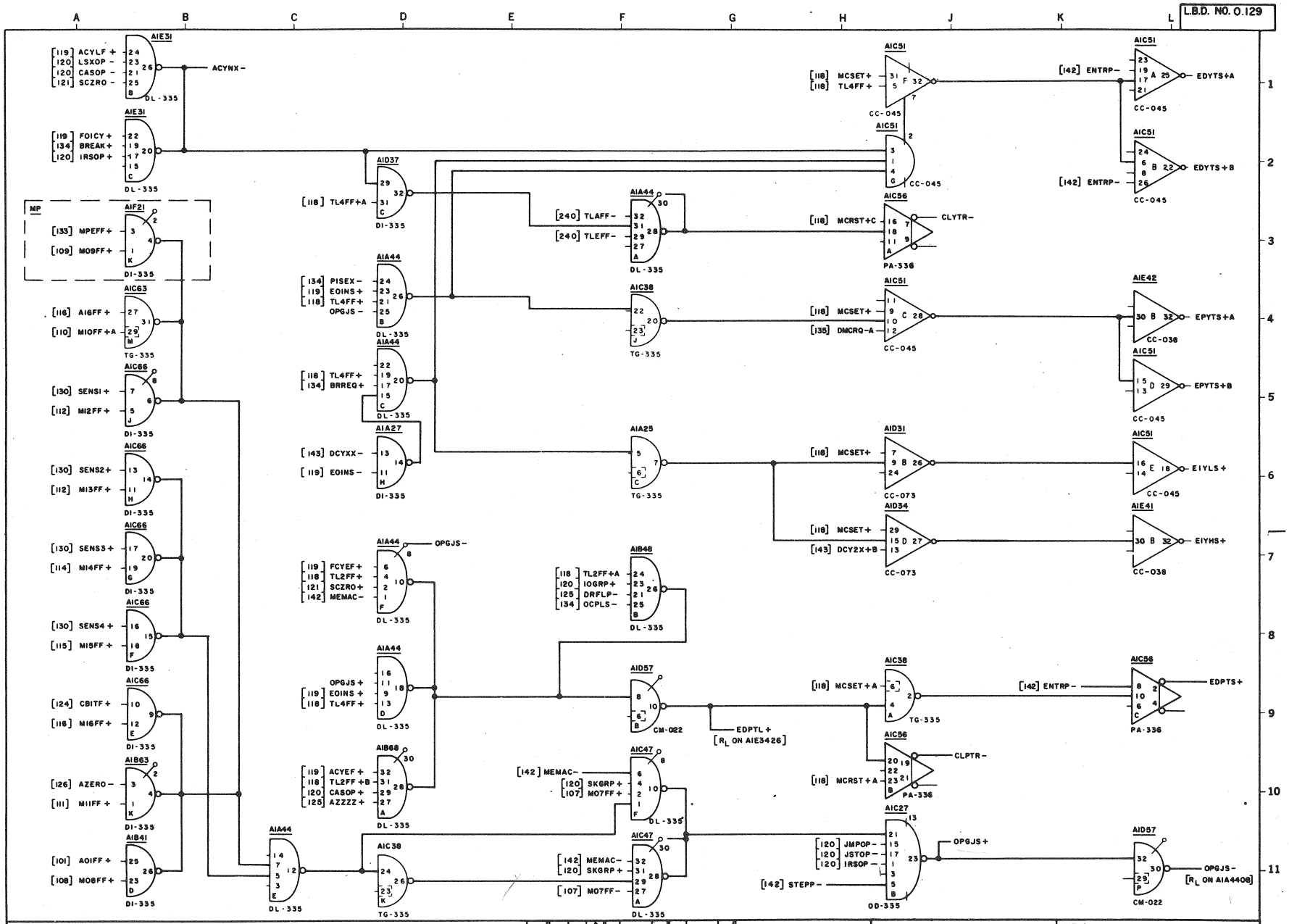
L.B.D. NO. 0.129
A
B
C
D
E
F
G
H
J
K
L
AIE31
[119] ACYLF +
[120] LSXOP −
[120] CASOP −
[121] SCZRO −
ACYNX −
DL-335
[119] FOICY +
[134] BREAK +
[120] IRSOP +
MP
AIF21
[133] MPEFF +
[109] MO9FF +
DI-335
AIC63
[116] AI6FF +
[110] MIOFF +A
TG-335
AIC66
[130] SENSI +
[112] MI2FF +
[130] SENS2 +
[112] MI3FF +
[130] SENS3 +
[114] MI4FF +
[130] SENS4 +
[115] MI5FF +
[124] CBITF +
[116] MI6FF +
AIB63
[126] AZERO −
[111] MIIFF +
AIB41
[101] AOIFF +
[108] MO8FF +
AIA44
AID37
[118] TL4FF+A
DI-335
[134] PISEX −
[119] EOINS +
[118] TL4FF +
OPGJS −
[118] TL4FF +
[134] BRREQ +
AIA27
[143] DCYXX −
[119] EOINS −
[119] FCYEF +
[118] TL2FF +
[121] SCZRO +
[142] MEMAC −
OPGJS −
[119] OPGJS +
[119] EOINS +
[118] TL4FF +
[119] ACYEF +
[118] TL2FF +B
[120] CASOP +
[125] AZZZZ +
AIB68
AIC38
[240] TLAFF −
[240] TLEFF −
AIA44
AIA25
AIB48
[118] TL2FF+A
[120] IOGRP +
[125] DRFLP −
[134] OCPLS −
AID57
EDPTL +
[R_L ON AIE3426]
[142] MEMAC −
[120] SKGRP +
[107] MO7FF +
AIC47
[142] MEMAC −
[120] SKGRP +
[107] MO7FF −
[142] STEPP −
[120] JMPOP −
[120] JSTOP −
[120] IRSOP −
AIC27
OPGJS +
OD-335
AIC51
[118] MCSET +
[118] TL4FF +
CC-045
[142] ENTRP −
EDYTS+A
EDYTS+B
[118] MCRST+C
CLYTR −
PA-336
[118] MCSET +
[135] DMCRQ-A
AIE42
EPYTS+A
CC-038
EPYTS+B
AID31
EIYLS +
AID34
[143] DCY2X+B
EIYHS +
AIE41
AIC38
[118] MCSET+A
TG-335
EDPTS +
AIC56
[118] MCRST+A
CLPTR −
[142] ENTRP −
PA-336
AID57
OPGJS −
[R_L ON AIA4408]
CM-022
REVISIONS
REV.
CHK.
ECO 3704
B
REDRAWN A.K.
ECO 4464
C
EXT CHANGES SEE ECO 8/2/67
ECO 5908
D
EXT. CHANGES SEE ECO 6/14/68
HONEYWELL
INC.
COMPUTER CONTROL DIVISION
Old Connecticut Path, Framingham, Mass.
DR. A. KURTZER
DATE 8/8/66
ENG. J. DESANTIS
8/8/66
APP. G. C. HENDRIE
8/8/66
PROJECT NO. 55223
TITLE
DDP-516
CONTROL LOGIC PY
SIZE C
DWG NO. 015754
REV. D

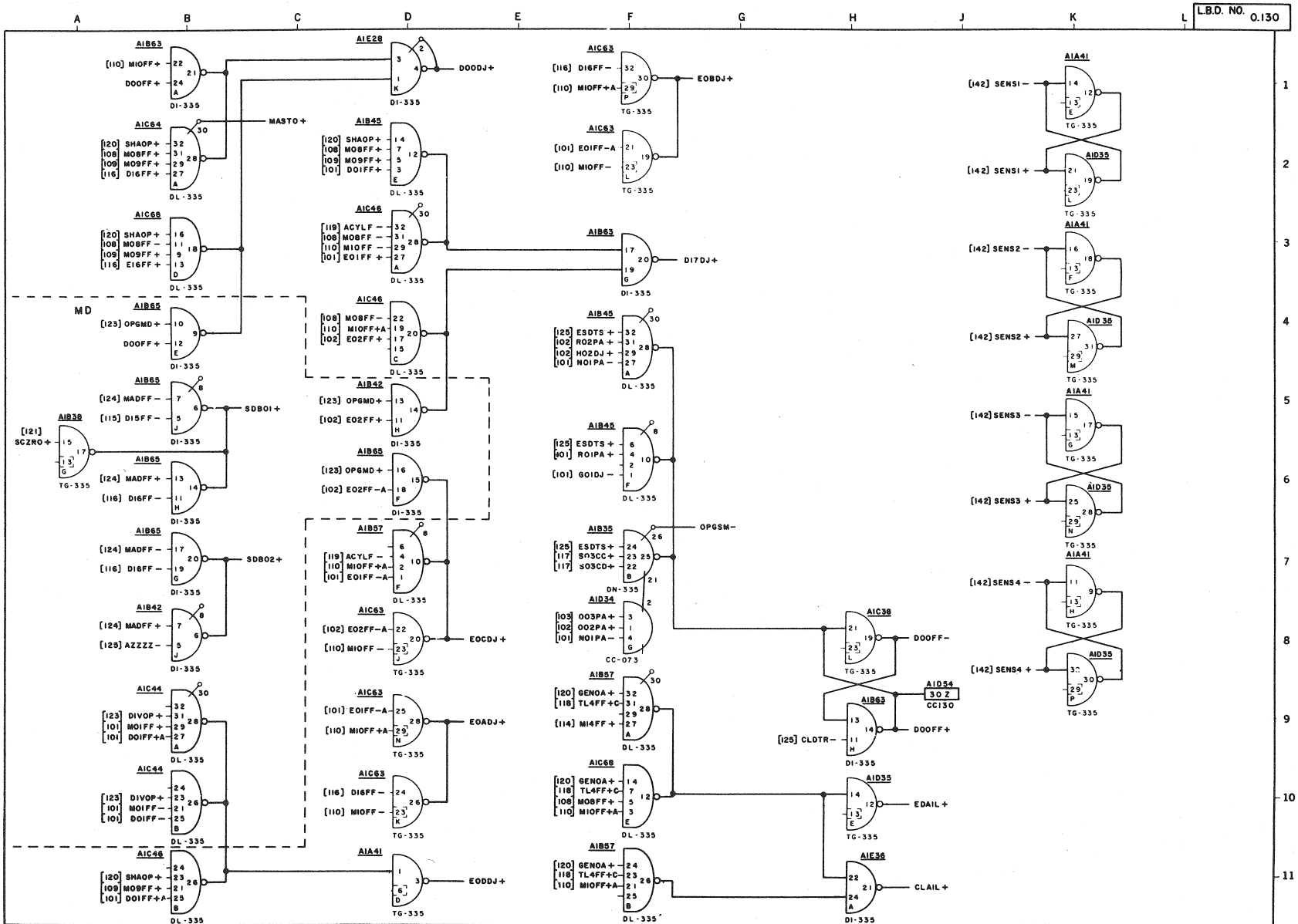

REVISIONS	REV.	CHK.
ECO 3704 REDRAWN	B	
ECO 3767	C	
EXT CHANGES 1/23/87 F.P.		

HONEYWELL INC.
COMPUTER CONTROL DIVISION
Old Connecticut Path, Framingham, Mass.

DR.	A. MacDonough	DATE 8/4/66
ENG.	J. DESANTIS	9/16/66
APP.	G. C. HENDRIE	9/20/66
PROJECT NO.	55223	

TITLE
DDP-516
SHIFT END EFFECTS

SIZE C | DWG NO. 015755 | REV. C

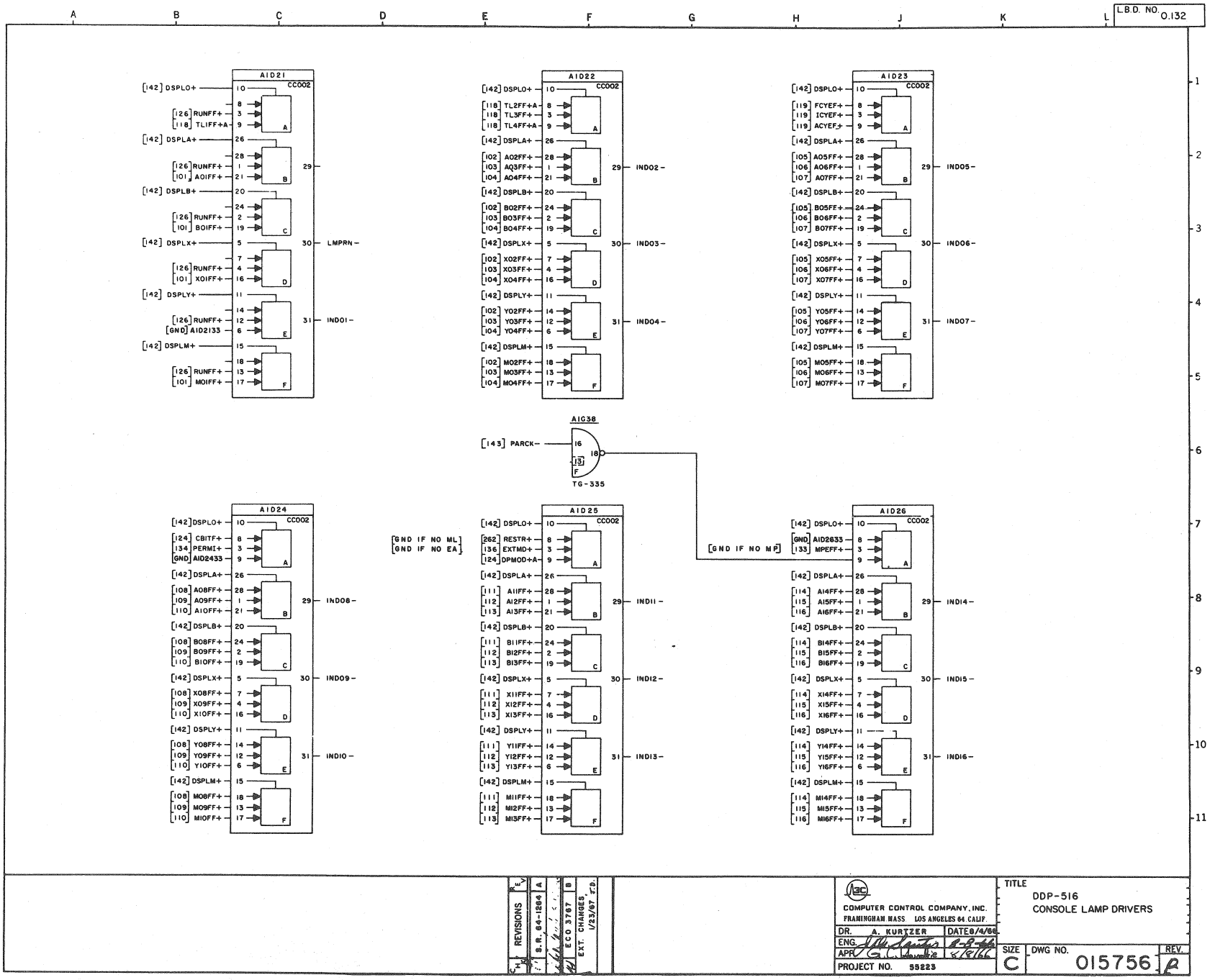
L.B.D. NO. 0.132
A
B
C
D
E
F
G
H
J
K
L
1
2
3
4
5
6
7
8
9
10
11
AID21
CC002
[142] DSPLO+
[126] RUNFF+
[118] TLIFF+A
[142] DSPLA+
[126] RUNFF+
[101] AOIFF+
[142] DSPLB+
[126] RUNFF+
[101] BOIFF+
[142] DSPLX+
[126] RUNFF+
[101] XOIFF+
[142] DSPLY+
[126] RUNFF+
[GND] AID2133
[142] DSPLM+
[126] RUNFF+
[101] MOIFF+
29
30 LMPRN-
31 INDOI-
AID22
CC002
[142] DSPLO+
[118] TL2FF+A
[118] TL3FF+
[118] TL4FF+A
[142] DSPLA+
[102] A02FF+
[103] AQ3FF+
[104] A04FF+
[142] DSPLB+
[102] B02FF+
[103] B03FF+
[104] B04FF+
[142] DSPLX+
[102] X02FF+
[103] X03FF+
[104] X04FF+
[142] DSPLY+
[102] Y02FF+
[103] Y03FF+
[104] Y04FF+
[142] DSPLM+
[102] M02FF+
[103] M03FF+
[104] M04FF+
29 IND02-
30 IND03-
31 IND04-
AID23
CC002
[142] DSPLO+
[119] FCYEF+
[119] ICYEF+
[119] ACYEF+
[142] DSPLA+
[105] A05FF+
[106] A06FF+
[107] A07FF+
[142] DSPLB+
[105] B05FF+
[106] B06FF+
[107] B07FF+
[142] DSPLX+
[105] X05FF+
[106] X06FF+
[107] X07FF+
[142] DSPLY+
[105] Y05FF+
[106] Y06FF+
[107] Y07FF+
[142] DSPLM+
[105] M05FF+
[106] M06FF+
[107] M07FF+
29 IND05-
30 IND06-
31 IND07-
AIG38
[143] PARCK-
[13]
F
TG-335
AID24
CC002
[142] DSPLO+
[124] CBITF+
[134] PERMI+
[GND] AID2433
[142] DSPLA+
[108] A08FF+
[109] A09FF+
[110] AIOFF+
[142] DSPLB+
[108] B08FF+
[109] B09FF+
[110] BIOFF+
[142] DSPLX+
[108] X08FF+
[109] X09FF+
[110] X10FF+
[142] DSPLY+
[108] Y08FF+
[109] Y09FF+
[110] Y10FF+
[142] DSPLM+
[108] M08FF+
[109] M09FF+
[110] MIOFF+
29 IND08-
30 IND09-
31 INDIO-
[GND IF NO ML]
[GND IF NO EA]
AID25
CC002
[142] DSPLO+
[262] RESTR+
[136] EXTMD+
[124] DPMOD+A
[142] DSPLA+
[111] AIIFF+
[112] AI2FF+
[113] AI3FF+
[142] DSPLB+
[111] BIIFF+
[112] BI2FF+
[113] BI3FF+
[142] DSPLX+
[111] XIIFF+
[112] XI2FF+
[113] XI3FF+
[142] DSPLY+
[111] YIIFF+
[112] YI2FF+
[113] YI3FF+
[142] DSPLM+
[111] MIIFF+
[112] MI2FF+
[113] MI3FF+
29 INDII-
30 INDI2-
31 INDI3-
[GND IF NO MP]
AID26
CC002
[142] DSPLO+
[GND] AID2633
[133] MPEFF+
[142] DSPLA+
[114] AI4FF+
[115] AI5FF+
[116] AI6FF+
[142] DSPLB+
[114] BI4FF+
[115] BI5FF+
[116] BI6FF+
[142] DSPLX+
[114] XI4FF+
[115] XI5FF+
[116] XI6FF+
[142] DSPLY+
[114] YI4FF+
[115] YI5FF+
[116] YI6FF+
[142] DSPLM+
[114] MI4FF+
[115] MI5FF+
[116] MI6FF+
29 INDI4-
30 INDI5-
31 INDI6-
REVISIONS
REV
CH
A
S.R. 64-1264
B
ECO 3767
EXT. CHANGES, 1/23/67 P.D.
COMPUTER CONTROL COMPANY, INC.
FRAMINGHAM MASS LOS ANGELES 64 CALIF.
DR. A. KURTZER DATE 8/4/66
ENG.
APP
PROJECT NO. 55223
TITLE
DDP-516
CONSOLE LAMP DRIVERS
SIZE C
DWG NO. 015756
REV. A

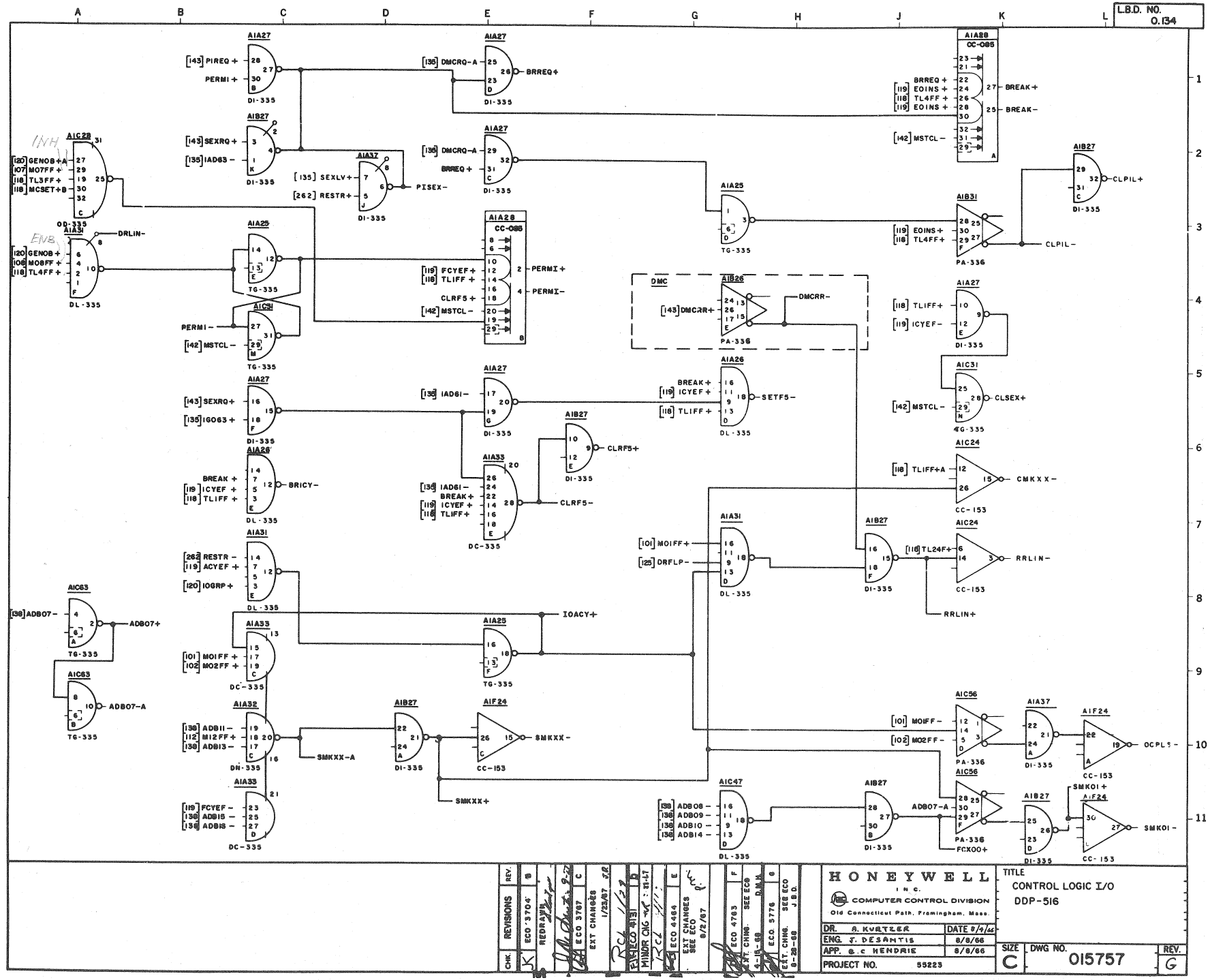
L.B.D. NO. 0.134
HONEYWELL INC.
COMPUTER CONTROL DIVISION
Old Connecticut Path, Framingham, Mass.
DR. A. KURTZER DATE 8/4/66
ENG. J. DESANTIS 8/8/66
APP. B.C. HENDRIE 8/8/66
PROJECT NO. 55223
TITLE
CONTROL LOGIC I/O
DDP-516
SIZE C
DWG NO. 015757
REV. G
REVISIONS
ECO 3704
REDRAWN
ECO 3767
EXT CHANGES 1/23/67
ECO 4131
MINOR CHG
ECO 4464
EXT CHANGES SEE ECO 8/2/67
ECO 4763
EXT. CHNG. SEE ECO 4-15-68
ECO 5776
EXT. CHNG. SEE ECO 8-28-68
DMC
DMCRR-
DMCRR+
DRLIN-
PERMI+
PERMI-
PERMI-
PERMI+
PERMI-
PISEX-
BRREQ+
BREAK+
BREAK-
CLPIL+
CLPIL-
CLSEX+
CMKXX-
RRLIN-
RRLIN+
IOACY+
SMKXX-
SMKXX-A
SMKXX+
SMKOI+
SMKOI-
OCPLS-
CLRF5+
CLRF5-
SETF5-
BRICY-
ADB07+
ADB07-A
FCX00+
INH
ENB

L.B.D. NO. 0.135

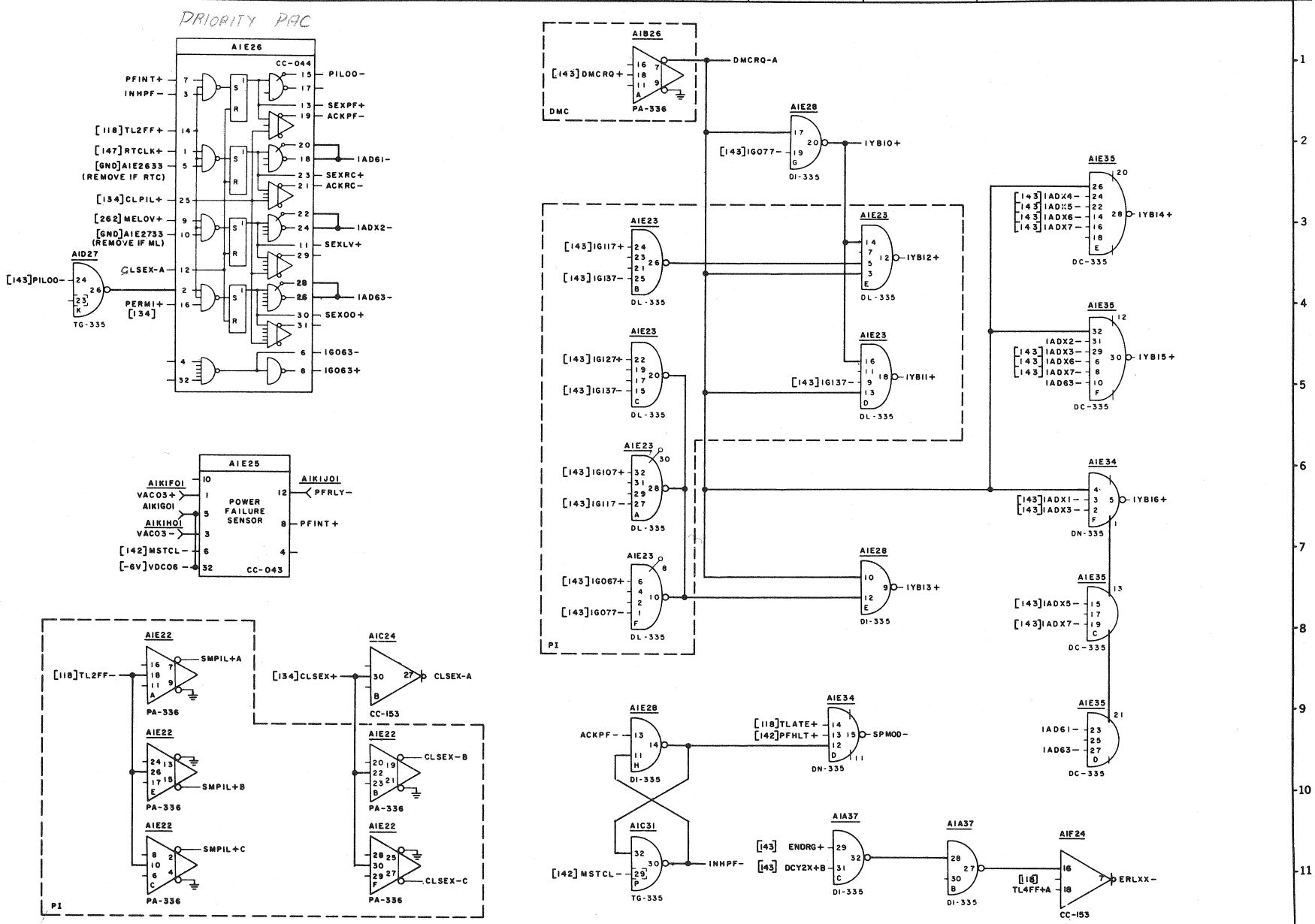

REVISIONS	REV.
S.R. 64-1264	A
ECO 3787	B
EXT CHANGES 1/23/67	
ECO 4131 MINOR CNG PER 22147	C

COMPUTER CONTROL COMPANY, INC.
FRAMINGHAM, MASS. / LOS ANGELES 64, CALIF.

DR. A. GURTZER	DATE 8/4/66
ENG.	
APP. G.C. Heaume	8/8/66
PROJECT NO. 55223	

TITLE
DDP-516
INTERRUPT ADDRESS
ENCODING

SIZE	DWG NO.	REV.
C	015758	C

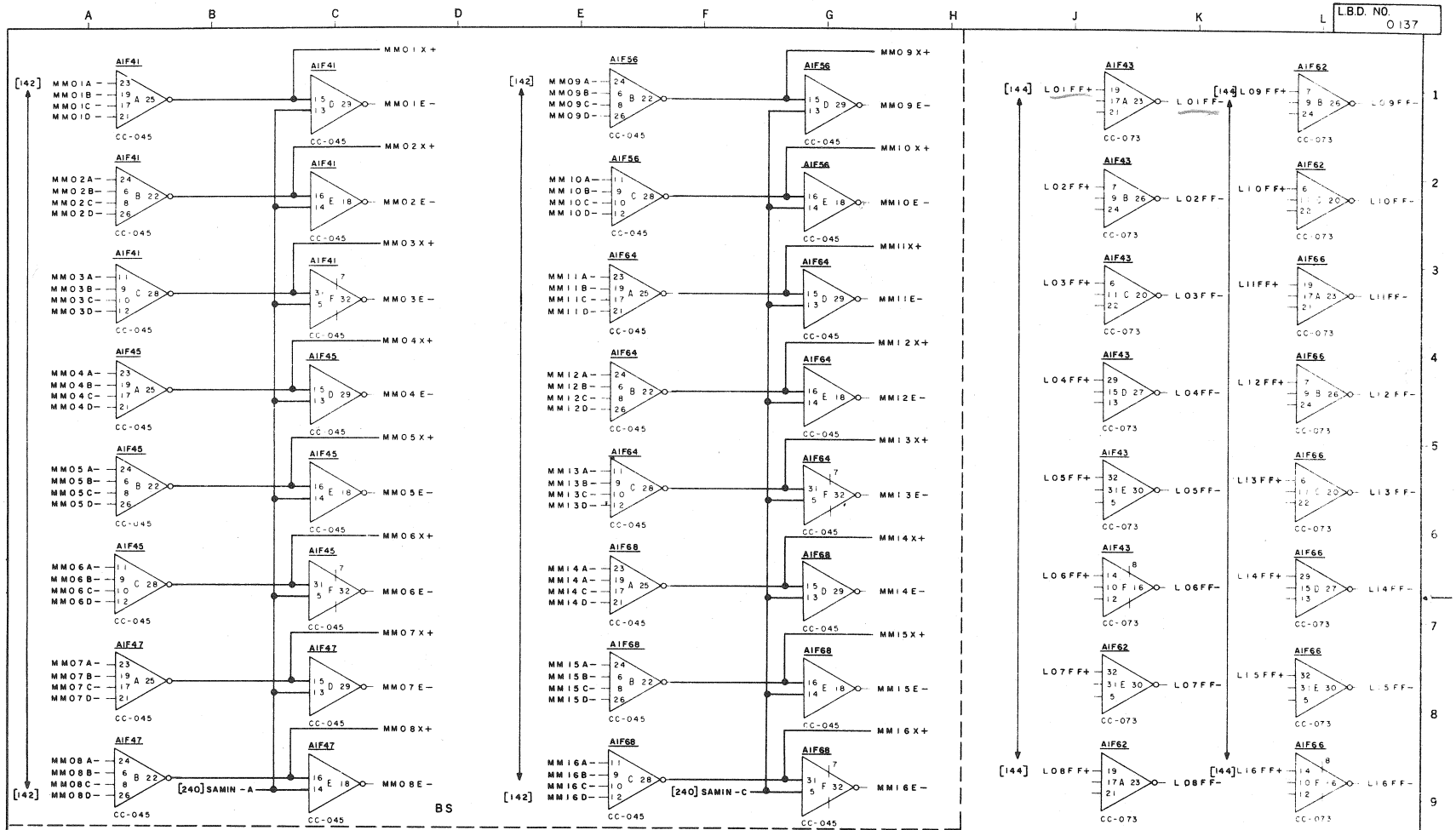

NOTE: WHEN DMA OPTION IS INSTALLED THIS DRAWING IS SUPERSEDED BY LBD 0.242 & 0.243.

REV.	REVISIONS	CHK.
B	ECO 3839 REDRAWN P.D.	

HONEYWELL INC.
COMPUTER CONTROL DIVISION
Old Connecticut Path, Framingham, Mass.

DR. J DOYLE	DATE 10/20/66	
ENG.	10-20-66	
APP. G C Hendrie	10-20-66	
PROJECT NO. 55223		

TITLE
DDP-516
M REGISTER EXPANSION

SIZE	DWG NO.	REV.
C	015760	B

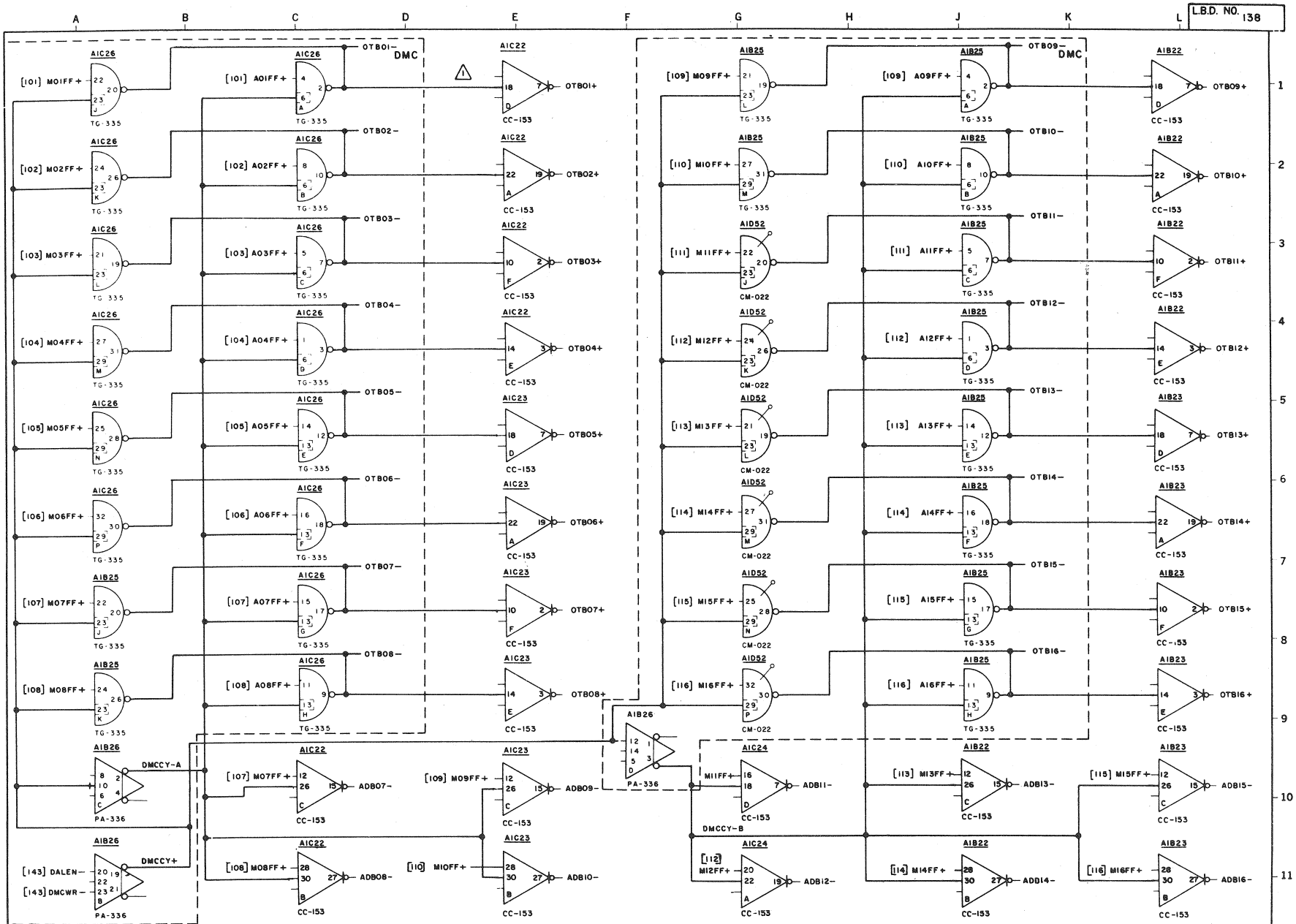

NOTE:

⚠1 IF NO DMC ANNFF- IS CONNECTED TO OTBNN- VIA CC154 JUMPER PAC AT AIC42 (SEE LBD 0.144)

REVISIONS	REV.	CHK
ECO 3704 REDRAWN	B	
ECO 3787 EXT CHANGES 1/23/67	C	
ECO 5906 EXT. CHANGES SEE ECO 6/14/68	D	

HONEYWELL INC.
COMPUTER CONTROL DIVISION
Old Connecticut Path, Framingham, Mass.

DR. P. McGonagle	DATE 8/16/66
ENG. J. DESANTIS	8/18/66
APP. G. C. HENDRIC	8/19/66
PROJECT NO. 55223	

TITLE
DDP-516
OUTPUT BUSES

SIZE	DWG NO.	REV.
C	015761	D

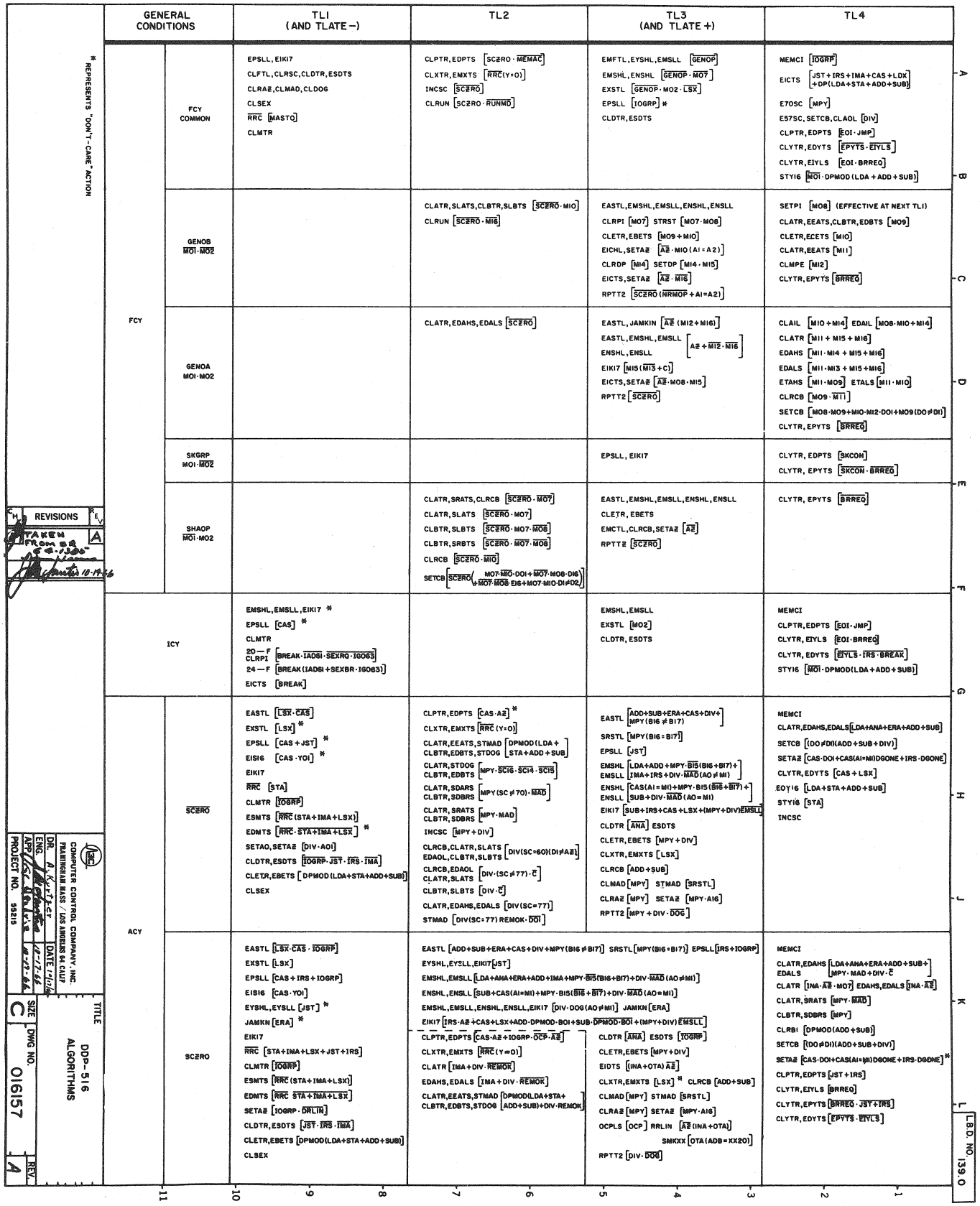
GENERAL CONDITIONS
TL1 (AND TLATE−)
TL2
TL3 (AND TLATE+)
TL4
FCY
FCY COMMON
EPSLL, EIKI7
CLFTL, CLRSC, CLDTR, ESDTS
CLRAΣ, CLMAD, CLDOG
CLSEX
RRC [MASTO]
CLMTR
CLPTR, EDPTS [SCΣRO · MEMAC]
CLXTR, EMXTS [RRC(Y=0)]
INCSC [SCΣRO]
CLRUN [SCΣRO · RUNMO]
EMFTL, EYSHL, EMSLL [GENOP]
EMSHL, ENSHL [GENOP · MO7]
EXSTL [GENOP · MO2 · LSX]
EPSLL [IOGRP] *
CLDTR, ESDTS
MEMCI [IOGRP]
EICTS [JST+IRS+IMA+CAS+LDX +DP(LDA+STA+ADD+SUB)]
E7OSC [MPY]
E57SC, SETCB, CLAOL [DIV]
CLPTR, EDPTS [EOI · JMP]
CLYTR, EDYTS [EPYTS · EIYLS]
CLYTR, EIYLS [EOI · BRREQ]
STYI6 [MOI · DPMOD(LDA+ADD+SUB)]
GENOB MOI · MO2
CLATR, SLATS, CLBTR, SLBTS [SCΣRO · MIO]
CLRUN [SCΣRO · MI6]
EASTL, EMSHL, EMSLL, ENSHL, ENSLL
CLRPI [MO7] STRST [MO7 · MO8]
CLETR, EBETS [MO9+MIO]
EICHL, SETAΣ [AΣ · MIO(AI=A2)]
CLRDP [MI4] SETDP [MI4 · MI5]
EICTS, SETAΣ [AΣ · MI6]
RPTT2 [SCΣRO(NRMOP+AI=A2)]
SETPI [MO8] (EFFECTIVE AT NEXT TL1)
CLATR, EEATS, CLBTR, EDBTS [MO9]
CLETR, ECETS [MIO]
CLATR, EEATS [MII]
CLMPE [MI2]
CLYTR, EPYTS [BRREQ]
GENOA MOI · MO2
CLATR, EDAHS, EDALS [SCΣRO]
EASTL, JAMKIN [AΣ (MI2+MI6)]
EASTL, EMSHL, EMSLL [AΣ+MI2 · MI6]
ENSHL, ENSLL
EIKI7 [MI5(MI3+C)]
EICTS, SETAΣ [AΣ · MO8 · MI5]
RPTT2 [SCΣRO]
CLAIL [MIO+MI4] EDAIL [MO8 · MIO+MI4]
CLATR [MII+MI5+MI6]
EDAHS [MII · MI4+MI5+MI6]
EDALS [MII · MI3+MI5+MI6]
ETAHS [MII · MO9] ETALS [MII · MIO]
CLRCB [MO9 · MII]
SETCB [MO8 · MO9+MIO · MI2 · DOI+MO9(DO≠DI)]
CLYTR, EPYTS [BRREQ]
SKGRP MOI · MO2
EPSLL, EIKI7
CLYTR, EDPTS [SKCON]
CLYTR, EPYTS [SKCON · BRREQ]
SHAOP MOI · MO2
CLATR, SRATS, CLRCB [SCΣRO · MO7]
CLATR, SLATS [SCΣRO · MO7]
CLBTR, SLBTS [SCΣRO · MO7 · MO8]
CLBTR, SRBTS [SCΣRO · MO7 · MO8]
CLRCB [SCΣRO · MIO]
SETCB [SCΣRO(MO7·MIO·DOI+MO7·MO8·DI6 +MO7·MO8·EI6+MO7·MIO·DI≠D2)]
EASTL, EMSHL, EMSLL, ENSHL, ENSLL
CLETR, EBETS
EMCTL, CLRCB, SETAΣ [AΣ]
RPTTΣ [SCΣRO]
CLYTR, EPYTS [BRREQ]
ICY
EMSHL, EMSLL, EIKI7 *
EPSLL [CAS] *
CLMTR
20—F CLRPI [BREAK · IAD6I · SEXRO · IGO63]
24—F [BREAK(IAD6I+SEXBR · IGO63)]
EICTS [BREAK]
EMSHL, EMSLL
EXSTL [MO2]
CLDTR, ESDTS
MEMCI
CLPTR, EDPTS [EOI · JMP]
CLYTR, EIYLS [EOI · BRREQ]
CLYTR, EDYTS [EIYLS · IRS · BREAK]
STYI6 [MOI · DPMOD(LDA+ADD+SUB)]
ACY
SCΣRO
EASTL [LSX · CAS]
EXSTL [LSX] *
EPSLL [CAS+JST] *
EISI6 [CAS · YOI] *
EIKI7
RRC [STA]
CLMTR [IOGRP]
ESMTS [RRC(STA+IMA+LSX)]
EDMTS [RRC · STA+IMA+LSX] *
SETAO, SETAΣ [DIV · AOI]
CLDTR, ESDTS [IOGRP · JST · IRS · IMA]
CLETR, EBETS [DPMOD(LDA+STA+ADD+SUB)]
CLSEX
CLPTR, EDPTS [CAS · AΣ] *
CLXTR, EMXTS [RRC(Y=0)]
CLATR, EEATS, STMAD [DPMOD(LDA+STA+ADD+SUB)] CLBTR, EDBTS, STDOG
CLATR, STDOG CLBTR, EDBTS [MPY · SCI6 · SCI4 · SCI5]
CLATR, SDARS CLBTR, SDBRS [MPY(SC≠70) · MAD]
CLATR, SRATS CLBTR, SDBRS [MPY · MAD]
INCSC [MPY+DIV]
CLRCB, CLATR, SLATS EDAOL, CLBTR, SLBTS [DIV(SC=60)(DI≠AΣ)]
CLRCB, EDAOL CLATR, SLATS [DIV · (SC≠77) · C]
CLBTR, SLBTS [DIV · C]
CLATR, EDAHS, EDALS [DIV(SC=77)]
STMAD [DIV(SC=77) REMOK · DOI]
EASTL [ADD+SUB+ERA+CAS+DIV+MPY(BI6≠BI7)]
SRSTL [MPY(BI6=BI7)]
EPSLL [JST]
EMSHL EMSLL [LDA+ADD+MPY · BI5(BI6+BI7)+IMA+IRS+DIV · MAD(AO≠MI)]
ENSHL ENSLL [CAS(AI=MI)+MPY · BI5(BI6+BI7)+SUB+DIV · MAD(AO=MI)]
EIKI7 [SUB+IRS+CAS+LSX+(MPY+DIV)EMSLL]
CLDTR [ANA] ESDTS
CLETR, EBETS [MPY+DIV]
CLXTR, EMXTS [LSX]
CLRCB [ADD+SUB]
CLMAD [MPY] STMAD [SRSTL]
CLRAΣ [MPY] SETAΣ [MPY · AI6]
RPTT2 [MPY+DIV · DO6]
MEMCI
CLATR, EDAHS, EDALS [LDA+ANA+ERA+ADD+SUB]
SETCB [(DO≠DI)(ADD+SUB+DIV)]
SETAΣ [CAS · DOI+CAS(AI=MI)DGONE+IRS · DGONE]
CLYTR, EDYTS [CAS+LSX]
EOYI6 [LDA+STA+ADD+SUB]
STYI6 [STA]
INCSC
SCΣRO
EASTL [LSX · CAS · IOGRP]
EXSTL [LSX]
EPSLL [CAS+IRS+IOGRP]
EISI6 [CAS · YOI]
EYSHL, EYSLL [JST] *
JAMKN [ERA] *
EIKI7
RRC [STA+IMA+LSX+JST+IRS]
CLMTR [IOGRP]
ESMTS [RRC(STA+IMA+LSX)]
EDMTS [RRC STA+IMA+LSX]
SETAΣ [IOGRP · DRLIN]
CLDTR, ESDTS [JST · IRS · IMA]
CLETR, EBETS [DPMOD(LDA+STA+ADD+SUB)]
CLSEX
EASTL [ADD+SUB+ERA+CAS+DIV+MPY(BI6≠BI7)] SRSTL [MPY(BI6=BI7)] EPSLL [IRS+IOGRP]
EYSHL, EYSLL, EIKI7 [JST]
EMSHL, EMSLL [LDA+ANA+ERA+ADD+IMA+MPY · BI5(BI6+BI7)+DIV · MAD(AO≠MI)]
ENSHL, ENSLL [SUB+CAS(AI=MI)+MPY · BI5(BI6+BI7)+DIV · MAD(AO=MI)]
EMSHL, EMSLL, ENSHL, ENSLL, EIKI7 [DIV · DOG(AO≠MI)] JAMKN [ERA]
EIKI7 [IRS · AΣ+CAS+LSX+ADD · DPMOD · BOI+SUB · DPMOD · BOI+(MPY+DIV)EMSLL]
CLPTR, EDPTS [CAS · AΣ+IOGRP · OCP · AΣ]
CLXTR, EMXTS [RRC(Y=0)]
CLATR [IMA+DIV · REMOK]
EDAHS, EDALS [IMA+DIV · REMOK]
CLATR, EEATS, STMAD [DPMOD(LDA+STA+ADD+SUB)+DIV · REMOK] CLBTR, EDBTS, STDOG
CLDTR [ANA] ESDTS [IOGRP]
CLETR, EBETS [MPY+DIV]
EIDTS [(IMA+OTA) AΣ]
CLXTR, EMXTS [LSX] * CLRCB [ADD+SUB]
CLMAD [MPY] STMAD [SRSTL]
CLRAΣ [MPY] SETAΣ [MPY · AI6]
OCPLS [OCP] RRLIN [AΣ(IMA+OTA)]
SMKXX [OTA(ADB=XX20)]
RPTT2 [DIV · DO6]
MEMCI
CLATR, EDAHS EDALS [LDA+ANA+ERA+ADD+SUB+MPY · MAD+DIV · C]
CLATR [IMA · AΣ · MO7] EDAHS, EDALS [IMA · AΣ]
CLATR, SRATS [MPY · MAD]
CLBTR, SDBRS [MPY]
CLRBI [DPMOD(ADD+SUB)]
SETCB [(DO≠DI)(ADD+SUB+DIV)]
SETAΣ [CAS · DOI+CAS(AI=MI)DGONE+IRS · DGONE] *
CLPTR, EDPTS [JST+IRS]
CLYTR, EIYLS [BRREQ]
CLYTR, EPYTS [BRREQ · JST+IRS]
CLYTR, EDYTS [EPYTS · EIYLS]
* REPRESENTS "DON'T-CARE" ACTION
REVISIONS
CH
REV
A
TAKEN FROM SB C-1-136
10-19-66
COMPUTER CONTROL COMPANY, INC.
FRAMINGHAM MASS. / LOS ANGELES 64, CALIF.
DR. R. Kyritsis
ENG.
APP'D
DATE 10-17-66
PROJECT NO. 99215
SIZE C
DWG NO. 016157
REV. A
TITLE
DDP-516 ALGORITHMS
L.B.D. NO. 139.0
A B C D E F G H J K L
11 10 9 8 7 6 5 4 3 2 1

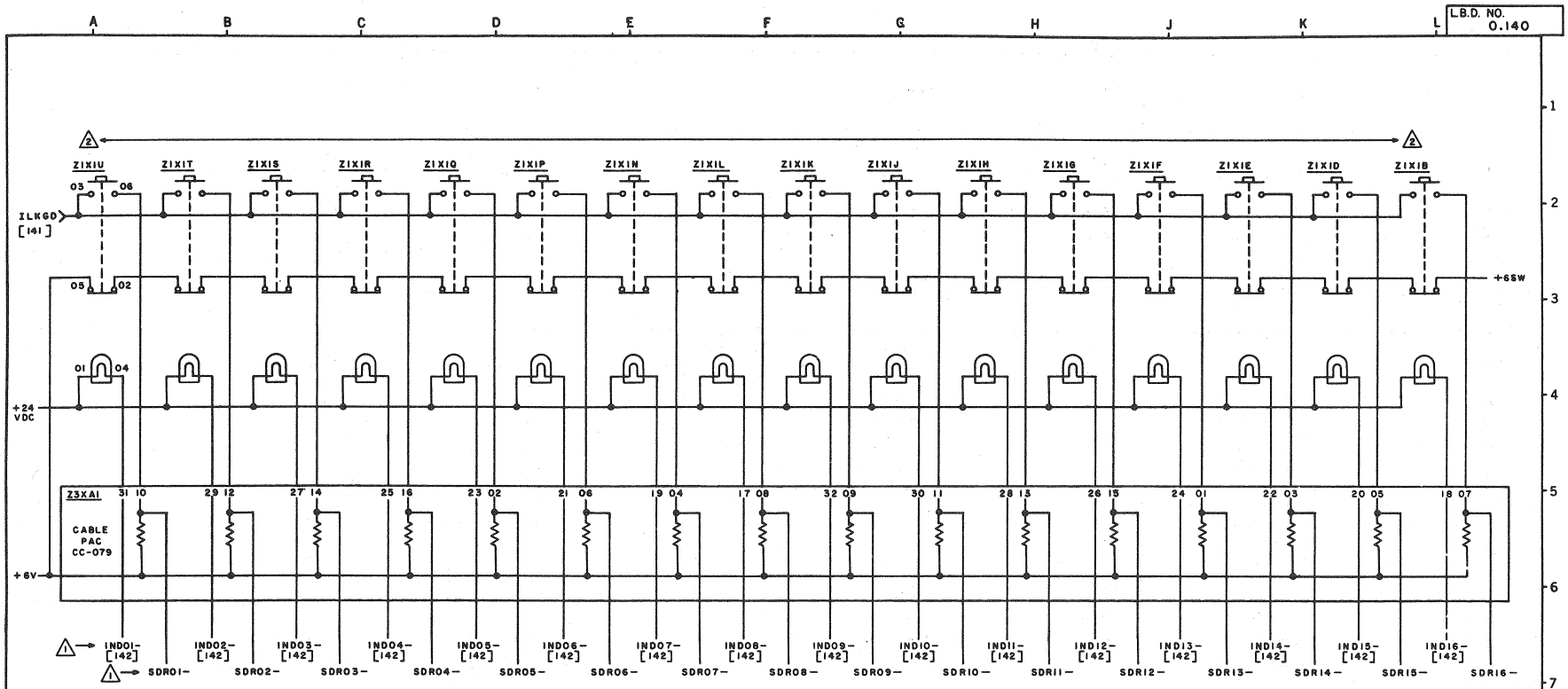

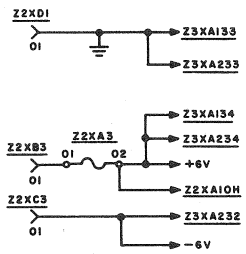

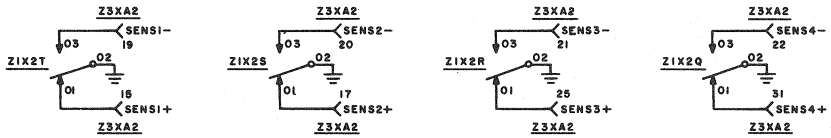

NOTE:

1. EACH SIGNAL IS TWISTED WITH A GROUND AND CABLED TO M.F.
2. PIN NUMBERS ON PUSHBUTTON-INDICATORS (Z1XIB THRU Z1XIT) SAME AS Z1XIU CODING.

REV.	REVISIONS	EXT. CHANGES 7/12/68
A	S.R. 64-1264	
B	ECO-5724	

COMPUTER CONTROL COMPANY, INC.
FRAMINGHAM, MASS. / LOS ANGELES 64, CALIF.

DR. A. KURTZER	DATE 6/11/66	
ENG.		8-12-66
APP.		8/12/66
PROJECT NO. 55223		

TITLE
DDP-516
CONSOLE INDICATORS

SIZE C | DWG NO. 015762 | REV. B

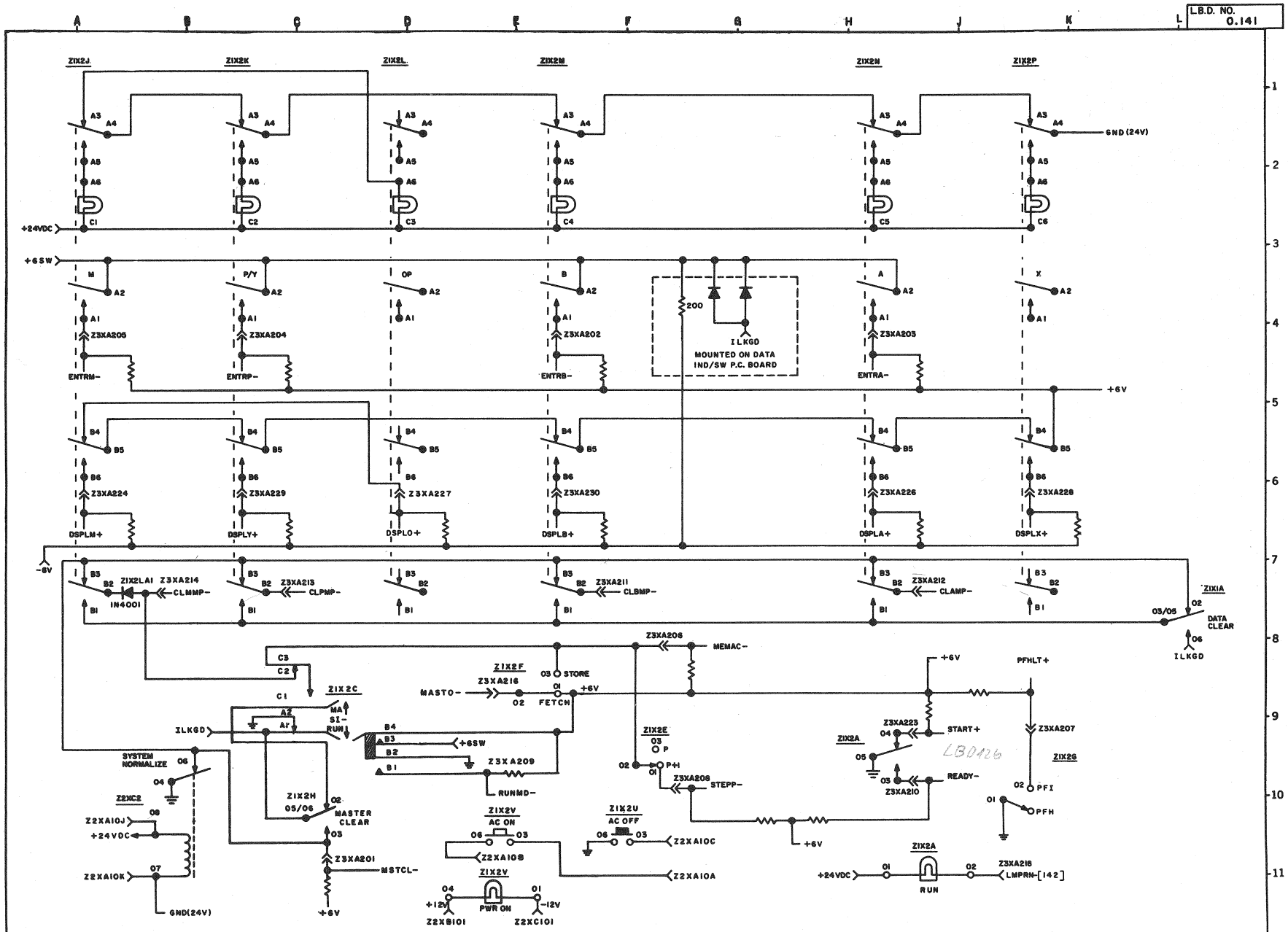

NOTE:
1. EXCEPT WHERE NOTED ALL RESISTORS AND DIODES ARE ON A CC-080 CABLE PAC (Z3XA2)
2. EXCEPT WHERE NOTED ALL RESISTORS ARE 1K.

REV	REVISIONS	CH
A	S.R. 64-1264	
B	ECO #3641	
C	ECO #4217	
D	ECO 5906	
E	ECO-5724	

Z1X2V06 TO Z2XA108 WAS X2XA10J. 10/2/66
EXT. CHANGES 4/11/67
EXT. CHANGES SEE ECO 6/14/68
EXT. CHANGES 7/12/68

COMPUTER CONTROL COMPANY, INC.
FRAMINGHAM, MASS / LOS ANGELES 64, CALIF.

DR. A. KURTZER DATE 8/4/66
ENG. 8-8-66
APP. 8/12/66
PROJECT NO. 55223

TITLE
DDP-516
CONSOLE
SWITCHES

SIZE C DWG NO. 015763 REV. E

L.B.D. NO. 142

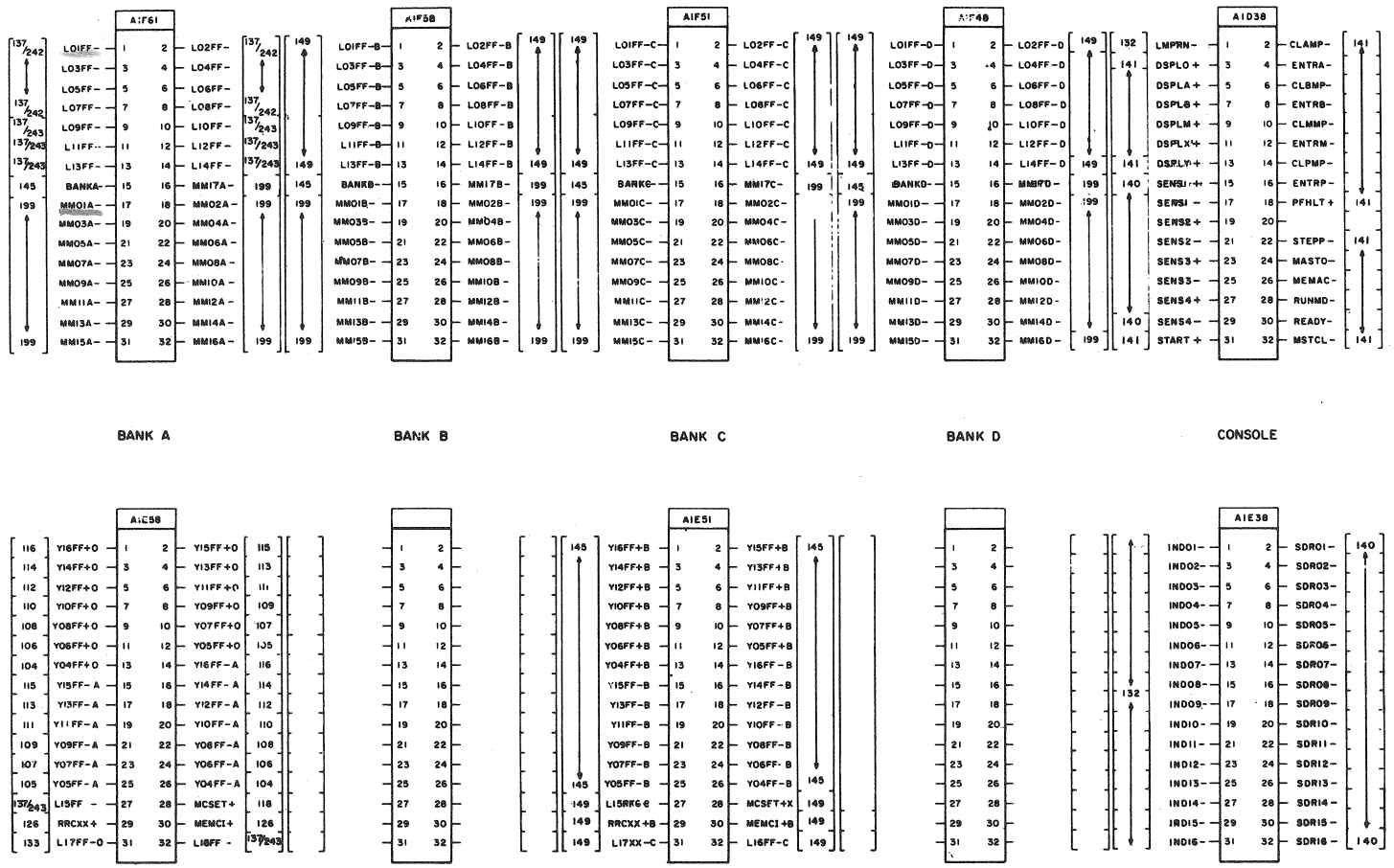

REVISIONS	REV
S.R. 64-1264	A
ECO 3767	B
EXT CHANGES 1/23/67 RCL	

COMPUTER CONTROL COMPANY, INC.
FRAMINGHAM MASS LOS ANGELES 64 CALIF

DR.	A. KURTZER	DATE 8/4/66
ENG.		
APR		
PROJECT NO.	55223	

TITLE
DDP-516
CONSOLE AND
MEMORY CABLE
CONNECTOR

SIZE	DWG NO.	REV.
C	015764	F

L.B.D. NO. 143

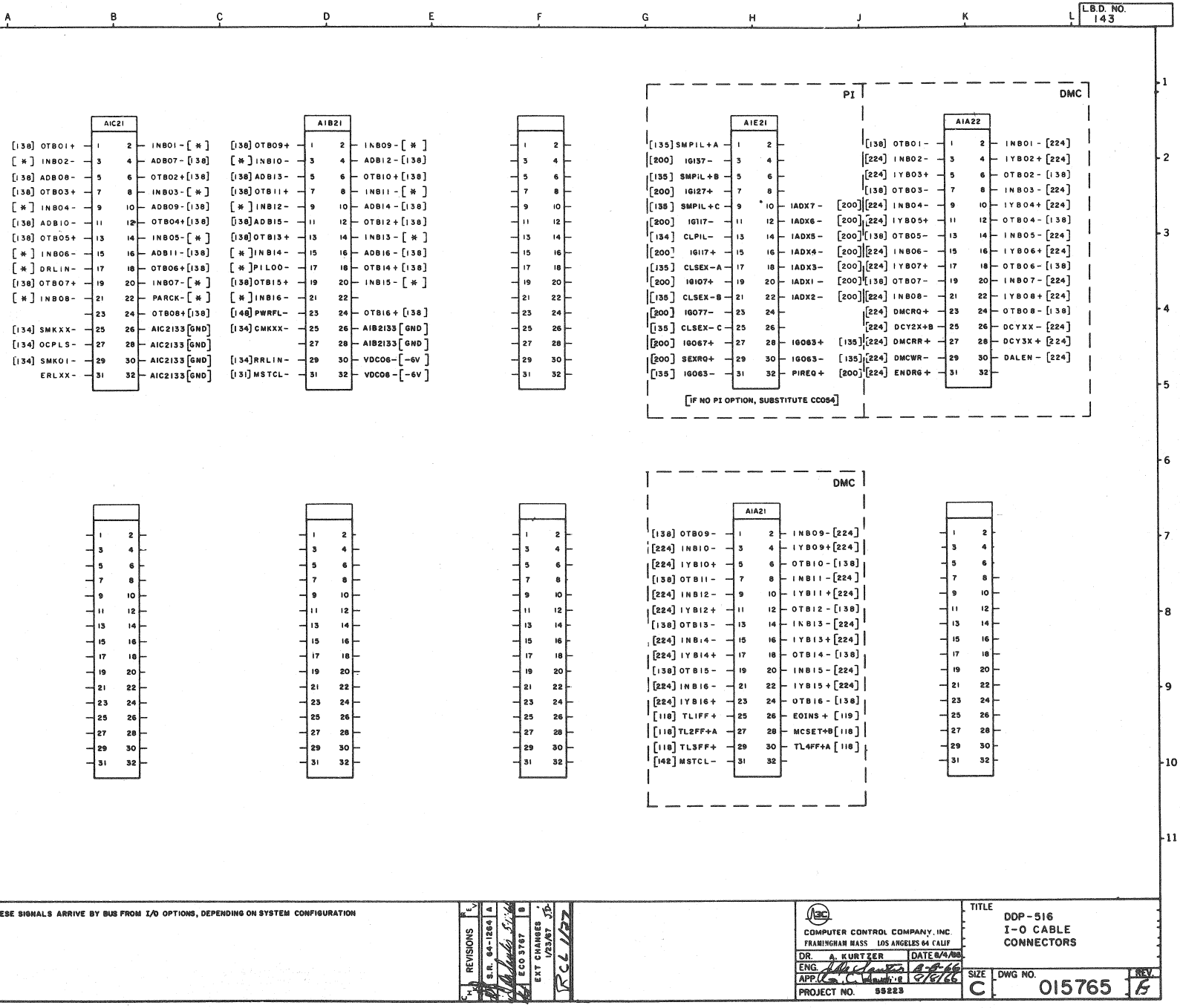

[*] THESE SIGNALS ARRIVE BY BUS FROM I/O OPTIONS, DEPENDING ON SYSTEM CONFIGURATION

REVISIONS			
CH	S.R. 64-1264	A	
	ECO 3767	B	
	EXT CHANGES 1/23/67 JD		

COMPUTER CONTROL COMPANY, INC.
FRAMINGHAM MASS LOS ANGELES 64 CALIF

DR. A. KURTZER	DATE 8/4/66	
ENG.		
APP.	9/8/66	
PROJECT NO. 55223		

TITLE
DDP-516
I-O CABLE
CONNECTORS

SIZE C | DWG NO. 015765 | REV. B

L.B.D. NO. 144

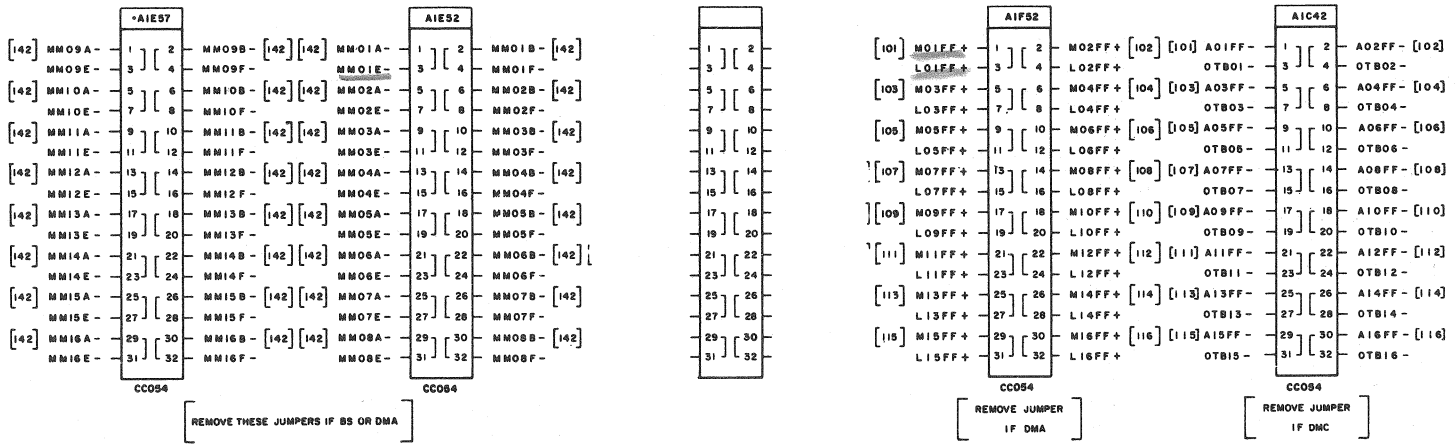

REVISIONS		
L		
K		
J	S.R. 64-1284	A

COMPUTER CONTROL COMPANY, INC
FRAMINGHAM, MASS. LOS ANGELES, CALIF.

DR.	A. KURTZER	DATE 8/4/66
ENG.		8-9-66
APP.		8/16/66
PROJECT NO.	55223	

TITLE
DDP-516
OPTION JUMPERS

SIZE	DWG NO.	REV.
C	015766	A

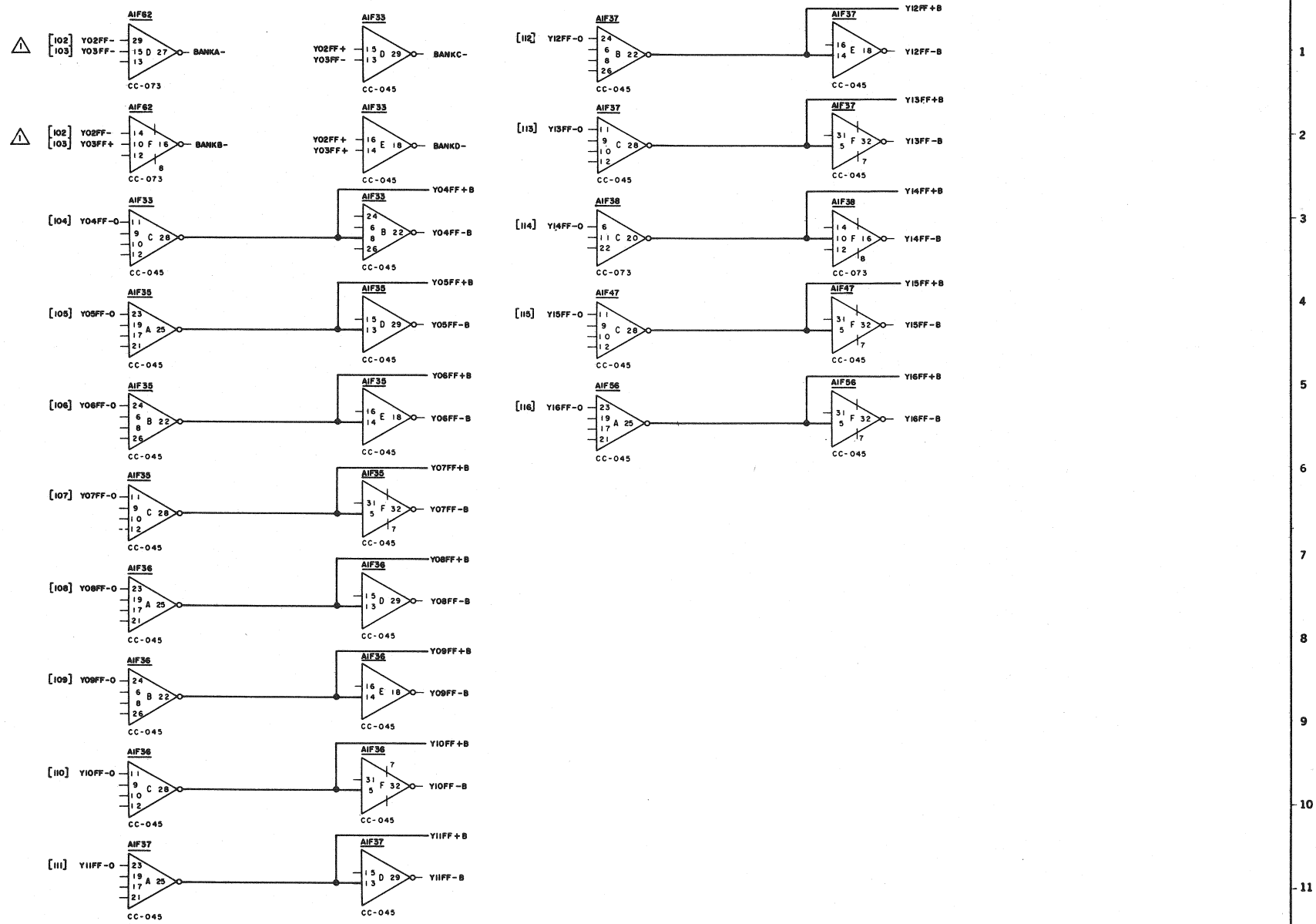

⚠ THIS SIGNAL ONLY WIRED IN MACHINES WITH OVER 16K MEMORY

CHK.	REVISIONS	REV.
	ECO 3704	B
	REDRAWN	
	EC04763	C
	EXT. CHNG. SEE ECO	4/12/68 L.O.S.

HONEYWELL INC.
COMPUTER CONTROL DIVISION
Old Connecticut Path, Framingham, Mass.

DR. Q. Kuntzer DATE 8/4/66
ENG. [illegible]
APP. G C HENDRIX
PROJECT NO. 55223

TITLE
DDP-516
Y-REGISTER EXPANSION

SIZE C DWG NO. 015767 REV. C

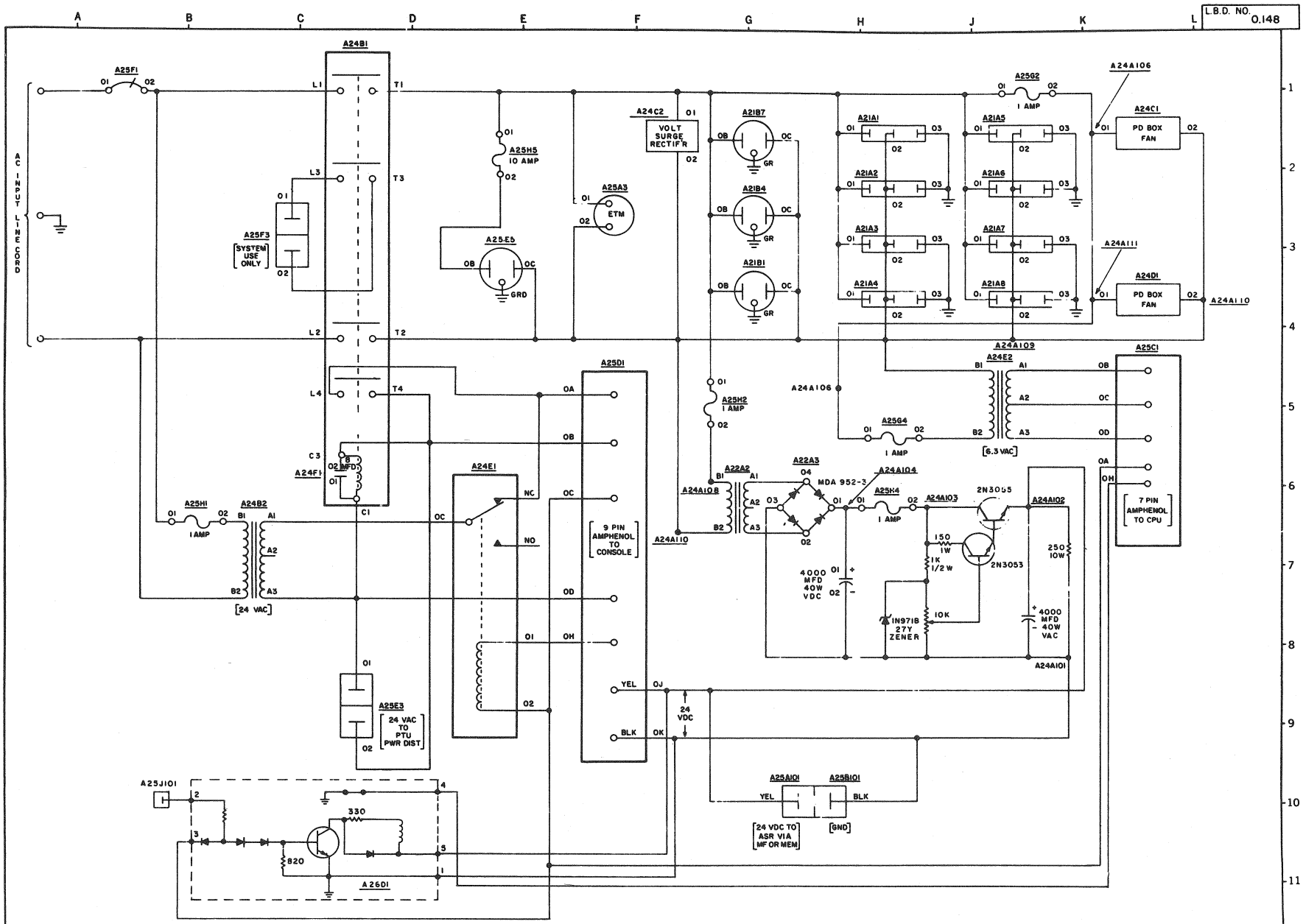

REV	REVISIONS
A	S.R. 64-1264
B	ECO 3700 EXT. CHANGES SEE ECO 11-9-66
C	ECO 4142 EXT CHANGES SEE ECO 3/6/67
D	ECO# 4217 EXT. CHANGES
E	ECO 4515 A22A3 D3 WAS D1 A22A3 D1 WAS D3
F	ECO 4512 EXT. CHANGES J.D. 8/16/67
G	ECO 5221 EXT. CHANGES D.S. 4/19/68

COMPUTER CONTROL COMPANY, INC.
FRAMINGHAM MASS LOS ANGELES 64 CALIF

DR. A. KURTZER DATE 8/4/66
ENG.
APP.
PROJECT NO. 55223

TITLE
DDP-516
POWER DISTRIBUTION

SIZE C DWG NO. 015768 REV. G

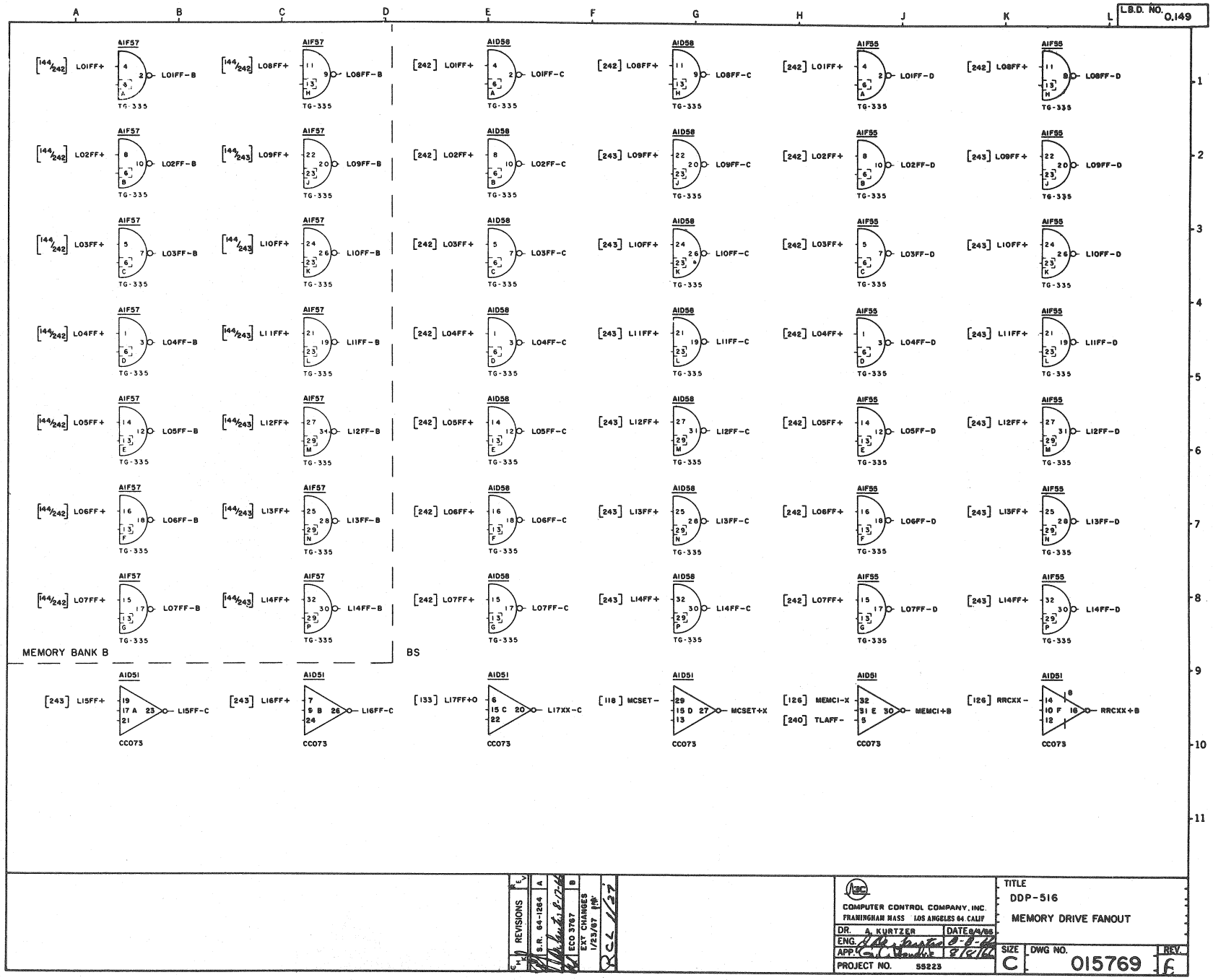
L.B.D. NO. 0.149
A
B
C
D
E
F
G
H
J
K
L
1
2
3
4
5
6
7
8
9
10
11
[144/242] L01FF+
AIF57
TG-335
L01FF-B
[144/242] L08FF+
L08FF-B
[242] L01FF+
AID58
L01FF-C
[242] L08FF+
L08FF-C
[242] L01FF+
AIF55
L01FF-D
[242] L08FF+
L08FF-D
[144/242] L02FF+
L02FF-B
[144/243] L09FF+
L09FF-B
[242] L02FF+
L02FF-C
[243] L09FF+
L09FF-C
[242] L02FF+
L02FF-D
[243] L09FF+
L09FF-D
[144/242] L03FF+
L03FF-B
[144/243] L10FF+
L10FF-B
[242] L03FF+
L03FF-C
[243] L10FF+
L10FF-C
[242] L03FF+
L03FF-D
[243] L10FF+
L10FF-D
[144/242] L04FF+
L04FF-B
[144/243] L11FF+
L11FF-B
[242] L04FF+
L04FF-C
[243] L11FF+
L11FF-C
[242] L04FF+
L04FF-D
[243] L11FF+
L11FF-D
[144/242] L05FF+
L05FF-B
[144/243] L12FF+
L12FF-B
[242] L05FF+
L05FF-C
[243] L12FF+
L12FF-C
[242] L05FF+
L05FF-D
[243] L12FF+
L12FF-D
[144/242] L06FF+
L06FF-B
[144/243] L13FF+
L13FF-B
[242] L06FF+
L06FF-C
[243] L13FF+
L13FF-C
[242] L06FF+
L06FF-D
[243] L13FF+
L13FF-D
[144/242] L07FF+
L07FF-B
[144/243] L14FF+
L14FF-B
[242] L07FF+
L07FF-C
[243] L14FF+
L14FF-C
[242] L07FF+
L07FF-D
[243] L14FF+
L14FF-D
MEMORY BANK B
BS
AID51
CC073
[243] L15FF+
L15FF-C
[243] L16FF+
L16FF-C
[133] L17FF+O
L17XX-C
[118] MCSET-
MCSET+X
[126] MEMCI-X
[240] TLAFF-
MEMCI+B
[126] RRCXX-
RRCXX+B
REVISIONS
REV
A
S.R. 64-1264
B
ECO 3767
EXT CHANGES
1/23/67
COMPUTER CONTROL COMPANY, INC.
FRAMINGHAM MASS LOS ANGELES 64 CALIF
DR. A. KURTZER
DATE 8/4/66
ENG.
APP.
PROJECT NO. 55223
TITLE
DDP-516
MEMORY DRIVE FANOUT
SIZE C
DWG NO. 015769
REV. E

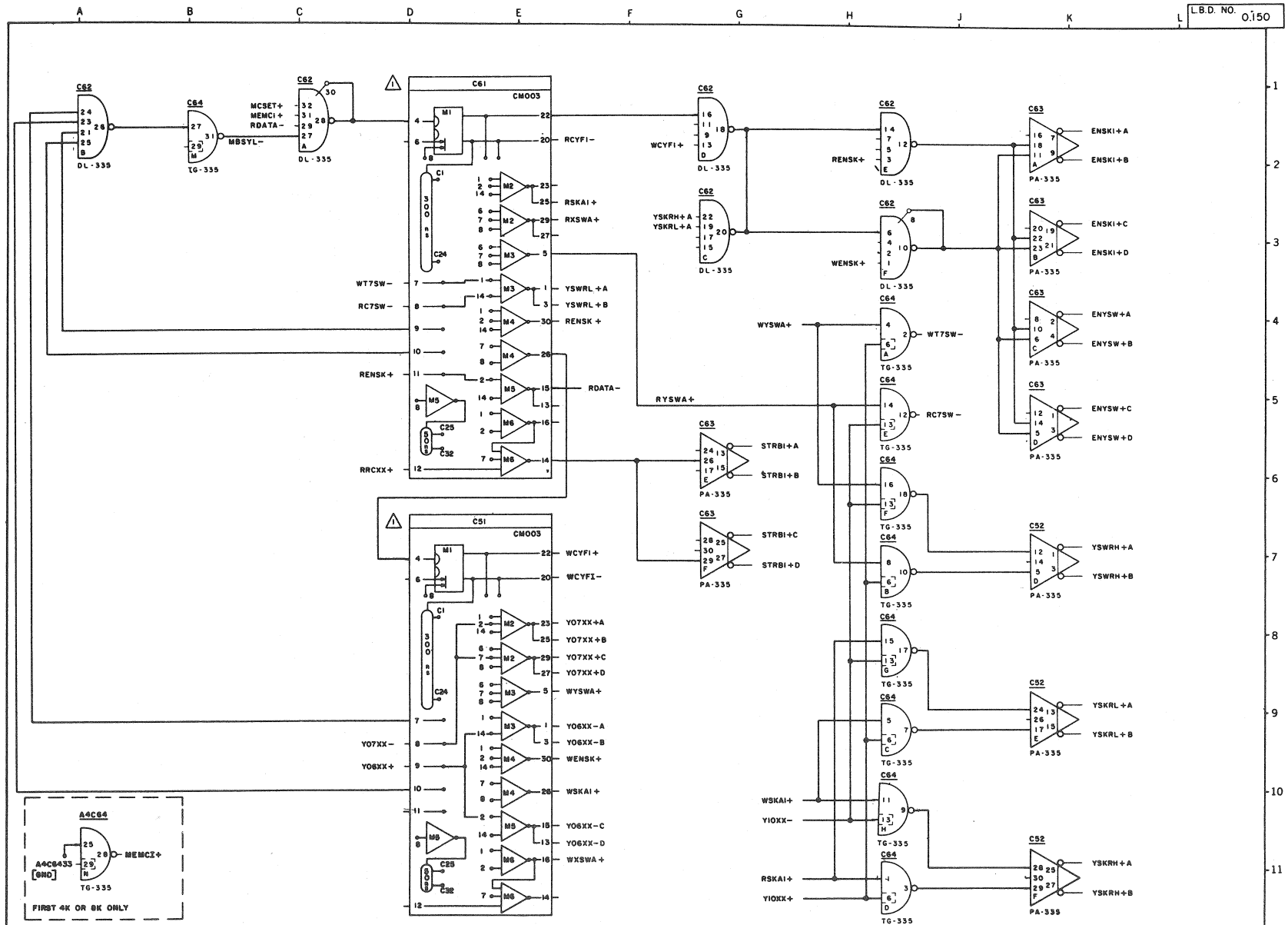

⚠ SEE DWG NO. A009705XXX FOR TYPICAL TIMING DISTRIBUTER (CM003) TAP WIRING

REVISIONS			
S.R. 64-1264	A		
ECO 4350	B	EXT. CHANGES 4/26/67	
ECO 4448	C	EXT. CHANGES SEE ECO 6/27/67	
ECO 5170	D	EXT. CHANGES SEE ECO 8/1/68	

COMPUTER CONTROL COMPANY, INC.
FRAMINGHAM MASS / LOS ANGELES 64 CALIF

DR.	A. KURTZER	DATE 8/4/66
ENG.	R. W. KRONER	8/11/66
APP.		8/17/66
PROJECT NO. 55217		

TITLE: TIMING & CONTROL

SIZE C | DWG NO. 015415 | REV. D

L.B.D. NO. 0.151

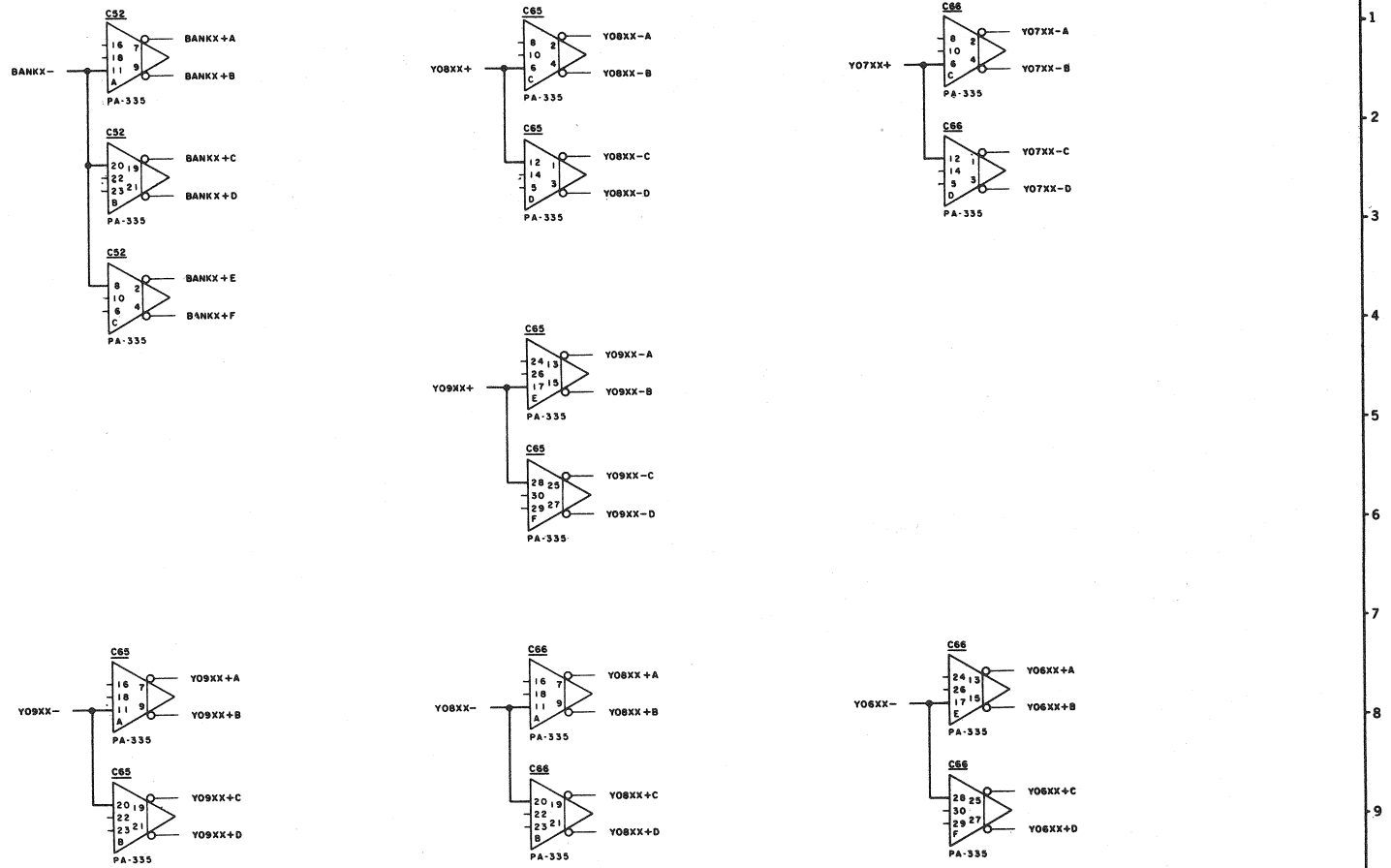

REVISIONS	REV.
1 S.R. 64-1264	A
2	

COMPUTER CONTROL COMPANY, INC
FRAMINGHAM MASS LOS ANGELES 64 CALIF

DR. A. KURTZER	DATE 8/4/66	
ENG. R.W. FUTHER	8/11/66	
APP.	8/17/66	
PROJECT NO. 55217		

TITLE: ADDRESS BUFFER

SIZE	DWG NO.	REV.
C	015416	A

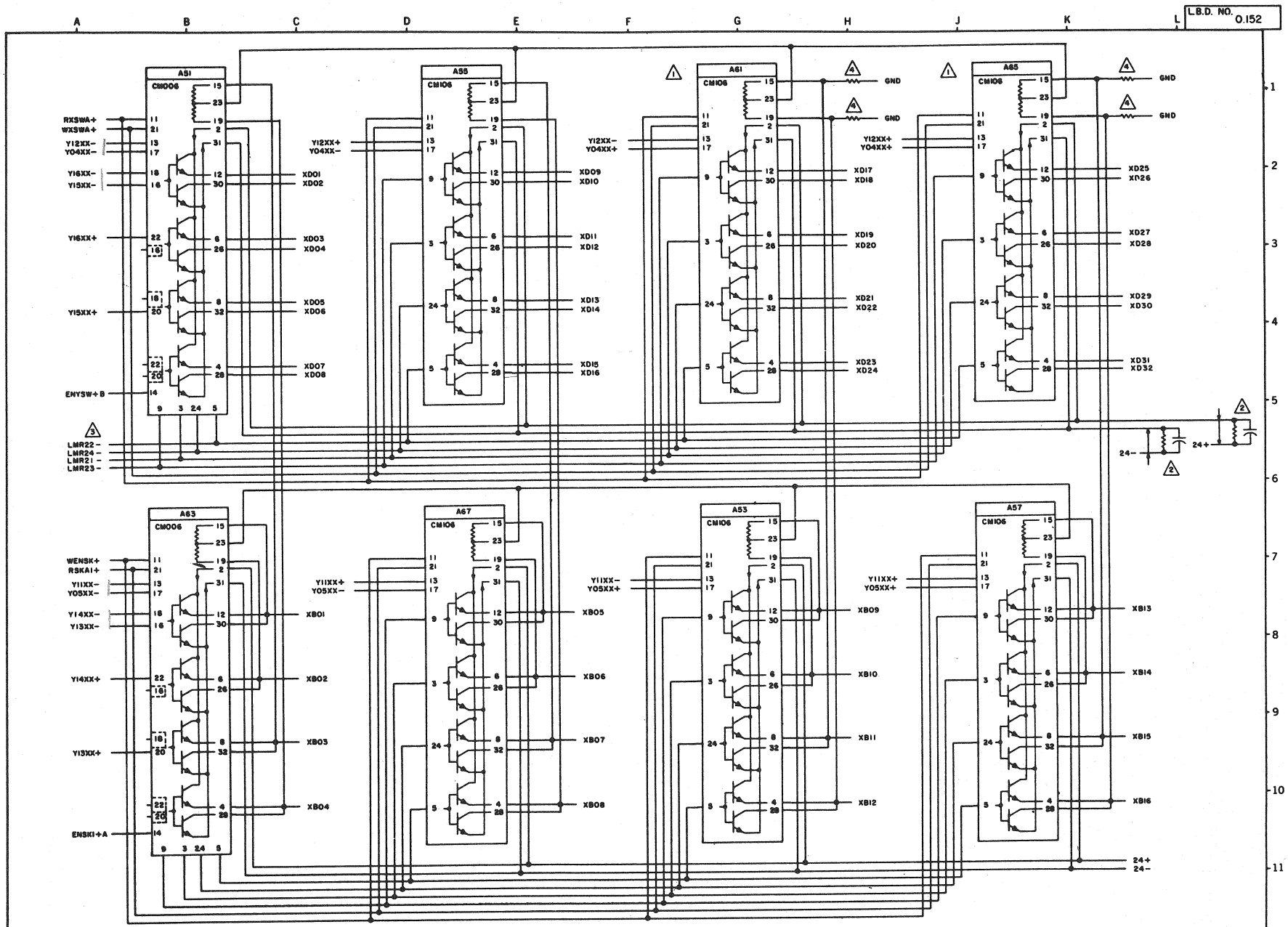

1. FOR 4096 WORD MEMORY DELETE CM106's IN PAC LOCATIONS A65 & A61
2. 5 WATT RESISTOR & CAP (MOUNTED ON RESISTOR PLATE)
3. 1/4 WATT RESISTOR (MOUNTED ON BACK PLANE)
4. 1/4 WATT RESISTOR (MOUNTED ON BACK PLANE) ON 4096 WORD MODULE

REVISIONS			
S.R. 64-1264	A		
ECO 5906	B		
EXT. CHANGES SEE ECO 6/14/66			

COMPUTER CONTROL COMPANY, INC.
FRAMINGHAM MASS / LOS ANGELES 64 CALIF

DR. A. KURTZER	DATE 8/9/66
ENG. R.W. FLETCHER	8/11/66
APP.	8/17/66
PROJECT NO. 55217	

TITLE
X DECODING AND SELECTION

SIZE	DWG NO.	REV.
C	015417	B

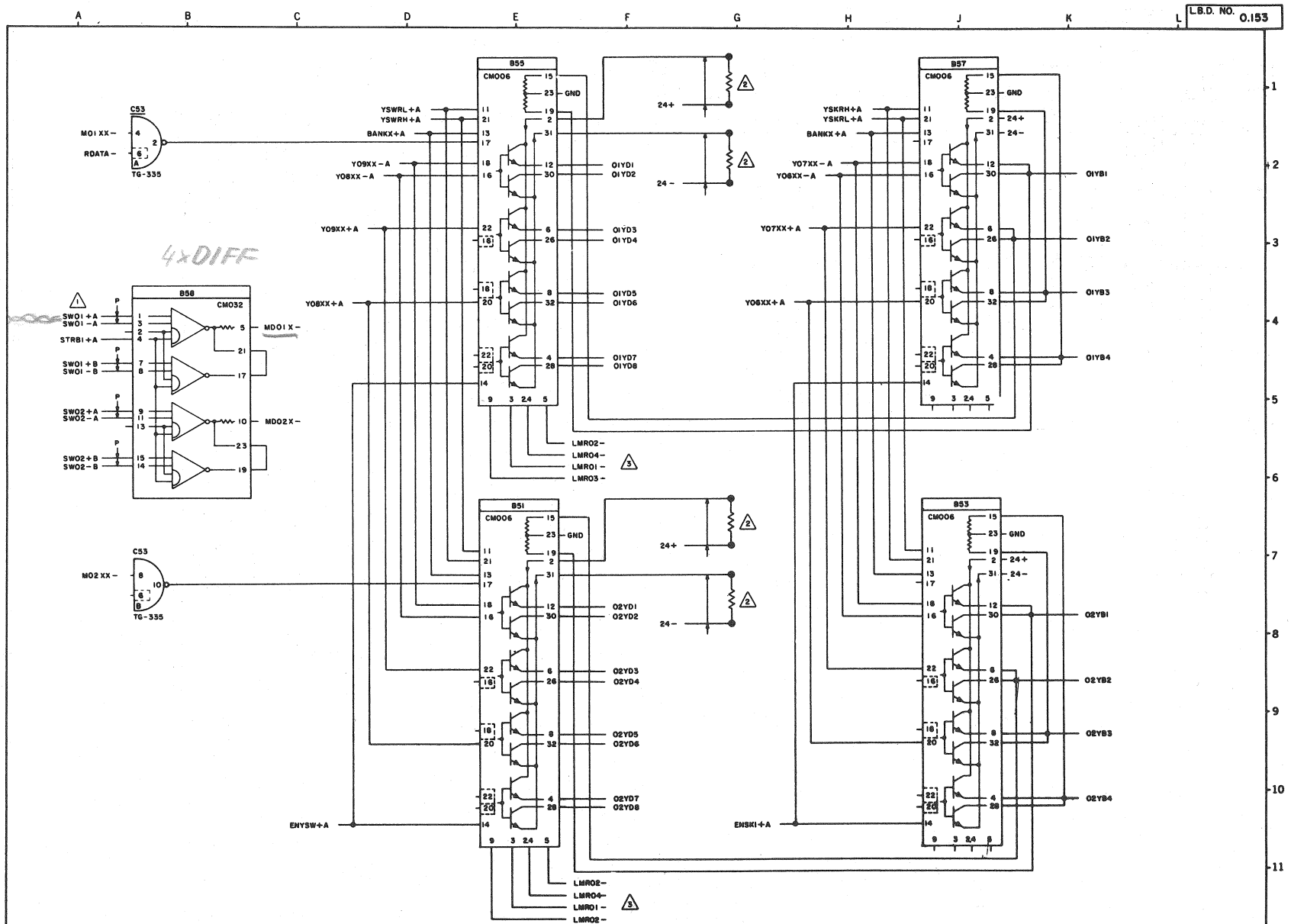

1 FOR 4096 WORD MEMORY CM033 REPLACES CM032

2 5 WATT RESISTOR (MOUNTED ON RESISTOR PLATE)

3 $\frac{1}{4}$ WATT RESISTOR (MOUNTED ON BACK PLANE)

REV	REVISIONS	CHK
A	S.R. 64-1264	

COMPUTER CONTROL COMPANY, INC.
FRAMINGHAM MASS. / LOS ANGELES 64, CALIF

DR. A. KURTZER	DATE 8/4/66
ENG. R.W. FLETCHER	8/11/66
APPR. [illegible]	8/17/66
PROJECT NO. 55217	

TITLE
DATA CHANNEL
BITS 1 AND 2

SIZE	DWG NO.	REV.
C	015418	A

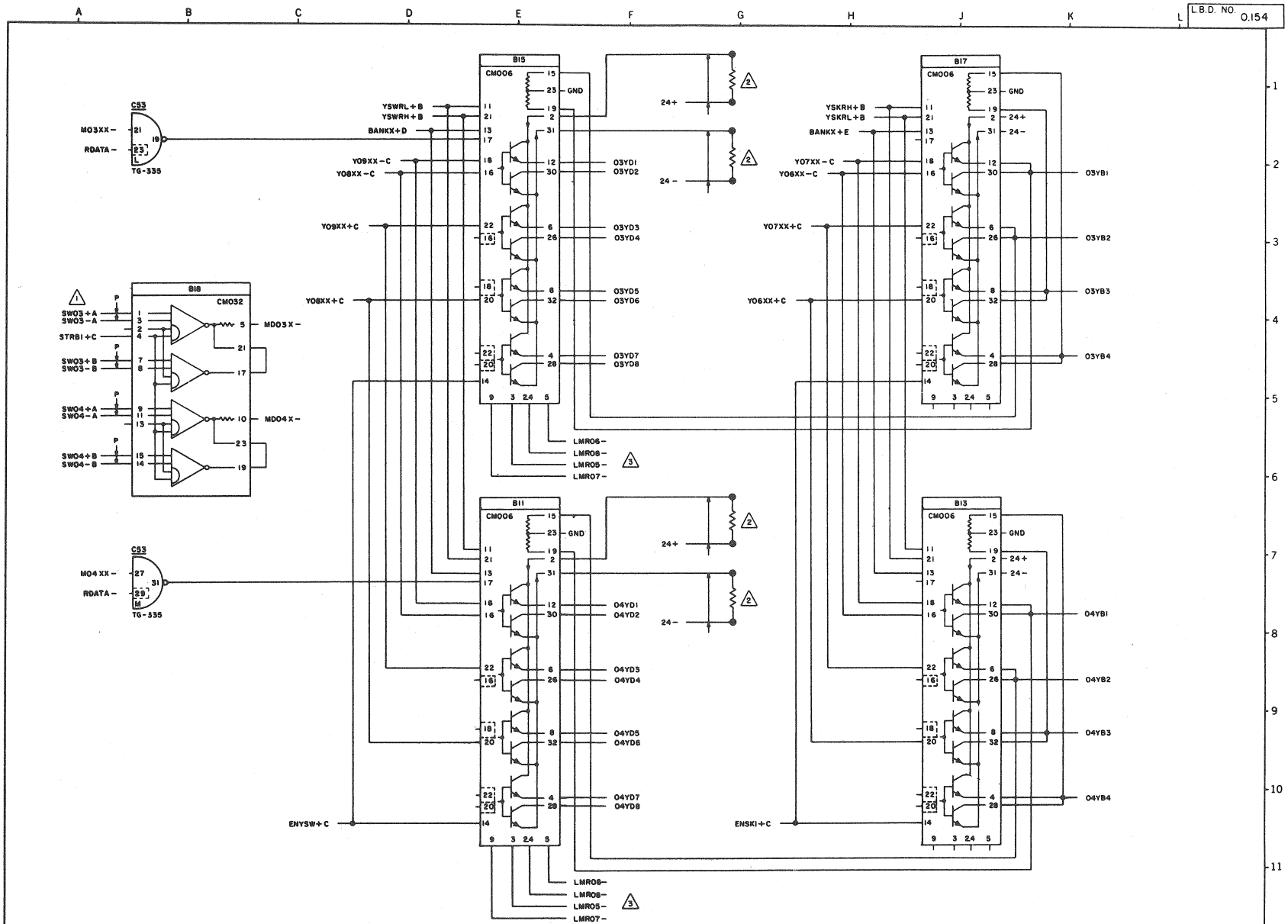

1. FOR 4096 WORD MEMORY CM033 REPLACES CM032
2. 5 WATT RESISTOR (MOUNTED ON RESISTOR PLATE)
3. 1/4 WATT RESISTOR (MOUNTED ON BACK PLANE)

REVISIONS	REV.
S.R. 64-1264	A

COMPUTER CONTROL COMPANY, INC.
FRAMINGHAM MASS LOS ANGELES 64 CALIF

DR. A. KURTZER	DATE 8/4/66
ENG. R. W. FLETCHER	8/11/66
APP.	8/7/66
PROJECT NO. 55217	

TITLE
DATA CHANNEL
BITS 3 AND 4

SIZE	DWG NO.	REV.
C	015419	A

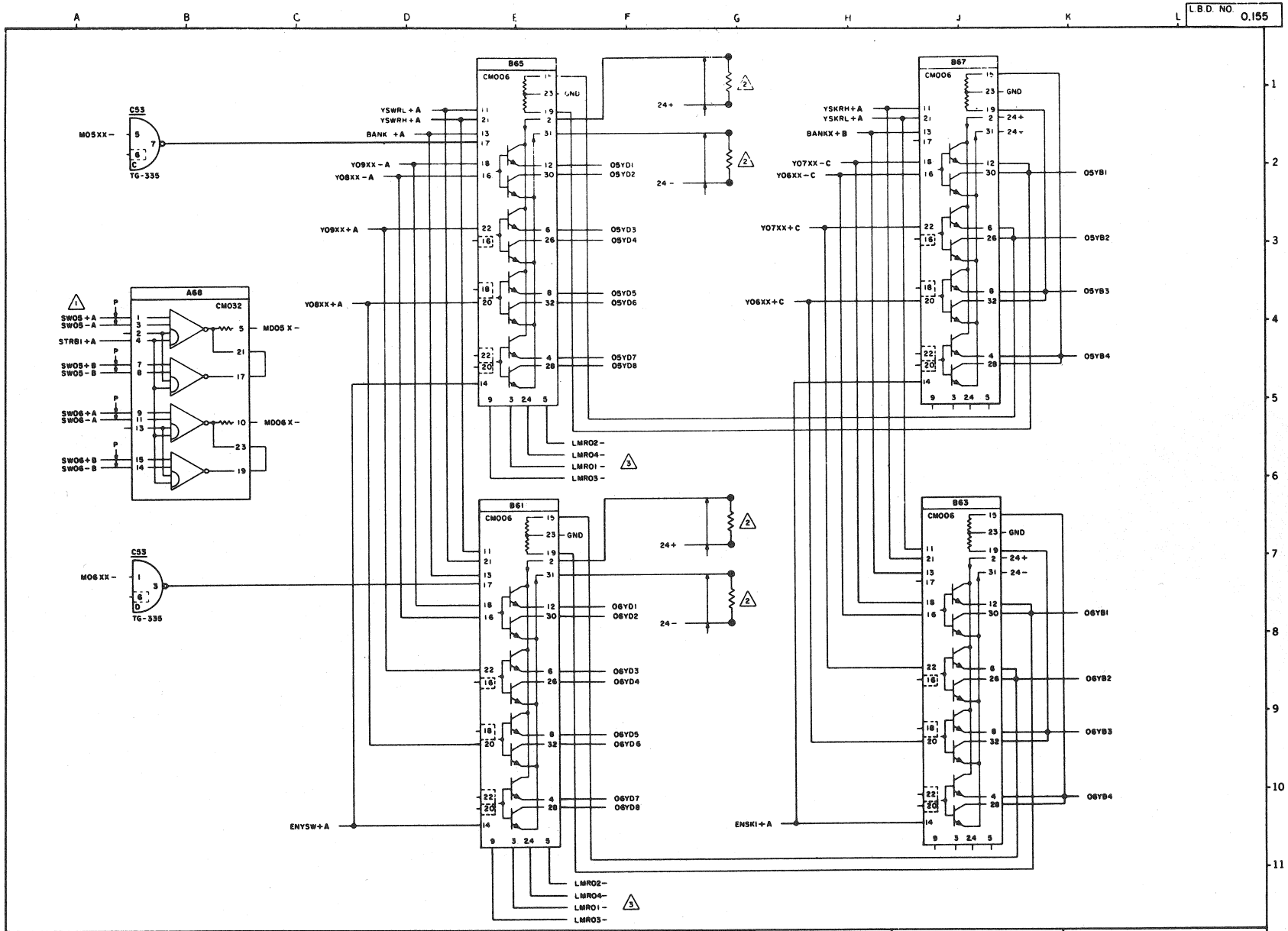
L.B.D. NO. 0.155
A
B
C
D
E
F
G
H
J
K
L
1
2
3
4
5
6
7
8
9
10
11
C53
MO5XX-
TG-335
B65
CMOO6
YSWRL+A
YSWRH+A
BANK +A
YO9XX-A
YO8XX-A
YO9XX+A
YO8XX+A
05YD1
05YD2
05YD3
05YD4
05YD5
05YD6
05YD7
05YD8
24+
24-
LMRO2-
LMRO4-
LMRO1-
LMRO3-
B67
YSKRH+A
YSKRL+A
BANKX+B
YO7XX-C
YO6XX-C
YO7XX+C
YO6XX+C
05YB1
05YB2
05YB3
05YB4
A68
CM032
SWO5+A
SWO5-A
STRBI+A
SWO5+B
SWO5-B
SWO6+A
SWO6-A
SWO6+B
SWO6-B
MDO5X-
MDO6X-
C53
MO6XX-
TG-335
B61
CMOO6
06YD1
06YD2
06YD3
06YD4
06YD5
06YD6
06YD7
06YD8
ENYSW+A
B63
CMOO6
06YB1
06YB2
06YB3
06YB4
ENSKI+A
GND
1 FOR 4096 WORD MEMORY CM033 REPLACES CM032
2 5 WATT RESISTOR (MOUNTED ON RESISTOR PLATE)
3 1/4 WATT RESISTOR (MOUNTED ON BACK PLANE)
REVISIONS
S.R. 64-1264
COMPUTER CONTROL COMPANY, INC
FRAMINGHAM MASS LOS ANGELES 64 CALIF
DR. A. KURTZER
DATE 8/4/66
ENG.
APP
PROJECT NO. 55217
TITLE
DATA CHANNEL
BITS 5 AND 6
SIZE C
DWG NO. 015420
REV.

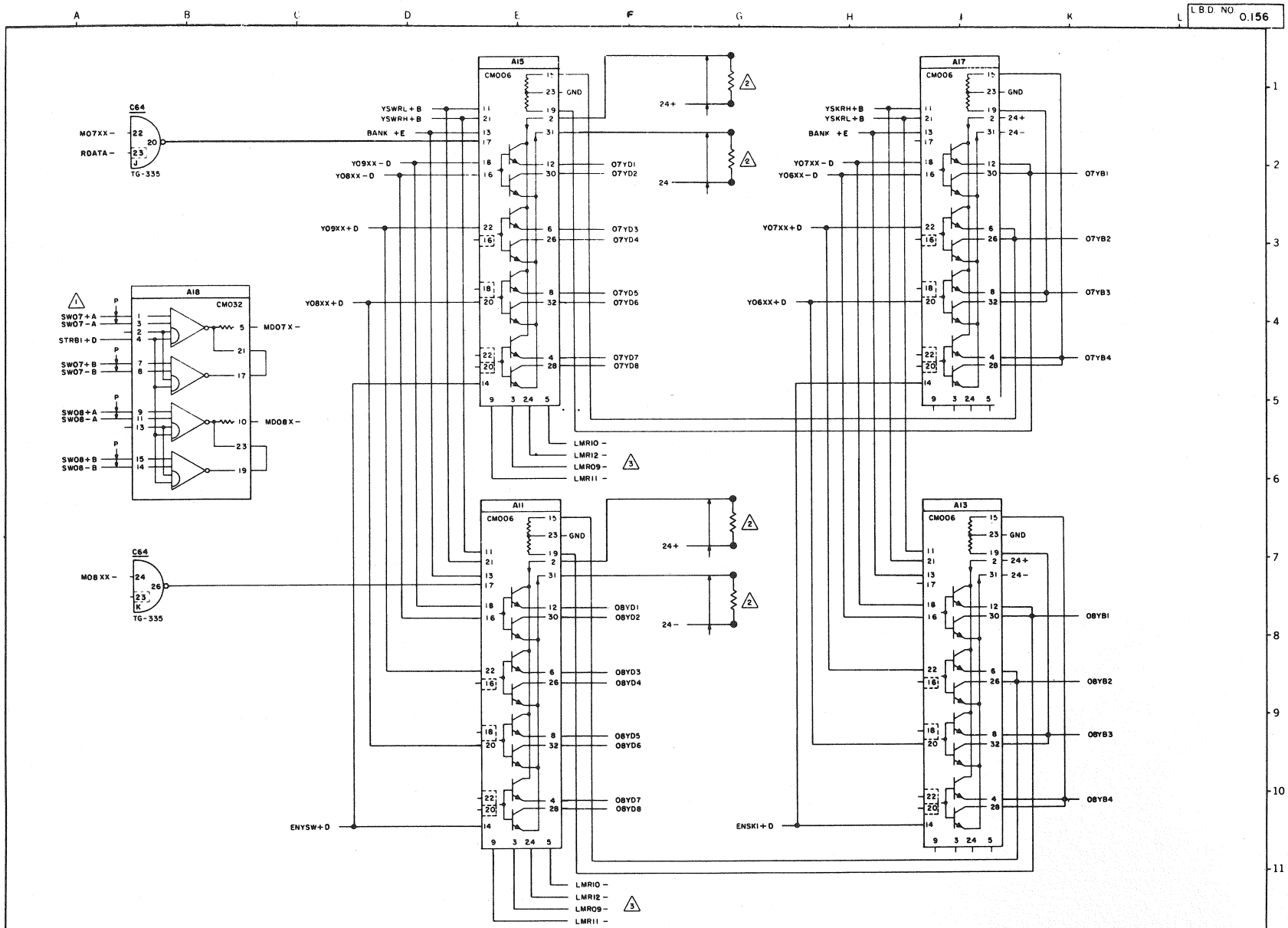

1. FOR 4096 WORD MEMORY CM033 REPLACES CM032
2. 5 WATT RESISTOR (MOUNTED ON RESISTOR PLATE)
3. 1/4 WATT RESISTOR (MOUNTED ON BACK PLANE)

REVISIONS		
LTR	S.R. 64-1264	A

COMPUTER CONTROL COMPANY, INC
FRAMINGHAM MASS LOS ANGELES 64 CALIF

DR. A. KURTZER	DATE 8/4/65
ENG.	
APP.	
PROJECT NO. 55217	

TITLE
DATA CHANNEL
BITS 7 AND 8

SIZE	DWG NO.	REV.
C	015421	A

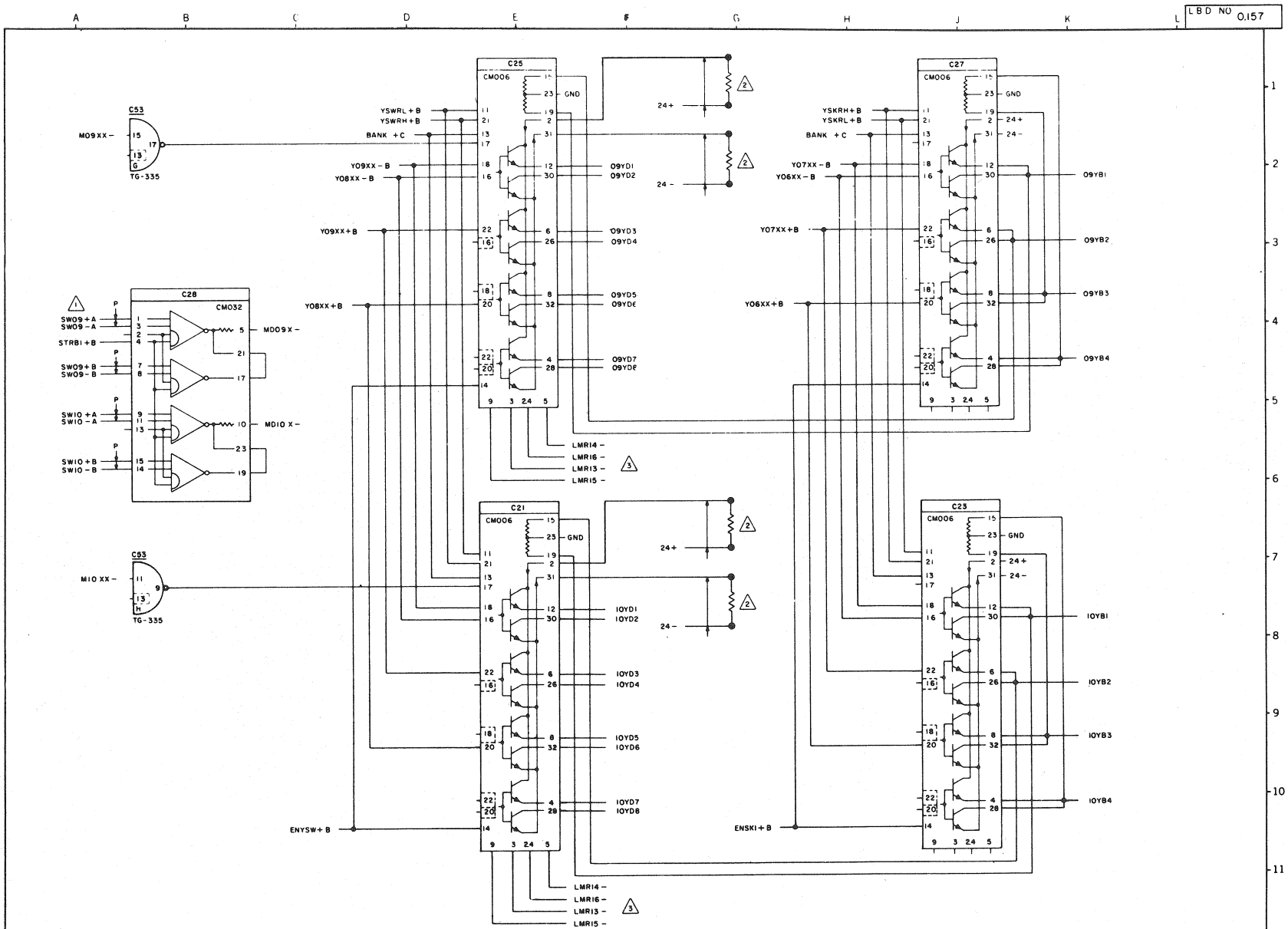

1. FOR 4096 WORD MEMORY CMO33 REPLACES CMO32
2. 5 WATT RESISTOR (MOUNTED ON RESISTOR PLATE)
3. 1/4 WATT RESISTOR (MOUNTED ON BACK PLANE)

REVISIONS		
	S.R. 64-1264	A

COMPUTER CONTROL COMPANY, INC
FRAMINGHAM, MASS. LOS ANGELES 64 CALIF.

DR	A. KURTZER	DATE 8/4/66
ENG		
APPR		

PROJECT NO. 55217

TITLE
DATA CHANNEL
BITS 9 AND 10

SIZE	DWG NO.	REV.
C	015422	1

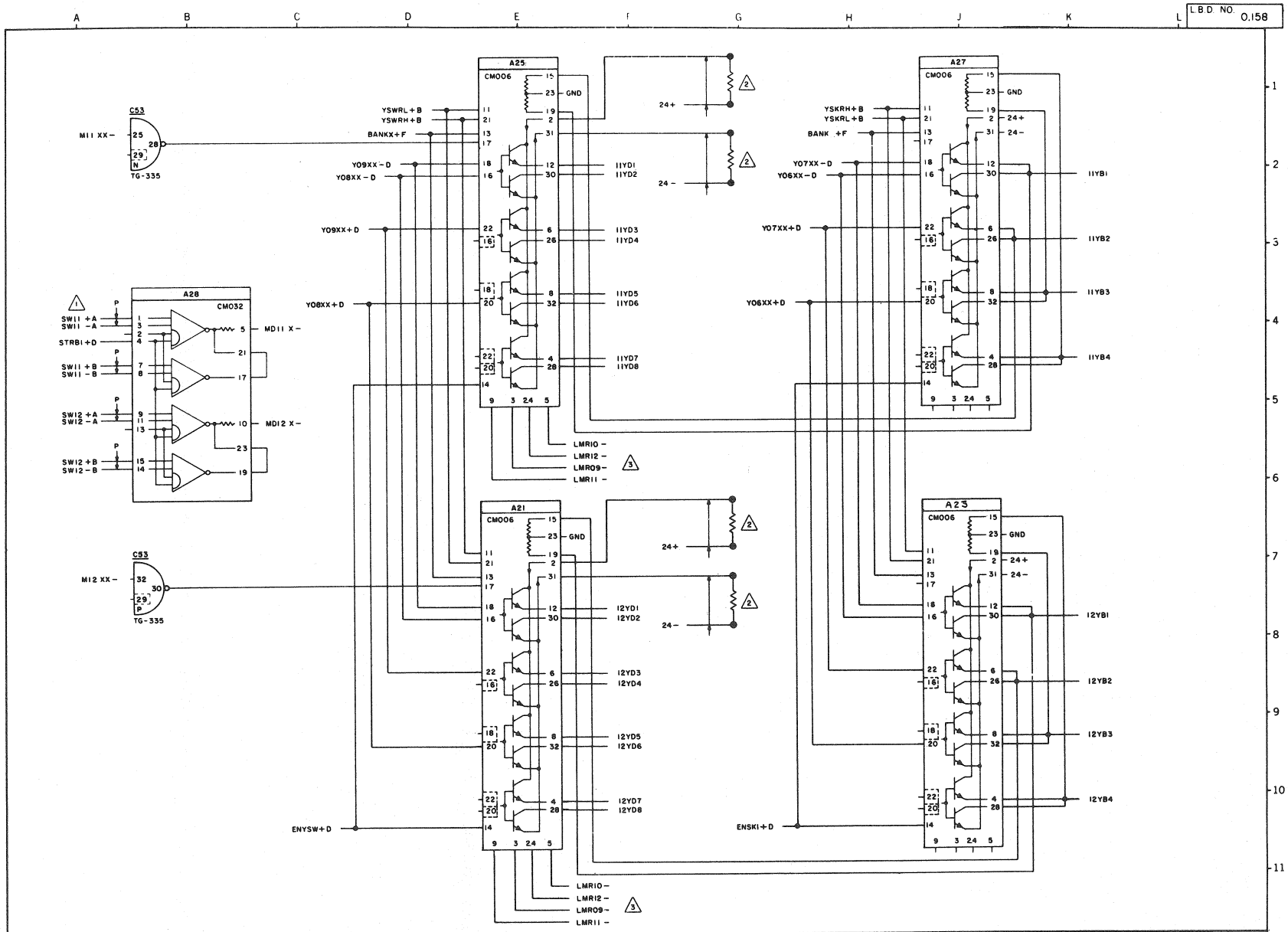

1. FOR 4096 WORD MEMORY CM033 REPLACES CM032
2. 5 WATT RESISTOR (MOUNTED ON RESISTOR PLATE)
3. 1/4 WATT RESISTOR (MOUNTED ON BACK PLANE)

REVISIONS	BY	DATE
S.R. 64-1264	A	

COMPUTER CONTROL COMPANY, INC
FRAMINGHAM MASS LOS ANGELES 64 CALIF

DR.	A. KURTZER	DATE 8/4/66
ENG.		
APP.		
PROJECT NO.	65217	

TITLE
DATA CHANNEL
BITS 11 AND 12

SIZE	DWG NO.	REV.
C	015423	H

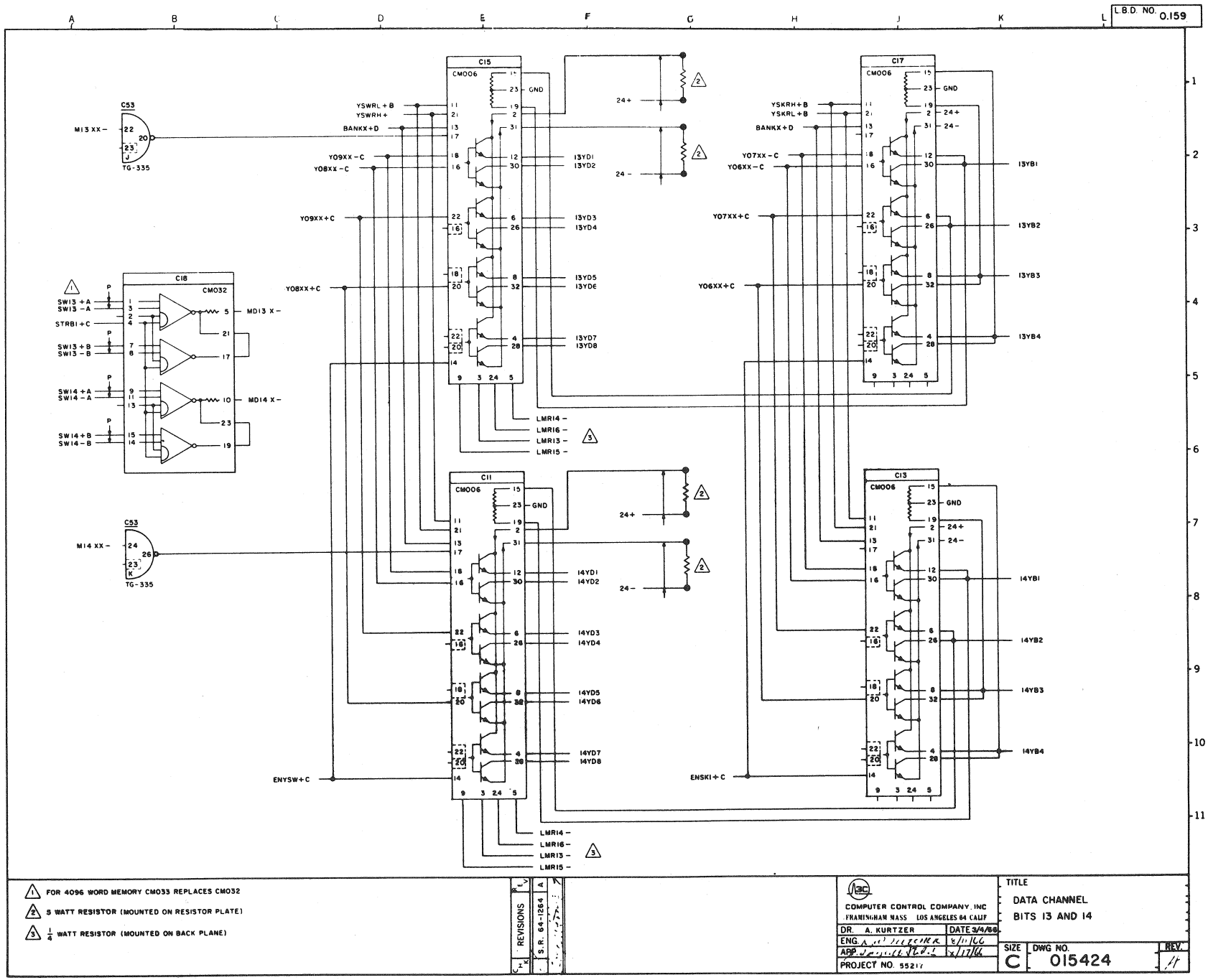
L.B.D. NO. 0.159
C15
CM006
C17
CM006
C18
CM032
C11
CM006
C13
CM006
C53
TG-335
M13 XX-
M14 XX-
YSWRL+B
YSWRH+
BANKX+D
Y09XX-C
Y08XX-C
Y09XX+C
Y08XX+C
YSKRH+B
YSKRL+B
Y07XX-C
Y06XX-C
Y07XX+C
Y06XX+C
ENYSW+C
ENSKI+C
GND
24+
24-
13YD1
13YD2
13YD3
13YD4
13YD5
13YD6
13YD7
13YD8
13YB1
13YB2
13YB3
13YB4
14YD1
14YD2
14YD3
14YD4
14YD5
14YD6
14YD7
14YD8
14YB1
14YB2
14YB3
14YB4
LMR14-
LMR16-
LMR13-
LMR15-
SW13+A
SW13-A
STRB1+C
SW13+B
SW13-B
SW14+A
SW14-A
SW14+B
SW14-B
MD13 X-
MD14 X-
1 FOR 4096 WORD MEMORY CM033 REPLACES CM032
2 5 WATT RESISTOR (MOUNTED ON RESISTOR PLATE)
3 1/4 WATT RESISTOR (MOUNTED ON BACK PLANE)
REVISIONS
S.R. 64-1264
COMPUTER CONTROL COMPANY, INC
FRAMINGHAM MASS LOS ANGELES 64 CALIF
DR. A. KURTZER
DATE 3/4/66
ENG.
APP.
PROJECT NO. 55217
TITLE
DATA CHANNEL
BITS 13 AND 14
SIZE C
DWG NO. 015424
REV.

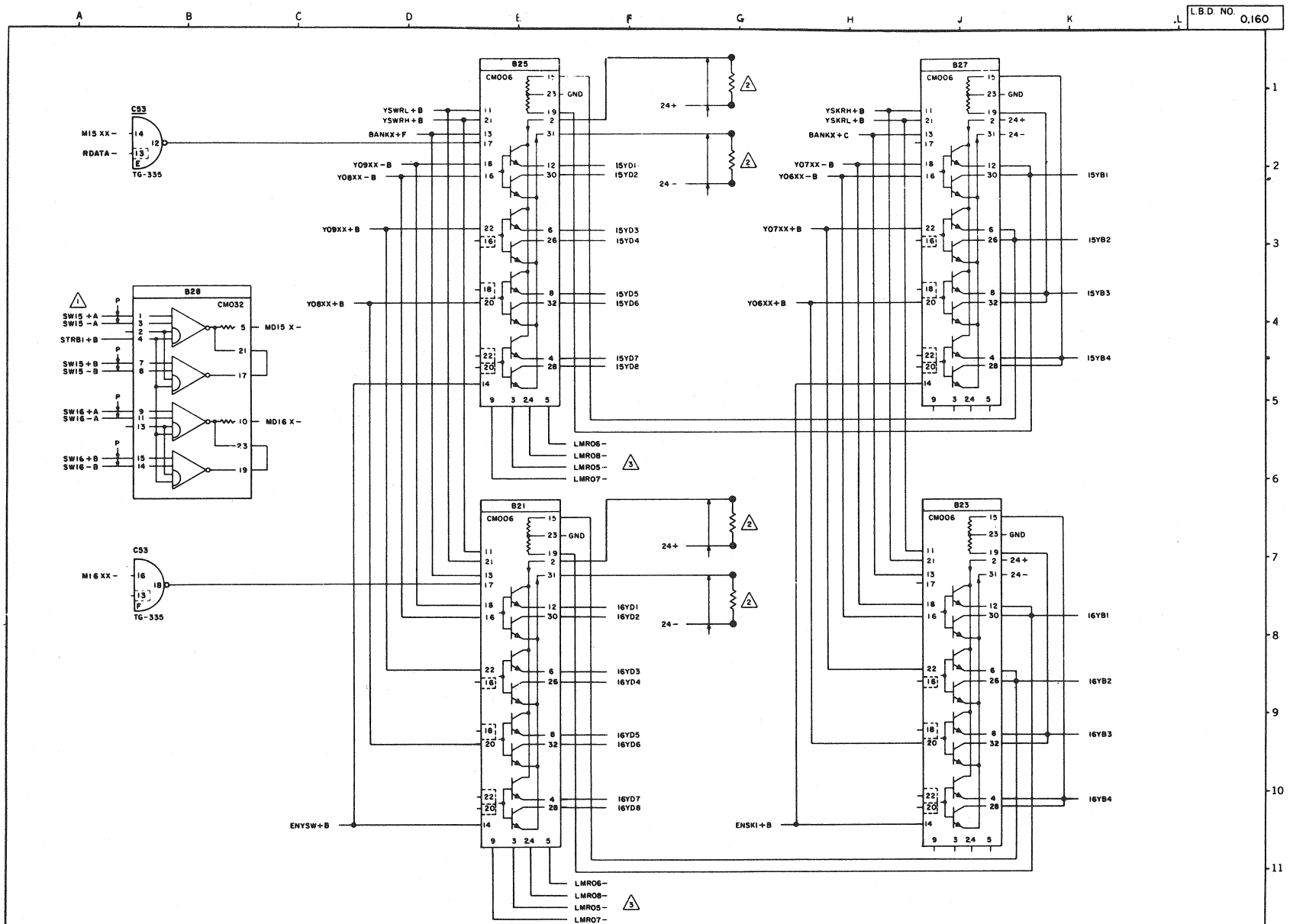

1. FOR 4096 WORD MEMORY CMO33 REPLACES CMO32
2. 5 WATT RESISTOR (MOUNTED ON RESISTOR PLATE)
3. 1/4 WATT RESISTOR (MOUNTED ON BACK PLANE)

REVISIONS

REV	S.R. 64-1264
A	

COMPUTER CONTROL COMPANY, INC
FRAMINGHAM MASS LOS ANGELES 64 CALIF

DR.	A. KURTZER	DATE 8/4/66
ENG.	R.W. FLETCHER	8/11/66
APP.	[illegible]	8/17/66

PROJECT NO. 55217

TITLE
DATA CHANNEL
BITS 15 AND 16

SIZE	DWG NO.	REV.
C	015425	A

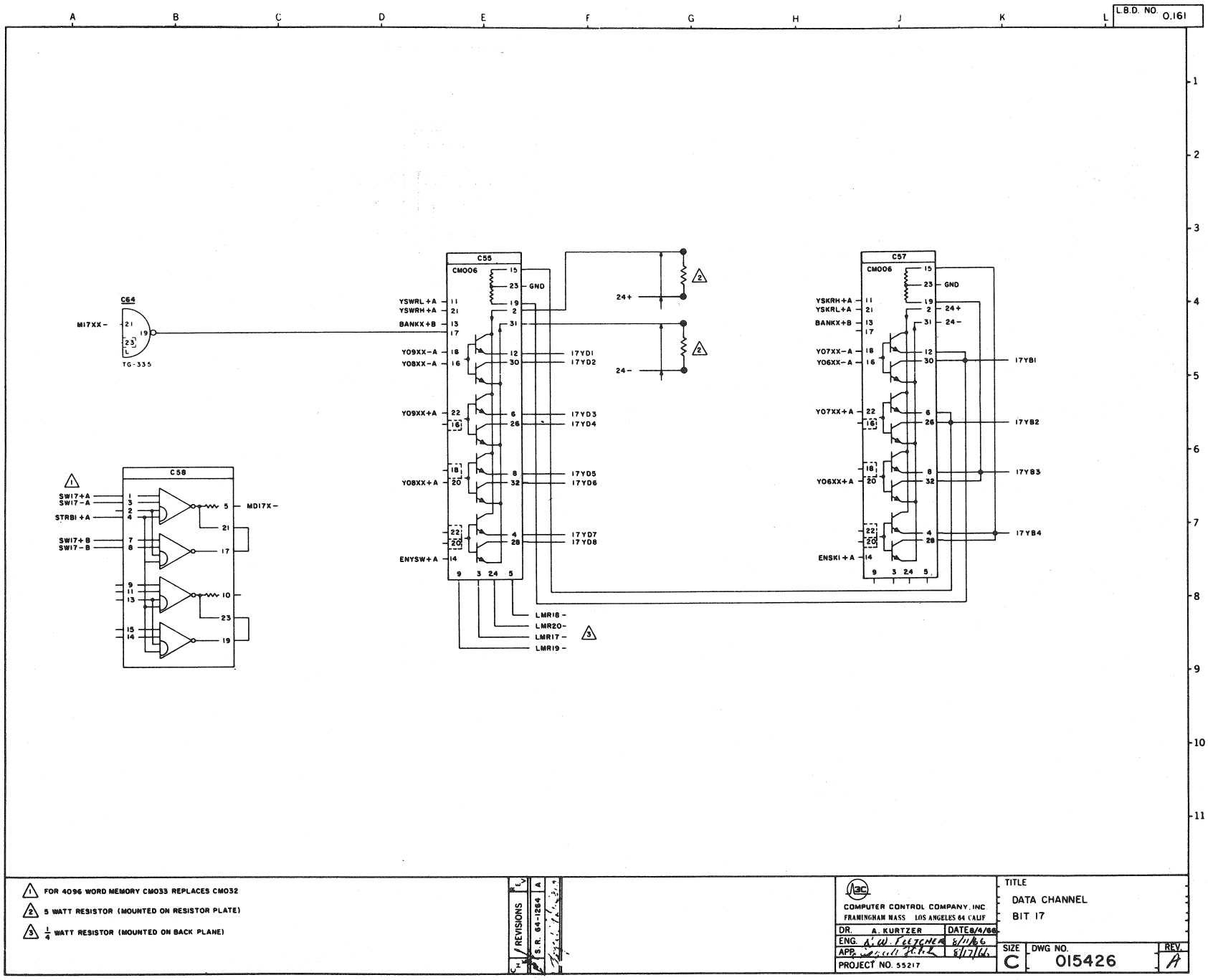
L.B.D. NO. 0.161
C64
MI7XX-
TG-335
C55
CM006
YSWRL+A
YSWRH+A
BANKX+B
YO9XX-A
YO8XX-A
YO9XX+A
YO8XX+A
ENYSW+A
GND
17YD1
17YD2
17YD3
17YD4
17YD5
17YD6
17YD7
17YD8
LMRI8-
LMR20-
LMRI7-
LMRI9-
24+
24-
C57
YSKRH+A
YSKRL+A
BANKX+B
YO7XX-A
YO6XX-A
YO7XX+A
YO6XX+A
ENSKI+A
17YB1
17YB2
17YB3
17YB4
C58
SWI7+A
SWI7-A
STRBI+A
SWI7+B
SWI7-B
MDI7X-
FOR 4096 WORD MEMORY CM033 REPLACES CM032
5 WATT RESISTOR (MOUNTED ON RESISTOR PLATE)
1/4 WATT RESISTOR (MOUNTED ON BACK PLANE)
REVISIONS
S.R. 64-1284
COMPUTER CONTROL COMPANY, INC
FRAMINGHAM MASS LOS ANGELES 64 CALIF
DR. A. KURTZER DATE 8/4/66
ENG. A.W. FLETCHER 8/11/66
APP. 8/17/66
PROJECT NO. 55217
TITLE
DATA CHANNEL
BIT 17
SIZE C
DWG NO. 015426
REV. A

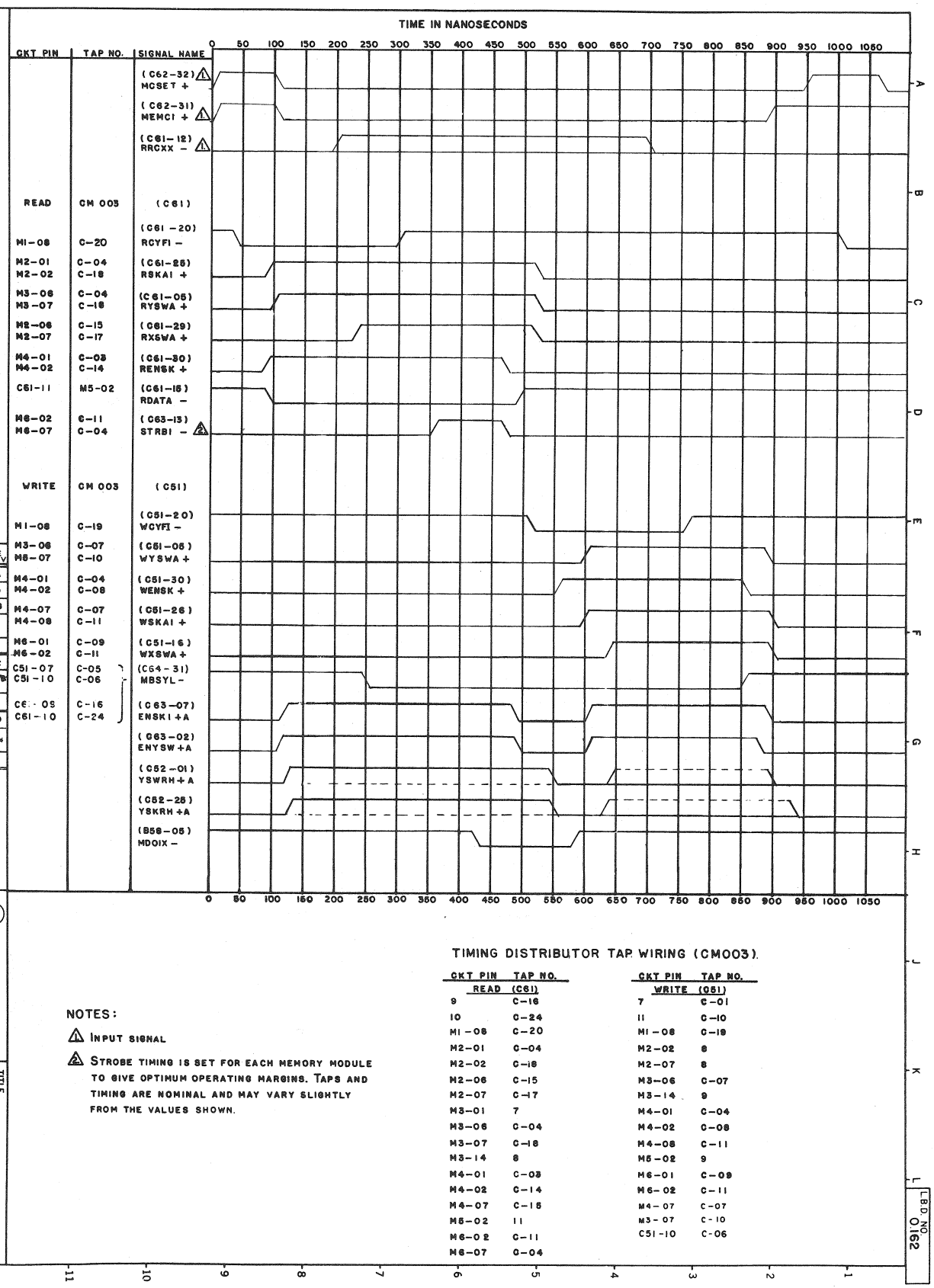

CH	REVISIONS	REV
	S.R. 64-1264	A
	ECO 4350	B
	EXT. CHANGES 4/25/67	
	ECO 4621	C
	EXT. CHANGES SEE ECO 7/7/67	
	ECO 5170	D
	EXT CHANGES SEE ECO 5170	

NOTES:

1. INPUT SIGNAL
2. STROBE TIMING IS SET FOR EACH MEMORY MODULE TO GIVE OPTIMUM OPERATING MARGINS. TAPS AND TIMING ARE NOMINAL AND MAY VARY SLIGHTLY FROM THE VALUES SHOWN.

TIMING DISTRIBUTOR TAP WIRING (CM003).

CKT PIN	TAP NO.	CKT PIN	TAP NO.
READ	(C61)	WRITE	(C51)
9	C-16	7	C-01
10	C-24	11	C-10
M1-08	C-20	M1-08	C-19
M2-01	C-04	M2-02	8
M2-02	C-18	M2-07	8
M2-06	C-15	M3-06	C-07
M2-07	C-17	M3-14	9
M3-01	7	M4-01	C-04
M3-06	C-04	M4-02	C-08
M3-07	C-18	M4-08	C-11
M3-14	8	M5-02	9
M4-01	C-03	M6-01	C-09
M4-02	C-14	M6-02	C-11
M4-07	C-15	M4-07	C-07
M5-02	11	M3-07	C-10
M6-02	C-11	C51-10	C-06
M6-07	C-04		

COMPUTER CONTROL COMPANY, INC.
FRAMINGHAM MASS / LOS ANGELES 64 CALIF

DR. R.L. BOUDROT DATE 8/8
ENG. R.W. FLETCHER 8/11/66
APP. 8/17/66
PROJECT NO. 55217

TITLE
TIMING DIAGRAM
MEMORY

SIZE C DWG NO. 015427 REV. D

L.B.D. NO. 0.162

L.B.D. NO. 0.199

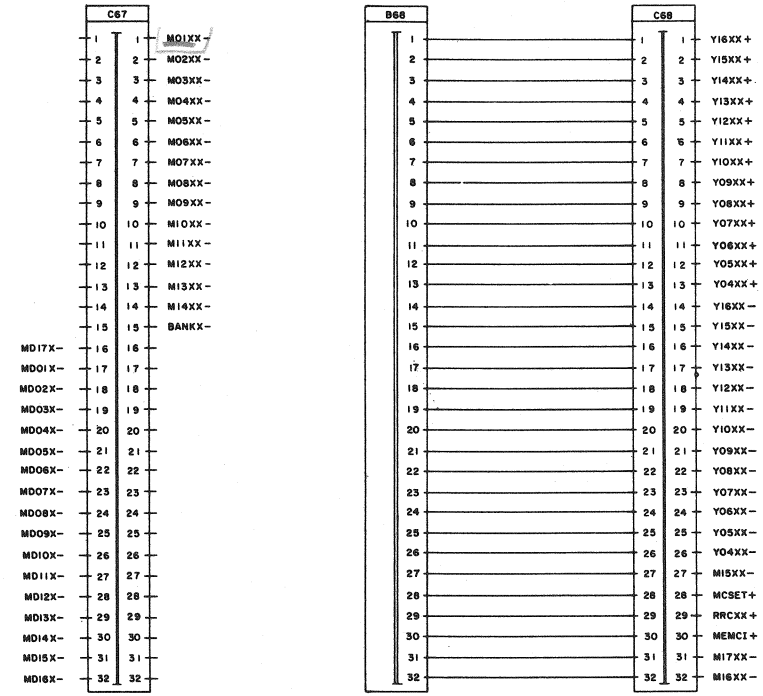

REVISIONS
S.R. 64-1284 A

COMPUTER CONTROL COMPANY, INC.
FRAMINGHAM MASS. / LOS ANGELES 64 CALIF.

DR.	A. KURTZER	DATE 6/4/66
ENG.	[illegible]	6/11/66
APP.	[illegible]	6/17/66
PROJECT NO.	55217	

TITLE
MEMORY I/O CABLES

SIZE	DWG NO.	REV.
C	015428	A

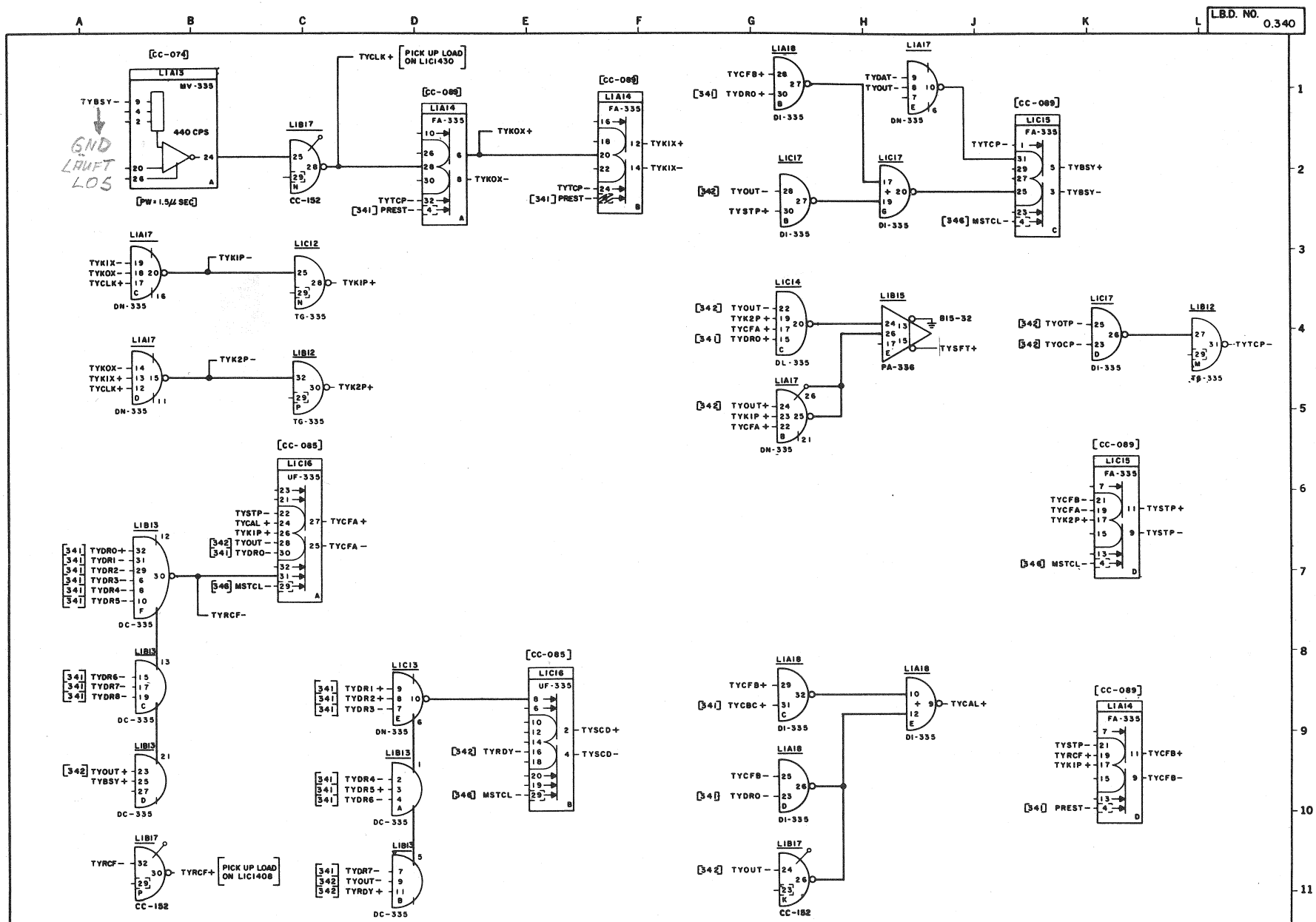

CHK.	REVISIONS	REV.
	ECO 3718 REDRAWN A.K.	B
	ECO 3990 EXT. CHANGES 1/27/67	C
	ECO 4084 EXT. CHANGES SEE ECO 7/7/67	D
	ECO 5058 EXT. CHANGES SEE ECO 9/19/67	E
	ECO 5908 EXT. CHANGES SEE ECO 8/16/68	F

HONEYWELL INC.
COMPUTER CONTROL DIVISION
Old Connecticut Path, Framingham, Mass.

DR.	J. Thaxter	DATE 9/27/66
ENG.	J. Thaxter	9/27/66
APP.	J. Thaxter	9/27/66
PROJECT NO.	55242	

TITLE
CONTROL
ASR 33/35
DDP-516-56

SIZE C | DWG NO. 015859 | REV. F

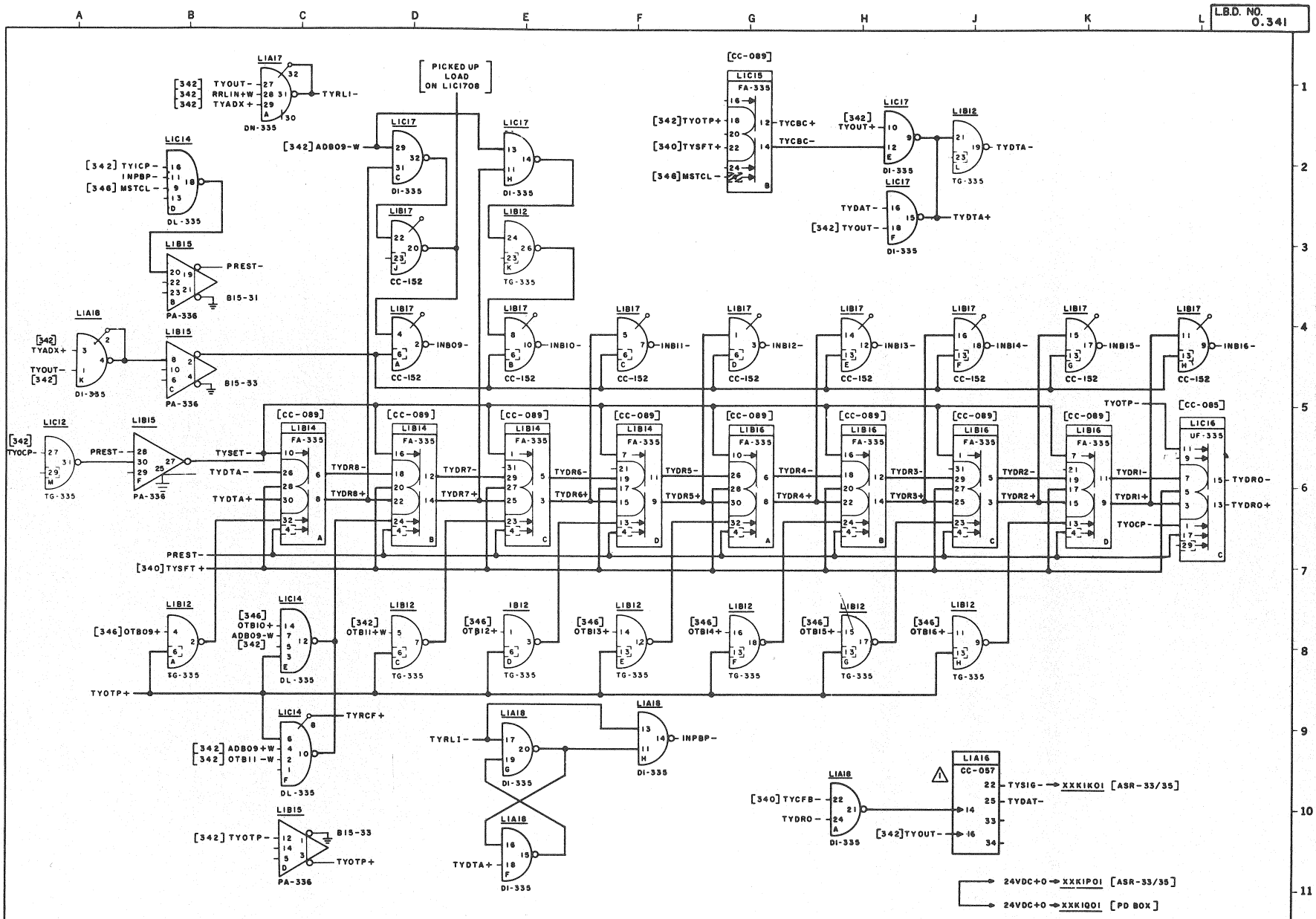

NOTE:

⚠1 - THE FUNCTION OF THE CC-057 INTERFACE CIRCUIT IS AS FOLLOWS:

(A) INPUT MODE; WHEN THE LINE (TYSIG-) IS MARKING, THE OUTPUT (TYDAT-) S TRUE. WHEN THE LINE IS SPACING, THE OUTPUT IS FALSE.

(B) OUTPUT MODE; THE LINE IS MARKING WHEN EITHER INPUT (PIN 14 OR 16) IS A LOGIC "1" AND IS SPACING IF BOTH INPUTS ARE A LOGIC "0". SPACING IS DEFINED AS A +24VDC LEVEL, AND MARKING AS A 0 VOLT LEVEL.

REV.	REVISIONS	CHK.
B	ECO 3718	
C	ECO 3980 EXT. CHANGES 1/27/67	
D	ECO 4084	
E	ECO 5058 EXT. CHANGES SEE ECO 7/7/67 EXT. CHANGES SEE ECO 9/19/67	
F	ECO 5906 EXT. CHANGES SEE ECO 6/14/68	

HONEYWELL INC.
COMPUTER CONTROL DIVISION
Old Connecticut Path, Framingham, Mass.

DR.	J. Thaxter	DATE 9/27/66
ENG.	J. Thaxter	9/27/66
APP.	J. Thaxter	9/27/66
PROJECT NO.	55242	

TITLE
BUFFER REGISTER
ASR 33/35
DDP-516-56

SIZE C | DWG NO. 015860 | REV. F

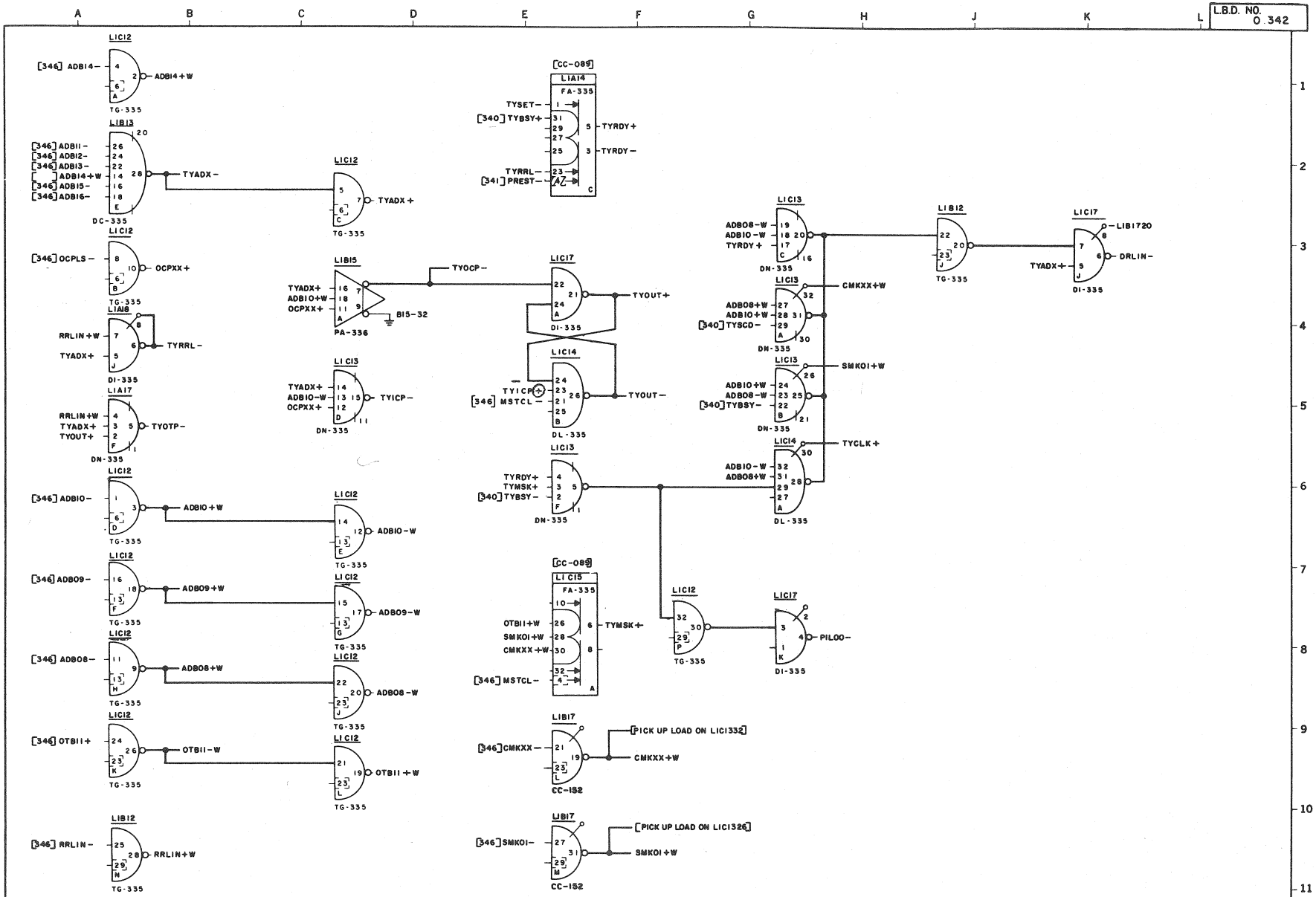

REV.	REVISIONS	CHK
B	ECO 3718 REDRAWN F.D.	
C	ECO 3990 EX: CHANGES /27/67	
D	ECO 4084 EXT. CHANGES SEE ECO 7/7/67	
E	ECO 8858 EXT. CHANGES SEE ECO 9/10/67	
F	ECO 5906 EXT. CHANGES SEE ECO 8/14/68	

HONEYWELL INC.
COMPUTER CONTROL DIVISION
Old Connecticut Path, Framingham, Mass.

DR.	S. THAKTER	DATE 9/27/66
ENG.	S. THAKTER	9/27/66
APP.	S. THAKTER	9/27/66
PROJECT NO.	55242	

TITLE
ADDRESS AND SKS
ASR 33/35
DDP-516-56

SIZE C | DWG NO. 015858 | REV. F

L.B.D. NO. 0.345

LOC	PAC	A	B	C	D	E	F	G	H	J	K	L	M	N	P
8															
7															
6															
5															
4															
3															
2															
1															

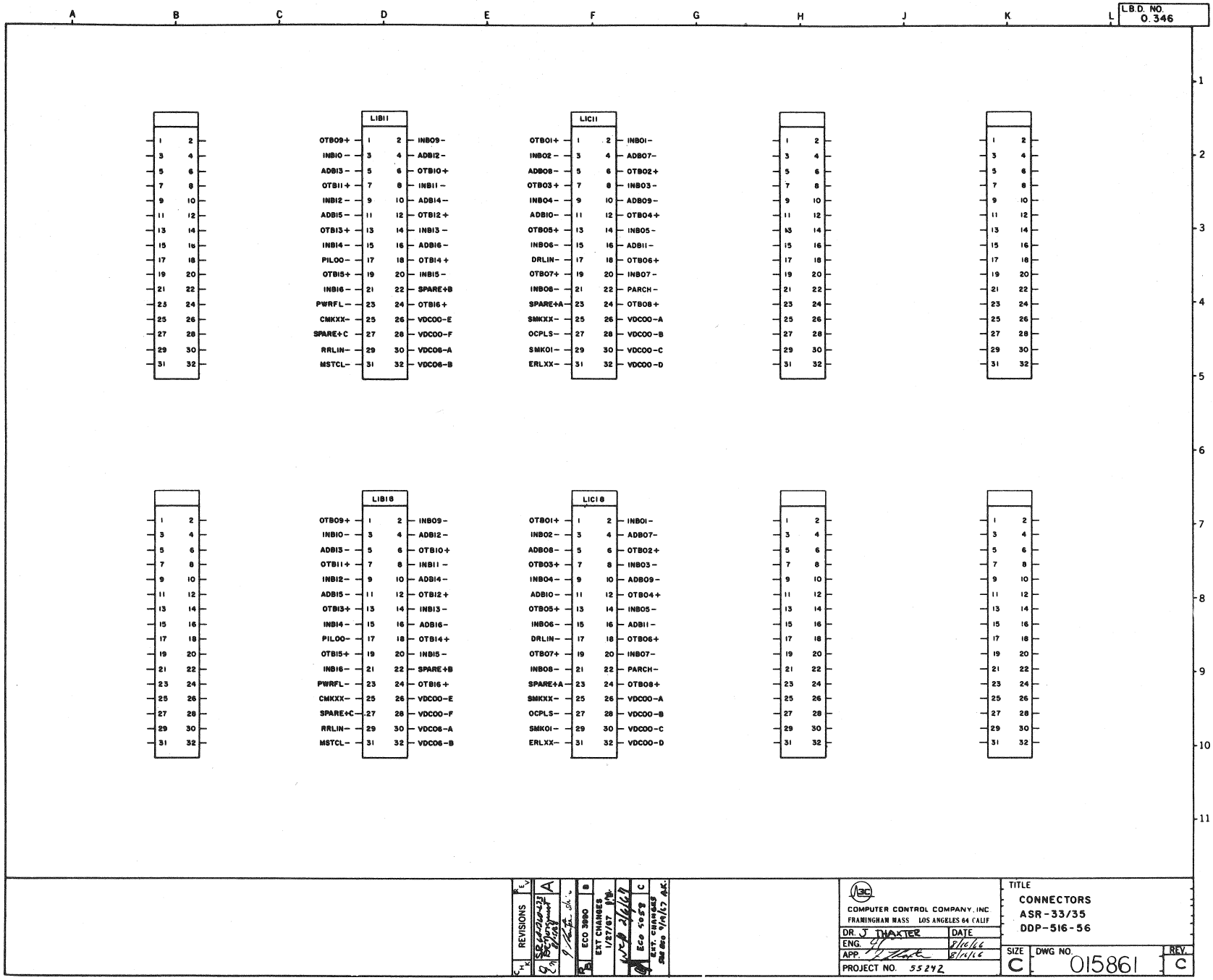
L.B.D. NO. 0.346
LIB11
OTB09+ 1 2 INB09-
INB10- 3 4 ADB12-
ADB13- 5 6 OTB10+
OTB11+ 7 8 INB11-
INB12- 9 10 ADB14-
ADB15- 11 12 OTB12+
OTB13+ 13 14 INB13-
INB14- 15 16 ADB16-
PILOO- 17 18 OTB14+
OTB15+ 19 20 INB15-
INB16- 21 22 SPARE+B
PWRFL- 23 24 OTB16+
CMKXX- 25 26 VDCOO-E
SPARE+C 27 28 VDCOO-F
RRLIN- 29 30 VDCO6-A
MSTCL- 31 32 VDCO6-B
LIC11
OTB01+ 1 2 INB01-
INB02- 3 4 ADB07-
ADB08- 5 6 OTB02+
OTB03+ 7 8 INB03-
INB04- 9 10 ADB09-
ADB10- 11 12 OTB04+
OTB05+ 13 14 INB05-
INB06- 15 16 ADB11-
DRLIN- 17 18 OTB06+
OTB07+ 19 20 INB07-
INB08- 21 22 PARCH-
SPARE+A 23 24 OTB08+
SMKXX- 25 26 VDCOO-A
OCPLS- 27 28 VDCOO-B
SMKOI- 29 30 VDCOO-C
ERLXX- 31 32 VDCOO-D
LIB18
OTB09+ 1 2 INB09-
INB10- 3 4 ADB12-
ADB13- 5 6 OTB10+
OTB11+ 7 8 INB11-
INB12- 9 10 ADB14-
ADB15- 11 12 OTB12+
OTB13+ 13 14 INB13-
INB14- 15 16 ADB16-
PILOO- 17 18 OTB14+
OTB15+ 19 20 INB15-
INB16- 21 22 SPARE+B
PWRFL- 23 24 OTB16+
CMKXX- 25 26 VDCOO-E
SPARE+C 27 28 VDCOO-F
RRLIN- 29 30 VDCO6-A
MSTCL- 31 32 VDCO6-B
LIC18
OTB01+ 1 2 INB01-
INB02- 3 4 ADB07-
ADB08- 5 6 OTB02+
OTB03+ 7 8 INB03-
INB04- 9 10 ADB09-
ADB10- 11 12 OTB04+
OTB05+ 13 14 INB05-
INB06- 15 16 ADB11-
DRLIN- 17 18 OTB06+
OTB07+ 19 20 INB07-
INB08- 21 22 PARCH-
SPARE+A 23 24 OTB08+
SMKXX- 25 26 VDCOO-A
OCPLS- 27 28 VDCOO-B
SMKOI- 29 30 VDCOO-C
ERLXX- 31 32 VDCOO-D
REVISIONS
ECO 3990
EXT CHANGES 1/27/67
ECO 5058
EXT. CHANGES
COMPUTER CONTROL COMPANY, INC.
FRAMINGHAM MASS LOS ANGELES 64 CALIF
DR. J THAXTER
DATE
ENG.
APP.
PROJECT NO. 55242
TITLE
CONNECTORS
ASR-33/35
DDP-516-56
SIZE C
DWG NO. 015861
REV. C

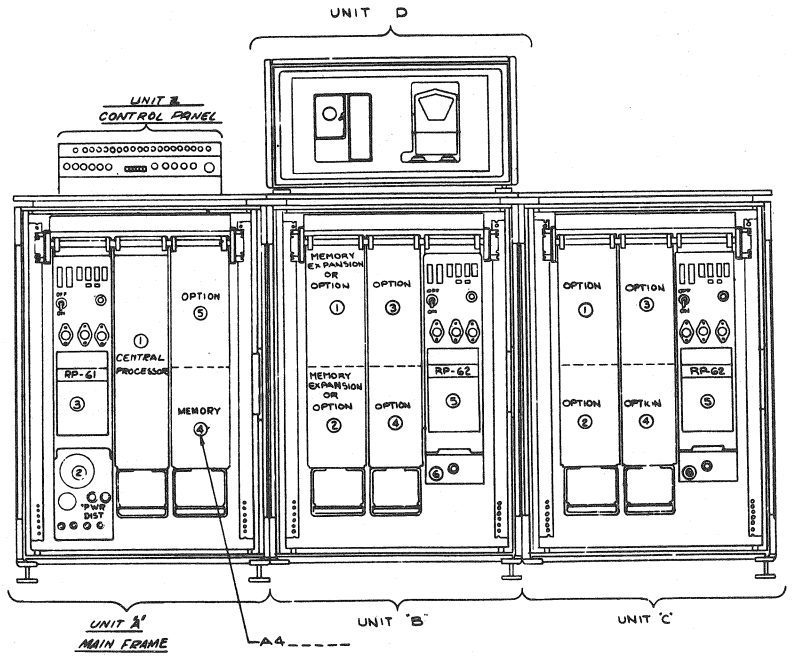

REVISIONS				
REV	DESCRIPTION	DFTG	APP BY	DATE
C	PER DRAWING / ECO 3467	RM	[illegible]	[illegible]
D	ADDED VIEW, CONTROLLED BY SHEET 10, & RE-DP SHT 5 PER ECO 3837	[illegible]	[illegible]	[illegible]
E	EXTENSIVE CHG'S PER ECO 3643.	[illegible]	[illegible]	[illegible]
F	EXTENSIVE CHG'S / ECO 3647.	[illegible]	[illegible]	[illegible]
G	EXTENSIVE CHG'S / ECO 3700.	[illegible]	[illegible]	[illegible]
H	EXTENSIVE CHG'S / ECO 3732	[illegible]	[illegible]	[illegible]
I	EXTENSIVE CHG'S / ECO 3862	[illegible]	[illegible]	[illegible]
J	EXTENSIVE CHGS / ECO 4052	[illegible]	[illegible]	[illegible]
K	ADD CI DES. TO SHEET 4 / ECO 4248	[illegible]	[illegible]	[illegible]
L	ADDED DIX2CC8, DELETED CE TOP VIEW SH. 8 / ECO 4399	[illegible]	[illegible]	5/1/67
M	EXT CHG'S. PER ECO 4328	[illegible]	[illegible]	7/1/67
N	EXT CHG'S PER ECO 4393 7-24-67	[illegible]	[illegible]	[illegible]
P	EXT CHG'S SHT 2 PER ECO 4263	[illegible]	[illegible]	7/1/67
R	SHT 3 CODING A26D1 WAS A26D1¢ A26D10S WAS A2AD10S PER ECO 4403	[illegible]	[illegible]	7/27/67
S	EXT CHG'S SHT 8 PER ECO 4645	[illegible]	[illegible]	9/1/67
T	EXT CHG'S SHT 2 & 8 PER ECO 4468	[illegible]	[illegible]	9/1/67
U	CHG'D PIN LOC. SH6. T/ECO 5091	[illegible]	[illegible]	12/4/67
V	EXT. CHGS / ECO 5222	[illegible]	[illegible]	1/25/68

ALPHA SEQUENCE
ABCDEFGHJKLMNPQRSTUVYZ

NUMERICAL SEQUENCE
Ø123456789

UNIT	AREA	ZONE	ROW	COL	PIN
⊥	⊥	⊥	⊥	⊥	⊥

'X' INDICATES AN UNUSED DIGIT.
UNIT & AREA CODE DESIGNATIONS ARE VARIABLE AND WILL BE ASSIGNED PER INDIVIDUAL UNIT CODING SHEET

UNIT CODING
A _ _ _ _ _ _ _
Z _ _ _ _ _ _ _

SHEET 1 OF 9

UNLESS OTHERWISE SPECIFIED DIMENSIONS ARE IN INCHES TOLERANCES ± FRACTIONS ± .XX ± .XXX ANGLES ± .XX IS PLACE DECIMALS .X ± .XX IS PLACE	IC DWG. NO.	DESCRIPTION		GOVT NO.
SURFACE QUALITY PER ØØ13	HONEYWELL EDP COMPUTER CONTROL DIVISION Old Connecticut Path, Framingham, Mass.		TITLE: CODING DWG DDP-416, 516	
CODE IDENT NO. 07573	DRAWN [illegible] 7-14-66	CHK'D FORMAT ONLY RM 8-1-66	SIZE D	DWG NO. 014087
	ENGR P. SICILIA 8-3-66	APP'D T. REGARDIES 7-22-66		REV V

64

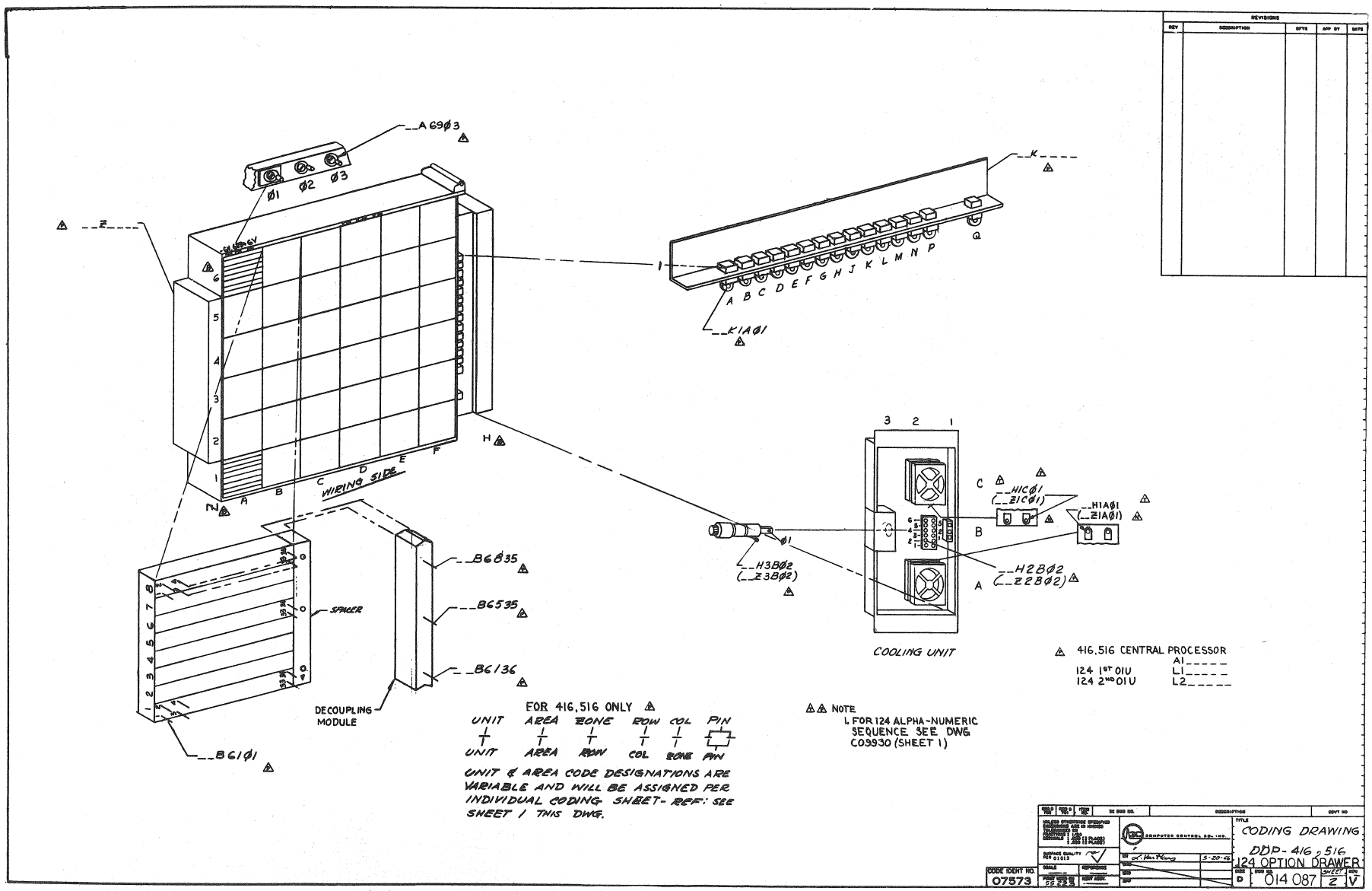

REVISIONS
REV
DESCRIPTION
DFTS
APP BY
DATE
A69Ø3
Ø1 Ø2 Ø3
Z
K
Q
A B C D E F G H J K L M N P
K1AØ1
WIRING SIDE
H
B6835
B6535
B6136
SPACER
DECOUPLING MODULE
B61Ø1
3 2 1
C
B
A
H1CØ1
(Z1CØ1)
H1AØ1
(Z1AØ1)
H3BØ2
(Z3BØ2)
H2BØ2
(Z2BØ2)
COOLING UNIT
416,516 CENTRAL PROCESSOR
124 1ST 01U
124 2ND 01U
A1
L1
L2
FOR 416,516 ONLY
UNIT AREA ZONE ROW COL PIN
UNIT AREA ROW COL ZONE PIN
UNIT & AREA CODE DESIGNATIONS ARE VARIABLE AND WILL BE ASSIGNED PER INDIVIDUAL CODING SHEET- REF: SEE SHEET 1 THIS DWG.
NOTE
1. FOR 124 ALPHA-NUMERIC SEQUENCE SEE DWG C09930 (SHEET 1)
COMPUTER CONTROL CO., INC.
CODING DRAWING
DDP-416, 516
124 OPTION DRAWER
5-20-66
CODE IDENT NO.
07573
D
014 087
SHEET 2
V

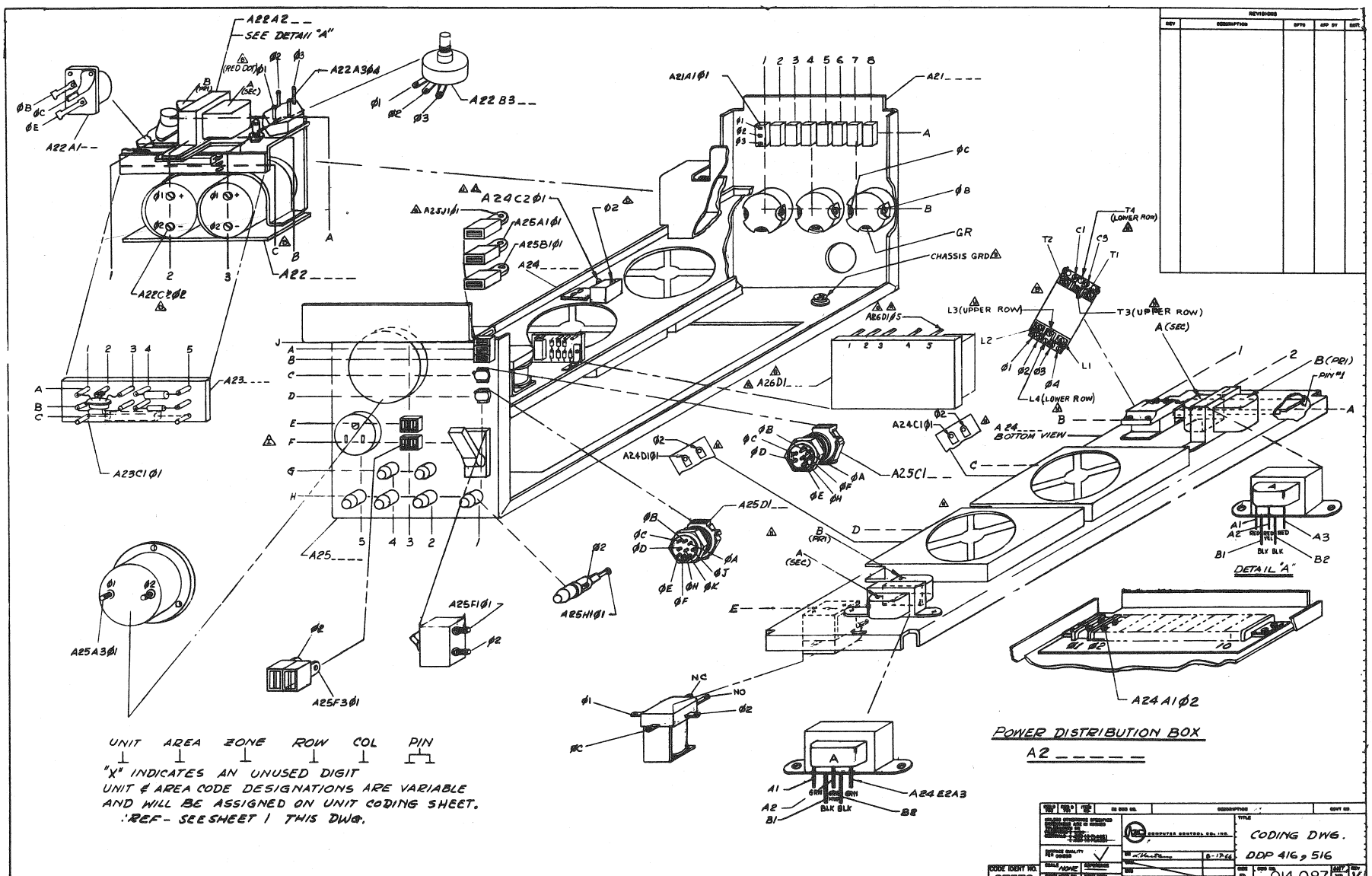
A22A2__
SEE DETAIL "A"
A22A3Ø4
A22B3__
A22A1__
A22C2Ø2
A22__
A24C2Ø1
A25J1Ø1
A25A1Ø1
A25B1Ø1
A24__
A21A1Ø1
A21__
ØC
ØB
GR
CHASSIS GRD
A26D1Ø5
A26D1__
A24C1Ø1
A24 BOTTOM VIEW
T4 (LOWER ROW)
T2
C1
C9
T1
L3(UPPER ROW)
T3(UPPER ROW)
L2
L1
L4(LOWER ROW)
A(SEC)
B(PRI)
PIN #1
A23__
A23C1Ø1
A24D1Ø1
A25C1__
A25D1__
A25__
A25A3Ø1
A25F1Ø1
A25F3Ø1
A25H1Ø1
DETAIL "A"
A24A1Ø2
A24E2A3
NC
NO
UNIT AREA ZONE ROW COL PIN
"X" INDICATES AN UNUSED DIGIT
UNIT & AREA CODE DESIGNATIONS ARE VARIABLE
AND WILL BE ASSIGNED ON UNIT CODING SHEET.
∴REF - SEE SHEET 1 THIS DWG.
POWER DISTRIBUTION BOX
A2 _____
REVISIONS
DESCRIPTION
CODING DWG.
DDP 416, 516
CODE IDENT NO. 07573
014 087
SIZE D
REV J

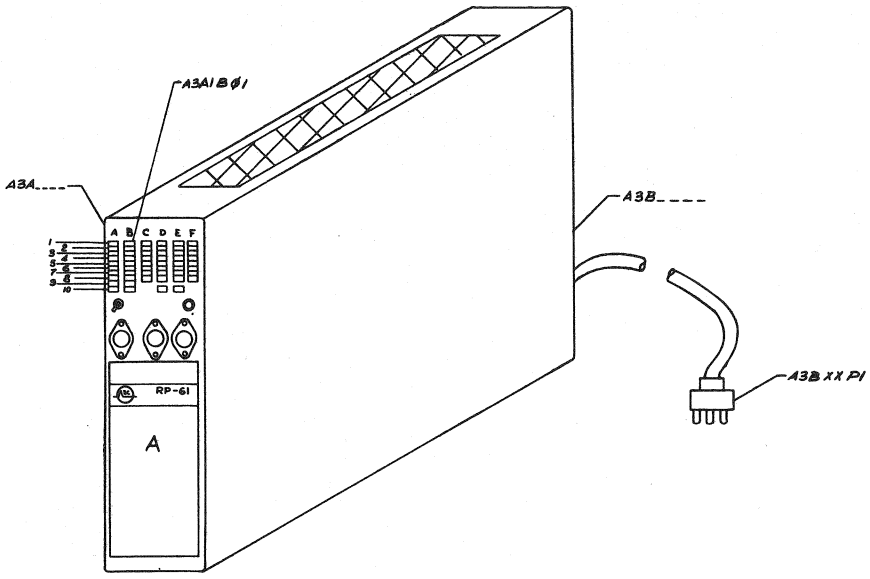

UNIT AREA ZONE ROW COL PIN

"X" INDICATES AN UNUSED DIGIT

UNIT & AREA CODE DESIGNATIONS ARE VARIABLE AND WILL BE ASSIGNED ON UNIT CODING SHEET, REF.: SEE SHEET 1 THIS DWG.

POWER SUPPLY RP-61

A3_ _ _ _ _ _

REVISIONS				
REV	DESCRIPTION	APP'D	APP BY	DATE

CODE IDENT NO. 07573	DWG NO. 014 087	SHT 4	REV V

TITLE: CODING DWG DDP-416, 516

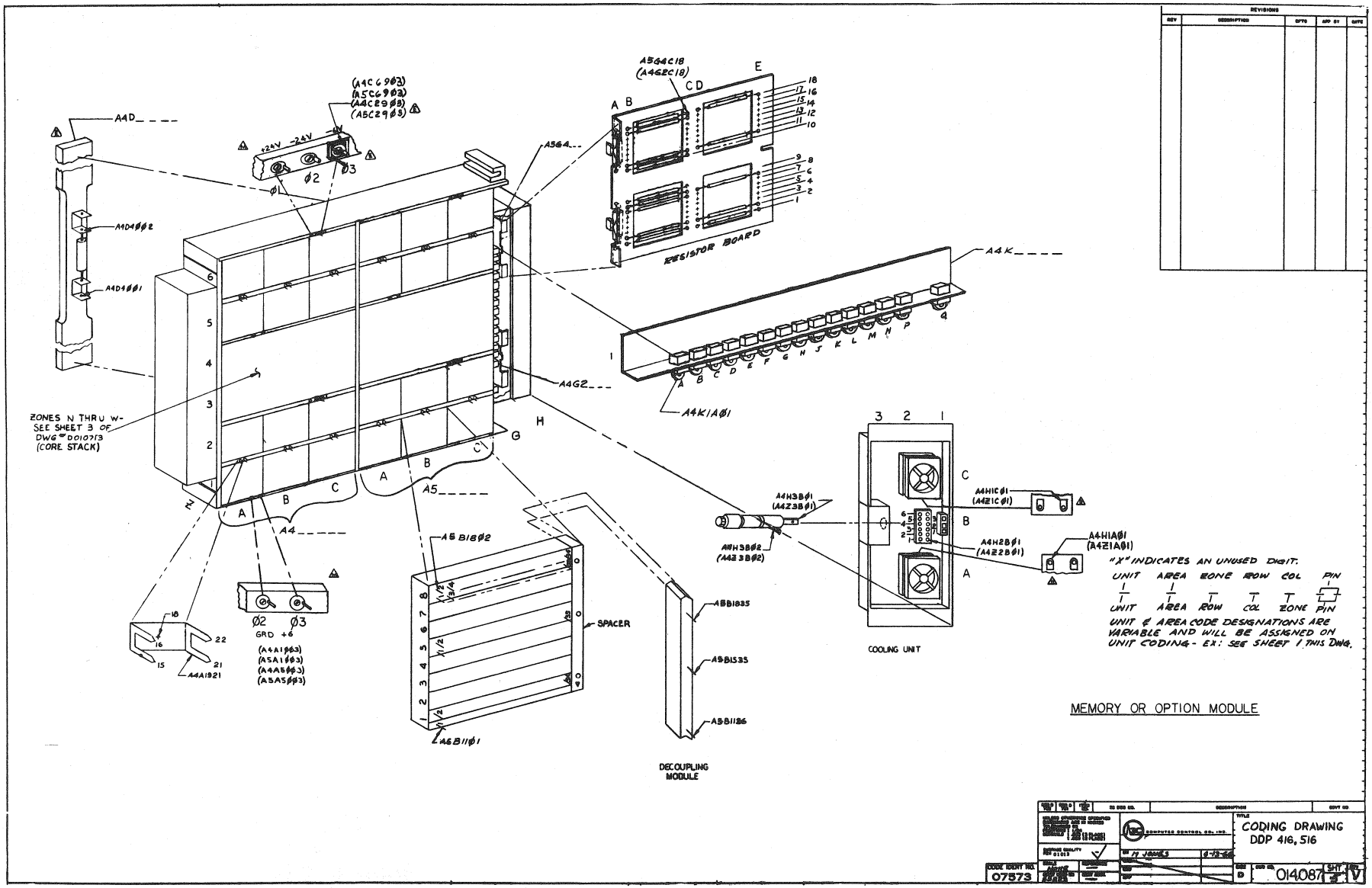

A4D
A4D4ØØ2
A4D4ØØ1
(A4C69Ø3)
(A5C69Ø3)
(A4C29Ø3)
(A5C29Ø3)
+24V -24V -6V
Ø1
Ø2
Ø3
A5G4
A5G4C18
(A4G2C18)
RESISTOR BOARD
A4K
A4K1AØ1
A4G2
ZONES N THRU W-
SEE SHEET 3 OF
DWG # D010713
(CORE STACK)
A4
A5
A5B18Ø2
A6B11Ø1
SPACER
GRD +6
(A4A1Ø03)
(A5A1Ø03)
(A4A5Ø03)
(A5A5Ø03)
A4A1921
A5B1835
A5B1535
A5B1126
DECOUPLING
MODULE
A4H3BØ1
(A4Z3BØ1)
A4H3BØ2
(A4Z3BØ2)
A4H1CØ1
(A4Z1CØ1)
A4H2BØ1
(A4Z2BØ1)
A4H1AØ1
(A4Z1AØ1)
COOLING UNIT
"X" INDICATES AN UNUSED DIGIT.
UNIT AREA ZONE ROW COL PIN
UNIT AREA ROW COL ZONE PIN
UNIT & AREA CODE DESIGNATIONS ARE
VARIABLE AND WILL BE ASSIGNED ON
UNIT CODING - EX: SEE SHEET 1 THIS DWG.
MEMORY OR OPTION MODULE
CODING DRAWING
DDP 416, 516
07573
014087

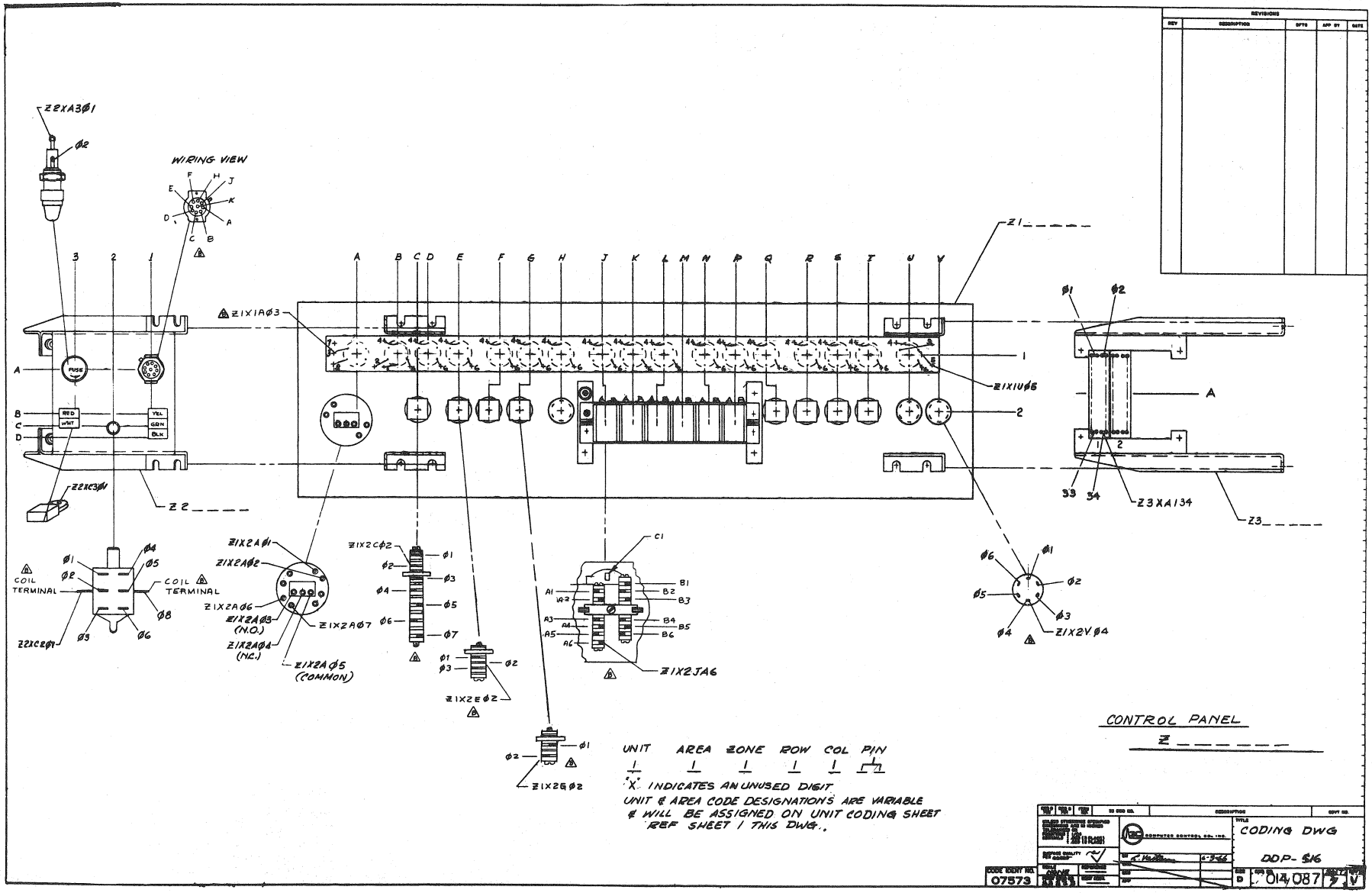

WIRING VIEW
Z2XA3Ø1
Ø2
Z1X1AØ3
Z1X1UØ5
Z1
Z2
Z2XC3Ø1
Z3XA134
Z3
COIL TERMINAL
Z2XC2Ø1
Z1X2AØ1
Z1X2AØ2
Z1X2AØ6
Z1X2AØ3 (N.O.)
Z1X2AØ4 (N.C.)
Z1X2AØ5 (COMMON)
Z1X2AØ7
Z1X2CØ2
Z1X2EØ2
Z1X2JA6
Z1X2VØ4
Z1X2GØ2
CONTROL PANEL
Z _ _ _ _ _ _
UNIT AREA ZONE ROW COL PIN
"X" INDICATES AN UNUSED DIGIT
UNIT & AREA CODE DESIGNATIONS ARE VARIABLE
& WILL BE ASSIGNED ON UNIT CODING SHEET
REF SHEET 1 THIS DWG.
CODING DWG
DDP-516
07573
014087

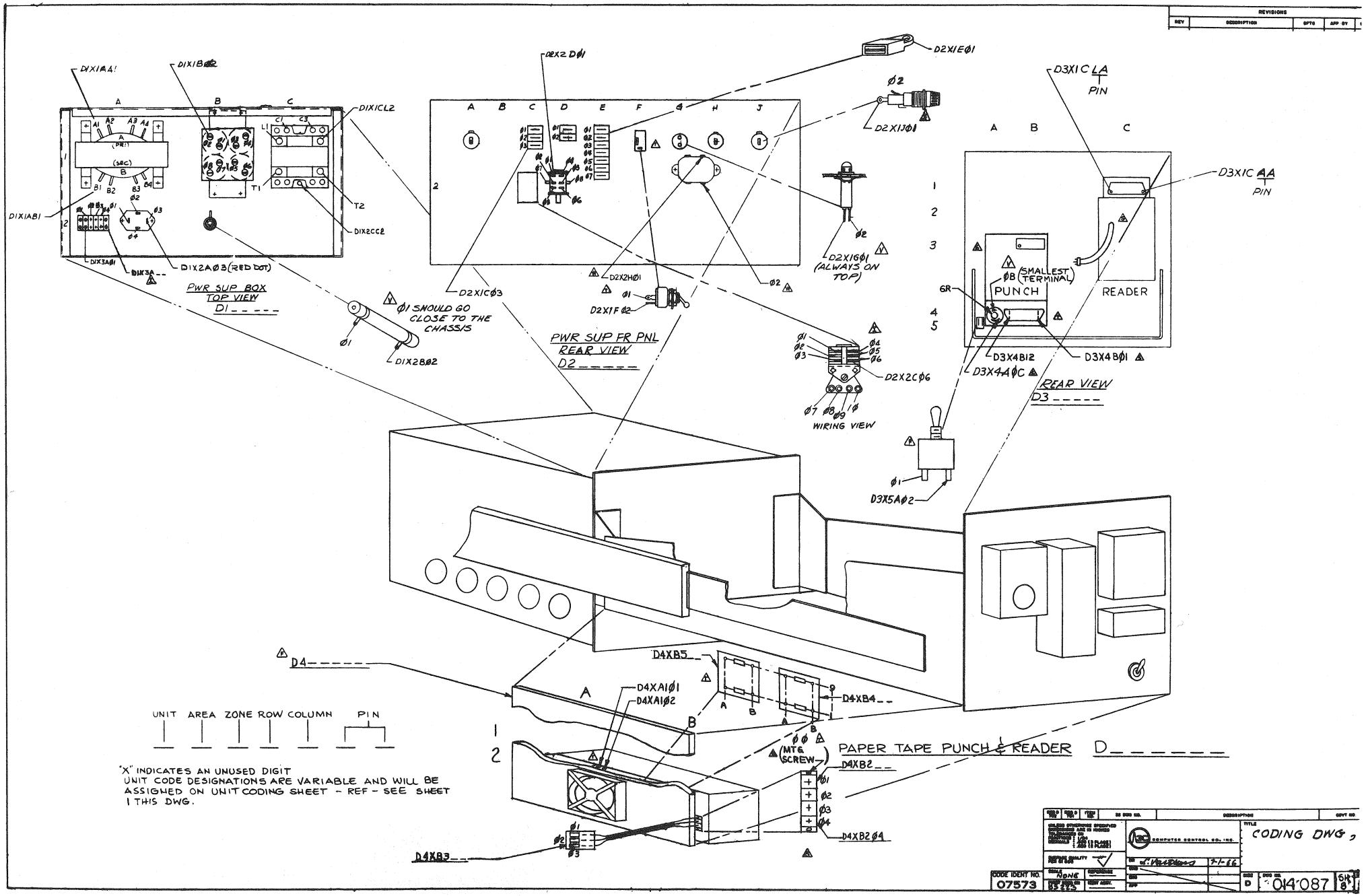

PWR SUP BOX
TOP VIEW
D1 _ _ _ _ _
PWR SUP FR PNL
REAR VIEW
D2 _ _ _ _ _
REAR VIEW
D3 _ _ _ _ _
PUNCH
READER
(SMALLEST TERMINAL)
WIRING VIEW
D1X1AA1
D1X1B
D1X1CL2
D1X1AB1
D1X2AØ3 (RED DOT)
D1X2CC2
D1X3AØ1
D1X3A
D1X2BØ2
Ø1 SHOULD GO CLOSE TO THE CHASSIS
D2X2DØ1
D2X1CØ3
D2X2HØ1
D2X1FØ2
D2X1EØ1
D2X1JØ1
D2X1GØ1 (ALWAYS ON TOP)
D2X2CØ6
D3X1C LA PIN
D3X1C AA PIN
D3X4B12
D3X4AØC
D3X4BØ1
D3X5AØ2
D4 _ _ _ _ _
D4XB5
D4XB4
D4XA1Ø1
D4XA1Ø2
D4XB2
D4XB2Ø4
D4XB3
(MTG SCREW)
PAPER TAPE PUNCH & READER D _ _ _ _ _ _
UNIT AREA ZONE ROW COLUMN PIN
"X" INDICATES AN UNUSED DIGIT
UNIT CODE DESIGNATIONS ARE VARIABLE AND WILL BE ASSIGNED ON UNIT CODING SHEET - REF - SEE SHEET 1 THIS DWG.
REVISIONS
CODING DWG
COMPUTER CONTROL CO., INC.
CODE IDENT NO. 07573
NONE
D
014087
SH 8

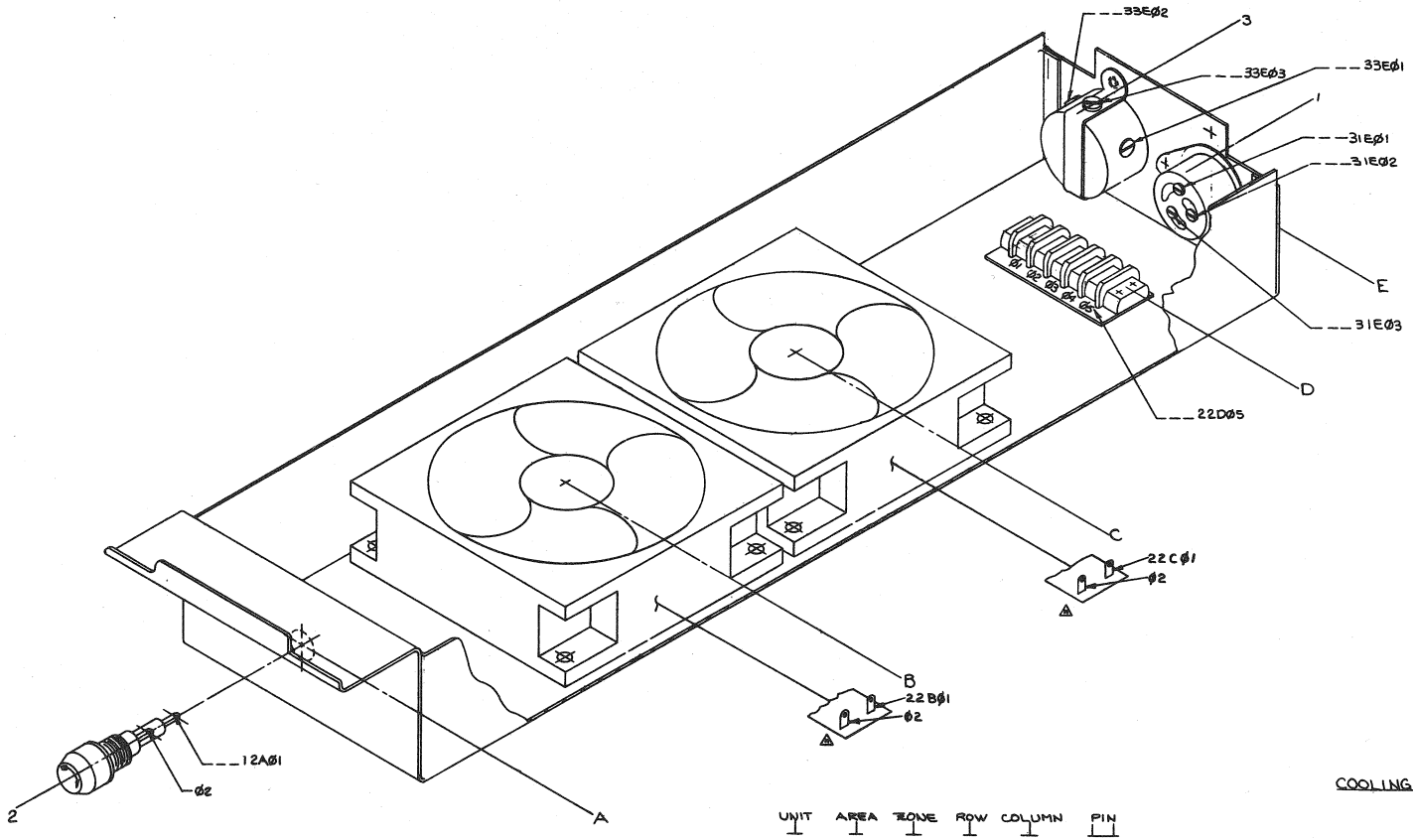

"X" INDICATES AN UNUSED DIGET UNIT & AREA CODE DESIGNATIONS ARE VARIABLE AND WILL BE ASSIGNED PER INDIVIDUAL CODING SHEET - REF: SEE SHEET ONE OF THIS DWG.

COOLING UNIT B6_____
C6_____

REVISIONS				
REV	DESCRIPTION	DFTG	APP BY	DATE

REQ'D FOR	REQ'D FOR	ITEM NO.	3C DWG. NO.	DESCRIPTION	GOV'T NO

UNLESS OTHERWISE SPECIFIED DIMENSIONS ARE IN INCHES TOLERANCES ON FRACTIONS ± 1/64 DECIMALS ± .005 (3 PLACES) ± .010 (2 PLACES)

SURFACE QUALITY PER 01013

SCALE FULL

REFERENCE

CODE IDENT NO. 07573

FIRST USED ON NEXT ASSY 55223

HONEYWELL INC.
COMPUTER CONTROL DIVISION
Old Connecticut Path, Framingham, Mass.

DR. [signature] 7-19-66
CHK
ENG
APP

TITLE CODING DWG
SHEET 9

SIZE D DWG NO 014087 REV V

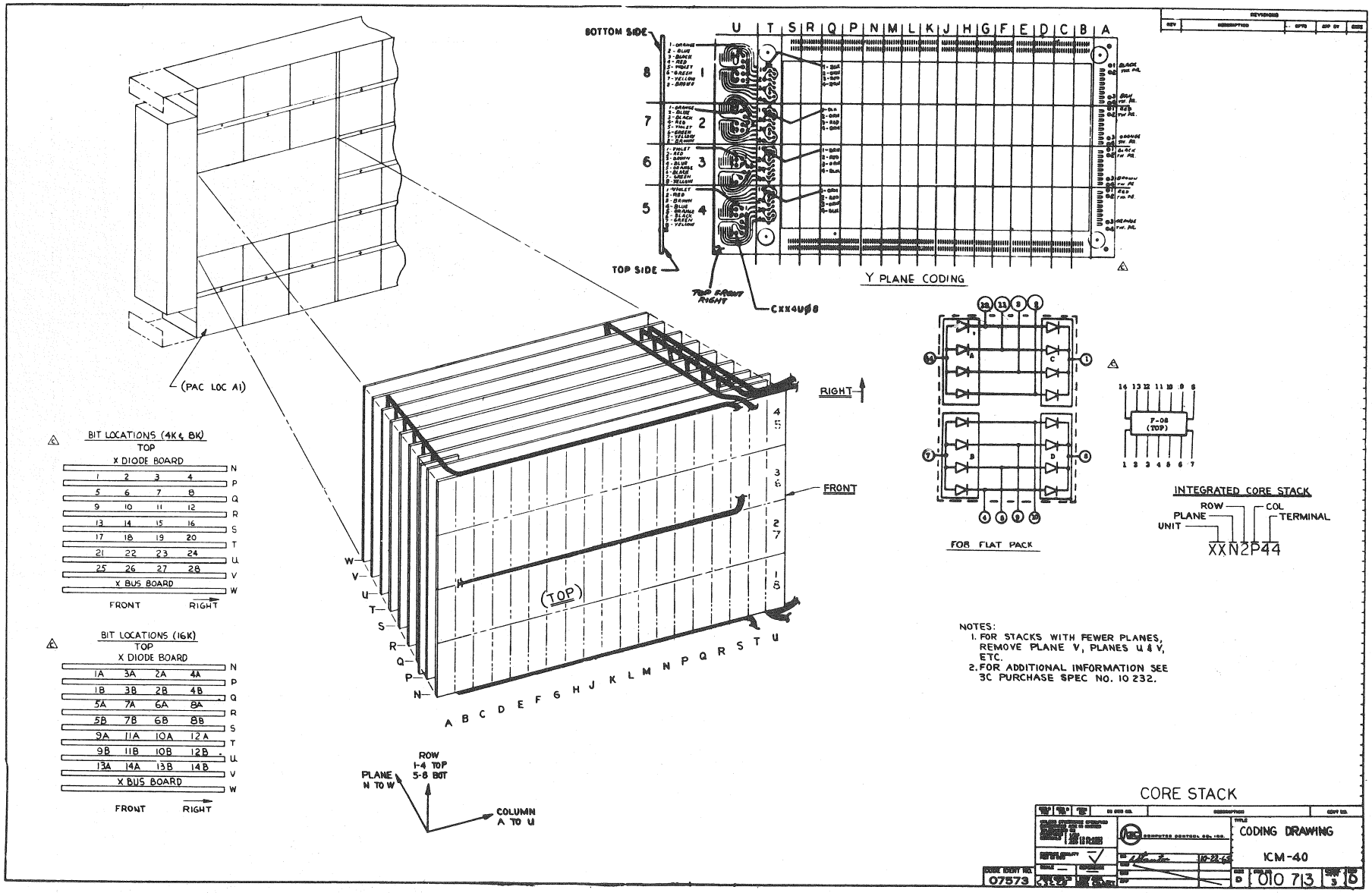
BOTTOM SIDE
TOP SIDE
U T S R Q P N M L K J H G F E D C B A
8 7 6 5
1 2 3 4
Y PLANE CODING
(PAC LOC A1)
RIGHT
FRONT
(TOP)
W V U T S R Q P N
A B C D E F G H J K L M N P Q R S T U
4 3 2 1
F-08 (TOP)
FOR FLAT PACK
INTEGRATED CORE STACK
ROW
COL
PLANE
TERMINAL
UNIT
XXN2P44
BIT LOCATIONS (4K & 8K)
TOP
X DIODE BOARD
1 2 3 4 N
5 6 7 8 P
9 10 11 12 Q
13 14 15 16 R
17 18 19 20 S
21 22 23 24 T
25 26 27 28 U
X BUS BOARD V
FRONT RIGHT W
BIT LOCATIONS (16K)
TOP
X DIODE BOARD
1A 3A 2A 4A N
1B 3B 2B 4B P
5A 7A 6A 8A Q
5B 7B 6B 8B R
9A 11A 10A 12A S
9B 11B 10B 12B T
13A 14A 13B 14B U
X BUS BOARD V
FRONT RIGHT W
ROW
1-4 TOP
5-8 BOT
PLANE
N TO W
COLUMN
A TO U
NOTES:
1. FOR STACKS WITH FEWER PLANES, REMOVE PLANE V, PLANES U & V, ETC.
2. FOR ADDITIONAL INFORMATION SEE 3C PURCHASE SPEC NO. 10 232.
CORE STACK
CODING DRAWING
ICM-40
07573
D 010 713
SHEET 3 OF 6

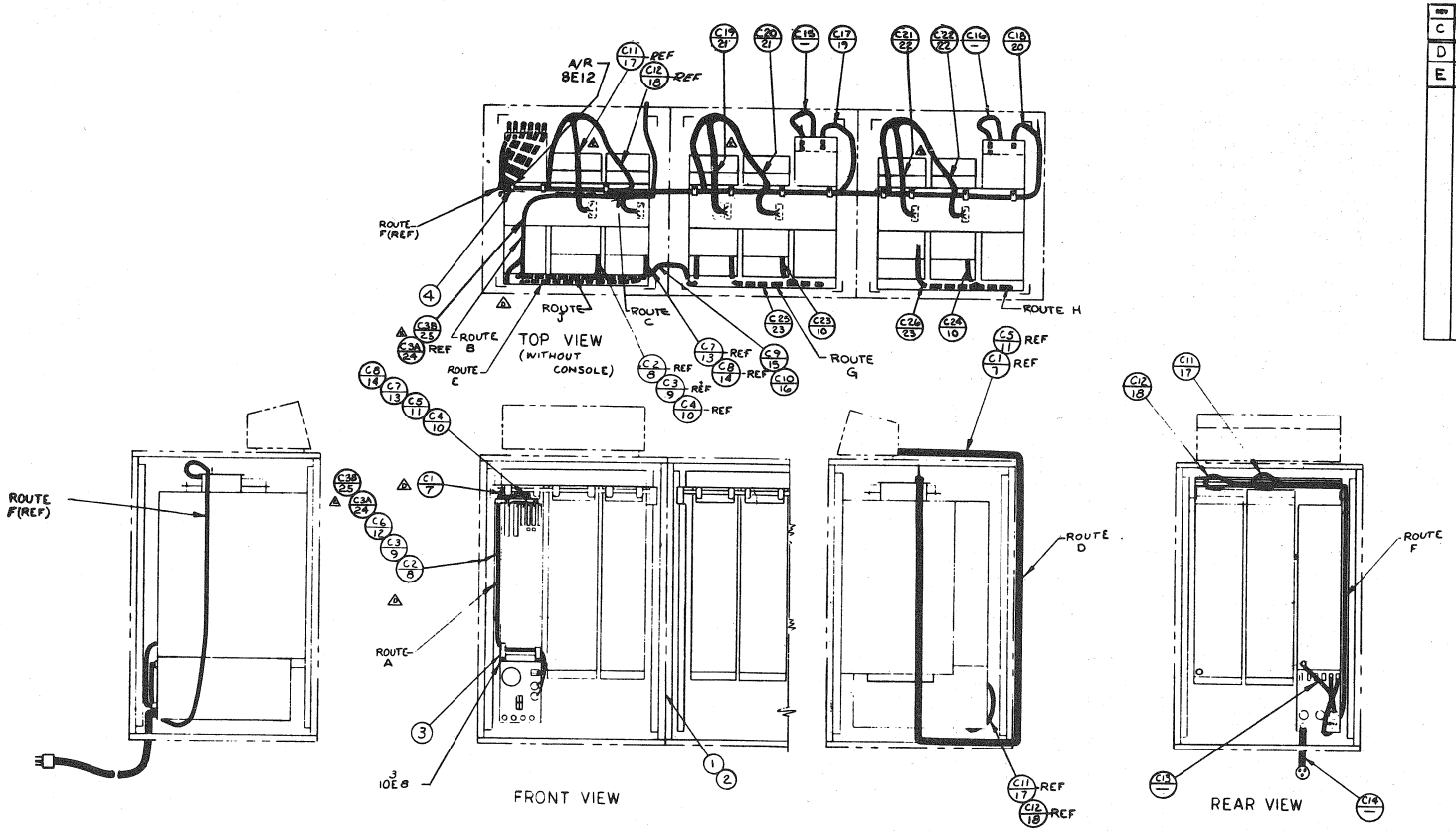

AC & DC CABLING

REV	DESCRIPTION	DATE	APP'D BY
C	REDRAWN/ECO L-3467		
D	EXT CHG'S PER ECO 9286		
E	EXT CH6'S PER ECO 4412	9-8-67	

–	P014417	PARTS LIST

CABLE ROUTING
DDP-416/516

CODE IDENT NO. 07973 | SIZE D | 014417 | E

AC & DC CABLING

ITEM NO.	CABLE NO.	FROM	TO	RTE
7	C1	CONT PNL 2	PWR DIST A2	ABCD
8	C2	C.P.U. A1	PWR DIST A2	AE
9	C3	C.P.U. A1	PWR DIST A2	AE
10	C4	RP61 A3	C.P.U. A1	E
11	C5	CONT PNL 2	RP61 A3	BCD
12	C6	PWR DIST A2	RP61 A3	A
13	C7	RP61 A3	MEM A4	E
14	C8	RP61 A3	MEM A4	E
15	C9	RP61 A3	MEMORY B1	J
16	C10	RP61 A3	MEMORY B2	J
17	C11	PWR DIST A2	C.P.U. A1	F
18	C12	PWR DIST A2	MEM. A4	F
*	C13	RP61 A3BXXP1	PWR DIST A2	–
*	C14	PWR DIST A2	A.C. OUTLET	–
***	C15	RPG2 B5	COOLING BG	–
***	C16	RPG2 C5	COOLING CG	–
19	C17	COOLING BG	PWR DIST A2	F
20	C18	COOLING CG	PWR DIST A2	F
21	C19	OPTION B1	PWR DIST A2	F
21	C20	OPTION B3	PWR DIST A2	F
22	C21	OPTION C1	PWR DIST A2	F
22	C22	OPTION C3	PWR DIST A2	F
10	C23	RP-G2 B5	OPTION B3	G
10	C2A	RP-G2 C5	OPTION C3	H
23	C25	RP-G2 B5	OPTION B1	G
23	C26	RP-G2 C5	OPTION C1	H
24	C3A	LOGIC B1/B2	PWR DIST A2	ABC
25	C3B	LOGIC C1/C2	PWR DIST A2	ABC

* SUPPLIED ATTACHED TO RP-61

** SUPPLIED ATTACHED TO PWR DIST BOX

*** SUPPLY ATTACHED TO RP G2

REVISIONS				
REV	DESCRIPTION	APP'D	APP BY	DATE

CABLE ROUTING

DDP 416 & 516

CODE IDENT NO. 07573

SIZE D | DWG NO. 014 417 | REV 2 E

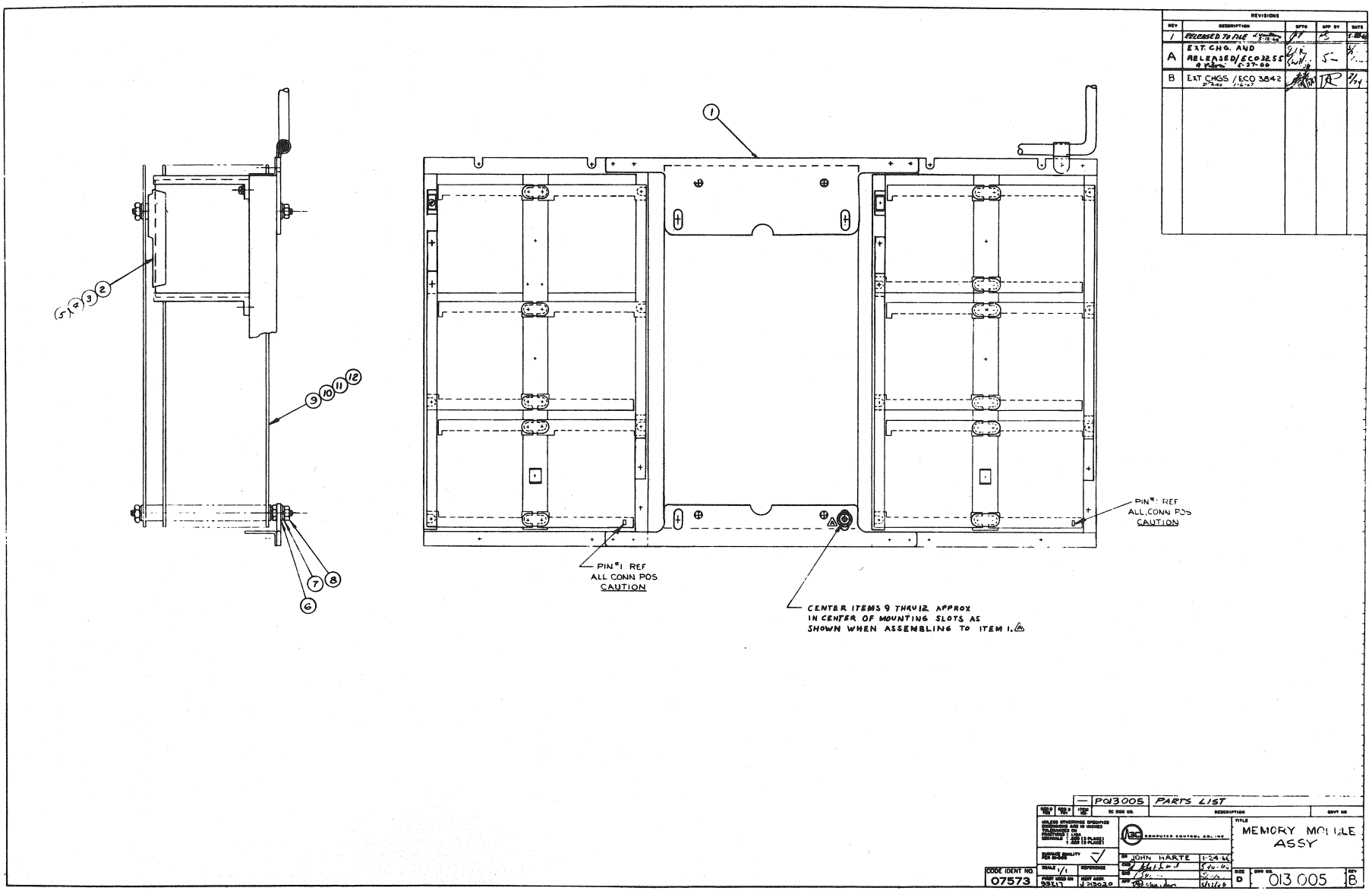
REVISIONS
REV
DESCRIPTION
DFTG
APP BY
DATE
1
RELEASED TO FILE
A
EXT. CHG. AND RELEASED/ECO 3255
B
EXT CHGS / ECO 3842
PIN #1 REF ALL CONN POS CAUTION
PIN #1 REF ALL CONN POS CAUTION
CENTER ITEMS 9 THRU 12 APPROX IN CENTER OF MOUNTING SLOTS AS SHOWN WHEN ASSEMBLING TO ITEM 1.
P013005
PARTS LIST
COMPUTER CONTROL CO., INC.
JOHN HARTE
1-24-66
MEMORY MODULE ASSY
CODE IDENT NO.
07573
SCALE 1/1
SIZE D
DWG NO. 013 005
REV B

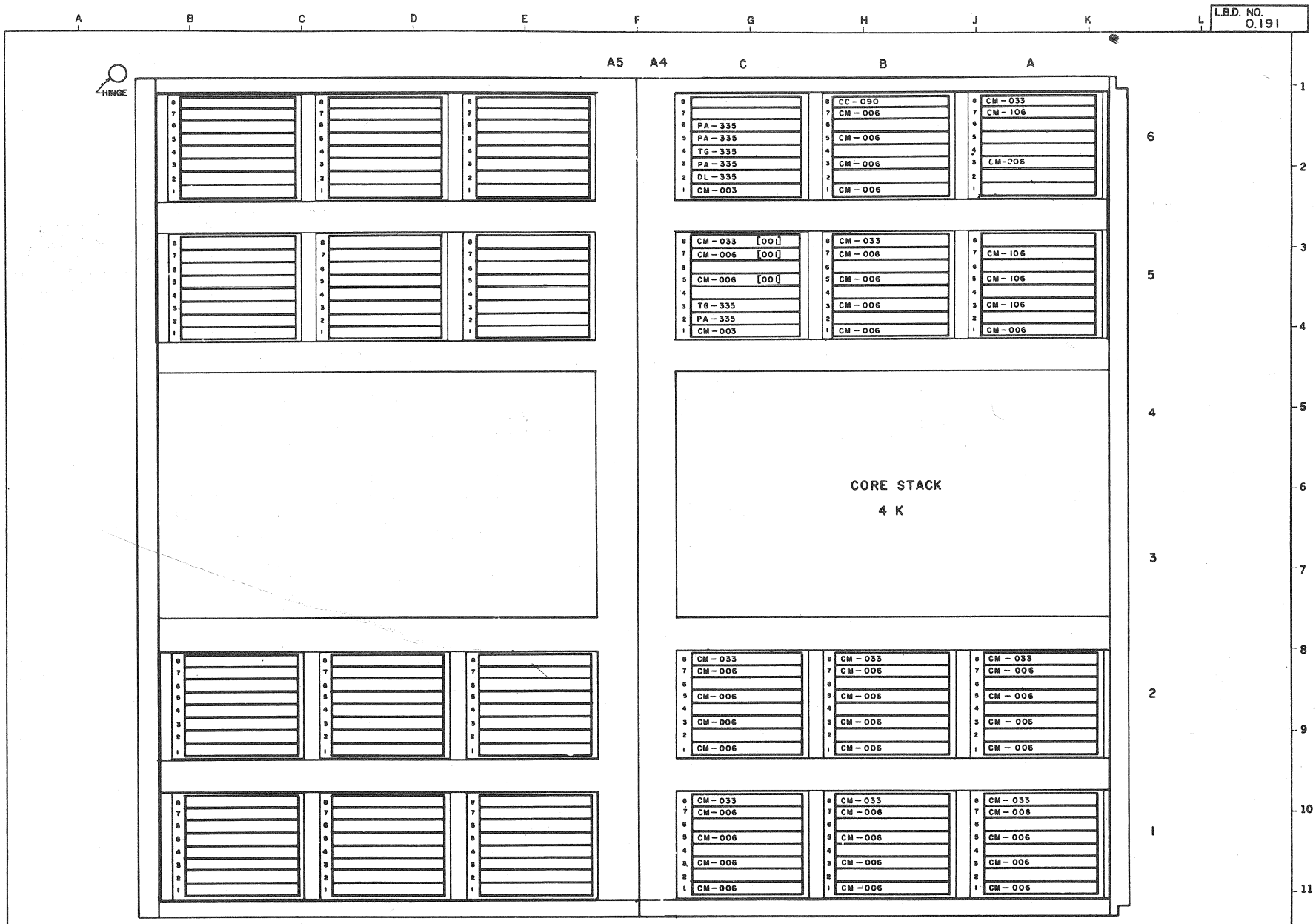

NOTES:
001 ALL PACS (PARITY)
002 ALL PACS EXCEPT THOSE INDICATED 001 (NO PARITY)

REV	REVISIONS	CHK.
A	TAKEN FROM SR# 64-1476	
B	ECO 4350 EXT. CHANGES 4/26/67	
C	ECO 4669 EXT. CHANGES SEE ECO F.D. 7/10/67	

HONEYWELL INC.
COMPUTER CONTROL DIVISION
Old Connecticut Path, Framingham, Mass.

	DATE
DR.	
ENG.	1-13-67
APP. G.C. Hendrie	1-13-67

PROJECT NO. 55215

TITLE
PAC ALLOCATION A4/A5
4K TILT OUT

SIZE C | DWG NO. 017110 | REV. C

L.B.D. NO. 0.192

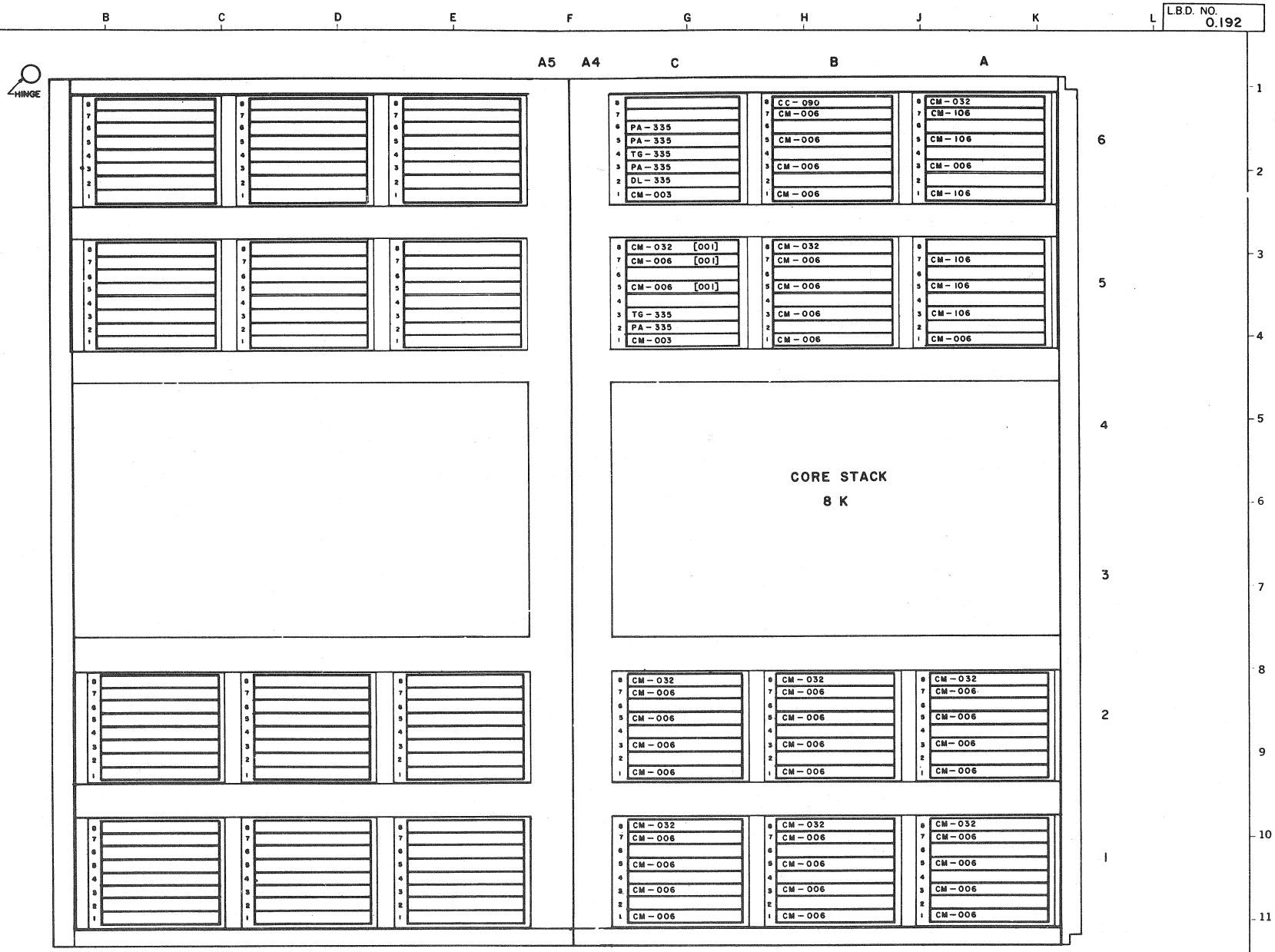

REFERENCE PAC COMPLEMENT A009705

NOTES:
001 ALL PACS (PARITY)
002 ALL PACS EXCEPT THOSE INDICATED 001 (NO PARITY)

REV	REVISIONS	CHK
A	TAKEN FROM SR #64-1476	
B	ECO 4350 EXT. CHANGES 4/26/67	
C	ECO 4669 EXT. CHANGES SEE ECO J.D. 7/18/67	

HONEYWELL INC.
COMPUTER CONTROL DIVISION
Old Connecticut Path, Framingham, Mass.

	DATE
DR.	
ENG.	1-13-67
APP.	1-13-67
PROJECT NO. 55215	

TITLE: PAC ALLOCATION A4/A5 8K TILT OUT

SIZE C | DWG NO. 017111 | REV. C

L.B.D. NO. 0.193
HINGE
A5 A4
CORE STACK
4 K
CORE STACK
8 K
REFERENCE PAC COMPLEMENT A 009705
NOTES:
001 ALL PACS (PARITY)
002 ALL PACS EXCEPT THOSE INDICATED 001 (NO PARITY)
REVISIONS
TAKEN FROM SR# 64-1476
ECO 4350
EXT. CHANGES 4/25/67
ECO 4895
EXT. CHANGES 10/12/67 SEE ECO
HONEYWELL INC.
COMPUTER CONTROL DIVISION
Old Connecticut Path, Framingham, Mass.
DR.
ENG.
APP.
PROJECT NO. 55215
DATE
1-13-67
TITLE
PAC ALLOCATION A4/A5
12K TILT OUT
SIZE C
DWG NO. 017112
REV. C

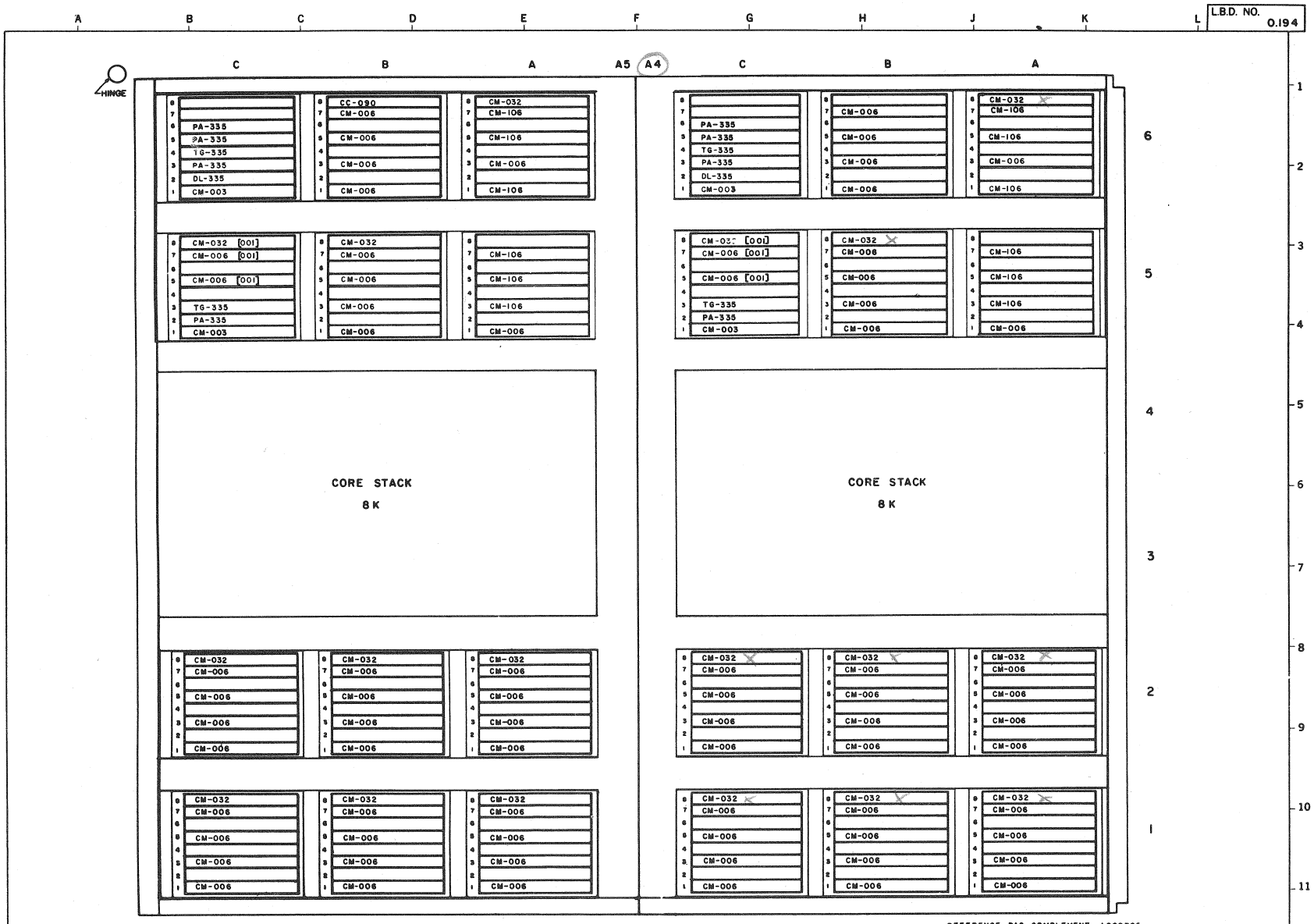

NOTES:
001 ALL PACS (PARITY)
002 ALL PACS EXCEPT THOSE INDICATED 001 (NO PARITY)

REVISIONS	REV
TAKEN FROM SR # 64-1476	A
ECO 4350	B
EXT. CHANGES 4/28/67	
ECO 4895	C
EXT. CHANGES SEE ECO 10/12/67 DMH	

HONEYWELL INC.
COMPUTER CONTROL DIVISION
Old Connecticut Path, Framingham, Mass.

DR.	DATE
ENG.	1-13-67
APP.	1-13-67
PROJECT NO. 55215	

TITLE
PAC ALLOCATION A4/A5
16K TILT OUT

SIZE	DWG NO.	REV.
C	017113	C

L.S.D. NO. 0.195

NOTES
001 ALL PACS (PARITY)
202 ALL PACS EXCEPT THOSE INDICATED 001 (NO PARITY)

REVISIONS	REL.
TAKEN FROM SR # 64-1476	A
ECO 4895	B
ENT. CHANGES SEE ECO	10/12/67 D.M.H.

HONEYWELL INC
COMPUTER CONTROL DIVISION
Old Connecticut Path Framingham Mass

	DATE
DR.	
ENG.	1-12-67
APP.	1-13-67
PROJECT NO 95215	

TITLE
PAC ALLOC B1/B2
8K TILT OUT

SIZE C | DWG NO. 017114 | REV. B

L.B.D. NO. 1.196

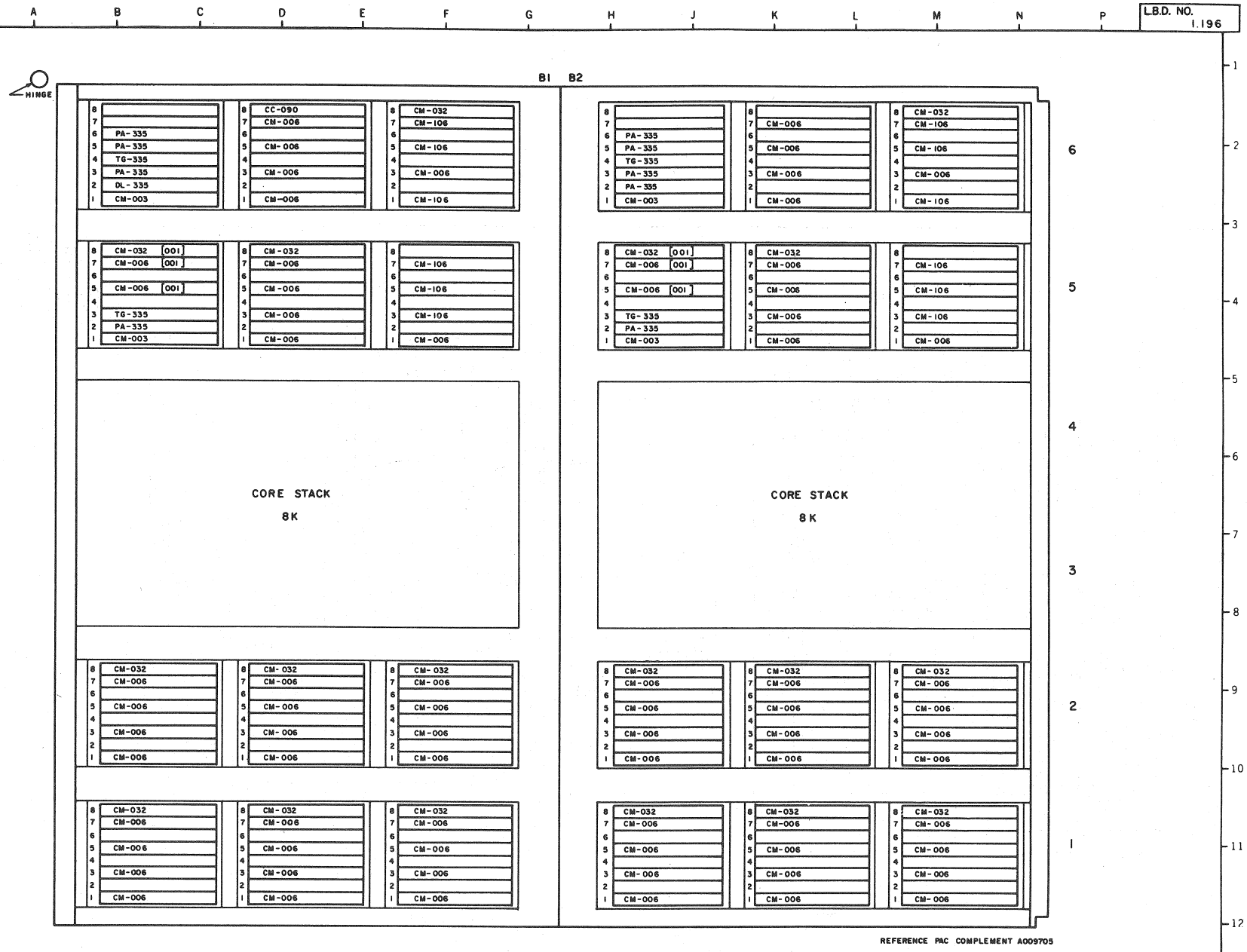

REFERENCE PAC COMPLEMENT A009705

NOTES:

1. 001 ALL PACS (PARITY)
2. 002 ALL PACS EXCEPT THOSE INDICATED 001 (NO PARITY)

REVISIONS	REV.	TAKEN FROM
CHK.	A	SR. NO. 64476 1/3/67 TL. RICHARDSON
		J. DESANTIS 1/13/67 ECO 4895
	B	EXT. CHANGES 10/12/67 SEE ECO D.M.H.
		R.A. BARELLA 10/17/67

HONEYWELL INC.
COMPUTER CONTROL DIVISION
Old Connecticut Path, Framingham, Mass

		DATE
DR.	A. KURTZER	
ENG.		1/13/67
APP.		1/13/67
PROJECT NO.	55215	

TITLE
PAC ALLOCATION B1/B2
16K TILT OUT

SIZE C | DWG NO. 017115 | REV. B

REVISIONS				
REV	DESCRIPTION	DFTG	APP BY	DATE
A	TAKEN FROM LAYOUT #U019454 & #U019455	#	#	#
B	EXT CHGS/ECO L5528	[illegible]	[illegible]	[illegible]
C	RELEASED/ECO L-5598	[illegible]	[illegible]	[illegible]
D	EXT CHG'S/ECO L-5619	[illegible]	[illegible]	[illegible]

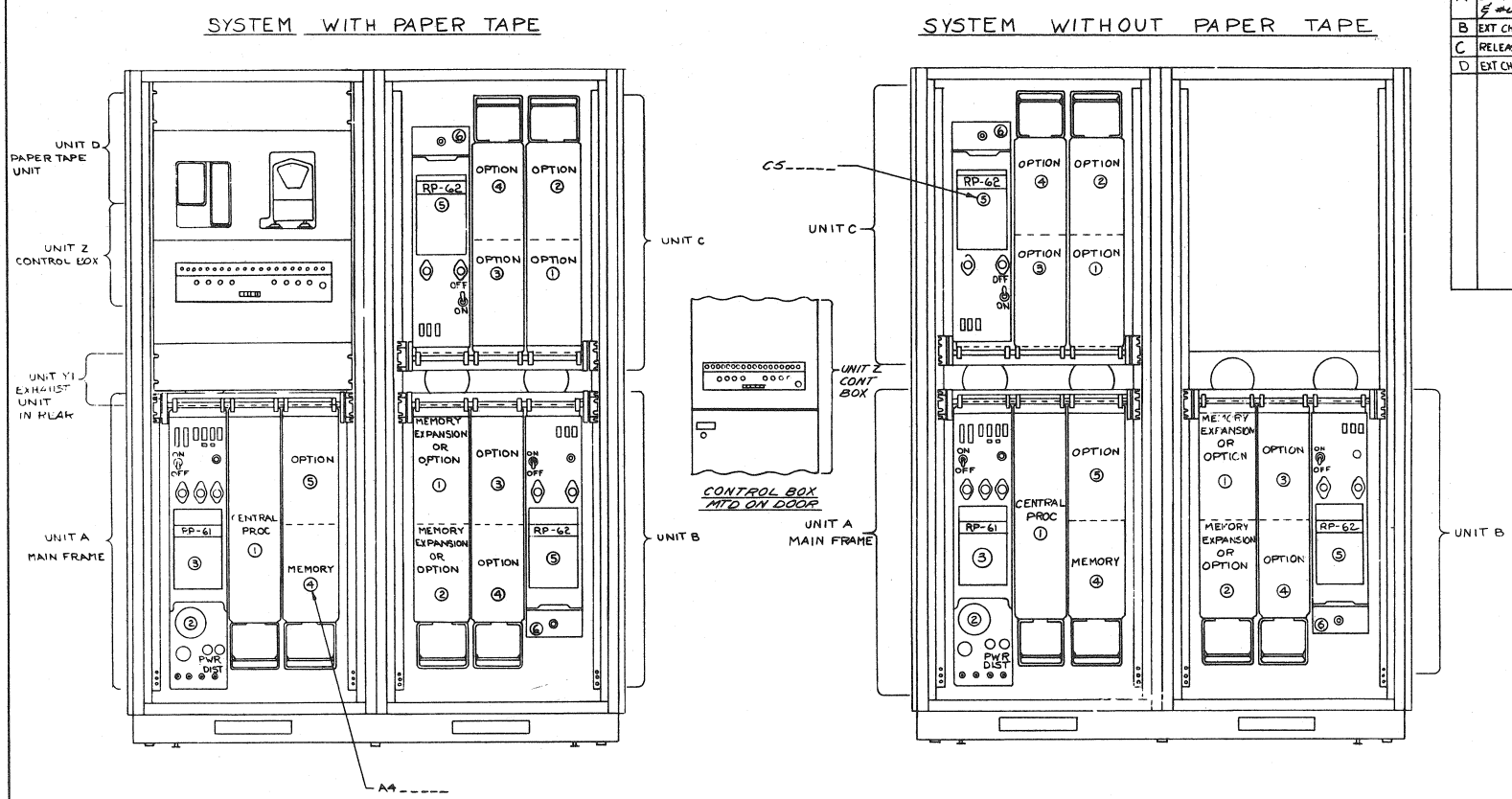

NOTES

1. ALPHA SEQUENCE: ABCDEFGHJKLMNP QRSTUVYZ
2. NUMERICAL SEQUENCE: Ø123456789
3. X INDICATES AN UNUSED DIGET
4. REFER TO DWG NO. A020250701 FOR CODING BREAKDOWN OF EXHAUST UNIT IN REAR.
5. REFER TO DWG. NO D014087000 FOR CODING BREAKDOWN OF REMAINING UNITS.

UNIT Y
AREA I
ZONE X
ROW X
COL D
PIN Ø
PIN 2

REQ'D NO	REQ'D PER	ITEM NO	X DWG NO	DESCRIPTION	GOV'T NO

UNLESS OTHERWISE SPECIFIED DIMENSIONS ARE IN INCHES TOLERANCES ON FRACTIONS ± 1/64 DECIMALS ± .010 (3 PLACE) ± .005 (2 PLACE)

SURFACE QUALITY PER 10147C62

HONEYWELL INC. COMPUTER CONTROL DIVISION Old Connecticut Path, Framingham, Mass.

TITLE: CODING 516 N

CODE IDENT NO	SCALE	REFERENCE	DR	CHD	ENG	APP
07573	NONE		[illegible]	[illegible]	[illegible]	[illegible]

FIRST USED ON NEXT ASSY 33268 A020352

SIZE D | DWG NO 020350 | REV D

Eigentum
Computer Cabinett Göttingen
INVENTAR-NR.
—022