62949100

CONTROL DATA CORPORATION

CDC® 40003-203/204/205/206

PLATO® FLEXIBLE DISK SUBSYSTEM

AND

40003-200

16K RAM EXPANSION

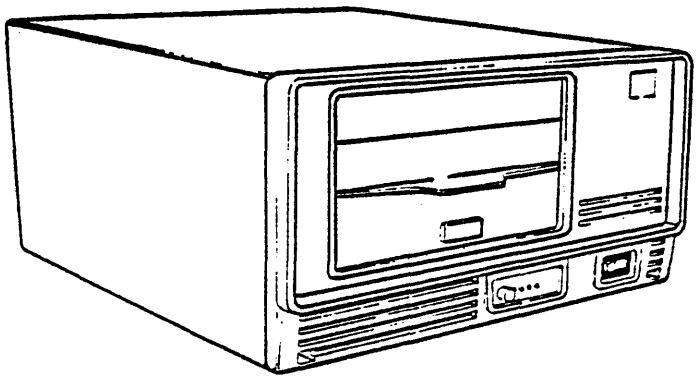

HARDWARE MAINTENANCE MANUAL
(SITE AND SUPPORT INFORMATION)

REVISION RECORD

REVISION	DESCRIPTION
01 (08-13-80)	Preliminary release.
A (10-03-80)	Final release. Includes changes per ECOs 14165, 14190, 14199, 14203, 14238, 14246, 14258, 14317, 14323, and 14328.
B-Interim (12-17-80)	Manual revised to incorporate ECO 14376.
C (01-23-81)	Manual revised to incorporate ECO's 14469, 14468, 14454, 14391, 14329, 14321, and 14279. Incorporates ECO 14376 (B-Interim) in its final form & makes technical corrections/changes.
D (03-02-81)	Manual revised to incorporate ECOs 14514 and 14571.

Publication No.
62949100

01989-2

REVISION LETTERS I, O, Q AND X ARE NOT USED

Address comments concerning this manual to:

Control Data Corporation
Technical Publications Department
2401 North Fairview Avenue
St. Paul, Minnesota 55113

or use Comment Sheet in the back of this manual.

MANUAL TO EQUIPMENT LEVEL CORRELATION SHEET

This manual reflects the equipment configurations listed below.

EXPLANATION: Locate the equipment type and series number, as shown on the equipment FCO log, in the list below. Immediately to the right of the series number is an FCO number. If that number and all of the numbers underneath it match all of the numbers on the equipment FCO log, then this manual accurately reflects the equipment.

EQUIPMENT TYPE	SERIES	WITH FCO'S	COMMENTS
FA501-A	01 02 03 04	 14571	ECO's 14165 14328, 14376, 14454 14468
FA501-B	01 02 03 04	 14571	ECO's 14165, 14328, 14376, 14454 14468
BR810-A	01 01 02		14165, 14328 14468 only
BR810-B	01 01 02		14165, 14328 14468 only
XA243-A	01		
FT116-A	01		

01987

LIST OF EFFECTIVE PAGES

New features, as well as changes, deletions, and additions to information in this manual are indicated by bars in the margins or by a dot near the page number if the entire page is affected. A bar by the page number indicates pagination rather than content has changed.

PAGE	REV
Cover	-
Title Page	-
ii thru vi	D
vii	A
viii	C
ix	A
x	C
xi	A
xii	D
xiii and xiv	C
1-1	A
1-2/1-3	C
2-1/2-2	A
2-3	C
2-4	A
3-1	C
3-2	A
3-3 thru 3-5	C
3-6 thru 3-8	A
3-9 thru 3-13	C
4-1/4-2	A
4-3	C
4-4/4-5	A
4-6	C
4-7/4-8	A
4-9	C
4-11/4-12	A
4-13	C

PAGE	REV
4-14/4-15	A
5-1	A
5-2 thru 5-17	B
5-18 thru 5-22	A
6-1 thru 6-4	A
6-5	C
6-6	A
6-7	C
6-8	A
6A-1-6A-2	A
6A-3	C
6A-4	A
6A-5	C
6A-6	A
6A-7/6A-8	C
6B-1	C
6B-2 thru 6B-4	A
6B-5 thru 6B-7	C
6B-8	B
6B-9	C
6B-10	A
7-1/7-2	A
7-3/7-4	D
7-5/7-6	A
7-7	B
7-8	A
7-9	B
7-10	A

PAGE	REV
7-11 thru 7-20	C
7-21 thru 7-24	D
7-25 thru 7-28	A
7-29/7-30	D
7-31/7-32	A
7-33 thru 7-38	D
7-39 thru 7-42	C
7-43 thru 7-48.4	D
7-49 thru 7-51	C
7-52/7-53	A
8-1	A
Comment Sheet	D
Mailer	-
Back Cover	-

PREFACE

This manual provides information to aid in the installation, checkout, and maintenance of the CDC® PLATO® Flexible Disk Subsystem. Information is provided for both on-site and technical support use. The subsystem provides flexible disk storage capability to a PLATO Information Systems Terminal (IST-II and IST-III).

Product and equipment number correlation for the various subsystem configurations and associated memory options is as follows:

Product Number	Equipment Number	Description
40003-203	FA501-A	PLATO Master Flexible Disk Subsystem, 60 Hz, 120 V ac.
40003-204	BR810-A	PLATO Slave Flexible Disk Drive, 60 Hz, 120 V ac.
40003-205	FA501-B	PLATO Master Flexible Disk Subsystem, 50 Hz, 220/240 V ac.
40003-206	BR810-B	PLATO Slave Flexible Disk Drive, 50 Hz, 220/240 V ac.
40003-200	XA243-A	Additional 16K by 8-bit RAM Option (up to three RAM options may be added).
40003-211	FT116-A	Terminator assembly for IST parallel I/O channel.

Organization of this manual is divided into eight major sections:

Section 1 - General Description
Section 2 - Operation
Section 3 - Installation and Checkout
Section 4 - Theory of Operation
Section 5 - Diagrams
Section 6 - Maintenance
Section 7 - Parts Data
Section 8 - Wire Lists

Other manuals providing reference and operator information on the flexible disk subsystem, maintenance information on the flexible disk drive assembly, and maintenance information on the IST terminal are listed as follows. All manuals may be ordered from:

Control Data Corporation
Literature and Distribution Services
304 North Dale Street
St. Paul, Minnesota 55103

Title	Publication Number
PLATO Flexible Disk Subsystem Hardware Operators Guide	62940005
9406 Flexible Disk Drive Assembly Hardware Maintenance Manual	77614903
Information Systems Terminal II Hardware Maintenance Manual (IST-II)	82100083
Information Systems Terminal III Hardware Maintenance Manual (IST-III)	62940007

In addition to these publications, an instructional flexible disk and user's installation guide are available as follows:

Micro Plato Instructional Flexible Disk	76773000
Micro Plato User's Installation Guide	76368339

The disk and the guide may be ordered, using an Education Order Form, from:

Order Administrator
Education Company
8100 34th Avenue South
P.O. Box 0
Minneapolis, Minnesota 55440

Disks for general use (formatted or unformatted) may be ordered by phoning as follows:

in Minnesota, Alaska, or Hawaii	612-830-7352	(call collect)
in other parts of United States	800-328-6207	(toll-free)
in Canada	416-291-7151	(call collect)

Note, these numbers are for ordering disks only.

In other countries, contact the nearest CDC Business Products representative.

The IST II and the IST III have been approved by the Federal Communications Commission (FCC) as not being harmful to the telephone network when connected directly to the telephone lines. Instructions for fully complying with Part 68, FCC Docket 19528 can be found in the Site and Support manuals that accompany the particular terminal being used.

CONTENTS

1. GENERAL DESCRIPTION

Subsystem Configuration 1-1
PLATO Master Flexible Disk Subsystem 1-2
PLATO Slave Flexible Disk Drive 1-2
RAM Expansion Feature 1-2
ROM Expansion Feature (Future Availability) . . . 1-2
Media 1-3
Equipment Specifications 1-4

2. OPERATION

Voltage Select Switch 2-1
Power On/Off Switch/Circuit Breaker 2-1
Device Address Switch (Master Units Only) 2-2
Master Reset Switch (Master Units Only) 2-2
Diagnostic Control Switches (Master Units Only) . . . 2-2
Switch 2^0 2-3
Switch 2^1 2-3
Switch 2^2 2-3
Switch 2^3 2-3
Switch 2^4 and 2^5 2-3
Switch 2^6 2-4
Switch 2^7 2-4
LED Indicators 2-4

3. INSTALLATION AND CHECKOUT

Packaging 3-1
Installation 3-1
Subsystem Installation 3-2
RAM Option Installation 3-6
Checkout 3-7

4. THEORY OF OPERATION

AC Power Entry Panel 4-2
Power Supply 4-2
Backplane 4-3
Flexible Disk Drive (FDD) Assembly 4-4
Controller Board (Master Units Only) 4-6
Z80A Microprocessor 4-8
9517A-4 Direct-Memory-Access (DMA) Controller . . 4-8
1791A-02 Flexible Disk Controller (FDC) 4-9
2716 Erasable Programmable Read-Only Memory (EPROM) 4-9
Z80 Counter/Timer Circuit (CTC) 4-10
9519 Interrupt Controller 4-11

External Interface Pin Assignments 4-12
Internal Connector Pin Assignments 4-12

5. DIAGRAMS

Schematic Diagram, 9BED 5-2
Schematic Diagram 9BKD (PFDS Power Supply) 5-18
Schematic Diagram (9BMD) (FDD Controller Backplane) . 5-21
50/60 Hz A.C. Power Wiring 5-22

6. MAINTENANCE

General Maintenance Information 6-1
Suggested Emergency Maintenance Procedure 6-1
Before Leaving for Customer Site 6-2
Upon Arriving at Customer Site 6-2
Safety Precautions 6-3
Maintenance Tools and Materials 6-3
MOS Circuit-Handling Precautions 6-3
Maintenance Aids 6-4
Location of Major Assemblies 6-4
Diagnostic and Corrective Maintenance 6-4
Diagnostic Self-Test Routines 6-4
LED Test 6-5
Test 0 - ROM Checksum 6-5
Test 1 - RAM Test 6-6
Test 2 - Interrupt Generator 6-6
Test 3 - Flexible Disk Controller 6-6
Test 4 - DMA Test 6-6
Test 5 - I/O Loopback Test 6-6
Test 6 - CTC Test 6-6
Test 7 - Writing and Reading the Disk 6-7
DIAG Flexible Disk Diagnostic Tests 6-7
Explanation of SAM Format 6-7
Organization of SAMs and Procedures 6-7
Procedure 1 - Power Application/Removal 6B-1
Procedure 2 - Flexible Disk Installation/
Removal 6B-2
Procedure 3 - Front Panel and Cabinet Hood
Removal/Replacement 6B-4
Procedure 4 - Controller Board Removal/
Replacement 6B-5
Procedure 5 - Power Supply Removal/Replacement. 6B-6
Procedure 6 - Disk Drive Unit Removal/
Replacement 6B-8

7. PARTS DATA

(Pre-Production Units Only)

SPL PLATO Flexible Disk Subsystem 7-3
SPL PLATO Slave Flexible Disk 7-5
Genealogy Chart PLATO Master Flexible Disk Subsystem
60 Hz 7-7
Genealogy Chart PLATO Slave Flexible Disk Drive 60 Hz 7-8
Genealogy Chart PLATO Master Flexible Disk Subsystem
50 Hz 7-9
Genealogy Chart PLATO Slave Flexible Disk Drive 50 Hz 7-10
PLATO Flexible Disk (TLA) 7-11
AC Entry Assy, Flex Disk 7-17

(Production Units Only)

SPL FA501A (60 Hz Master) 7-21
SPL FA501B (50 Hz Master) 7-23
SPL BR810A (60 Hz Slave) 7-25
SPL BR810B (50 Hz Slave) 7-27
Genealogy Chart (60 Hz Master) 7-29
Genealogy Chart (50 Hz Master) 7-30
Genealogy Chart (60 Hz Slave) 7-31
Genealogy Chart (50 Hz Slave) 7-32
PLATO Flexible Disk (TLA) 7-33
AC Entry Assembly 7-39

(Common Parts Data)

P.C. Card Assembly, 9BED 7-43
P.C. Card Assembly, 9BKD 7-48.4
P.C. Card Assembly, 9BMD 7-52

8. WIRE LISTS 8-1

FIGURES

1. GENERAL DESCRIPTION

1-1 PLATO Flexible Disk Subsystem 1-1
1-2 PFDS Master and Slave Unit Details 1-3

2. OPERATION

2-1 Control and Indicator Locations 2-1

3. INSTALLATION AND CHECKOUT

3-1 Flexible Disk Subsystem Packaging 3-2
3-2 Controller Board Switches and Indicators . . . 3-4
3-3 I/O Cable and Terminator Installation 3-5
3-4 RAM Option FCO Log and ID Tag Placement 3-6
3-5 Power Supply Voltage Indicators 3-7

4. THEORY OF OPERATION

4-1 Major Elements of Subsystem 4-1
4-2 Subsystem Block Diagram 4-2
4-3 Drive Assembly Functional Block Diagram 4-5
4-4 Controller Board Block Diagram 4-7
4-5 External Wiring of the CTC for Head-Load Timing 4-10
4-6 External Wiring of the CTC for Real-Time Clock 4-11
4-7 Flexible Disk Interrupt Network 4-12
4-8 Internal Connector Pin Assignments 4-15

6. MAINTENANCE

6-1 Location of Assemblies in Subsystem 6-5
6-2 SAM Example 6-8
6B-1 Power On/Off Switch Location 6B-1
6B-2 Diskette Installation/Removal 6B-2
6B-3 Front Panel and Cabinet Hood Mounting Details . 6B-4
6B-4 Controller Board Layout 6B-5
6B-5 Power Supply Voltage Adjustments 6B-7
6B-6 Disk Drive Unit Installation 6B-9
6B-7 Drive Pulley Details 6B-10

TABLES

1. GENERAL DESCRIPTION

1-1 Equipment Specifications 1-4

4. THEORY OF OPERATION

4-1 Parallel I/O Channel Pin Assignments 4-13
4-2 Slave Drive Unit Channel Pin Assignments . . . 4-14

7. PARTS DATA

7-1 Explanation of Column Headings on Assembly Parts Lists 7-1

PLATO HOTLINE

800-328-9114

For Minnesota only

612-482-2006

This section provides a general description of the PLATO Flexible Disk Subsystem (PFDS) configuration including the related equipment specifications. The PFDS is a Z80 microprocessor-based programmable storage subsystem that is intended for use by a PLATO Information Systems Terminal. The subsystem interfaces with the terminal via the PLATO parallel I/O channel. Refer to figure 1-1 for an exterior view of the subsystem.

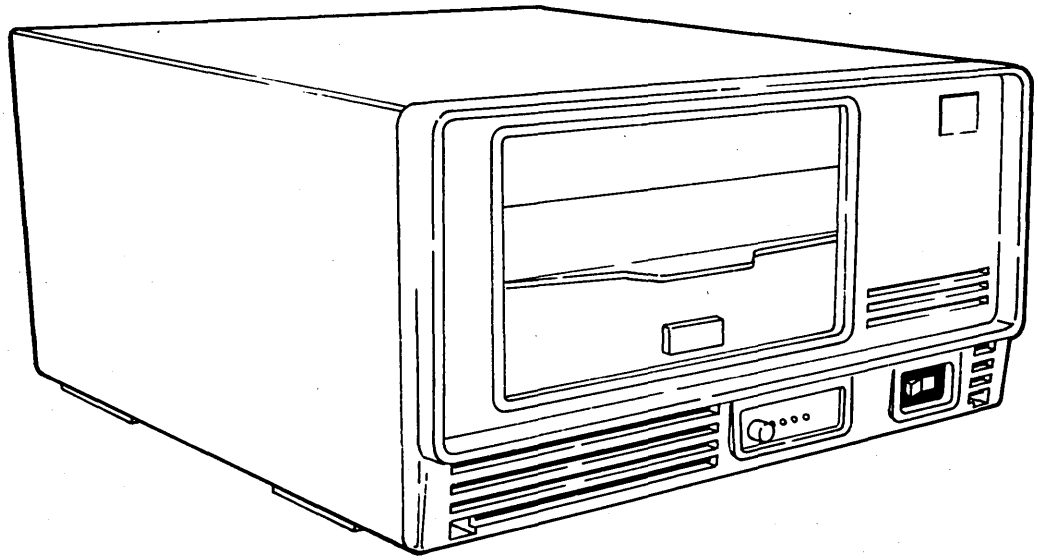

03892

Figure 1-1. PLATO Flexible Disk Subsystem

SUBSYSTEM CONFIGURATION

The PFDS is configured as two basic versions:

- PLATO Master Flexible Disk Subsystem
- PLATO Slave Flexible Disk Drive

Each version is available as either a 60-Hz or 50-Hz product/equipment. Refer to the preface for product/equipment number correlation.

The subsystem can consist of a single master unit or a master unit and one slave unit. The two units (master and slave) are interfaced by attaching the signal lines of both 9406 Disk Drives together via a 50-pin interconnecting I/O cable. The net effect is that the controller logic board of the master unit is interfaced to both 9406 Disk Drives connected in parallel as shown in figure 1-2.

PLATO MASTER FLEXIBLE DISK SUBSYSTEM

The PLATO Master Flexible Disk Subsystem contains a CDC 9406 Flexible Disk Drive, a 50-Hz or 60-Hz ac power entry panel, a mother-board backplane, a dc power supply, and a Z80-based controller logic board.

PLATO SLAVE FLEXIBLE DISK DRIVE

The PLATO Slave Flexible Disk Drive is identical to a master unit except that the Z80-based controller logic board is removed.

RAM EXPANSION FEATURE

The standard subsystem random-access memory consists of 16K 8-bit words. The RAM size may be expanded to a total of 64K 8-bit words in 16K-word increments. Each 16K RAM option consists of eight 16-pin integrated circuits (ICs). IC sockets are provided on the controller logic board for installation of the RAM chips.

ROM EXPANSION FEATURE (FUTURE AVAILABILITY)

The standard subsystem read-only memory consists of a two 2K by 8-bit EPROM that uses memory addresses 0000_{16} through $0FFF_{16}$.

MEDIA

The media that can be used in the subsystem are the CDC 423 (single-sided, double-density), CDC 425 (double-sided, double density), or CDC approved equivalents. These flexible disks have the following characterists:

- Index - 1
- Sectors - Programmable
- Cylinders - 77
- Tracks per cylinder - 1 for single-sided disk, 2 for double-sided disk.
- Surfaces - 2
- Tracks per inch 48
- Bits per inch - 6816 double density

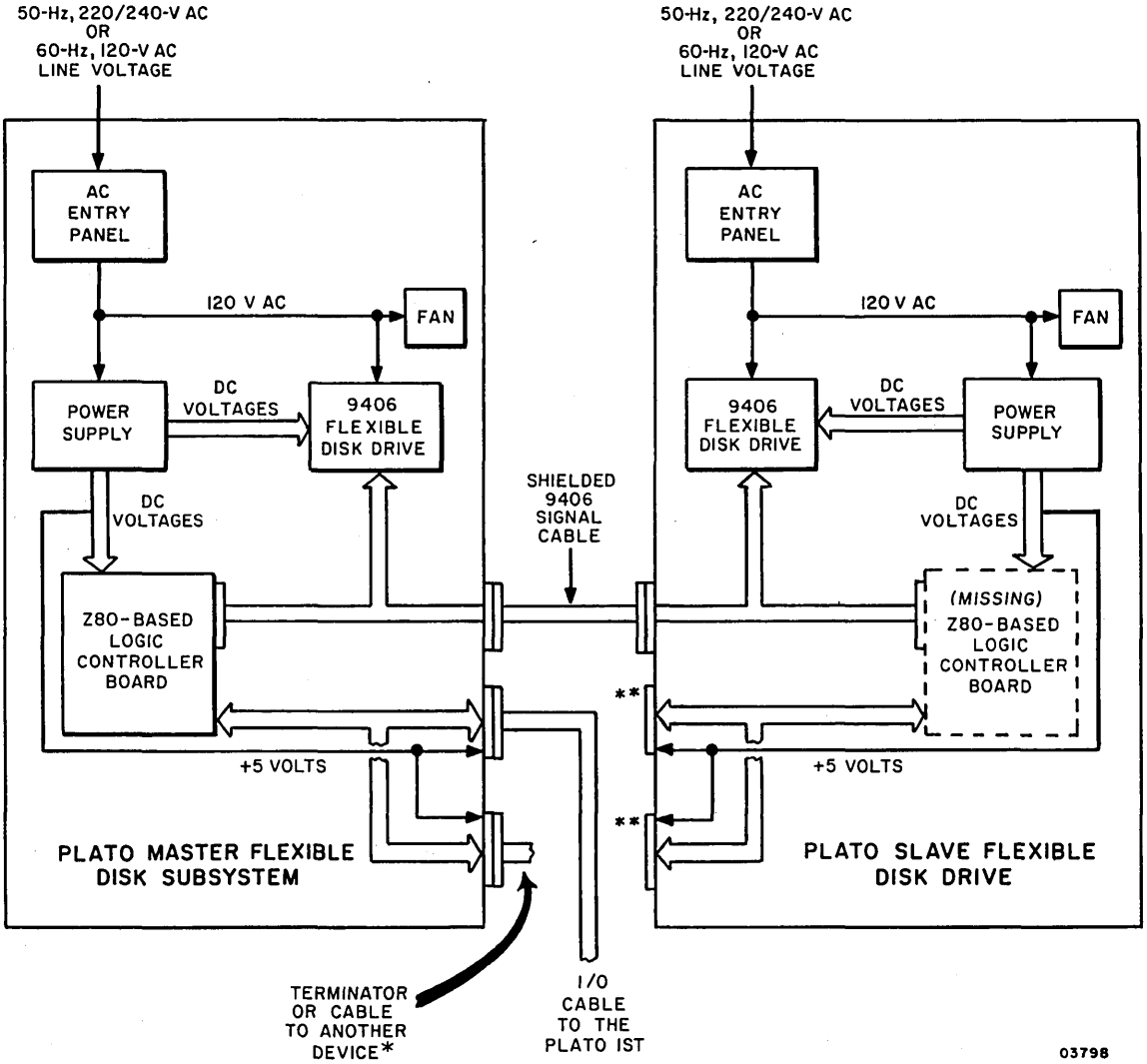

*The other device could be another PLATO Master Flexible Disk Subsystem, Graphic Printer, etc.
**These connectors are not used.

Figure 1-2. PFDS Master and Slave Unit Details

EQUIPMENT SPECIFICATIONS

Equipment specifications for the subsystem are listed in table 1-1.

TABLE 1-1. EQUIPMENT SPECIFICATIONS

CHARACTERISTIC	SPECIFICATION
Dimensions:	
Height	202.85 mm (7.99 in)
Width	381 mm (14.99 in)
Depth	502.5 mm (19.78 in)
Weight:	
FA501-A (60-Hz master)	16.78 kg (37 lb) maximum
FA501-B (50-Hz master)	20.19 kg (44.51 lb) maximum
BR810-A (60-Hz slave)	16.33 kg (36 lb) maximum
BR810-B (50-Hz slave)	19.73 kg (43.5 lb) maximum
Power Requirements: (Nominal)	
FA501-A	120 V ac, 60 Hz, 1.4 A, 0.18 kW maximum
FA501-B	220/240 V ac, 50 Hz, 0.8 A, 0.19 kW maximum
BR810-A	120 V ac, 60 Hz, 1.2 A, 0.16 kW maximum
BR810-B	220/240 V ac, 50 Hz, 0.68 A, 0.16 kW maximum
Temperature:	
Operating	10°C to 32°C (50°F to 90°F)
Nonoperating	-34°C to 66°C (-30°F to 150°F)
Change/h	6.7°C (12°F)
Relative Humidity:	
Operating	10% to 80%
Nonoperating	5% to 95%
Change/h	10%
Operating Altitude:	3000 m (9850 ft) maximum
Heat Dissipation (Air):	555 Btu/h (161.3 W) maximum, fan cooled

TABLE 1-1. EQUIPMENT SPECIFICATIONS (CONTD)

CHARACTERISTIC	SPECIFICATION
Disk Storage Capacity:*	Double Density
Bytes/Track	10 416
Bytes/Cylinder**	20 832
Bytes/Surface	802 032
Bytes/Diskette**	1 604 064
Bits/Byte	8
Transfer Rate:*	Double Density 500 k b/s 62.5 bytes/s
Seek Time:	3 ms
Head Stabilization Time:	20 ms
Head Load Time:	40 ms
Diskette Rotation:	360 r/min ±3.5%
Latency:	
Maximum	166.7 ms
Average	83.3 ms
Recording Method:	Modified Frequency Modulation (MFM)

*Storage capacity and data transfer rates are a function of the formatting used on the diskette and the programming of the controller.

**Applies to double-sided diskettes only.

This section describes the controls and indicators of the flexible disk subsystem. Locations are shown in figure 2-1. Refer to the Micro Plato user's installation guide and Micro Plato instructional flexible disk for information on associated operating programs (see preface for publication/part numbers).

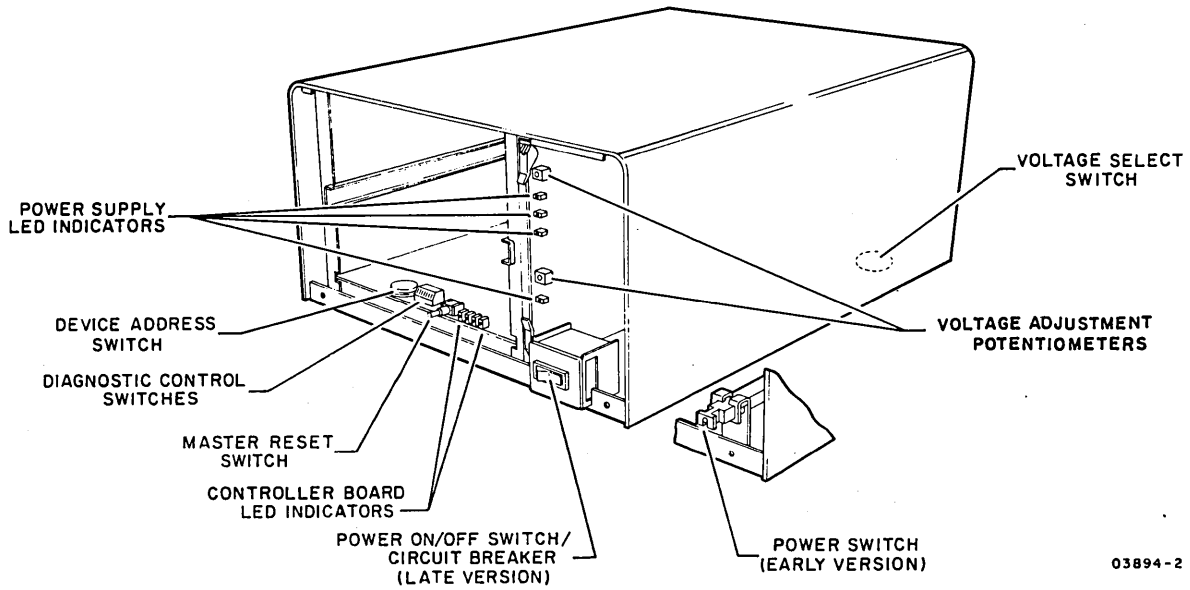

Figure 2-1. Control and Indicator Locations

VOLTAGE SELECT SWITCH

The voltage select switch is present on 220/240-V, 50-Hz units only. The switch is located on the bottom of the cabinet and selects taps on the transformer primary winding to match the input site voltage available. A metal plug covers the access hole.

POWER ON/OFF SWITCH/CIRCUIT BREAKER

Two versions of the Power On/Off switch/circuit breaker exist. Early units have the switch/circuit breaker mounted toward the

rear of the unit with a connecting rod attached to a push/pull control knob at the front of the unit. Power is applied by pulling the knob forward and power is removed by pressing the knob in. Later units have a rocker switch/circuit breaker mounted on the front of the unit.

A power application initializes all internal control logic circuits, and if bit 2^7 of the diagnostic control switches is down, initiates the self-test diagnostics.

The circuit breaker provides necessary overload protection for the subsystem.

DEVICE ADDRESS SWITCH (MASTER UNITS ONLY)

The subsystem device address is established by a 10-position binary-coded-decimal rotary switch at the front of the controller board. A slave unit is addressed by selecting Drive No. 2. This is accomplished by clearing operation control register bit 2^4. The master unit is selected by setting bit 2^4.

MASTER RESET SWITCH (MASTER UNITS ONLY)

Pressing the Master Reset switch reinitializes the operating program. Holding the switch pressed more than three seconds, reinitiates the self-test diagnostics (if selected), and reloads the operating program into RAM memory. The operating program is loaded from the flexible disk if available. If a flexible disk is not present, the flexible disk subsystem trys to load from the PLATO system.

DIAGNOSTIC CONTROL SWITCHES (MASTER UNITS ONLY)

There are eight switches on the front of the controller board that provide manual control of the program and self-test diagnostics. Diagnostic test descriptions are provided in section 6. Control functions selected by these switches are as follows:

SWITCH 2^0 - Not used

SWITCH 2^1

- Up - Allows result of detailed memory test to be displayed in LEDs per switch 2^2 setting.
- Down - Bypasses displaying result of detailed memory test selected by switch 2^2.

SWITCH 2^2

- Up - Allows failing memory IC within a RAM bank to be displayed in LEDs. Switch 2^1 must be in up position to view this display. Also note that for subsystems having more than 16K of RAM, failing memory bank must first be determined by having switch 2^2 down.
- Down - Allows failing memory bank to be displayed in LEDs. Switch 2^1 must be in up position to view this display.

SWITCH 2^3

- Up - Bypasses test 7 (write/read on disk) of diagnostics.
- Down - Enables execution of diagnostic test 7.

SWITCH 2^4 and 2^5

These switches define what banks of RAM are installed:

Switch 2^5	Switch 2^4	RAM BANKS AVAILABLE	ADDRESS RANGE (HEX)
Down	Down	1 (16K)	4000 - 7FFF
Down	Up	1, 2 (32K)	4000 - BFFF
Up	Down	1, 2, 3 (48K)	4000 - FFFF
Up	Up	0, 1, 2, 3 (64K)	0000 - FFFF

SWITCH 2^6

- Up - Allows looping on diagnostic tests.
- Down - Does not loop on diagnostics.

SWITCH 2^7

- Up - Bypasses diagnostic test execution.
- Down - Enables execution of the diagnostics except when switch 2^0 is up.

LED INDICATORS

Master units have four red LED indicators on the controller board that are visable through holes in the front panel. The LEDs are used by the self-test diagnostics to indicate detected errors. LED 2^3 (leftmost) indicates a diagnostic error and LEDs 2^0 through 2^2 identify the failing memory bank or IC as determined by the settings of switch 2^0, 2^1, 2^2, and 2^7 of the diagnostic control switches.* At successful completion of the diagnostics, LED 2^0 is assigned as the power-on indicator. These LEDs are also user programmable.**

Both master and slave units have four red voltage LEDs on the power supply PC board. The front panel must be removed to view the indicators. These LEDs indicate presence of +24 V, +12 V, +5 V, and -5 V at the power supply outputs. Note that a lit LED does not conclusively indicate that the correct voltage is present, only that there is sufficient voltage to bias the device on.

Two adjustment potentiometers are also on the power supply PC board. These provide for adjusting the +24-V and +5-V power supply outputs.

---

*LEDs 2^0 through 2^2 define which test section has failed. If diagnostic control switch 2^1 is up and there is a memory error, then LEDs 2^0 through 2^2 identify the failing memory bank or IC depending on setting of switch 2^2.

**After completion of the self-test diagnostics, the operating system uses LED 2^3 as an Error indicator, LED 2^2 as a Read indicator, LED 2^1 as a Write indicator, and LED 2^0 as a Power-on indicator.

This section provides information on packaging, installation, and checkout of the flexible disk subsystem.

CAUTION

Observe MOS circuit handling precautions (described in section 6 of this manual) when handling or packaging the controller board.

PACKAGING

The flexible disk subsystem is packaged for shipment using foam-in-place chemicals (figure 3-1). If the subsystem is to be reshipped it must be packaged as it was originally received from the factory. Use the existing packing materials or if not available, order new packing materials from CDC Corporate Traffic. Request pre-formed packing materials for the FA501/BR810 per packing instructions 41039800. Packaging materials may be obtained from:

Control Data Corporation
Corporate Traffic
8100 34th Avenue South
Minneapolis, Minnesota 55440

When returning other assemblies for repair, use the packaging material that the spared assembly was shipped in.

NOTE

When shipping any disk drive be sure to insert the cardboard head-protect flexible disk into the drive unit.

INSTALLATION

This subsection provides information for installing the flexible disk subsystem (master and slave units) and for field installation of the RAM options applicable to a master unit.

NOTE

Selective FCO CD14283 must be installed if the disk is to be used on an IST-II with a serial number below 3000. This FCO provides a new ROM with a disk loader. The part number for FCO CD14283 is 66202932.

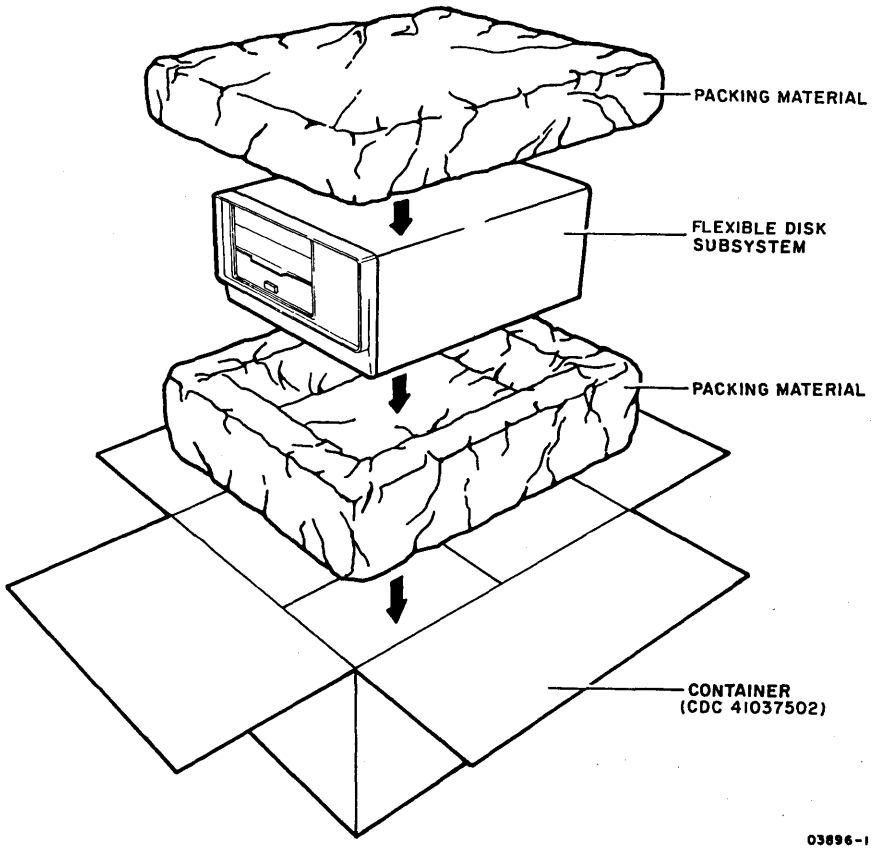

Figure 3-1. Flexible Disk Subsystem Packaging

SUBSYSTEM INSTALLATION

Install the flexible disk subsystem per the following. Procedure numbers used in the steps refer to specific procedures contained in section 6B of this manual.

1. Unpackage subsystem (refer to figure 3-1), and move to desired location. Remove cardboard head-protective flexible disk from drive unit and store with subsystem packaging materials. Note that slave unit may be stacked on top of master unit or master unit may be stacked on top of slave unit or units may be placed side-by-side if desired.

2. Inspect for any shipping damage.

3. For 50-Hz units, verify that Voltage Select switch (bottom of cabinet, metal plug covers access hole) is set

correctly to match site ac primary input voltage as follows:

Switch Position	Voltage Range
120 V	Not Used
220 V	191 V to 235 V
240 V	208 V to 257 V

NOTE

Cover unused voltage designation on ID plate (figure 3-4) with black tape.

4. This step applies to master flexible disk units only. Remove front panel of unit (procedure 3) and locate switches at front of controller board (figure 3-2).

   - Set Device Address Switch to address 7 if only one master unit is being installed or to desired device address (address must not match address of any other device on same parallel I/O channel) if more than one master unit is present. Address is determined by system software (see site director).

   - Set Diagnostic Control Switches as follows:

     Switch 2^0 - Not used

     Switch 2^1 - Down (bypasses displaying result of detailed memory test selected by switch 2^2).

     NOTE

     Switch 2^1 must be down to display the failing test number in the LEDs. If a test 1 (memory test) failure is detected, place switch 2^1 up to display the specific memory bank or IC failure as selected by switch 2^2.

     Switch 2^2 - Down (allows failing memory bank to be displayed in LEDs).

     Switch 2^3 - Up (disables running test 7 of resident diagnostics).

     Switch 2^4 and 2^5 - Set to RAM memory size available as follows (each XA243-A option adds 16K of RAM):

Switch 2^5	Switch 2^4	RAM Size
Down	Down	16K (Standard)
Down	Up	32K (Option)
Up	Down	48K (Option)
Up	Up	64K (Option)

Switch 2^6 - Down (does not loop on diagnostics).

Switch 2^7 - Down (enables running diagnostic tests).

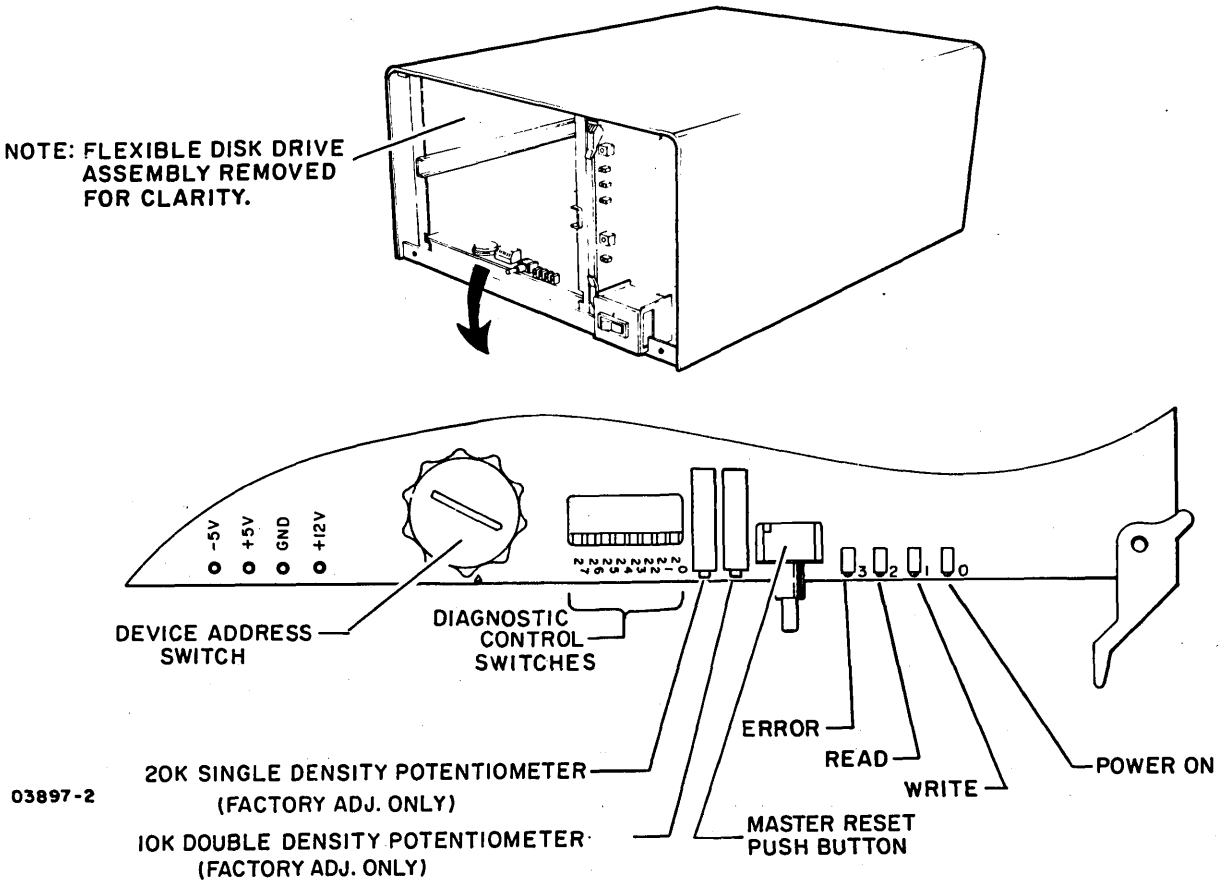

Figure 3-2. Controller Board Switches and Indicators

5. Refer to figure 3-3 and install I/O cable and terminator assembly per the following as applicable:

NOTE

A standard 25-pin RS-232-C compatible cable CANNOT be substituted for the specified I/O cable.

- Master flexible disk unit - If there are no other devices attached to IST parallel interface channel, connect 25-pin I/O cable (CDC 61408865) from parallel interface channel of IST terminal to either 25-pin I/O connector at rear of flexible disk unit. Connect terminator assembly (type FT116-A) to other 25-pin I/O connector of drive unit. Tighten retaining screws to hold cable connectors in place.

If other devices are already attached to IST parallel interface channel, remove terminator assembly from last device on channel and connect 25-pin I/O cable (CDC 61408865) between last device and either 25-pin connector at rear of flexible disk unit. Install the terminator assembly to other I/O connector of drive unit. Tighten retaining screws to hold cable connectors in place.

- Slave flexible disk unit - Connect 50-pin I/O cable (CDC 61408976) between 50-pin connectors of master and slave flexible disk units. Note that 25-pin I/O connectors are not used on slave unit.

- Verify that no flexible disk is installed in drive unit(s).

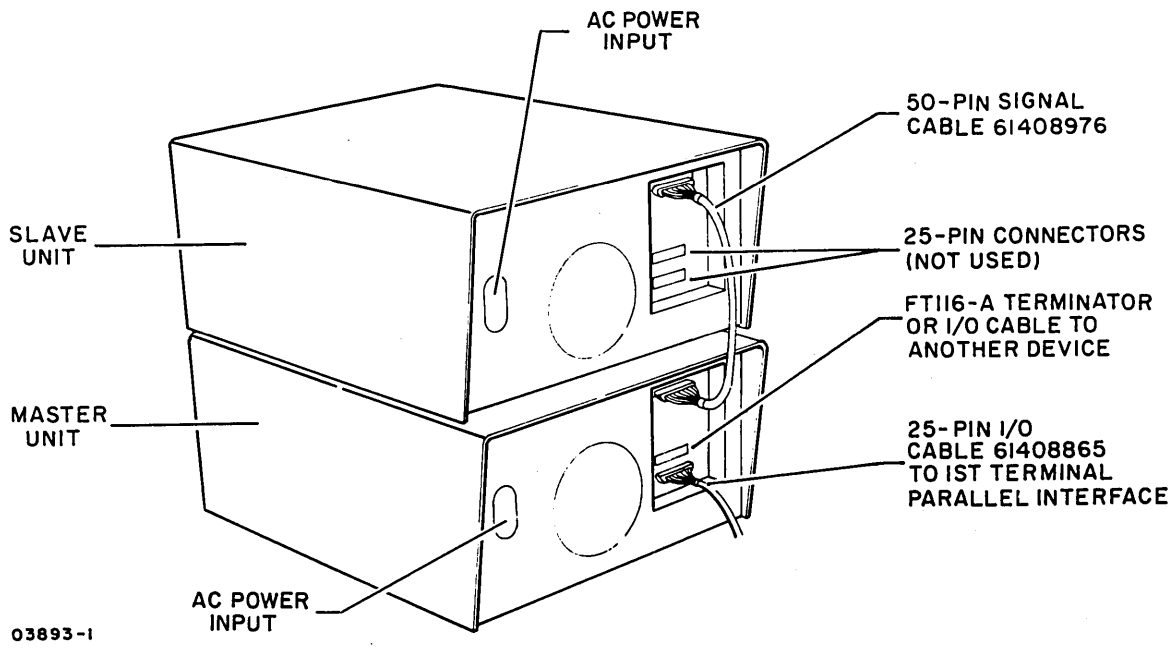

Figure 3-3. I/O Cable and Terminator Installation

6. Connect ac power cord to rear of unit, check that power on/off switch is in off position and plug ac line cord into site outlet.

WARNING

Applying improper voltage to the flexible disk subsystem can damage components. Read label on back of unit for proper voltage and frequency.

RAM OPTION INSTALLATION

Perform the following steps to install a 16K by 8-bit RAM option (XA243-A). Up to three RAM options can be installed in a master unit to expand the memory size to a total of 64K 8-bit words. Observe MOS circuit handling precautions described in section 6 when installing RAM ICs.

1. Remove controller board from unit.

2. Install RAM ICs in existing sockets on controller board as follows:

   - First RAM option in locations C1, C2A, C2B, C3, C4A, C4B, C5, and C6.

   - Second RAM option in locations D1, D2A, D2B, D3, D4A, D4B, D5, and D6.

   - Third RAM option in locations A1, A2A, A2B, A3, A4A, A4B, A5, and A6.

3. Set Diagnostic Controls Switches 2^4 and 2^5 to total RAM size available (see step 4 of Subsystem Installation for required switch settings).

4. Reinstall controller board in unit.

5. Afix FCO log and equipment identification tag to rear of unit as shown in figure 3-4.

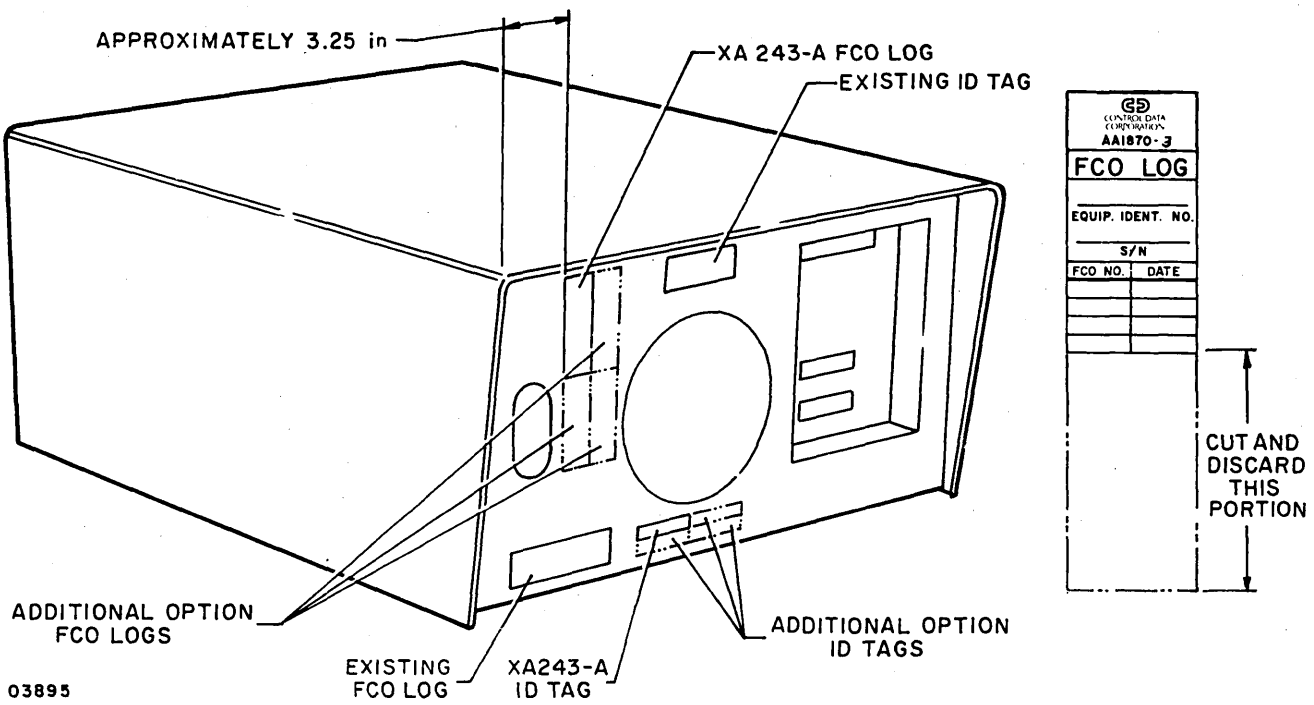

Figure 3-4. RAM Option FCO Log and ID Tag Placement

CHECKOUT

Perform the following steps to checkout the operational capability of the flexible disk subsystem including any installed options. If any problems are encountered, refer to the SAM listings in section 6A for corrective action.

1. Apply power to disk subsystem (procedure 1) and verify that four LEDs on power supply are lit (figure 3-5).

2. Observe four LEDS at front of controller board (figure 3-2). Immediately after turning power on (at start of diagnostic test execution) all four LEDs are turned on for a short period of time as an LED test. As the self-test diagnostic executes, the lower three LEDs indicate which test is in process. LED 2^3 lit indicates a diagnostic test error. Note that with no flexible disk installed, LEDs 2^0, 2^1, and 2^2 should be lit and LED 2^3 should be unlit indicating that diagnostic is at test 7 but drive is not ready.

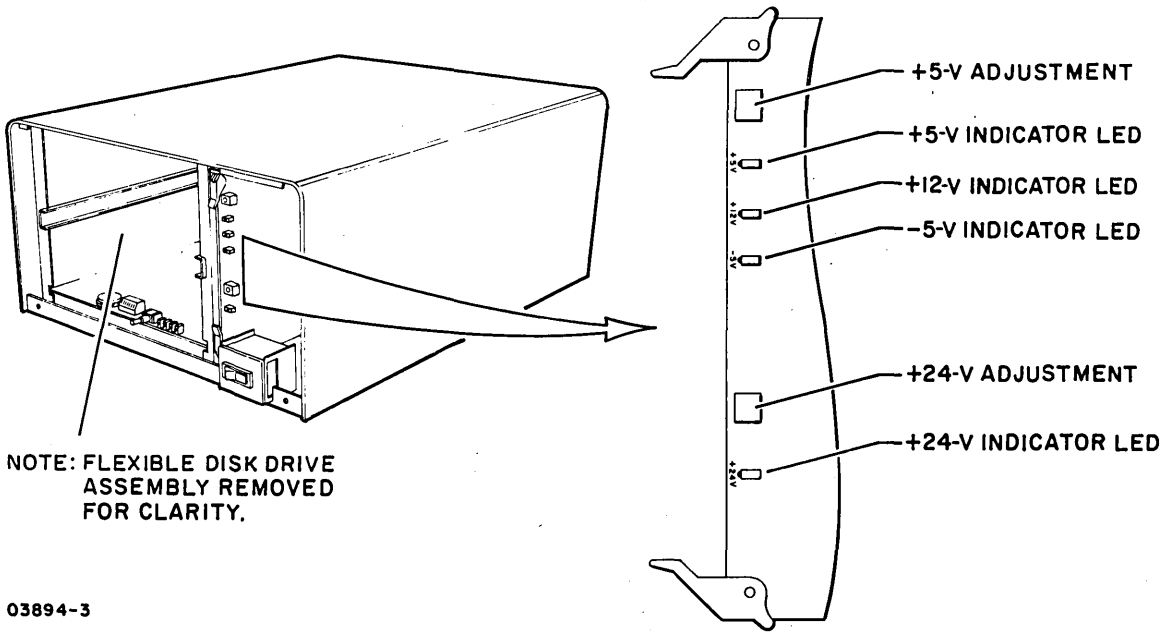

Figure 3-5. Power Supply Voltage Indicators

3. Install Micro Plato instructional flexible disk (CDC part number 76773000)* in drive unit (procedure 2). This initiates write/read checks of test 7 (last resident diagnostic test). Upon successful completion, LED 20 remains lit and functions as a power-on indicator.

4. Remove Micro Plato instructional flexible disk from drive unit.

5. Verify that power is applied to last peripheral device connected to parallel interface channel. Note that last device must be powered on for correct operation of parallel interface channel as this device provides +5 volts to terminator.

6. Load and execute DIAG Flexible Disk Diagnostics from IST terminal as follows:

NOTE

The DIAG Flexible Disk Diagnostics only work with IST display terminals having a 16K memory option.

NOTE

There are two modes of operation in the flexible disk subsystem that allow the terminal to load information into subsystem memory. One mode is via DMA operations and the other mode is via interrupt routines. Both operating modes are tested by the DIAG Flexible Disk Diagnostics.

For terminal log-in or diagnostic loading problems, refer to the applicable terminal hardware maintenance manual (see preface for publication number).

---

*A single-density formatted flexible disk (CDC part number 66312995) is provided on an interim basis that can be used in place of the Micro Plato instructional flexible disk for initial subsystem checkout.

a. Use assigned log-in procedure and select Flexible Disk Diagnostics found under DIAG. When selected, crt displays:

Flexible Disk Diagnostics
Now Loading Local Programs

This loads a controlware program into memory of terminal that allows terminal to communicate with flexible disk subsystem.

b. At completion of local programs load, crt displays:

Now Loading Flexible Disk Subsystem

This loads a second controlware program into memory of IST terminal, which loads same program into flexible disk subsystem memory via DMA operations. This second program is required by flexible disk subsystem to allow its internal Z80 CPU to interpret commands from IST terminal in order to perform additional testing of flexible disk subsystem.

c. At completion of flexible disk subsystem load, crt displays:

Good Load (or Disk System Not Ready to Load)

If Incorrect Load Please Try Option Ten (10) And Long Master Clear of FDSS. If Good Load Please Put Disk Into Unit Now.

Choose Which FDSS Diagnostic You Want to Run

1. Seek Test
2. Terminal/FDSS Communication Check
3. Device Address Test
4. Media Test
5. Test Number of Sides
6. Head Loaded Test
7. Terminal Interrupt Test
8. Line Sync Test
9. Index Pulse
10. Try Loading Again

Install diskette in drive unit to be tested or retry loading again per option 4 as applicable.

NOTE

Flexible disk must be installed only in device to be tested. For example, if testing slave unit, remove flexible disk from master unit and install in slave.

d. Make appropriate keyboard entry for action desired.

- If test 1 (Seek Test) is selected, crt displays:

  Is your disk single or double density?

  1. Single
  2. Double

  What Side Do You Want to Seek? (0 or 1)

  What Track Do You Want to Seek? (0 to 76)

  Enter values for desired side and track. Upon completion of a track seek, crt displays:

  Good Seek (or Bad Seek)
  Test Completed
  Press Next to Continue

- If test 2 (Terminal/FDSS Communication Check) is selected, terminal sends a 256-byte block of data to subsystem memory. Subsystem returns data block and terminal checks for correct content. Upon completion, crt displays:

  Comm Line OK (or type of error, such as Status Error, Data Error, etc.)

  Test 2 writes to, and reads from, subsystem memory via interrupt mode. This assures that both operating modes (DMA and interrupt) are working OK.

- If test 3 (Device Address Test) is selected, crt displays:

  What Channel Number do You Want to Check? (If Communications Are Established Test Will be Good, If Communications Are Not Established Test Will Fail. Channel Numbers Are 0 - 9 With Channel 7 Being The Normal One).

Enter assigned device address of flexible disk subsystem. Upon completion, crt displays:

> Comm Line OK (if device address check is OK, or Status Error if device address entered does not match device address of FDSS).

- If test 4 (Media Test) is selected, crt displays:

  > Is your disk single or double density?
  >
  > 1. Single
  > 2. Double

  This test takes about three minutes to run. If the disk has a media problem the error LED (2^3) will come on. Press NEXT to perform this test.

  Upon completion, crt displays:

  > GOOD DISK OR BAD DISK

  Then press NEXT to select a new test.

- If test 5 (Test Number of Sides) is selected, crt displays:

  > If a write fault status exists, LED 2^3 (Error) will go on. If not, all LEDs will remain unlit. Press NEXT to perform this test.

  Execute test 5 per display prompts and observe result.

- If test 6 (Head Loaded Test) is selected, crt displays:

  > If the head will not load correctly, LED 2^3 (Error) will come on. If head loads correctly, all LEDs will remain unlit.
  >
  > Press NEXT to perform this test.

  Execute test 6 per display prompts and observe result.

- If test 7 (Terminal Interrupt Test) is selected, crt displays:

  INTERRUPT OCCURRED (or NO INTERRUPT if test fails)

  Press NEXT to continue.

  Observe test 7 result and press NEXT to continue.

- If test 8 (Line Sync Test) is selected, crt displays:

  If the line sync will not work, LED 2^3 (Error) will come on. If line sync will work, all LEDs will remain unlit. Press NEXT to perform this test.

  Execute test 8 per display prompts and observe result.

- If test 9 (Index Pulse Test) is selected, crt displays:

  If there is no index pulse, LED 2^3 (Error) will come on. If there is an index pulse, all LEDs will remain unlit. Press NEXT to perform this test.

  Execute test 9 per display prompts and observe result.

7. After successful completion of preceding tests, check that all diagnostic control switches on controller board are set as required and reinstall front panel of unit (procedure 3). If Micro Plato instructional flexible disk (CDC part number 76773000) is being used, additional testing can be performed through use of stored programs on this disk. Refer to Micro Plato User's Installation Guide for test information (see preface for publication number).

7. After successful completion of preceding tests, check that all diagnostic control switches on controller board are set as required and reinstall front panel of unit (procedure 3). If Micro Plato instructional flexible disk (CDC part number 76773000) is being used, additional testing can be performed through use of stored programs on this disk. Refer to Micro Plato User's Installation Guide for test information (see preface for publication number).

This section provides a functional description of the five major elements of the flexible disk subsystem:

- AC Power Entry Panel
- Power Supply
- Backplane
- Flexible Disk Drive (FDD) Assembly
- Controller Board (Master Units Only)

Also provided are the connector pin assignments for the external parallel I/O channel and slave flexible disk unit interfaces, and the connector pin assignments for the internal signals of the flexible disk subsystem.

Refer to figure 4-1 for location of the major elements within the subsystem and to figure 4-2 for a block diagram of the subsystem configuration.

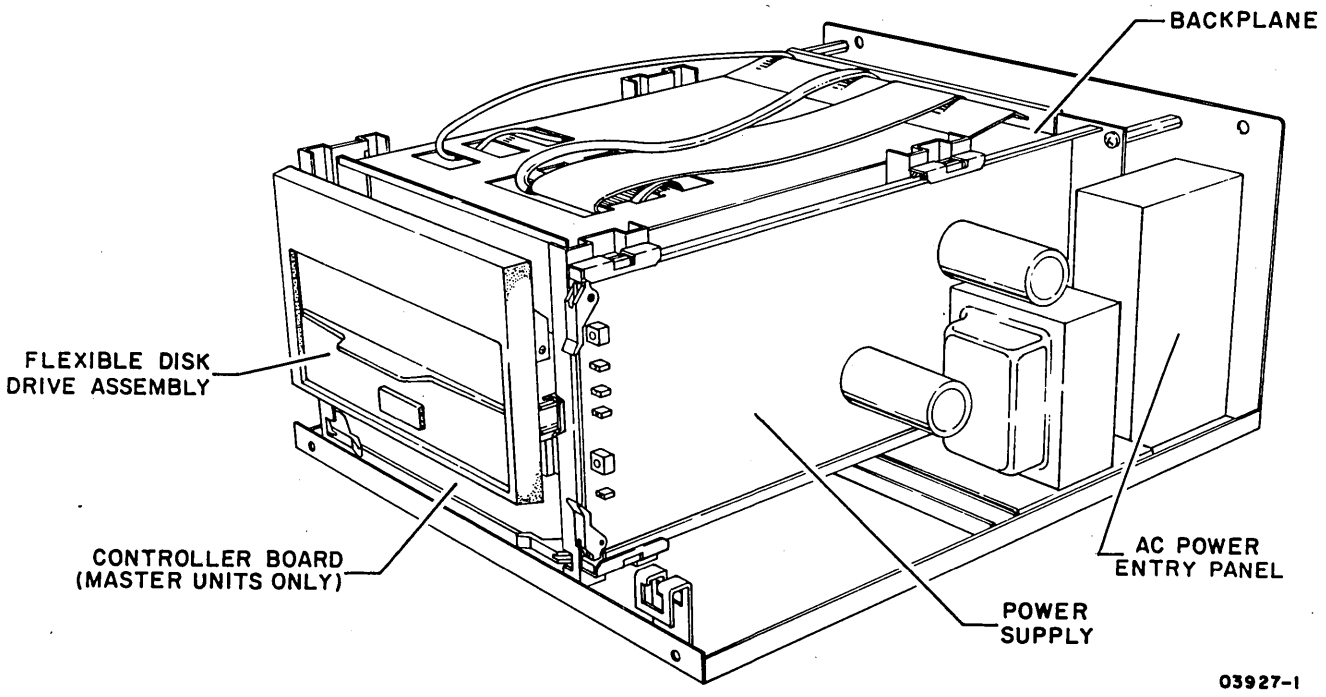

NOTE: COVER AND FRONT PANEL REMOVED FOR CLARITY.

Figure 4-1. Major Elements of Subsystem

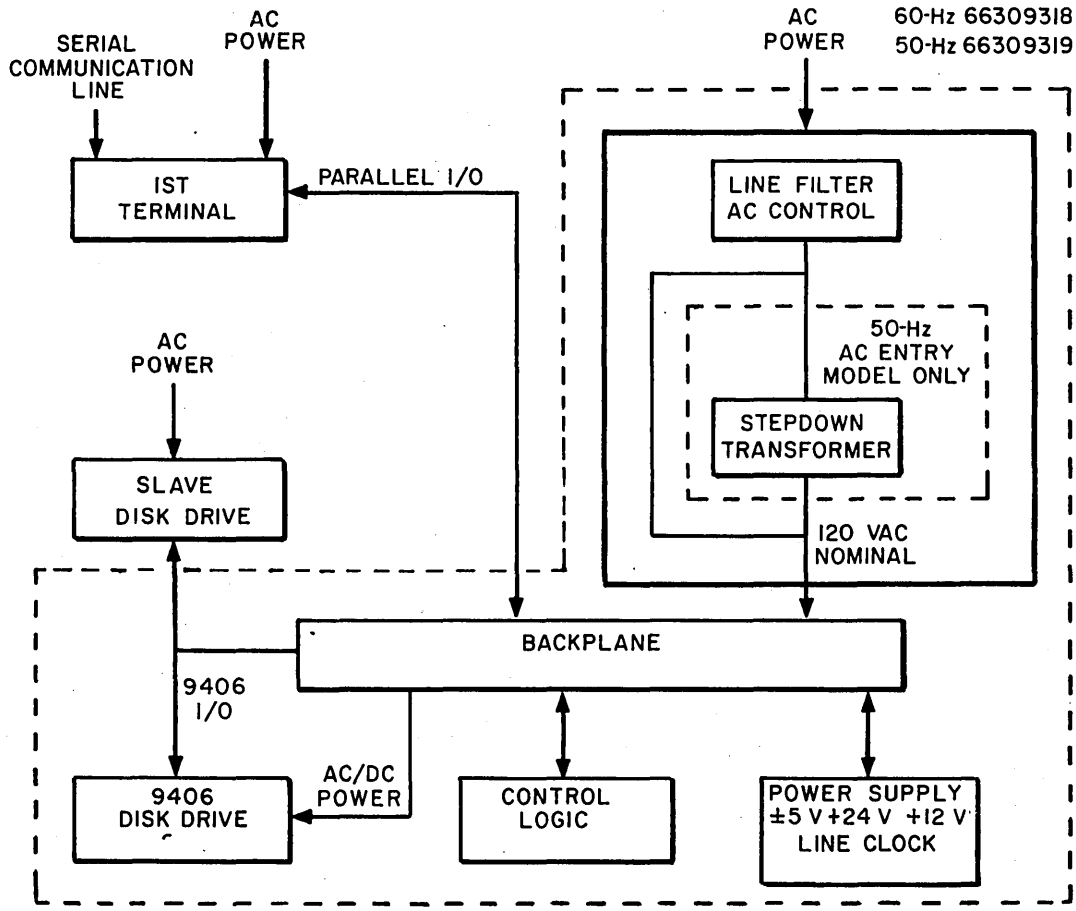

Figure 4-2. Subsystem Block Diagram

AC POWER ENTRY PANEL

The ac power entry panel contains an RFI line filter and a detachable ac power cord. A separate ac power entry panel is used for the 60-Hz and 50-Hz equipments. The 50-Hz panel also contains a step-down transformer and a 220/240-volt selector switch. Early versions of both the 60-Hz and 50-Hz panels contained the primary power circuit breaker. Later versions have the circuit breaker mounted at the front of the unit.

POWER SUPPLY

The power supply is a switching supply contained on a single PC card. Input voltage is 120 V ac nominal. The 50-Hz units require an external step-down transformer (provided by the 50-Hz ac entry panel) to lower the 220-V/240-V ac input voltage to 120 V. The power supply provides the following nominal dc output voltages and full-load currents:

- +12 V at 0.45 A
- -5 V at 0.1 A
- +5 V at 5 A
- +24 V at 2 A

The power supply is divided into two basic sections, a +24-V section, and a logic voltage section for the +12-V, +5-V, and -5-V output voltages. All dc outputs have over-current protection and are not damaged by short circuits. The +5-V output has an over-voltage sensing circuit that shuts off all outputs when the +5-V output rises between +5.5 V to +6.0 V. No other outputs have over-voltage protection.

The input ac line voltage is full-wave rectified and is chopped at a high-frequency rate (25 to 40 kHz) through the primary of the input transformer by a switching transistor. The transformer steps down the high-frequency ac to the secondary windings. These ac voltages are then rectified and filtered to provided the various power supply outputs.

Voltage control is performed in each power supply section by a regulator IC that compares a sample of the output voltage to an internal reference voltage. A resulting error difference is used to control the conduction time of a switching transistor through an optical coupler. Only the +24-V and +5-V output voltages are sensed to control the switching transistor pulse width in their respective power supply section. All other outputs have 3-pin IC regulators to regulate their output voltages.

The power supply contains four red board-edge LEDs that indicate the presence of the +24-V, +12-V, +5-V, and -5-V outputs. Two adjustment potentiometers are also provided for adjusting the +24-V and +5-V outputs. Test points on the board edge of the controller board are to be used when performing the +5-V alignment procedure. The +12-V, +5-V, and -5-V test points are available on the controller board edge.

BACKPLANE

A printed-circuit mother-board backplane provides the internal signal and power connections for the various modules of the disk subsystem and provides the external I/O channel interface connections.

FLEXIBLE DISK DRIVE (FDD) ASSEMBLY

The flexible disk drive (FDD) assembly is a random-access, data-storage device that writes and reads data from a rotating flexible disk. All input/output data and control operations are performed under microprocessor control from the controller board. The basic function of the drive assembly is to indicate to the controller when it is ready for operation, and respond to controller commands to:

- Receive and generate control signals
- Position the read/write heads to selected tracks
- Write or read data on the flexible disk when selected

Signals received and transmitted by the FDD are shown in figure 4-3. All signals received by the FDD are gated with Unit Select so that no stepping, reading, or writing can be performed on an unselected FDD. Also, all signals generated within the FDD, except the Ready signal, are gated with Unit Select so that no signals can be transmitted from an unselected FDD.

Controller Step and Direction commands initiate a track-seek operation on a selected FDD. The FDD transmits Index pulses as long as it selected. The selected FDD also transmits a Track 00 signal to the controller whenever the read/write heads are at Track 00.

Positioning of the carriage-mounted read/write heads is accomplished by a band-driven stepper motor. Each step command increments the stepper motor which moves the band. The band increments the read/write heads one track position for each step command.

During a write operation, the selected FDD receives Head Select, Write Enable, Write Data, and Low Current (Track 43 or greater) signals. If a write fault occurs, a Write Fault signal is transmitted to the controller. During a read operation, the selected FDD receives a Head-Load command. The Write Enable line remains high thereby specifying a read operation and the FDD transmits Composite Read Data signals to the controller.

A read or write operation begins by placing the read/write heads in contact with the flexible disk with a Head-Load command at the desired track. To write on the disk, a Write Enable is sent by the controller to condition the write logic. The write current then in the head reverses polarity synchronously with

the low-to-high transitions of the Write-Data pulses from the controller. The current reversals cause magnetic flux reversals on the desired disk track. Erasure of previously recorded data is simultaneously accomplished during the writing operation in addition to a delayed-tunnel erase, which ensures disk interchangeability.

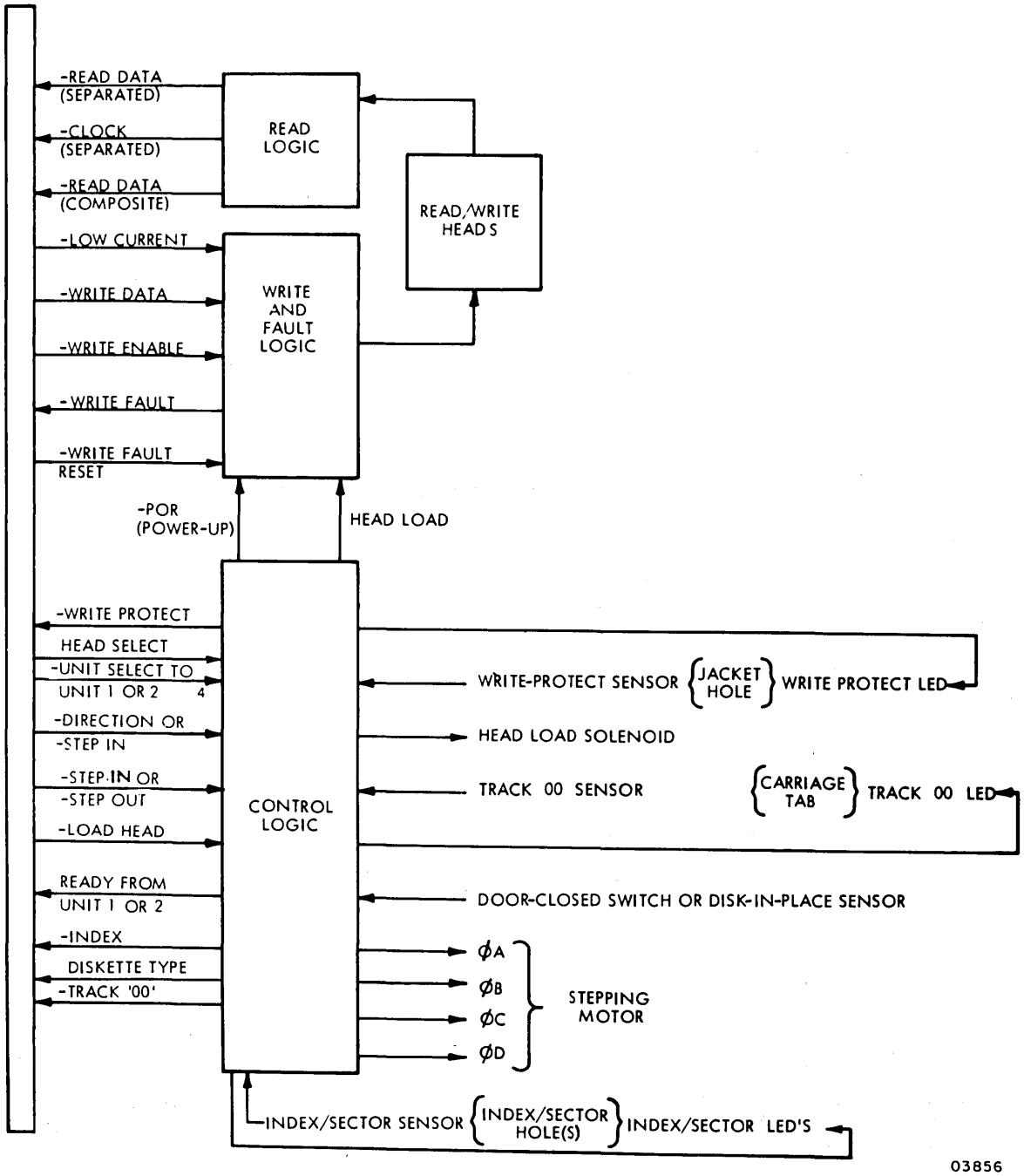

Figure 4-3. Drive Assembly Functional Block Diagram

To read from the flexible disk, magnetized bits in the format of the pre-recorded data are sensed by the read/write heads. This signal is amplified, digitized, and transmitted to the controller.

Refer to the 9406 Flexible Disk Drive Assembly Hardware Maintenance manual for additional information (see preface for publication number).

CONTROLLER BOARD (MASTER UNITS ONLY)

The controller board is present only in the master units. A single controller board provides control and directs all operations of both a master and optional slave unit. This is accomplished by interfacing the controller board to both 9406 Disk Drive assemblies (master and slave) connected in parallel via an external 50-pin signal cable.

Large-scale integrated circuits (LSI) are used in all major areas of the controller's operation. This includes:

- A Z80A microprocessor clocked at 4 MHz.
- A 9517A-4 direct-memory-access (DMA) controller.
- A 1791A-02 flexible-disk controller (FDC).
- Two 2716 (2K by 8-bit) eraseable programmable read-only memorys (EPROM).
- A Z80 Counter/timer circuit (CTC).
- A 9519A interrupt controller.
- 16K by 8-bit bytes of random access memory (RAM). IC sockets are available for expansion to 64K by 8-bits.
- Three 74LS374 8-bit data latches for I/O data, status, and commands.

The controller board also includes eight switches that can be read by the microprocessor for control and option-available information, a device address switch for the PLATO parallel I/O channel, a master reset switch that provides its status to the control program, and four LEDs that provide visual status indications.

A detailed block diagram of the controller board is shown in figure 4-4. The following paragraphs describe the major logic circuits. Refer to the applicable vendor manuals for details of operation as required.

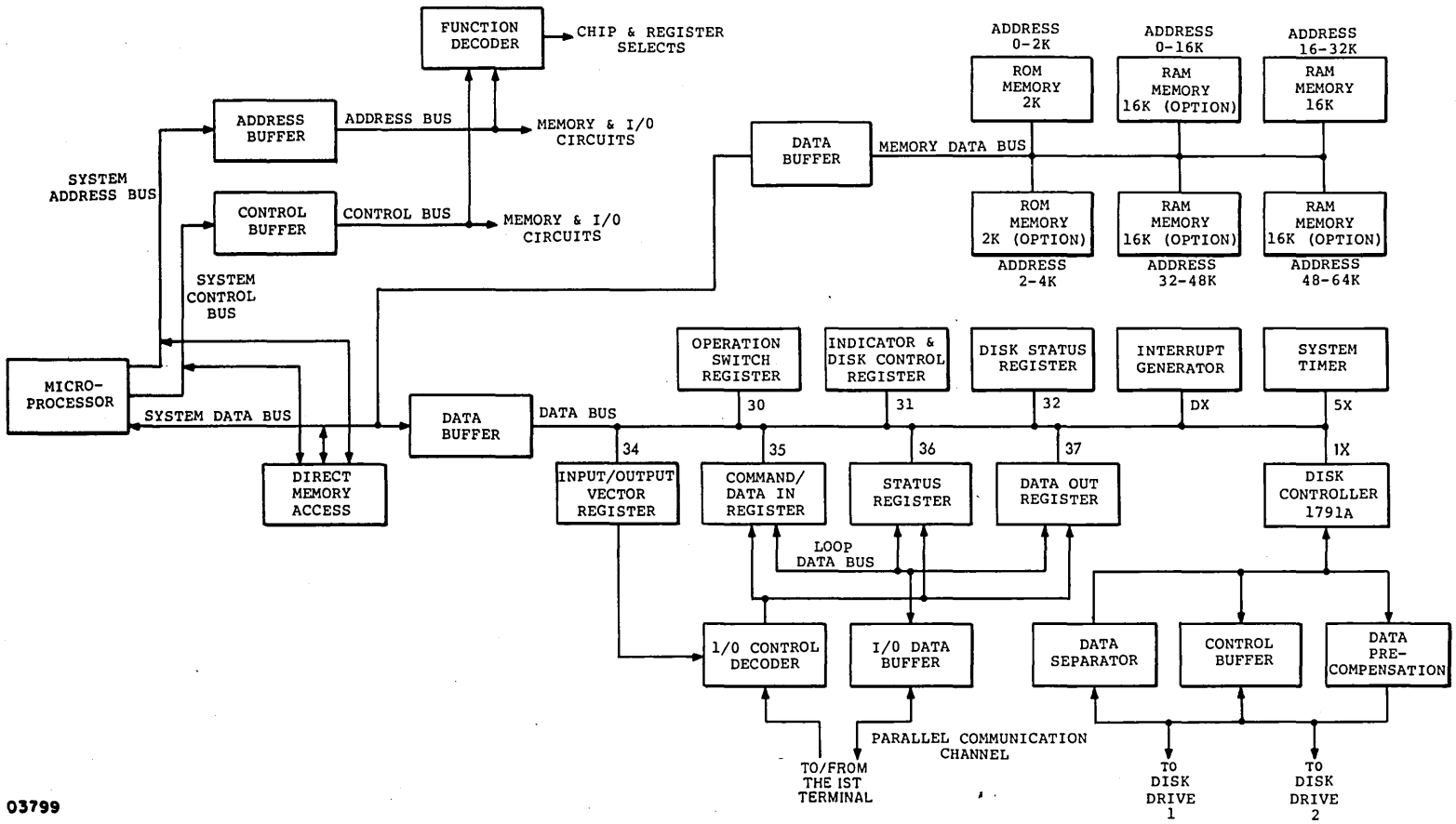

Figure 4-4. Controller Board Block Diagram

Z80A MICROPROCESSOR

A Z80A microprocessor is used as the major control element of the module. The Z80 provides three major buses (16-bit address bus, 8-bit bi-directional data bus, 13-line control bus); 158 different instructions; 208 bits of read/write memory; two sets of data, control, and address registers; an arithmetic and logic unit (ALU); and necessary instruction decode and control logic.

As each instruction is read from memory, it is placed in an instruction register and decoded. The internal control logic performs this function and then generates all the necessary control signals to read/write data from or to the registers, controls the ALU, and provides all required external control signals.

All instructions are executed by stepping through a specific series of basic control operations applicable to a given instruction.

Each basic control operation - such as OP code fetch, memory read, memory write, etc. - takes from three to six clock periods to complete and may be lengthened to synchronize the CPU to the speed of external devices. The additional clock periods are termed wait states and increase the total instruction execution time accordingly. The CPU examines the Wait line during T2 (and every subsequent TW) of each machine cycle and adds in a wait state of one clock period if the Wait signal is active.

Accessing RAM memory on the controller board does not require any addition of wait states. The EPROM memory, used only for the initial power-on diagnostics and autoload, requires the addition of one wait state for each memory reference. The 1791A flexible disk controller requires one wait state for each reference made to it by the Z80. The Write Fault Reset to the 9406 Flexible Disk Drive assembly requires one wait state.

9517A-4 DIRECT-MEMORY-ACCESS (DMA) CONTROLLER

The 9517A-4 direct-memory-access (DMA) controller is a peripheral interface IC that allows direct memory access to the subsystem RAM. Four independent DMA channels are provided. Each channel is designed to enable an external device to transfer information to or from the subsystem memory. In the flexible disk subsystem design, however, only three channels are wired for external device use. Channels 1 and 3 are both used by the 1791 flexible disk controller IC, and channel 2 is used by the PLATO parallel I/O channel. Channel 0 is not used.

Separate internal registers are provided in each channel for mode control, current address, base address, current word count, and base word count.

1791A-02 FLEXIBLE DISK CONTROLLER (FDC)

The 1791A-02 flexible disk controller (FDC) performs the functions of a flexible disk formatter and controller in a single integrated circuit. The FDC controls both single-density and double-density formatting. The FDC provides a 16-bit cyclic redundancy check (CRC) with the polynominal: $G(X) = X^{16} + X^{12} + X^5 + 1$. The IC is designed for bidirectional one's-complemented data transfers. Therefore, all commands sent to the FDC, and status read from the FDC, must be transmitted and received by the Z80 as one's-complemented data. Data is complemented when written on the flexible disk and complemented when read off the flexible disk. Therefore, true data written to the FDC is also read from the FDC as true data.

It is possible to read and write to/from the FDC on a byte-by-byte basis for single-density storage. However, to operate in double density it is necessary to use the 9517A-02 DMA controller to maintain the proper data rate for flexible disk read/write operations.

2716 ERASABLE PROGRAMMABLE READ-ONLY MEMORY (EPROM)

The 2716 EPROM is a 16 384-bit (2K by 8-bit) ultraviolet erasable and electrically programmable read-only memory. The read access time for the IC is 450 ns. The standard subsystem EPROMs uses memory addresses 0000_{16} through $0FFF_{16}$.

The stored program in the EPROM provides subsystem diagnostics that include LED testing, ROM checksum, LSI device testing, memory testing, disk read/write testing, autoload, and initial PLATO parallel I/O channel interfacing with the host terminal.

Z80 COUNTER/TIMER CIRCUIT (CTC)

The Z80 counter/timer circuit is a programmable IC with four 8-bit internal independent channels that provide counting and timing functions under control of the Z80 microprocessor. The Z80 can configure the CTC channels to operate under various modes and conditions as required. In either timer or counter mode, an 8-bit, Z80-readable down-counter indicates the number of counts-to-go until zero. Interrupts can be programmed to occur on the zero count of any channel. The interrupt logic provides automatic interrupt vectoring.

All four of the counter timer circuits have external enables that can be selected by the Z80. Three of the counters have count-zero outputs. Two of the outputs are wired to the inputs of two of the other counters. This provides the ability to cascade the network into two 8-bit counters or essentially one 16-bit counter for each two CTCs used. Each of the CTCs used as an enable to one of the other has an external logic signal wired to its own input (figure 4-5). One external input is the Head-Down-Load (HDL) signal that indicates the disk was instructed to lower its read/write head. The counters can then be programmed to time out the mechanical delay that will take place in the 9406 drive (approximately 40 milliseconds). The zero-count output is sent to the 1791 flexible disk controller IC as a status bit. This status input means that the read/write head should be on the disk surface. This status bit is called Head-Load Timing (HLT).

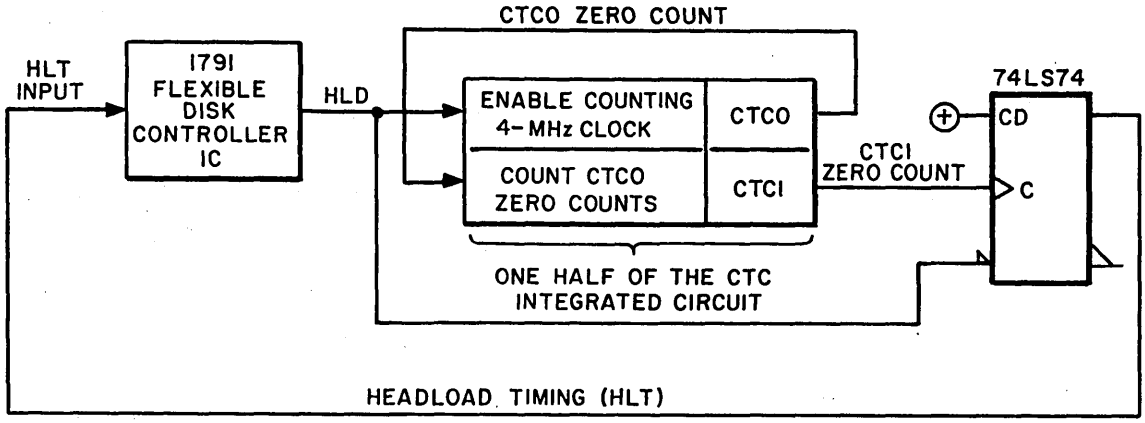

Figure 4-5. External Wiring of the CTC for Head-Load Timing

The other two CTCs of the integrated circuit are wired to allow them to be used for timing as a real-time clock. There is a circuit in the power supply that generates a pulse for every period of line voltage that occurs. This pulse is wired to the input of one of the CTCs (CTC2). The output of this CTC (CTC2) is wired as the input of the fourth CTC (CTC3). Together, these two CTCs provide a programmable down-counter 16 bits long (figure 4-6).

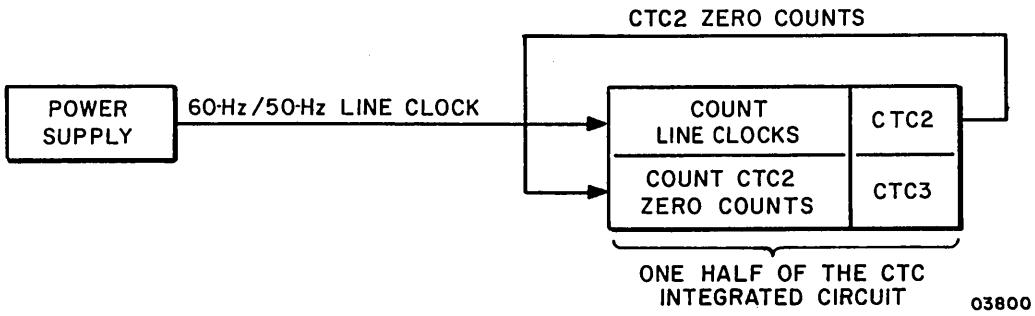

Figure 4-6. External Wiring of the CTC for Real-Time Clock

Note that it is possible to use the four CTC circuits in the CTC IC as four distinct timers by ignoring the input enables (selected only by program control) and use the four CTCs to count down the 4-MHz clock input to the IC.

9519 INTERRUPT CONTROLLER

The 9519 interrupt controller can manage up to eight maskable interrupt request inputs, resolve priorities, and supply up to four bytes of programmable response for each interrupt. The controller board only uses seven of these interrupts. They are:

- IREQ7 Not Used
- IREQ6 Line Clock
- IREQ5 DMA End of Processes
- IREQ4 1791 FDC Interrupt
- IREQ3 Parallel I/O Data Out (to the terminal)
- IREQ2 Parallel I/O Data In (from the terminal)
- IREQ1 Read Status (to the terminal)
- IREQ0 Write Command (from the terminal)

The interrupt network is shown in block diagram form in figure 4-7.

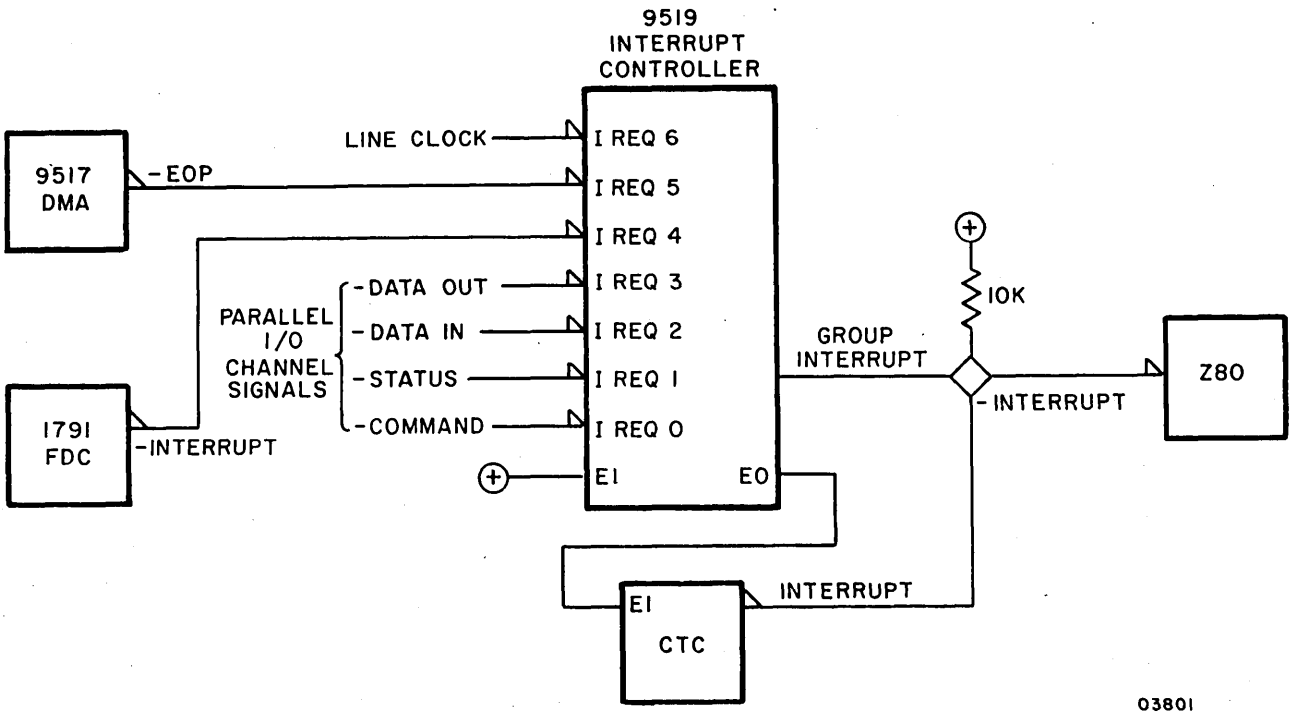

Figure 4-7. Flexible Disk Interrupt Network

EXTERNAL INTERFACE PIN ASSIGNMENTS

Tables 4-1 and 4-2 list the external interface pin assignments for the parallel I/O channel and slave drive unit channel, respectively. Both of the interfaces use standard TTL-to-TTL circuits and logic levels. For external signal definitions, refer to the applicable hardware maintenance manual listed in the preface.

INTERNAL CONNECTOR PIN ASSIGNMENTS

Figure 4-8 shows the internal connector pin assignments for the flexible disk subsystem. For signal definitions, refer to the 9406 Flexible Disk Drive Hardware Maintenance Manual (publication number is listed in the preface).

TABLE 4-1. PARALLEL I/O CHANNEL PIN ASSIGNMENTS

Signal	In/Out	Active Level	Pin Number
Data 2^0	Both	High	J6, J7-15
Data 2^1	Both	High	J6, J7-16
Data 2^2	Both	High	J6, J7-17
Data 2^3	Both	High	J6, J7-18
Data 2^4	Both	High	J6, J7-21
Data 2^5	Both	High	J6, J7-22
Data 2^6	Both	High	J6, J7-23
Data 2^7	Both	High	J6, J7-24
+5 V (Terminator only)			J6, J7-13
Address 2^0	In	High	J6, J7-2
Address 2^1	In	High	J6, J7-3
Address 2^2	In	High	J6, J7-4
Address 2^3	In	High	J6, J7-5
Address 2^4	In	High	J6, J7-6
Not Used (in this device)			J6, J7-7
Not Used (in this device)			J6, J7-9
-External Write	In	Low	J6, J7-8
-External Read	In	Low	J6, J7-10
-External Interrupt	Out	Low	J6, J7-12
Not Used (in this device)			J6, J7-11
Ground			J6, J7-1
Ground			J6, J7-14
Ground			J6, J7-19
Ground			J6, J7-20
Ground			J6, J7-25

TABLE 4-2. SLAVE DRIVE UNIT CHANNEL PIN ASSIGNMENTS

Signal	In/Out	Active Level	Pin Number*
-Read Data Composite	In	Low	J5-2
-Head Load	Out	Low	J5-4
-Track 00	In	Low	J5-6
-Index	In	Low	J5-8
-Low Write Current	Out	Low	J5-10
-Step	Out	Low	J5-12
-Direction (Increase)	Out	Low	J5-14
-Write Enable	Out	Low	J5-16
-Write Data	Out	Low	J5-31
-Unit Select 1	Out	Low	J5-33
-Unit Select 2	Out	Low	J5-29
-Unit Ready Status 1	In	Low	J5-50
-Unit Ready Status 2	In	Low	J5-48
-Write Protect	In	Low	J5-42
-Head Select (low = head 1; high = head 0)	Out	Low	J5-40
-Write Fault	In	Low	J5-38
-Write Fault Reset	Out	Low	J5-36
-Diskette Type (Two Sided)	In	Low	J5-34

*Pins 1, 3, 5, 7, 9, 11, 13, 15, 17, 18, 20, 22, 24, 26, 28, 30, 32, 35, 37, 39, 41, 43, 45, 47, and 49 are at logic ground; pins 19, 21, 23, 25, 27, 44, and 46 are open.

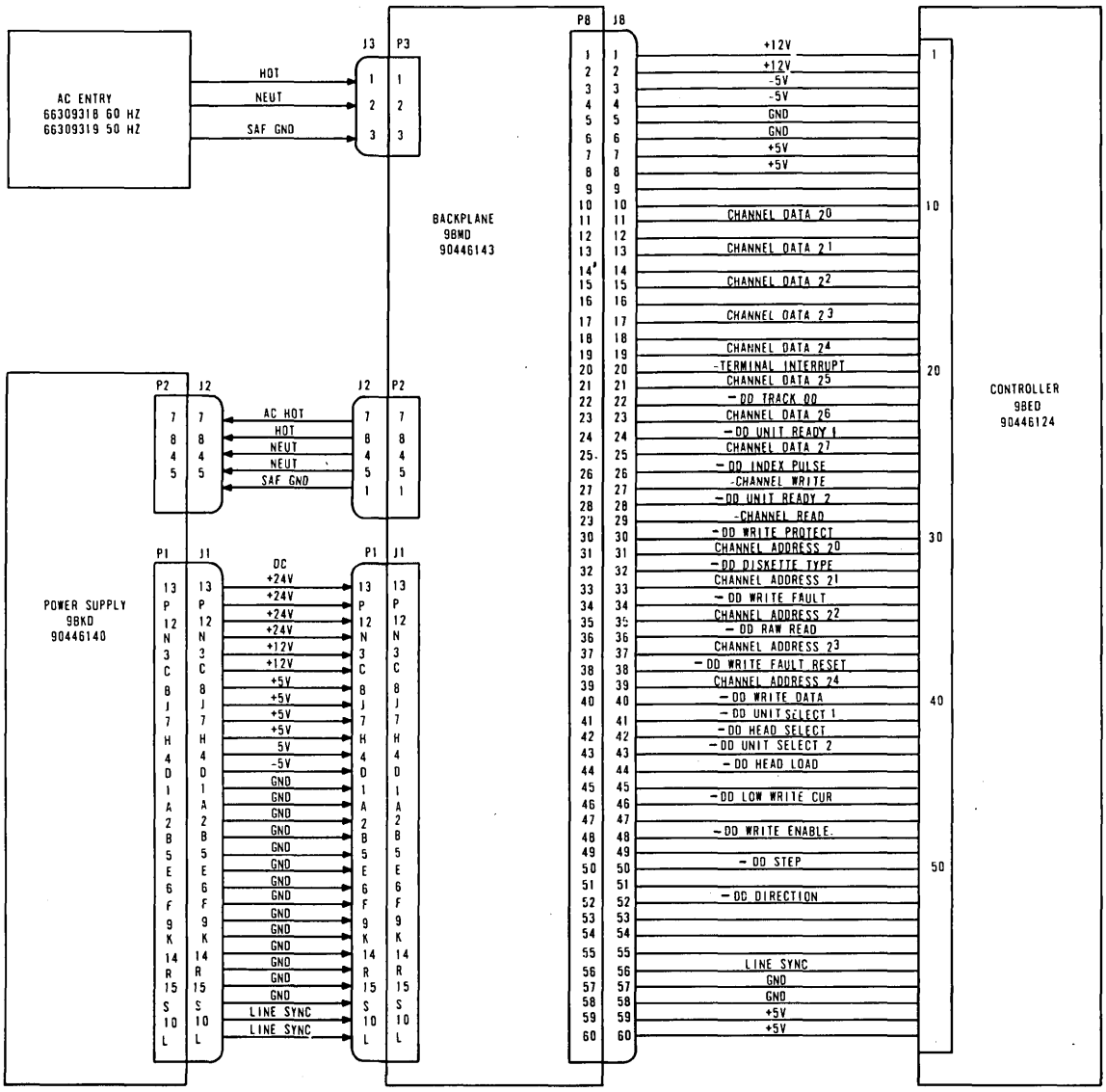

03932

Figure 4-8. Internal Connector Pin Assignments

DIAGRAMS

This section contains logic and schematic diagrams for the controller board (9BED), power supply (9BKD), backplane (9BMD), and ac power wiring of the flexible disk subsystem. For logic diagrams on the drive unit, refer to the 9406 Flexible Disk Drive Hardware Maintenance Manual (publication number is listed in the preface).

SHEET REVISION STATUS																			
18	17	16	15	14	13	12	11	10	9	8	7	6	5	4	3	2	1	REV	CO
00	00	01	00	00	00	00	00	00	00	00	00	00	00	00	00	00	00	DC	50005-65
A	A	A	A	A	A	A	A	A	A	A	A	A	A	A	A	A	A	A	13489-14
A	A	A	A	A	A	A	B	A	A	A	A	A	A	A	A	A	B	B	14469
A	A	A	A	A	A	A	B	A	A	A	A	A	A	A	A	C	C	C	14571

REVISION RECORD					
DESCRIPTION	DRFT	DATE	CHKD	APP
RELEASED CLASS "B"	-	12/14/79	—	EA
RELEASED CLASS "A"	—	12/11/80	—	MCK
REVISED PER ECO	EE	1/19/81	GB	JAP
REVISED PER ECO	WJG	3-2-81	WJG	JAP

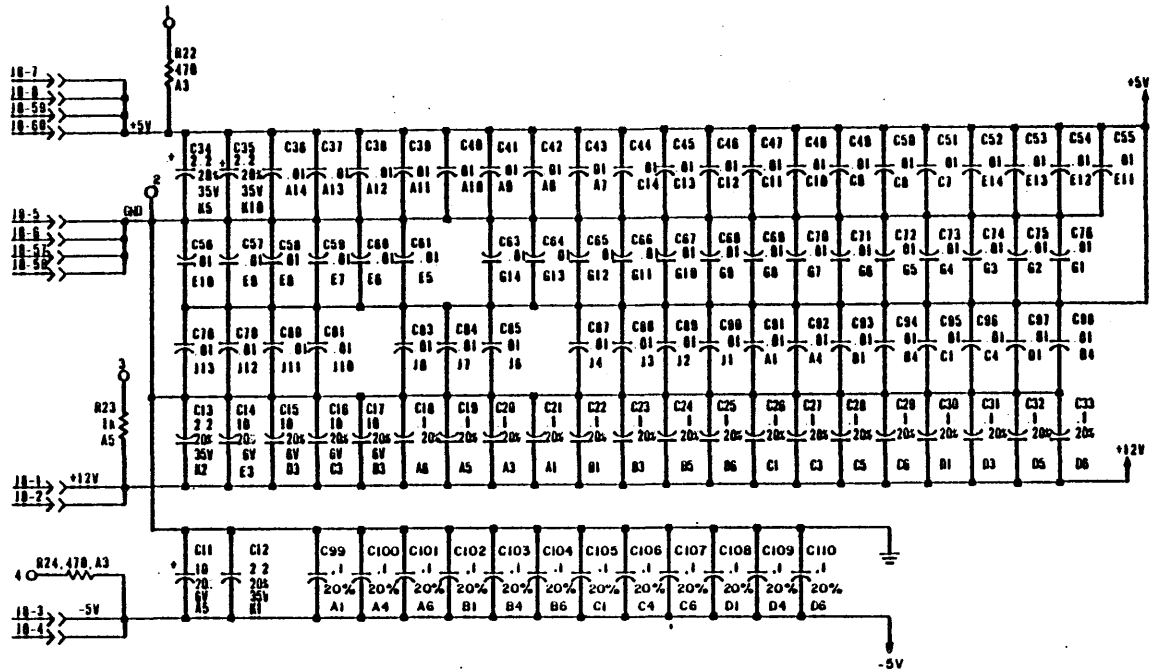

SPARES

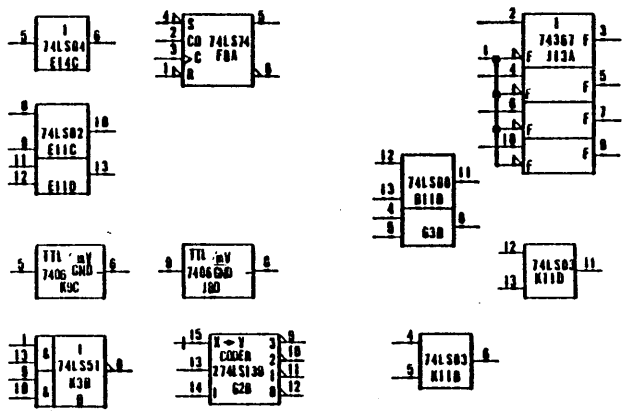

NOTES:

1. UNLESS OTHERWISE SPECIFIED POWER AND GROUND PINS OF INTEGRATED CIRCUITS ARE AS LISTED BELOW:
   14 PIN INTEGRATED CKTS; PIN 14 = +5V, PIN 7 = GND
   16 PIN INTEGRATED CKTS; PIN 16 = +5V, PIN 8 = GND
   24 PIN INTEGRATED CKTS; PIN 24 = +5V, PIN 12 = GND.
2. CONTROL BLOCK INPUTS ARE SHOWN ONLY ONCE, BUT ARE CONNECTED IDENTICALLY TO MUX LOCATED AT B7 & C7
3. CONTROL BLOCK INPUTS ARE SHOWN ONLY ONCE, BUT ARE CONNECTED IDENTICALLY TO MEM. LOCATED AT A1, A2, A3, A4, A5, & A6
4. CONTROL BLOCK INPUTS ARE SHOWN ONLY ONCE, BUT ARE CONNECTED IDENTICALLY TO MEM LOCATED AT B1 B2, B3, B4, B5, & B6
5. CONTROL BLOCK INPUTS ARE SHOWN ONLY ONCE, BUT ARE CONNECTED IDENTICALLY TO MEM LOCATED AT C1, C2, C3, C4, C5 & C6
6. CONTROL BLOCK INPUTS ARE SHOWN ONLY ONCE, BUT ARE CONNECTED IDENTICALLY TO MEM LOCATED AT D1, D2, D3, D4, D5, & D6
7. UNLESS OTHERWISE NOTED ALL LEDS TO BE P N10171281

REFERENCE DRAWING	
DETAIL	90446250
ASSY.	90446280

COMPONENTS, EXCEPT AS NOTED			
	TOLERANCE	VALUE	RATING
RES	± 5%	OHMS	1/4 W
CAP	+80 -20%	µF	25V

CONTROL DATA

FIRST USED ON		
DWN	Mary Dietz	10/15/80
CHKD		10/15/80
ENGR		12/4/80
MFG		12/16/80
APPR		12-17-80

TITLE

SCHEMATIC DIAGRAM, 9BED

CODE IDENT		DRAWING NO
15920	C	90446258

SCALE | CROSS REF NO | SHEET 1 OF 18

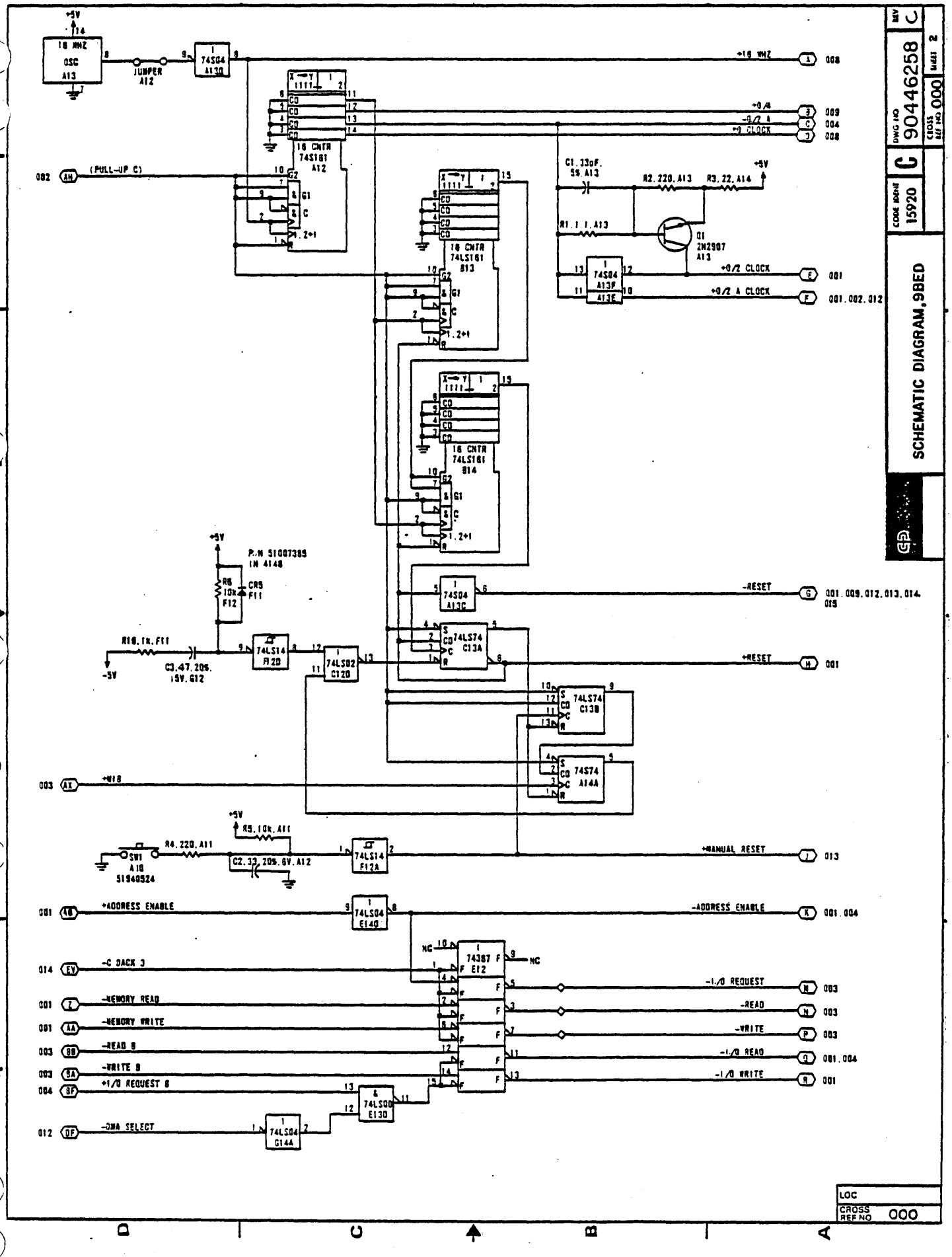
SCHEMATIC DIAGRAM,9BED
90446258
15920
C
000
+16 MHZ
+Q/4
-Q/2 A
+Q CLOCK
+Q/2 CLOCK
+Q/2 A CLOCK
-RESET
+RESET
+MANUAL RESET
+ADDRESS ENABLE
-ADDRESS ENABLE
-C DACK 3
-MEMORY READ
-MEMORY WRITE
-READ B
-WRITE B
+I/O REQUEST B
-DMA SELECT
-I/O REQUEST
-READ
-WRITE
-I/O READ
-I/O WRITE
(PULL-UP C)
JUMPER A12
16 CNTR 74S161 A12
16 CNTR 74LS161 B13
16 CNTR 74LS161 B14
Q1 2N2907 A13
P.N 51007385 IN 4148
SW1 A10 51940524
LOC
CROSS REF NO 000

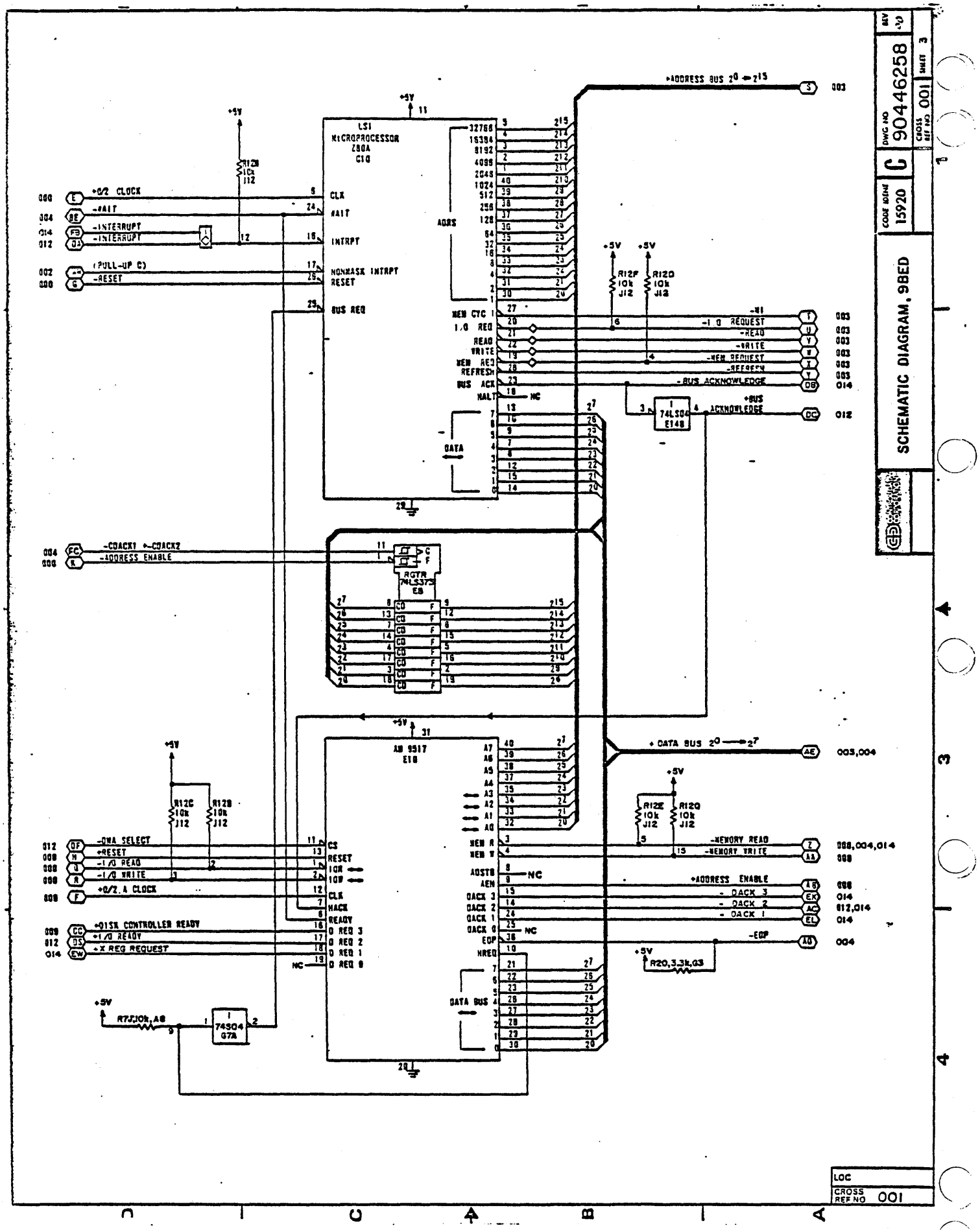
SCHEMATIC DIAGRAM, 9BED
DWG NO 90446258
CROSS REF NO 001
SHEET 3
REV
CODE IDENT 15920
C
LSI MICROPROCESSOR Z80A C10
+Ø/2 CLOCK
-WAIT
-INTERRUPT
(PULL-UP C)
-RESET
BUS REQ
CLK
WAIT
INTRPT
NONMASK INTRPT
RESET
ADRS
DATA
MEM CYC
I/O REQ
READ
WRITE
MEM REQ
REFRESH
BUS ACK
HALT
NC
+ADDRESS BUS 2⁰ → 2¹⁵
-M1
-I/O REQUEST
-READ
-WRITE
-MEM REQUEST
-REFRESH
-BUS ACKNOWLEDGE
+BUS ACKNOWLEDGE
74LS04 E14B
-COACK1 -COACK2
-ADDRESS ENABLE
RGTR 74LS373 E8
AM 9517 E18
+ DATA BUS 2⁰ → 2⁷
-DMA SELECT
+RESET
-I/O READ
-I/O WRITE
+Ø/2.A CLOCK
+DISK CONTROLLER READY
+I/O READY
+X REQ REQUEST
CS
RESET
IOR
IOW
CLK
HACK
READY
D REQ 3
D REQ 2
D REQ 1
D REQ 0
A7
A6
A5
A4
A3
A2
A1
A0
MEM R
MEM W
ADSTB
AEN
DACK 3
DACK 2
DACK 1
DACK 0
EOP
HREQ
DATA BUS
-MEMORY READ
-MEMORY WRITE
+ADDRESS ENABLE
- DACK 3
- DACK 2
- DACK 1
-EOP
R20,3.3k,G3
R7JJ10k,A8
74S04 G7A
LOC
CROSS REF NO 001

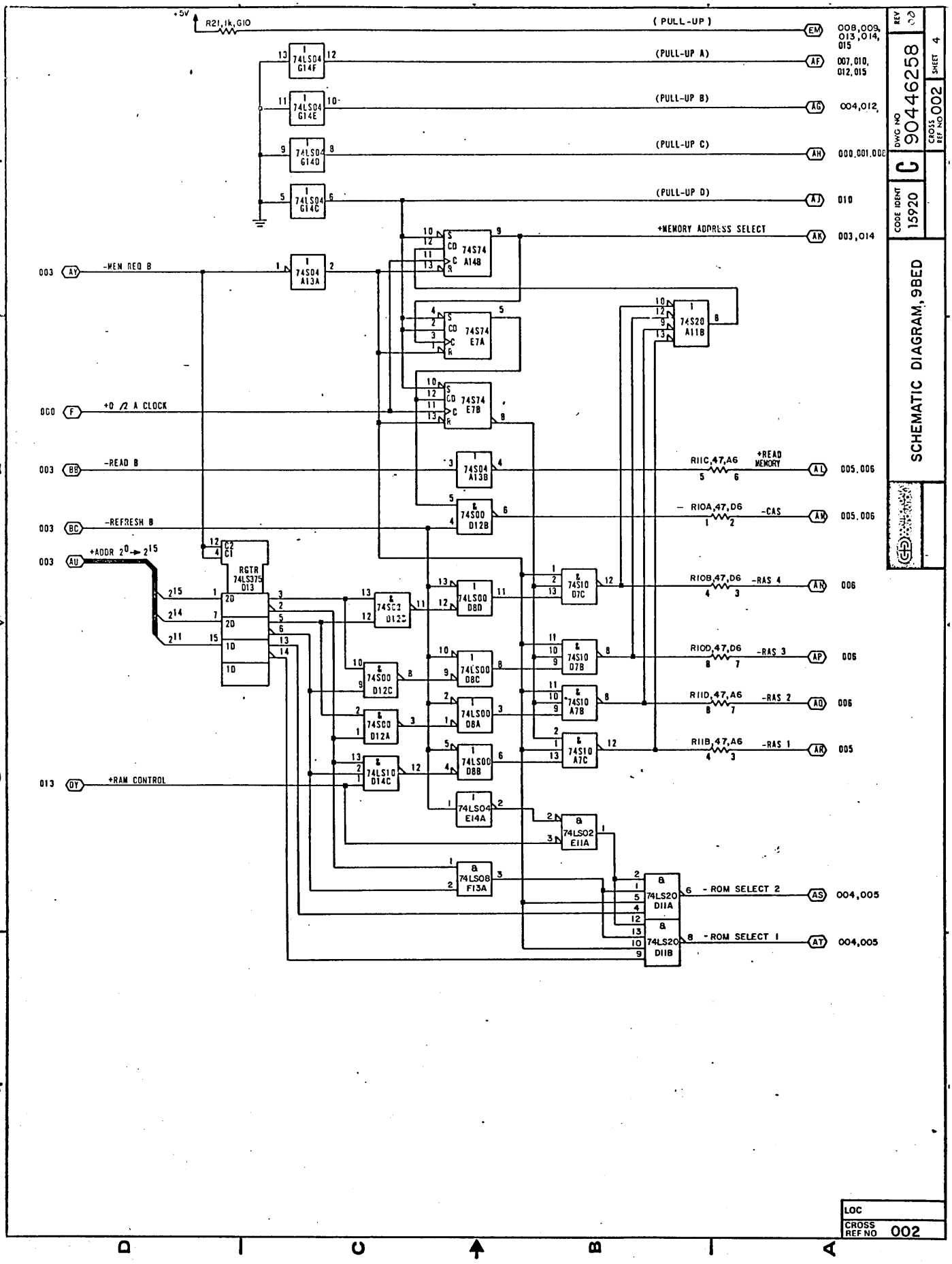
+5V
R21,1k,G10
(PULL-UP)
EM
008,009,013,014,015
74LS04 G14F
(PULL-UP A)
AF
007,010,012,015
74LS04 G14E
(PULL-UP B)
AG
004,012,
74LS04 G14D
(PULL-UP C)
AH
000,001,002
74LS04 G14C
(PULL-UP D)
AJ
010
+MEMORY ADDRESS SELECT
AK
003,014
003 AY -MEM REQ B
74S04 A13A
74S74 A14B
74S74 E7A
74S74 E7B
74S20 A11B
000 F +0 /2 A CLOCK
003 BB -READ B
74S04 A13B
R11C,47,A6
+READ MEMORY
AL
005,006
74S00 D12B
R10A,47,D6
-CAS
AM
005,006
003 BC -REFRESH B
003 AU +ADDR 2^0 → 2^15
RGTR 74LS375 D13
74S10 D7C
R10B,47,D6
-RAS 4
AN
006
74S00 D12C
74LS00 D8D
74S10 D7B
R10D,47,D6
-RAS 3
AP
006
74S00 D12A
74LS00 D8C
74S10 A7B
R11D,47,A6
-RAS 2
AQ
006
74LS00 D8A
74S10 A7C
R11B,47,A6
-RAS 1
AR
005
74LS10 D14C
74LS00 D8B
013 DY +RAM CONTROL
74LS04 E14A
74LS02 E11A
74LS08 F13A
74LS20 D11A
-ROM SELECT 2
AS
004,005
74LS20 D11B
-ROM SELECT 1
AT
004,005
DWG NO 90446258
REV 02
SHEET 4
CROSS REF NO 002
CODE IDENT 15920
C
SCHEMATIC DIAGRAM, 9BED
LOC
CROSS REF NO 002

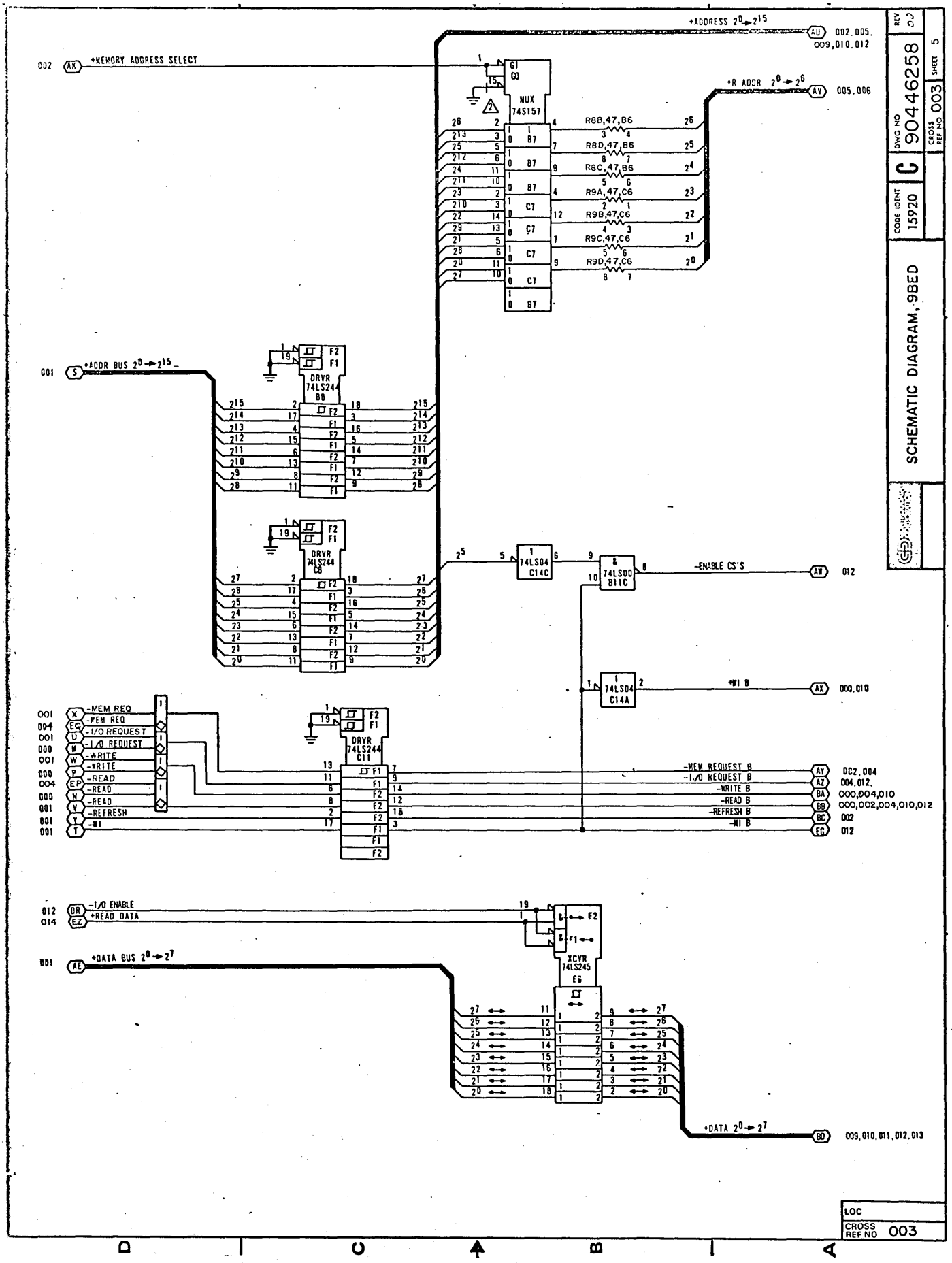
+ADDRESS 2^0→2^15
AU 002,005,009,010,012
002 AK +MEMORY ADDRESS SELECT
MUX 74S157
+R ADDR 2^0→2^6
AV 005,006
R8B,47,B6
R8D,47,B6
R8C,47,B6
R9A,47,C6
R9B,47,C6
R9C,47,C6
R9D,47,C6
001 S +ADDR BUS 2^0→2^15
DRVR 74LS244 B8
DRVR 74LS244 C8
74LS04 C14C
74LS00 B11C
-ENABLE CS'S
AW 012
74LS04 C14A
+MI B
AX 000,010
001 X -MEM REQ
004 EQ -MEM REQ
001 U -I/O REQUEST
000 M -I/O REQUEST
001 W -WRITE
000 P -READ
004 EP -READ
000 N -READ
001 V -REFRESH
001 Y -MI
001 T -MI
DRVR 74LS244 C11
-MEM REQUEST B
-I/O REQUEST B
-WRITE B
-READ B
-REFRESH B
-MI B
AY 002,004
AZ 004,012,
BA 000,004,010
BB 000,002,004,010,012
BC 002
EG 012
012 DR -I/O ENABLE
014 EZ +READ DATA
001 AE +DATA BUS 2^0→2^7
XCVR 74LS245 E6
+DATA 2^0→2^7
BD 009,010,011,012,013
REV 03
DWG NO 90446258
SHEET 5
CROSS REF NO 003
CODE IDENT 15920
C
SCHEMATIC DIAGRAM, 9BED
LOC
CROSS REF NO 003
D I C A B I A

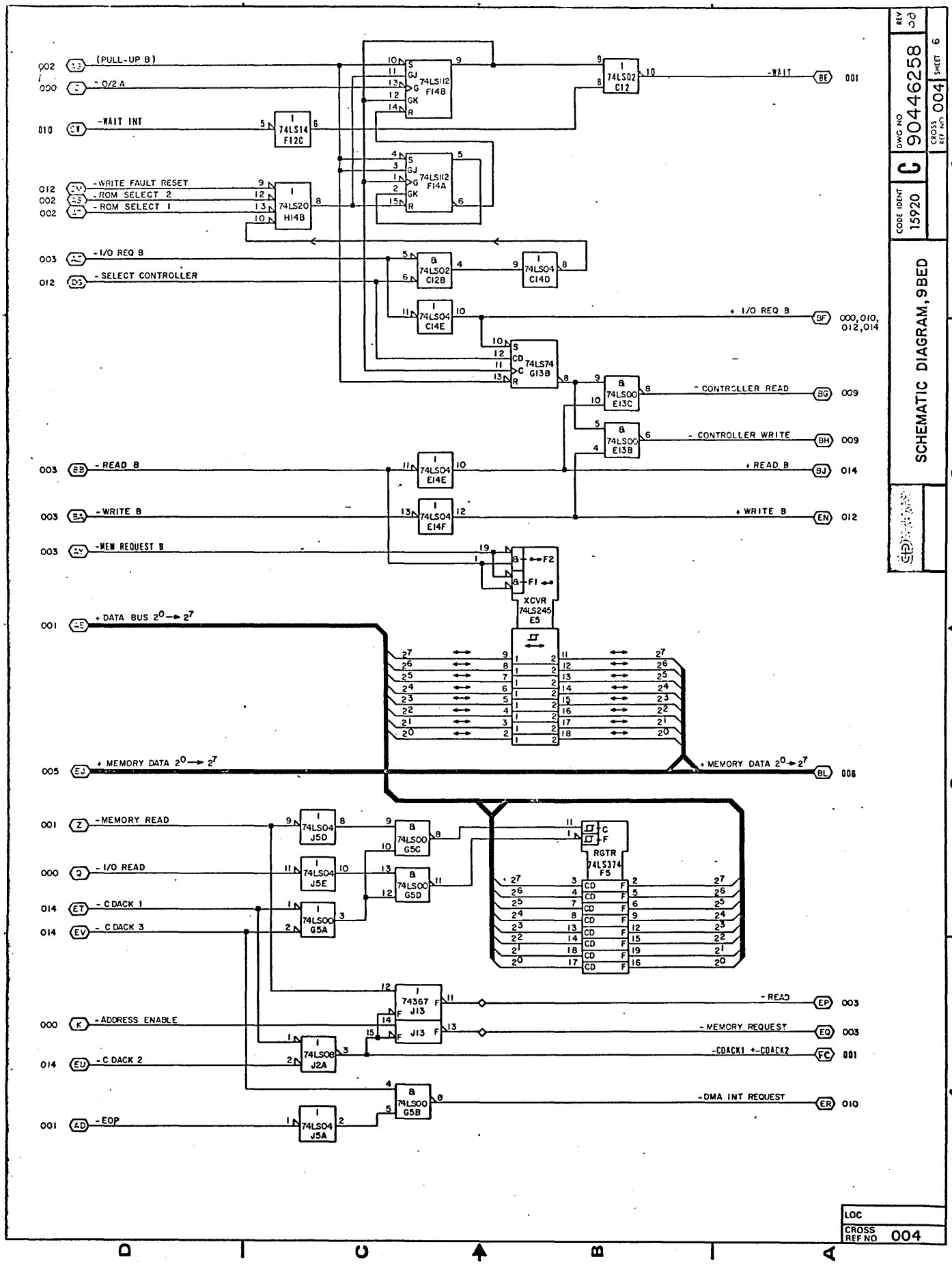
SCHEMATIC DIAGRAM, 9BED
DWG NO 90446258
CODE IDENT 15920
C
CROSS REF NO 004
SHEET 6
REV 00
(PULL-UP B)
- Q/2 A
-WAIT INT
-WRITE FAULT RESET
-ROM SELECT 2
-ROM SELECT 1
-I/O REQ B
-SELECT CONTROLLER
-READ B
-WRITE B
-MEM REQUEST B
+ DATA BUS 2⁰→2⁷
+ MEMORY DATA 2⁰→2⁷
-MEMORY READ
-I/O READ
-C DACK 1
-C DACK 3
-ADDRESS ENABLE
-C DACK 2
-EOP
-WAIT
+ I/O REQ B
- CONTROLLER READ
- CONTROLLER WRITE
+ READ B
+ WRITE B
+ MEMORY DATA 2⁰→2⁷
-READ
-MEMORY REQUEST
-CDACK1 +-CDACK2
-DMA INT REQUEST
74LS112 F14B
74LS112 F14A
74LS14 F12C
74LS20 H14B
74LS02 C12
74LS02 C12B
74LS04 C14D
74LS04 C14E
74LS74 G13B
74LS00 E13C
74LS00 E13B
74LS04 E14E
74LS04 E14F
XCVR 74LS245 E5
RGTR 74LS374 F5
74LS04 J5D
74LS04 J5E
74LS00 G5A
74LS00 G5C
74LS00 G5D
74367 J13
74LS08 J2A
74LS04 J5A
74LS00 G5B
LOC
CROSS REF NO 004

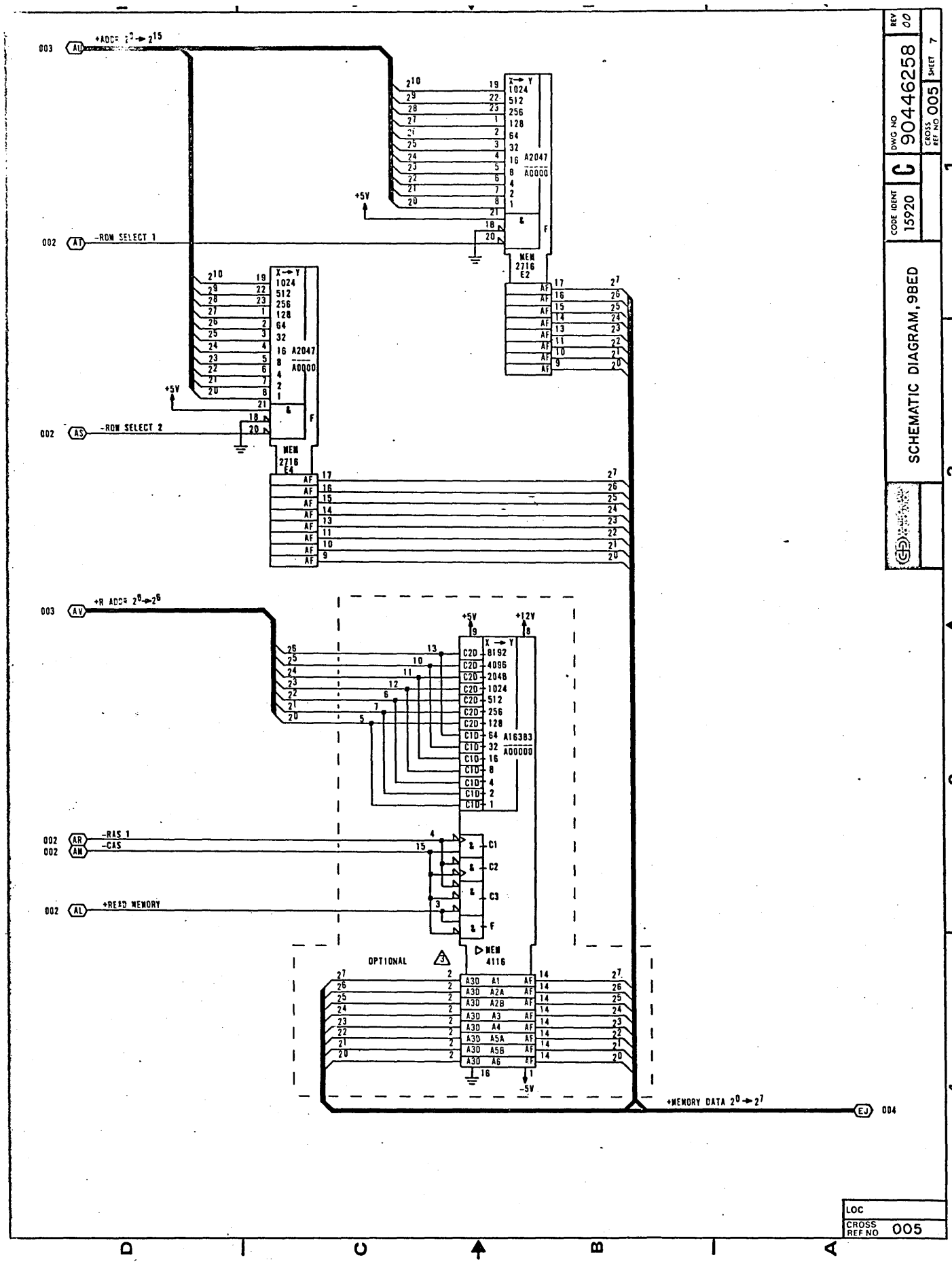
SCHEMATIC DIAGRAM, 9BED
CODE IDENT 15920
C
DWG NO 90446258
REV 00
CROSS REF NO 005
SHEET 7
LOC
CROSS REF NO 005
-ROW SELECT 1
-ROW SELECT 2
+R ADDR 2⁰→2⁶
-RAS 1
-CAS
+READ MEMORY
+MEMORY DATA 2⁰→2⁷
OPTIONAL
MEM 2716 E2
MEM 2716 E4
MEM 4116
A2047 A0000
A16383 A00000
+5V
+12V
-5V

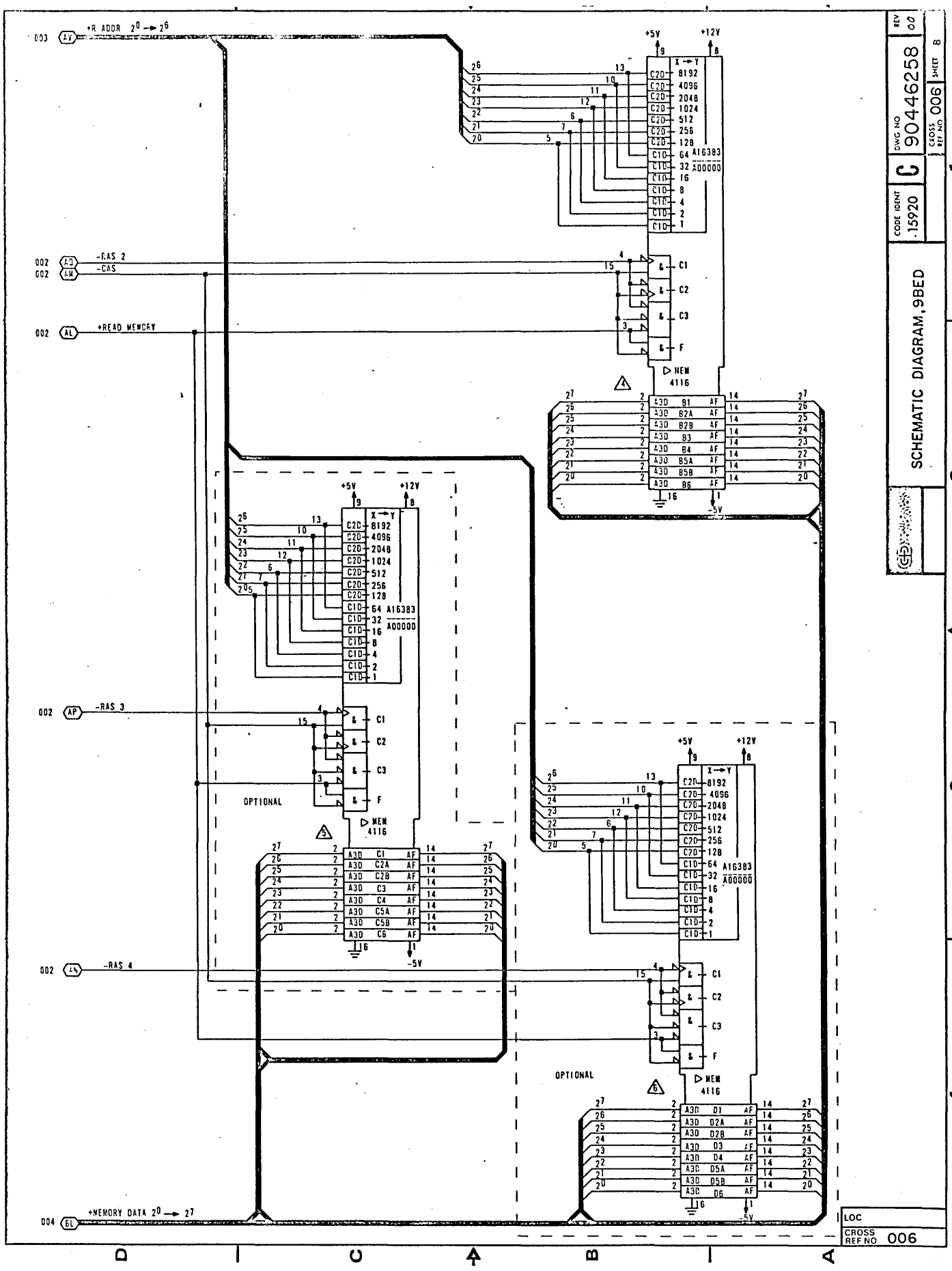
SCHEMATIC DIAGRAM, 9BED
CODE IDENT 15920
C
DWG NO 90446258
REV 00
SHEET 8
CROSS REF NO 006
+R ADDR 2⁰ → 2⁶
-RAS 2
-CAS
+READ MEMORY
-RAS 3
-RAS 4
+MEMORY DATA 2⁰ → 2⁷
A16383
A00000
MEM 4116
OPTIONAL
LOC
CROSS REF NO 006

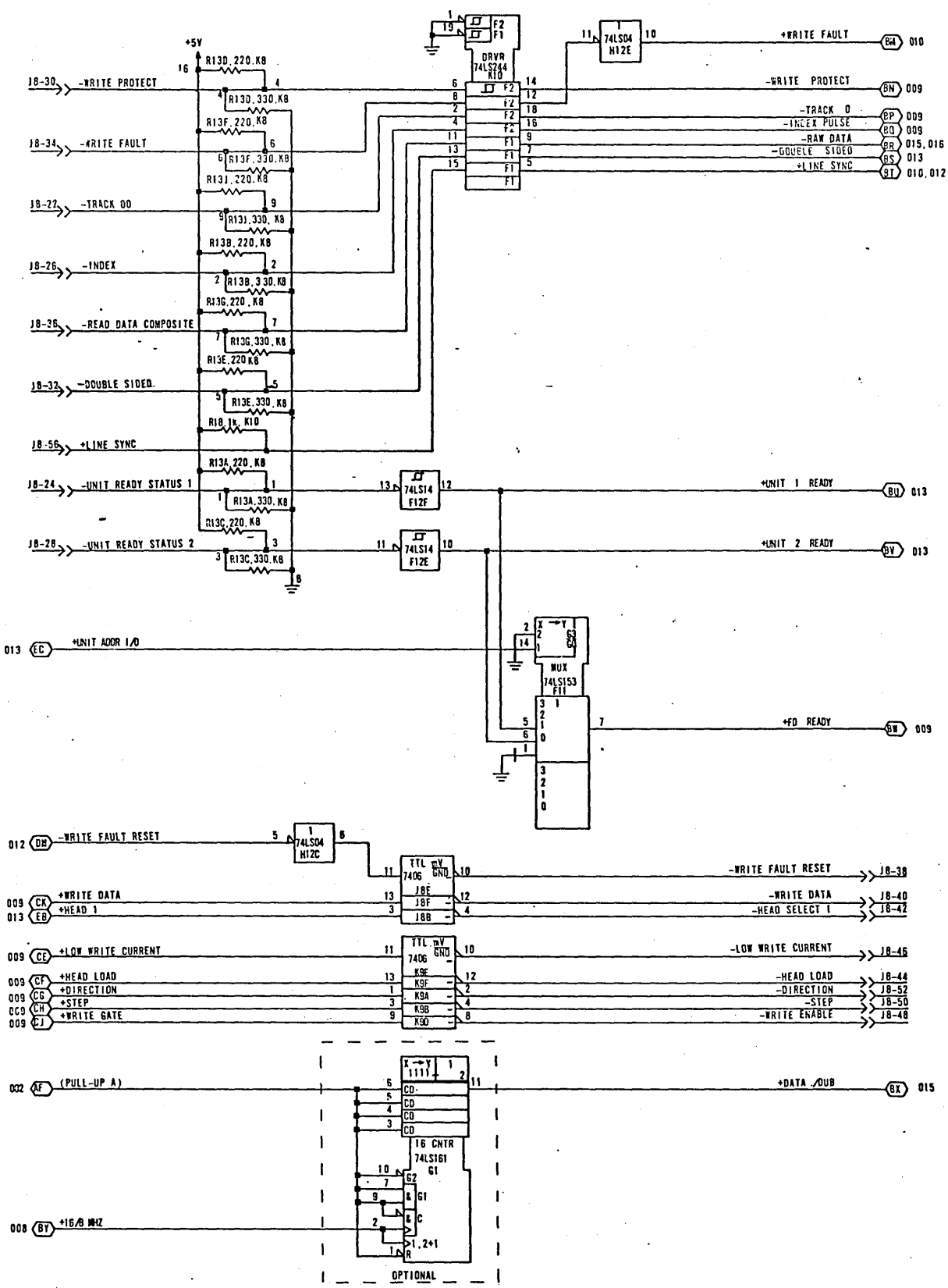
SCHEMATIC DIAGRAM, 9BED
DWG NO 90446258
CROSS REF NO 007
SHEET 9
REV 00
CODE IDENT 15920
J8-30 -WRITE PROTECT
J8-34 -WRITE FAULT
J8-22 -TRACK 00
J8-26 -INDEX
J8-36 -READ DATA COMPOSITE
J8-32 -DOUBLE SIDED
J8-56 +LINE SYNC
J8-24 -UNIT READY STATUS 1
J8-28 -UNIT READY STATUS 2
+5V
R13D, 220, K8
R13D, 330, K8
R13F, 220, K8
R13F, 330, K8
R13I, 220, K8
R13I, 330, K8
R13B, 220, K8
R13B, 330, K8
R13G, 220, K8
R13G, 330, K8
R13E, 220 K8
R13E, 330, K8
R18, 1k, K10
R13A, 220, K8
R13A, 330, K8
R13C, 220, K8
R13C, 330, K8
DRVR 74LS244 K10
74LS04 H12E
+WRITE FAULT
-WRITE PROTECT
-TRACK 0
-INDEX PULSE
-RAW DATA
-DOUBLE SIDED
+LINE SYNC
74LS14 F12F
74LS14 F12E
+UNIT 1 READY
+UNIT 2 READY
+UNIT ADDR I/O
MUX 74LS153 F11
+FD READY
-WRITE FAULT RESET
74LS04 H12C
TTL 7406 J8E J8F J8B
-WRITE FAULT RESET
+WRITE DATA
+HEAD 1
-WRITE DATA
-HEAD SELECT 1
+LOW WRITE CURRENT
-LOW WRITE CURRENT
TTL 7406 K9E K9F K9A K9B K9D
+HEAD LOAD
+DIRECTION
+STEP
+WRITE GATE
-HEAD LOAD
-DIRECTION
-STEP
-WRITE ENABLE
(PULL-UP A)
+DATA /DUB
16 CNTR 74LS161 G1
+16/8 MHZ
OPTIONAL
LOC
CROSS REF NO 007

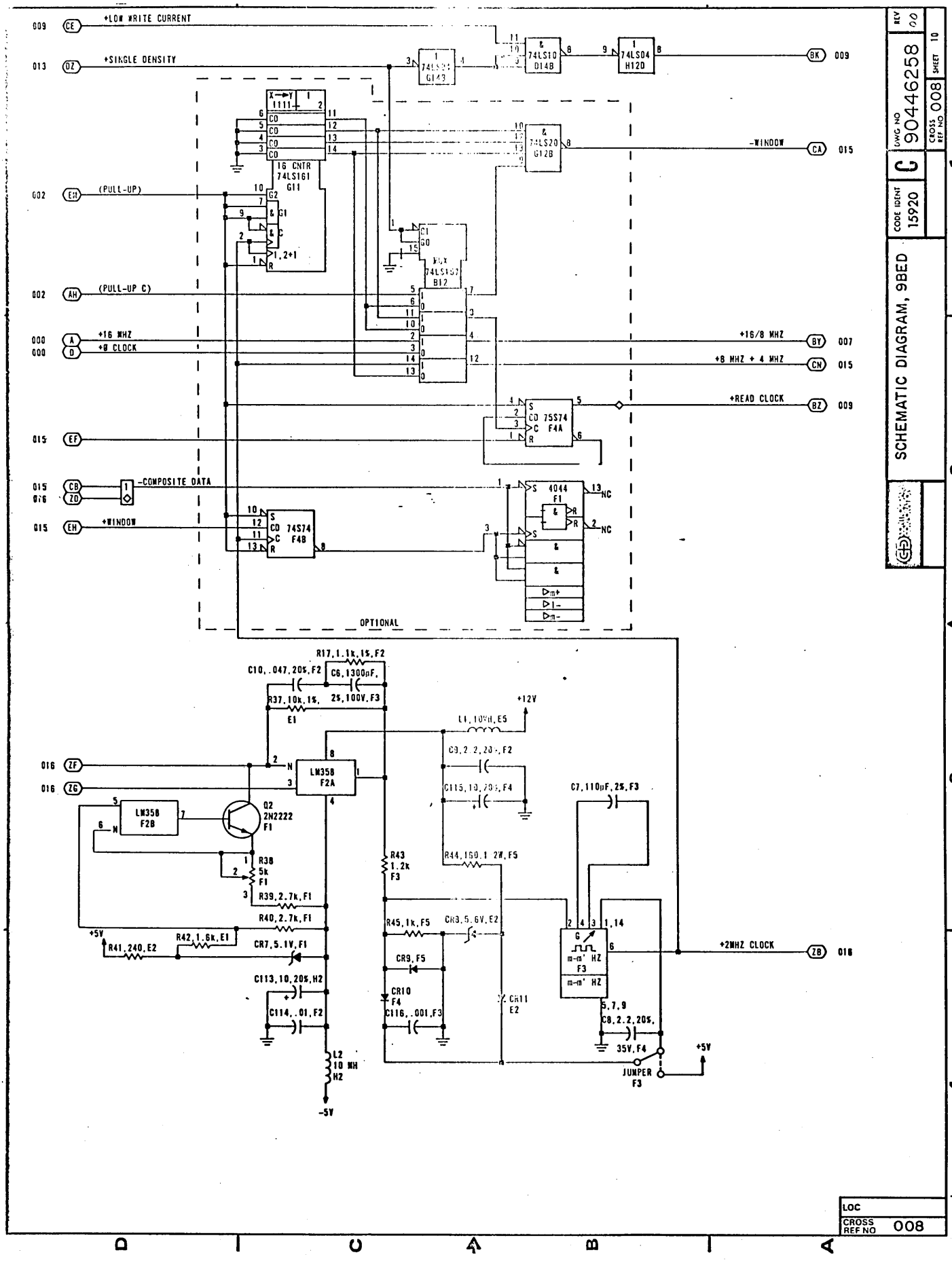
+LOW WRITE CURRENT
+SINGLE DENSITY
74LS10 D14B
74LS04 H12D
-WINDOW
16 CNTR 74LS161 G11
(PULL-UP)
(PULL-UP C)
+16 MHZ
+8 CLOCK
+16/8 MHZ
+8 MHZ + 4 MHZ
+READ CLOCK
75S74 F4A
-COMPOSITE DATA
+WINDOW
74S74 F4B
4044 F1
OPTIONAL
LM358 F2A
LM358 F2B
Q2 2N2222 F1
+12V
+5V
-5V
+2MHZ CLOCK
JUMPER F3
SCHEMATIC DIAGRAM, 9BED
DWG NO 90446258
CODE IDENT 15920
CROSS REF NO 008
SHEET 10
REV 00
LOC
CROSS REF NO 008

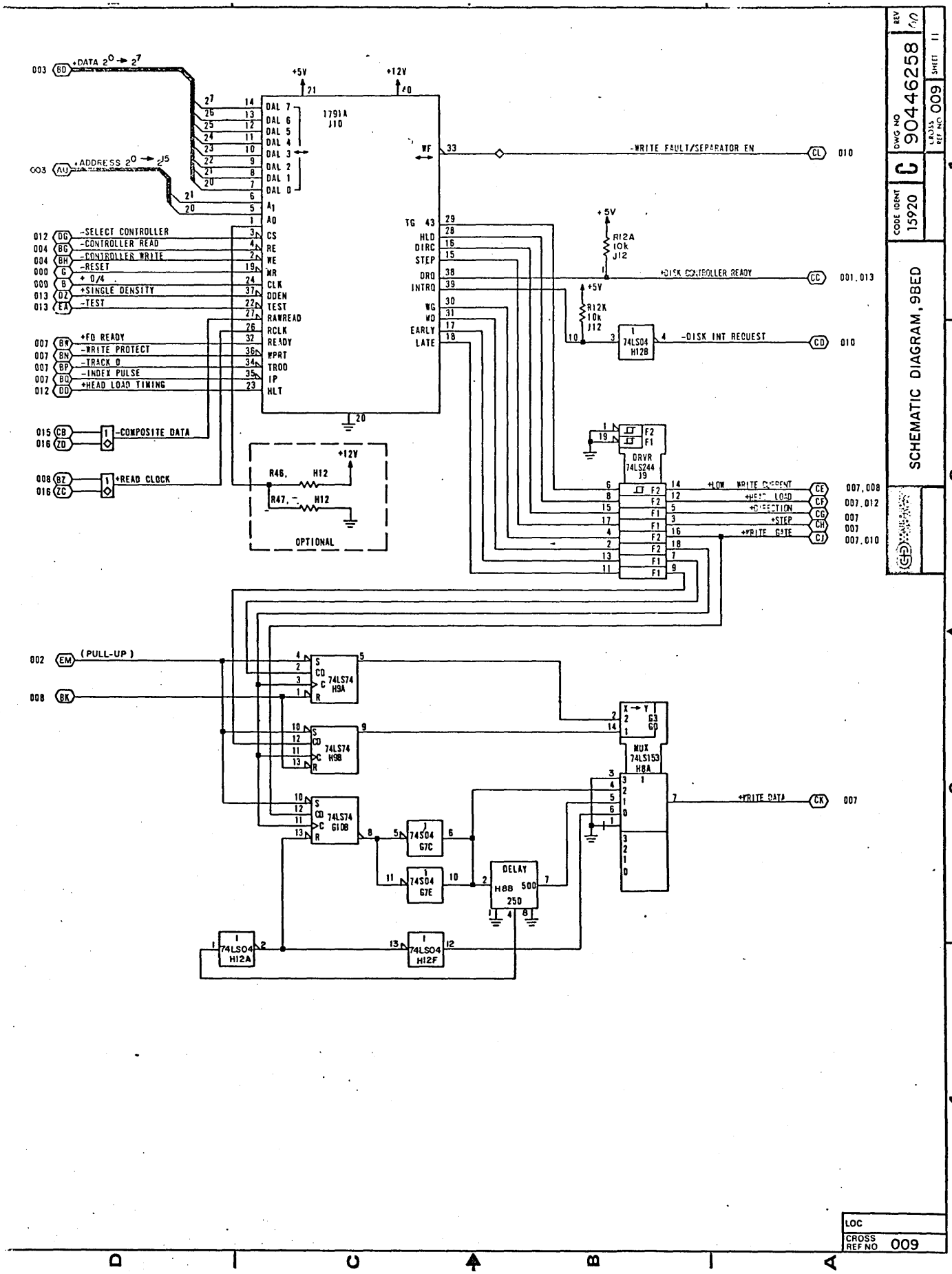
SCHEMATIC DIAGRAM, 9BED
DWG NO 90446258
REV 10
SHEET 11
CROSS REF NO 009
CODE IDENT 15920
C
1791A J10
+DATA 2^0 → 2^7
+ADDRESS 2^0 → 2^5
-SELECT CONTROLLER
-CONTROLLER READ
-CONTROLLER WRITE
-RESET
+ 0/4
+SINGLE DENSITY
-TEST
+FD READY
-WRITE PROTECT
-TRACK 0
-INDEX PULSE
+HEAD LOAD TIMING
-COMPOSITE DATA
+READ CLOCK
-WRITE FAULT/SEPARATOR EN
+DISK CONTROLLER READY
-DISK INT REQUEST
+LOW WRITE CURRENT
+HEAD LOAD
+DIRECTION
+STEP
+WRITE GATE
+WRITE DATA
(PULL-UP)
OPTIONAL
DRVR 74LS244 J9
74LS04 H12B
74LS74 H9A
74LS74 H9B
74LS74 G10B
74LS04 G7C
74LS04 G7E
74LS04 H12A
74LS04 H12F
DELAY H8B 500 250
MUX 74LS153 H8A
LOC
CROSS REF NO 009

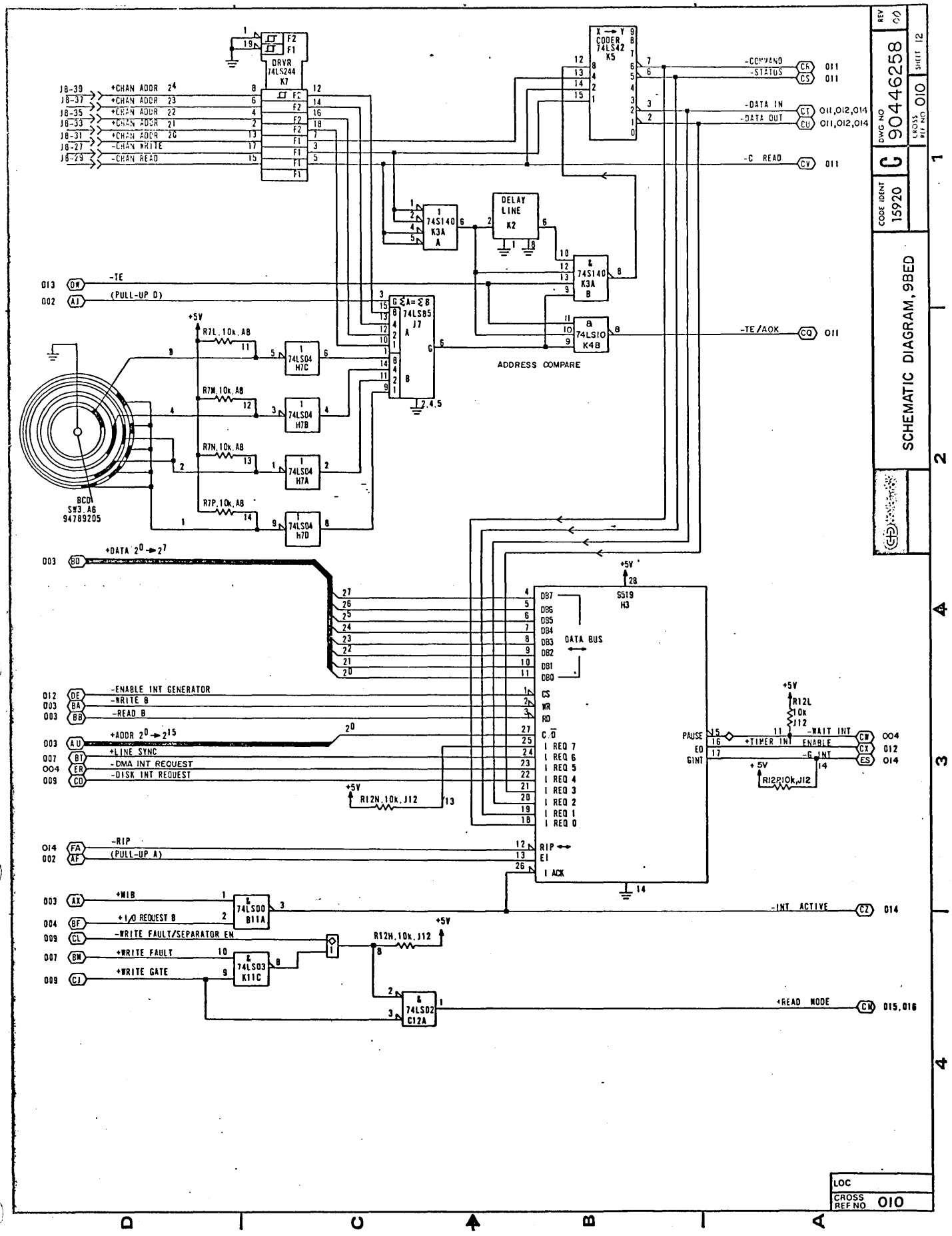
SCHEMATIC DIAGRAM, 9BED
DWG NO 90446258
CODE IDENT 15920
CROSS REF NO 010
SHEET 12
REV 00
DRVR 74LS244 K7
X → Y CODER 74LS42 K5
74S140 K3A A
DELAY LINE K2
74S140 K3A B
74LS10 K4B
74LS85 J7
ADDRESS COMPARE
74LS04 H7C
74LS04 H7B
74LS04 H7A
74LS04 H7D
BCD SW3, A6 94789205
S519 H3
DATA BUS
74LS00 B11A
74LS03 K11C
74LS02 C12A
-COMMAND
-STATUS
-DATA IN
-DATA OUT
-C READ
-TE
(PULL-UP D)
-TE/AOK
+DATA 2^0 → 2^7
-ENABLE INT GENERATOR
-WRITE B
-READ B
+ADDR 2^0 → 2^15
+LINE SYNC
-DMA INT REQUEST
-DISK INT REQUEST
-RIP
(PULL-UP A)
+WIB
+I/O REQUEST B
-WRITE FAULT/SEPARATOR EN
+WRITE FAULT
+WRITE GATE
-WAIT INT
+TIMER INT ENABLE
-G INT
-INT ACTIVE
+READ MODE
LOC
CROSS REF NO 010

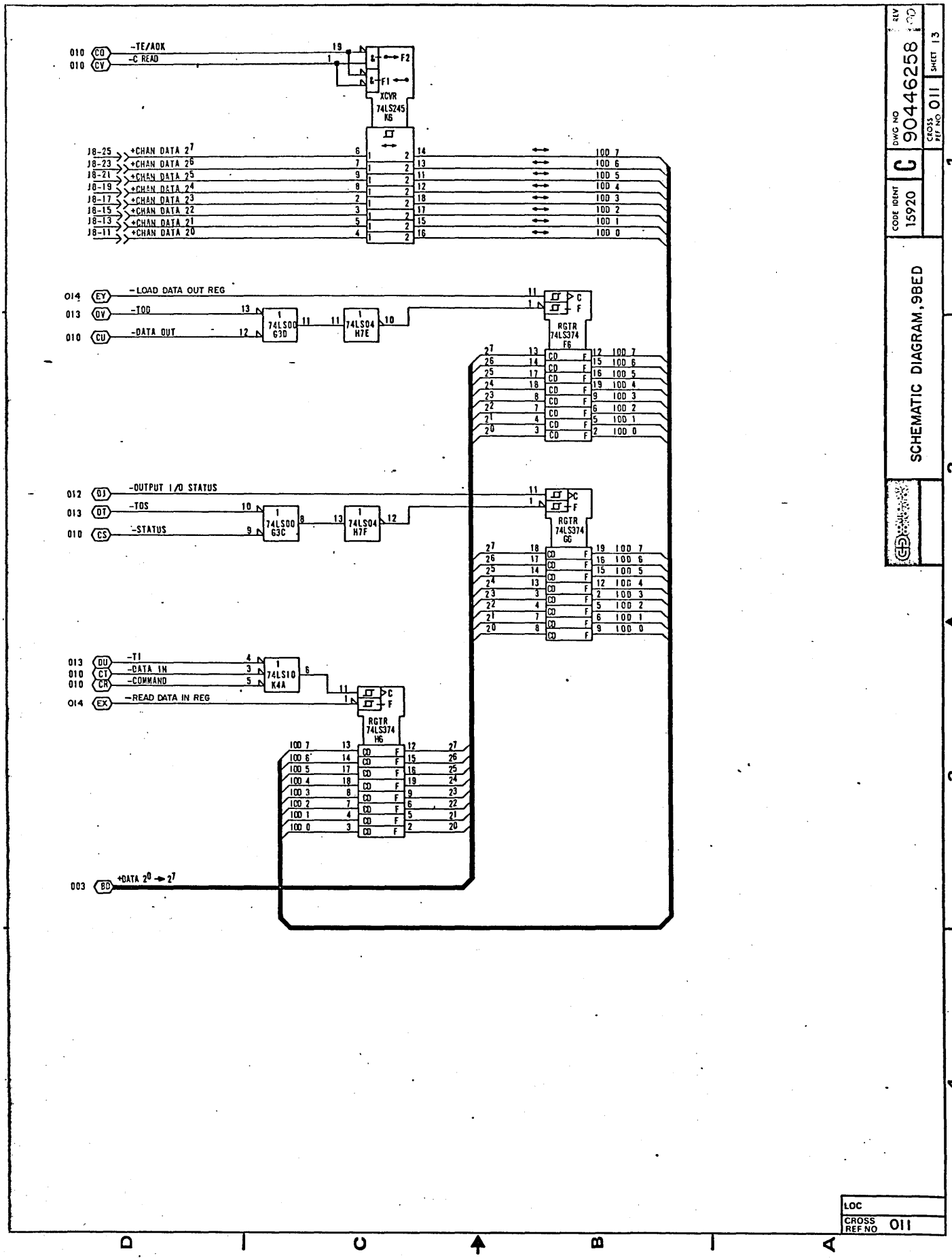
010 CQ -TE/AOK
010 CV -C READ
XCVR
74LS245
K6
J8-25 +CHAN DATA 2^7
J8-23 +CHAN DATA 2^6
J8-21 +CHAN DATA 2^5
J8-19 +CHAN DATA 2^4
J8-17 +CHAN DATA 2^3
J8-15 +CHAN DATA 2^2
J8-13 +CHAN DATA 2^1
J8-11 +CHAN DATA 2^0
014 EY -LOAD DATA OUT REG
013 DV -TOO
010 CU -DATA OUT
74LS00
G3D
74LS04
H7E
RGTR
74LS374
F6
012 DJ -OUTPUT I/O STATUS
013 DT -TOS
010 CS -STATUS
74LS00
G3C
74LS04
H7F
RGTR
74LS374
G6
013 DU -TI
010 CT -DATA IN
010 CR -COMMAND
014 EX -READ DATA IN REG
74LS10
K4A
RGTR
74LS374
H6
003 BD +DATA 2^0 → 2^7
DWG NO 90446258
REV
SHEET 13
CROSS REF NO 011
CODE IDENT 15920
C
SCHEMATIC DIAGRAM, 9BED
LOC
CROSS REF NO 011

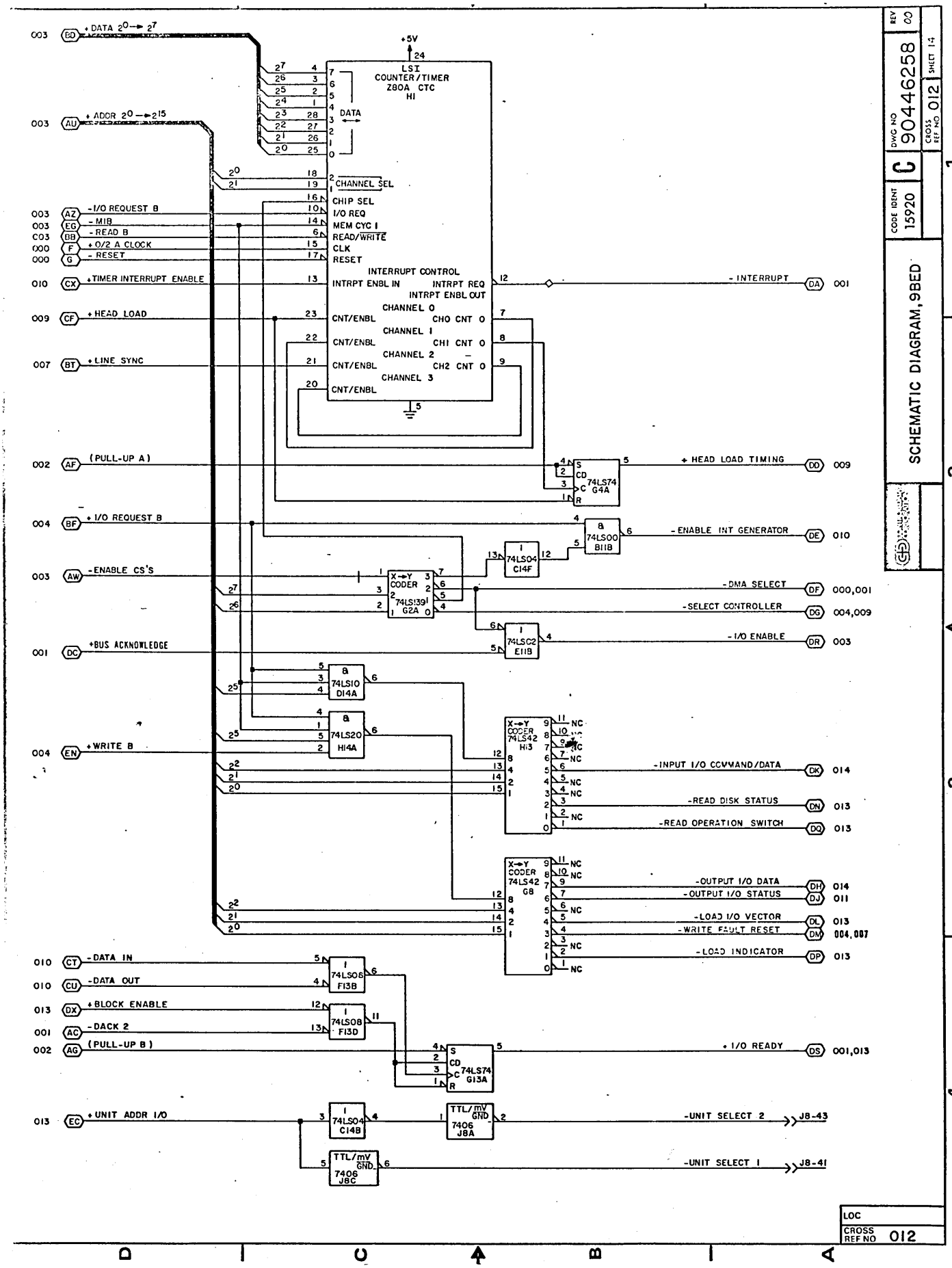
+DATA 2⁰→2⁷
+ADDR 2⁰→2¹⁵
+5V
LSI COUNTER/TIMER Z80A CTC H1
DATA
CHANNEL SEL
CHIP SEL
I/O REQ
MEM CYC 1
READ/WRITE
CLK
RESET
INTERRUPT CONTROL
INTRPT ENBL IN
INTRPT REQ
INTRPT ENBL OUT
CHANNEL 0
CNT/ENBL
CH0 CNT 0
CHANNEL 1
CH1 CNT 0
CHANNEL 2
CH2 CNT 0
CHANNEL 3
-I/O REQUEST B
-MIB
-READ B
+0/2 A CLOCK
-RESET
+TIMER INTERRUPT ENABLE
+HEAD LOAD
+LINE SYNC
(PULL-UP A)
+I/O REQUEST B
-ENABLE CS'S
+BUS ACKNOWLEDGE
+WRITE B
-DATA IN
-DATA OUT
+BLOCK ENABLE
-DACK 2
(PULL-UP B)
+UNIT ADDR I/O
-INTERRUPT
+HEAD LOAD TIMING
-ENABLE INT GENERATOR
-DMA SELECT
-SELECT CONTROLLER
-I/O ENABLE
-INPUT I/O COMMAND/DATA
-READ DISK STATUS
-READ OPERATION SWITCH
-OUTPUT I/O DATA
-OUTPUT I/O STATUS
-LOAD I/O VECTOR
-WRITE FAULT RESET
-LOAD INDICATOR
+I/O READY
-UNIT SELECT 2
-UNIT SELECT 1
74LS74 G4A
74LS00 B11B
74LS04 C14F
X→Y CODER 74LS139 G2A
74LSC2 E11B
74LS10 D14A
74LS20 H14A
X→Y CODER 74LS42 H13
X→Y CODER 74LS42 G8
74LS06 F13B
74LS08 F13D
74LS74 G13A
74LS04 C14B
TTL/mV GND 7406 J8A
TTL/mV GND 7406 J8C
J8-43
J8-41
CODE IDENT 15920
DWG NO 90446258
REV 00
SHEET 14
CROSS REF NO 012
SCHEMATIC DIAGRAM, 9BED
LOC
CROSS REF NO 012

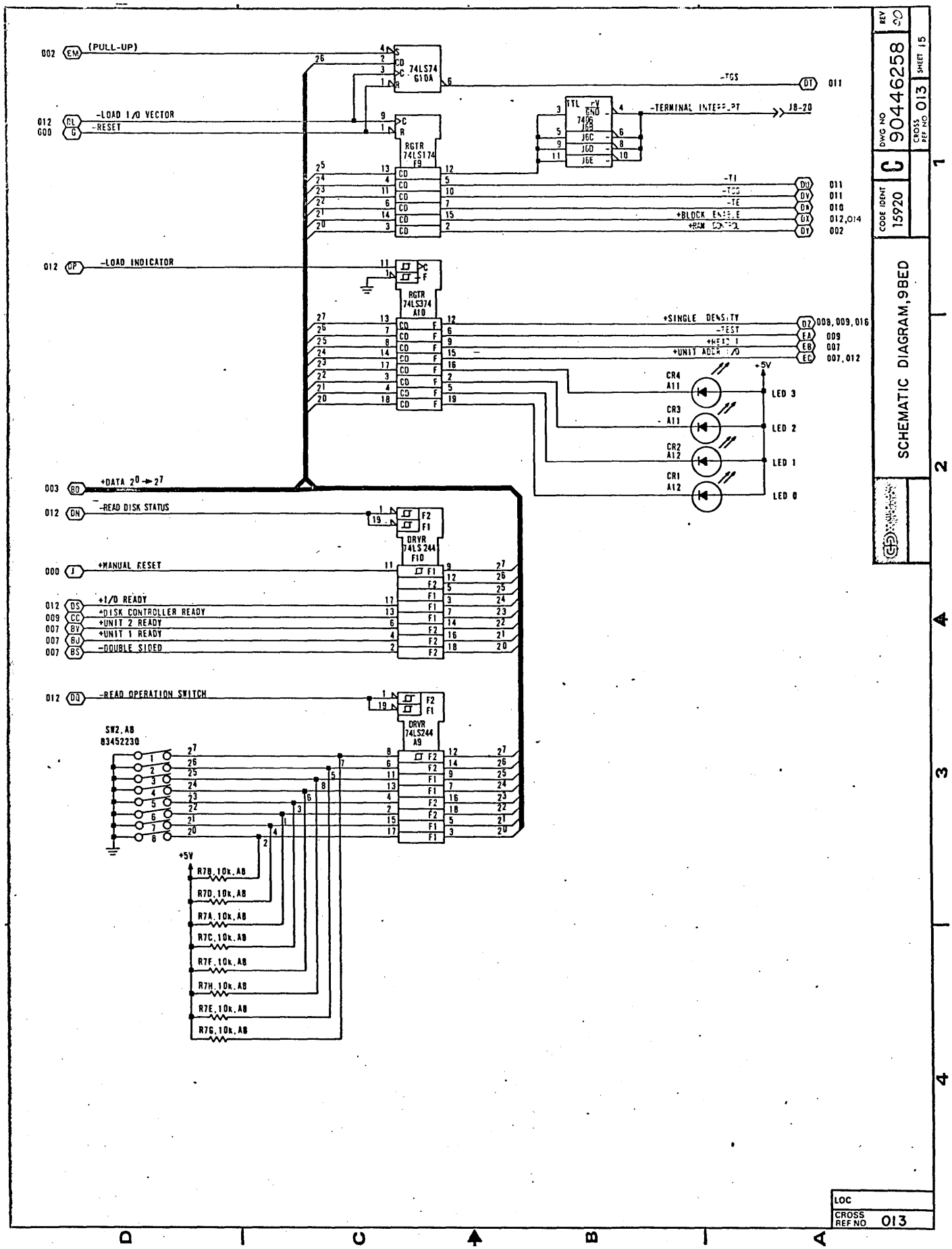
SCHEMATIC DIAGRAM,9BED
DWG NO 90446258
REV 20
SHEET 15
CROSS REF NO 013
CODE IDENT 15920
C
LOC
CROSS REF NO 013
74LS74 G10A
RGTR 74LS174 F9
7406 J6B
RGTR 74LS374 A10
DRVR 74LS244 F10
DRVR 74LS244 A9
SW2,A8 83452230
-LOAD I/O VECTOR
-RESET
-LOAD INDICATOR
+DATA 2^0 → 2^7
-READ DISK STATUS
+MANUAL RESET
+I/O READY
+DISK CONTROLLER READY
+UNIT 2 READY
+UNIT 1 READY
-DOUBLE SIDED
-READ OPERATION SWITCH
-TERMINAL INTERRUPT
+SINGLE DENSITY
-TEST
+BLOCK ENABLE
+RAM CONTROL
LED 3
LED 2
LED 1
LED 0
+5V
R7B,10k,A8
R7D,10k,A8
R7A,10k,A8
R7C,10k,A8
R7F,10k,A8
R7H,10k,A8
R7E,10k,A8
R7G,10k,A8

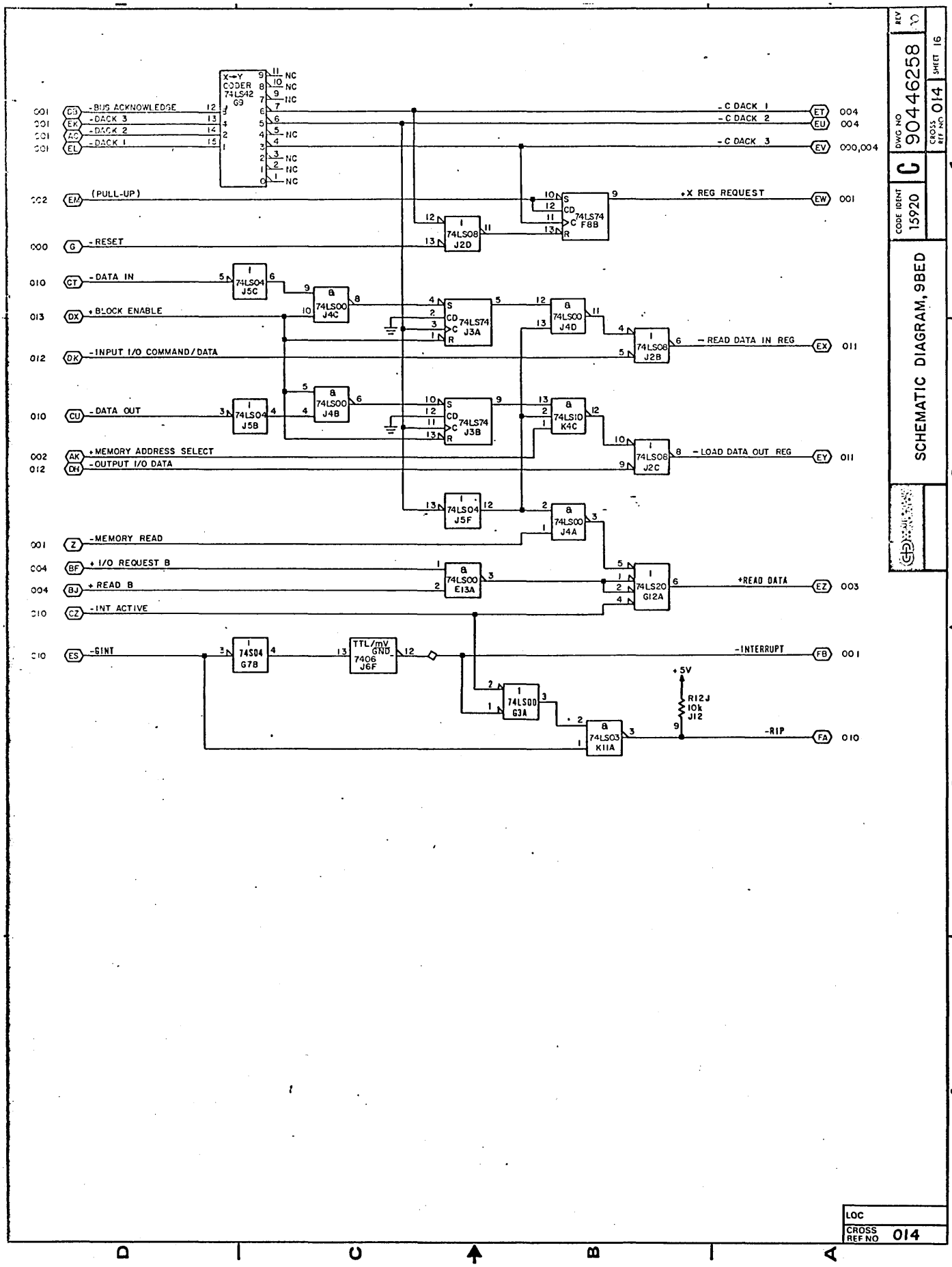
X→Y CODER 74LS42 G9
-BUS ACKNOWLEDGE
-DACK 3
-DACK 2
-DACK 1
(PULL-UP)
-RESET
-DATA IN
+BLOCK ENABLE
-INPUT I/O COMMAND/DATA
-DATA OUT
+MEMORY ADDRESS SELECT
-OUTPUT I/O DATA
-MEMORY READ
+I/O REQUEST B
+READ B
-INT ACTIVE
-GINT
-C DACK 1
-C DACK 2
-C DACK 3
+X REG REQUEST
-READ DATA IN REG
-LOAD DATA OUT REG
+READ DATA
-INTERRUPT
-RIP
74LS08 J2D
74LS74 F8B
74LS04 J5C
74LS00 J4C
74LS74 J3A
74LS00 J4D
74LS08 J2B
74LS04 J5B
74LS00 J4B
74LS74 J3B
74LS10 K4C
74LS08 J2C
74LS04 J5F
74LS00 J4A
74LS00 E13A
74LS20 G12A
74S04 G7B
7406 J6F
74LS00 G3A
74LS03 K11A
+5V
R12J 10k J12
DWG NO 90446258
CROSS REF NO 014
SHEET 16
REV
CODE IDENT 15920
SCHEMATIC DIAGRAM, 9BED
LOC
CROSS REF NO 014

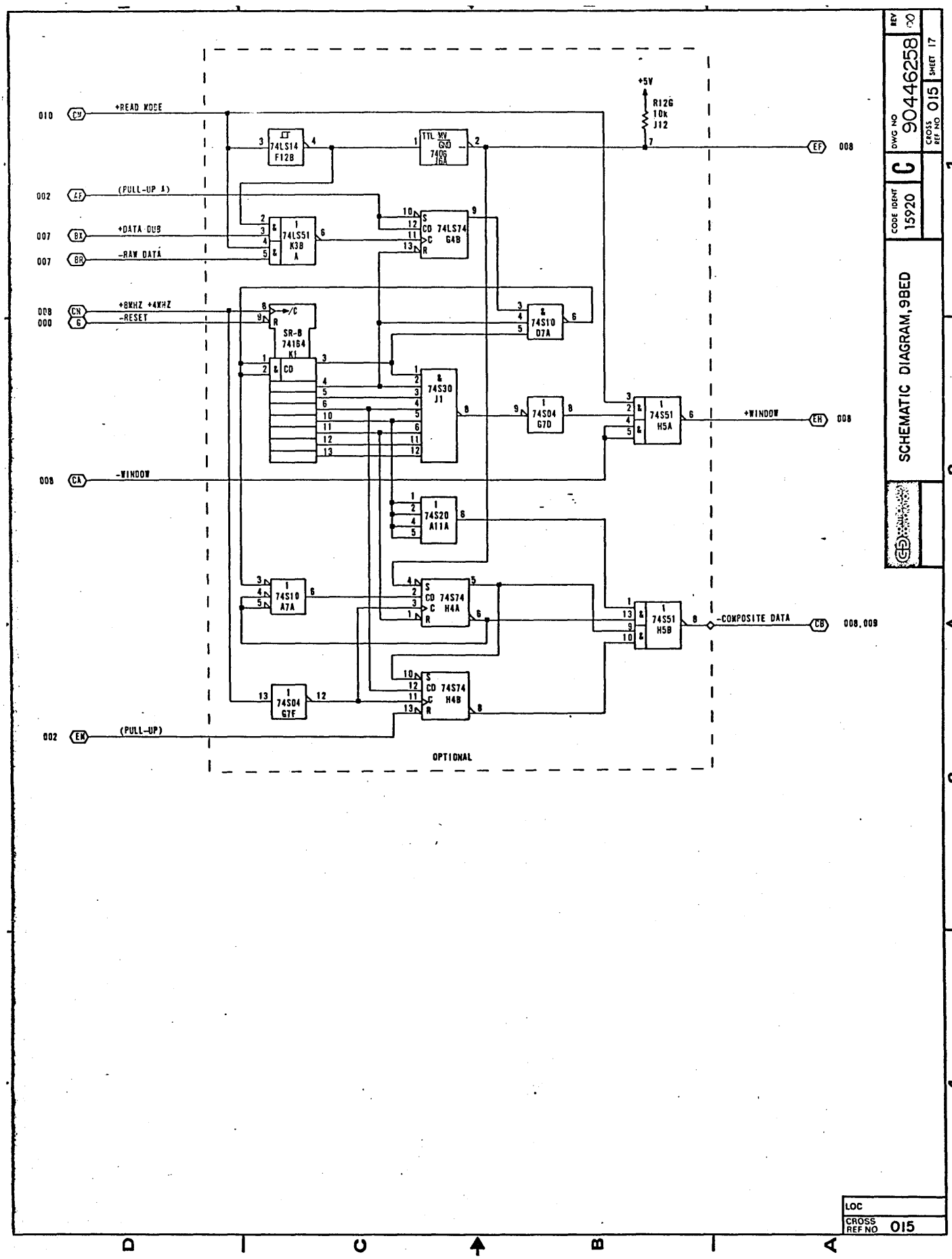
+READ MODE
(PULL-UP 1)
+DATA DUB
-RAW DATA
+8KHZ +4KHZ
-RESET
-WINDOW
(PULL-UP)
+5V
R12G
10k
J12
74LS14
F12B
7406
16A
74LS51
K3B
A
74LS74
G4B
SR-8
74164
K1
74S10
D7A
74S30
J1
74S04
G7D
74S51
H5A
+WINDOW
74S20
A11A
74S10
A7A
74S74
H4A
74S51
H5B
-COMPOSITE DATA
74S04
G7F
74S74
H4B
OPTIONAL
SCHEMATIC DIAGRAM,9BED
DWG NO 90446258
CODE IDENT 15920
CROSS REF NO 015
SHEET 17
REV
LOC
CROSS REF NO 015

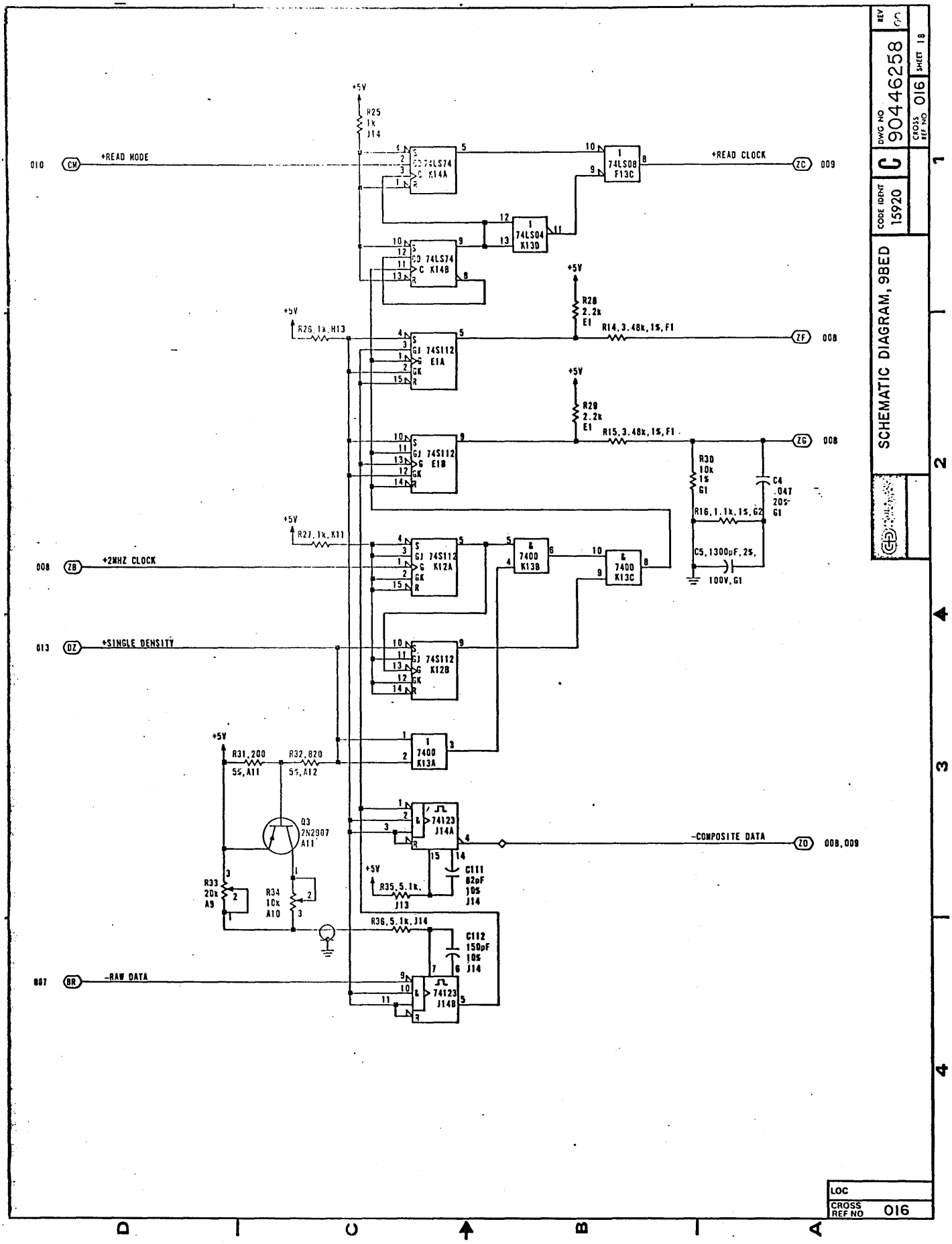
SCHEMATIC DIAGRAM, 9BED
DWG NO 90446258
CROSS REF NO 016
SHEET 18
REV
CODE IDENT 15920
C
+READ MODE
+READ CLOCK
+2MHZ CLOCK
+SINGLE DENSITY
-RAW DATA
-COMPOSITE DATA
74LS74 K14A
74LS74 K14B
74LS08 F13C
74LS04 K13D
74S112 E1A
74S112 E1B
74S112 K12A
74S112 K12B
7400 K13A
7400 K13B
7400 K13C
74123 J14A
74123 J14B
R25 1k J14
R26 1k H13
R27 1k K11
R28 2.2k E1
R29 2.2k E1
R14 3.48k 1% F1
R15 3.48k 1% F1
R30 10k 1% G1
R16 1.1k 1% G2
C4 .047 20% G1
C5 1300pF 2% 100V G1
R31 200 5% A11
R32 820 5% A12
Q3 2N2907 A11
R33 20k A9
R34 10k A10
R35 5.1k J13
R36 5.1k J14
C111 82pF 10% J14
C112 150pF 10% J14
LOC
CROSS REF NO 016

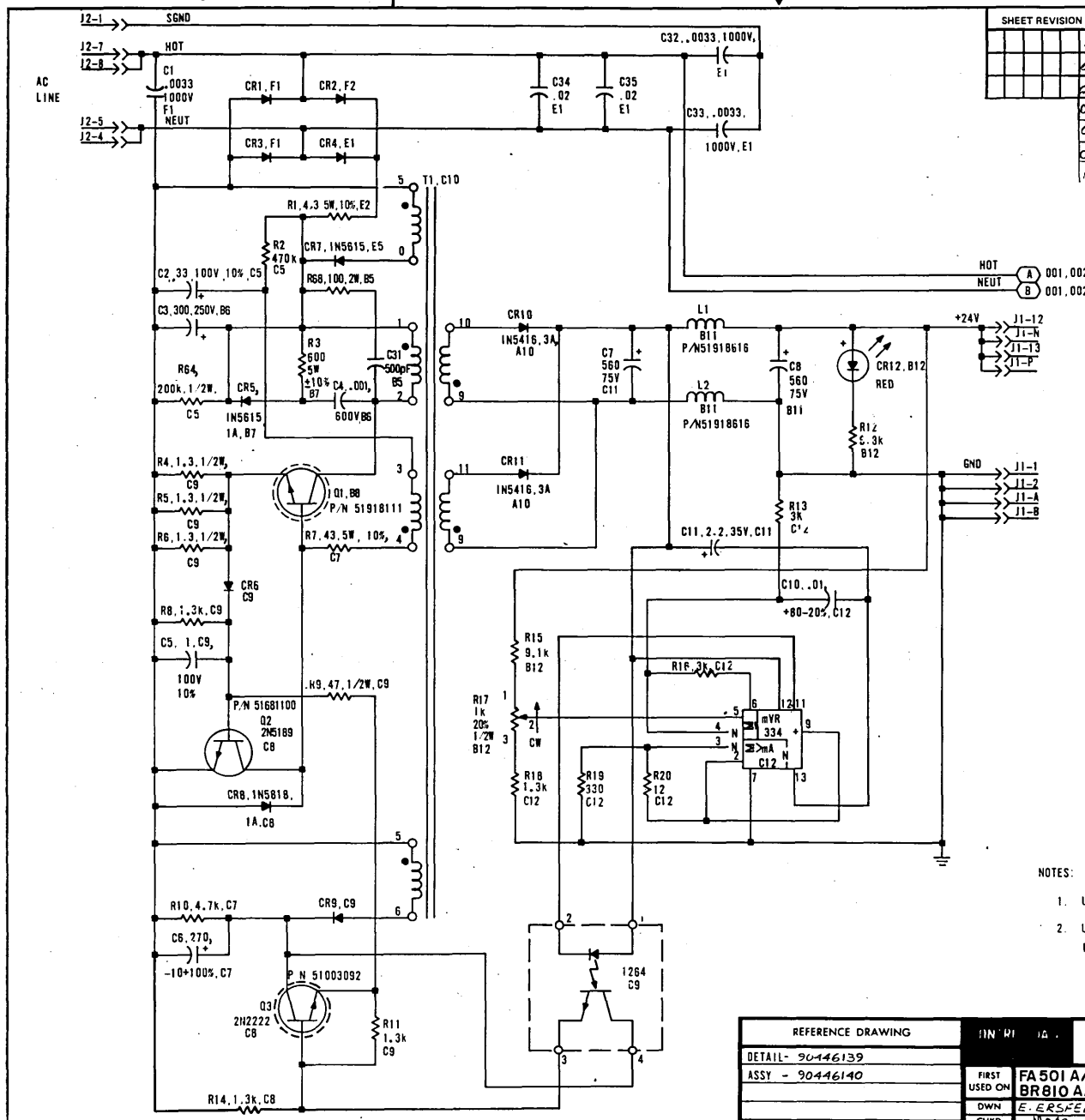

SHEET REVISION STATUS							REVISION RECORD						
					3	2	1	REV	CO	DESCRIPTION	DRFT	DATE	CHKD	APP
					00	00	00	00	Sec. 4.8	RELEASED CLASS "B"		7/26/79		
					01	01	01	01	51914	REVISED PER ECO	RM	12/4/79		
					02	02	02	02	51071	REVISED PER ECO	EE	4/25/80		
					02	02	03	03	51102	REVISED PER ECO	EE	5/28/80		
					02	02	04	04	51109	CHANGE C34-C35 TO .02	DS	6/4/80		
					A	A	A	A	11565-80	RELEASED CLASS "A"		3-31-85		

NOTES:

1. UNLESS OTHERWISE NOTED ALL LEDS TO BE P/N 19171231.
2. UNLESS OTHERWISE NOTED ALL DIODES TO BE P/N 95637304 1N4004 1.1V/1A.

REFERENCE DRAWING			
DETAIL- 90446139			
ASSY - 90446140			
COMPONENTS, EXCEPT AS NOTED			
	TOLERANCE	VALUE	RATING
RES	±5%	OHMS	1/4W
CAP	±20%	µF	25V
—	—	—	—

FIRST USED ON	FA501 A/B BR810 A/B	
DWN	E. ERSFELD	10-12-79
CHKD	[illegible]	10-19-79
ENGR	[illegible]	10/25/79
MFG	[illegible]	6/7/85
APPR	E. M. [illegible]	6-25-80

TITLE

SCHEMATIC DIAGRAM, 9BKD (PFDS POWER SUPPLY)

CODE IDENT		DRAWING NO
15920	C	90446138

SCALE — | CROSS REF NO 000 | SHEET 1 OF 3

90446138

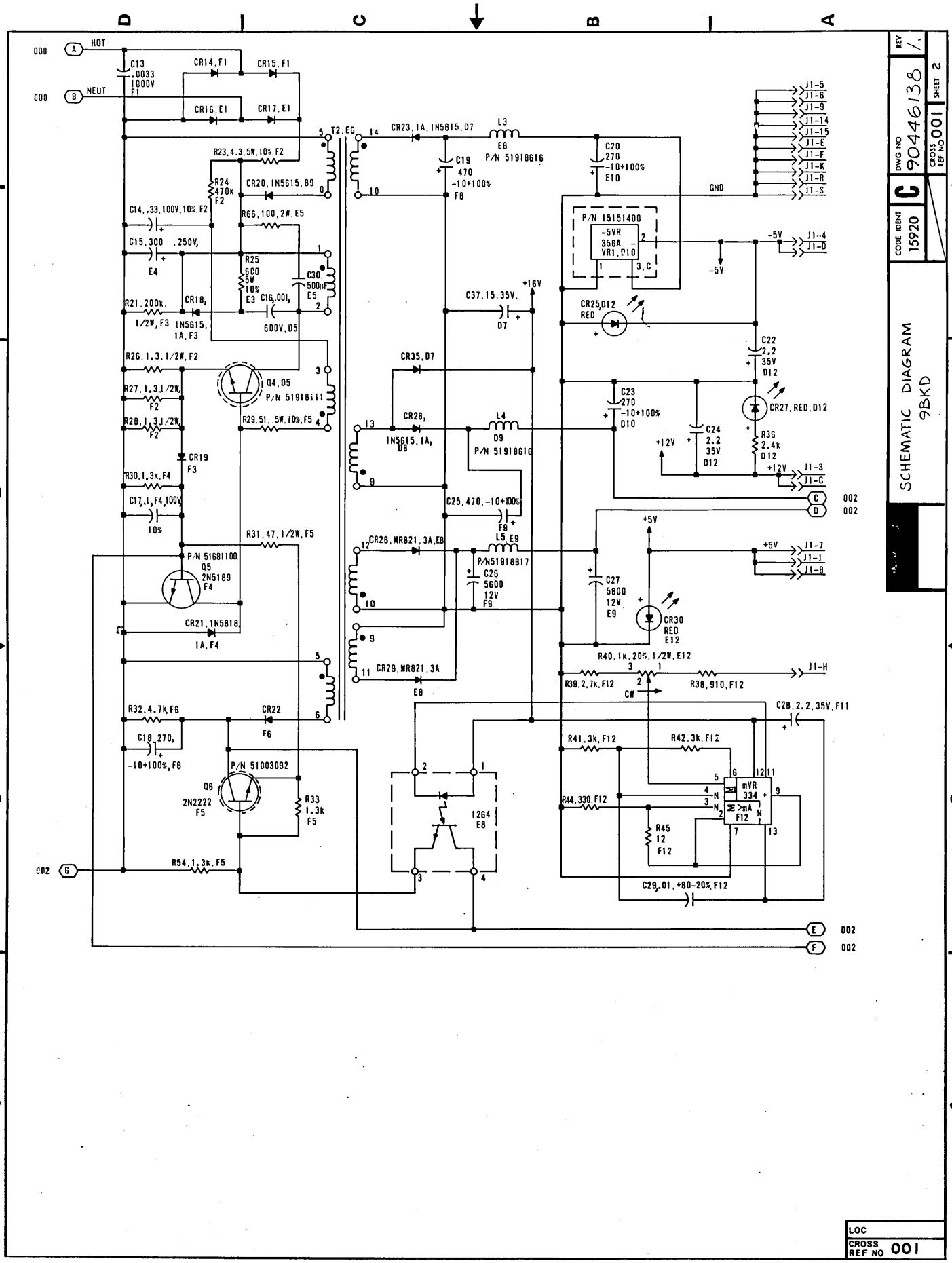
HOT
NEUT
C13 .0033 1000V F1
CR14, F1
CR15, F1
CR16, E1
CR17, E1
T2, EG
R23, 4.3, 5W, 10%, F2
R24 470k F2
CR20, 1N5615, B9
C14, .33, 100V, 10%, F2
R66, 100, 2W, E5
C15, 300 .250V, E4
R25 600 5W 10% E3
C30 500µF E5
C16, .001, 600V, D5
R21, 200k, 1/2W, F3
CR18, 1N5615, 1A, F3
R26, 1.3, 1/2W, F2
R27, 1.3, 1/2W, F2
R28, 1.3, 1/2W, F2
Q4, D5
P/N 51918611
R29, 51, 5W, 10%, F5
CR19 F3
R30, 1.3k, F4
C17, .1, F4, 100V 10%
R31, 47, 1/2W, F5
P/N 51681100
Q5 2N5189 F4
CR21, 1N5818 1A, F4
R32, 4.7k, F6
CR22 F6
C18, 270, -10+100%, F6
P/N 51003092
Q6 2N2222 F5
R33 1.3k F5
R54, 1.3k, F5
CR23, 1A, 1N5615, D7
C19 470 -10+100% F8
L3 E8 P/N 51918616
C20 270 -10+100% E10
GND
P/N 15151400
-5VR 356A VR1, D10
-5V
+16V
C37, 15, 35V, D7
CR25, D12 RED
C22 2.2 35V D12
CR27, RED, D12
R36 2.4k D12
+12V
CR35, D7
CR26, 1N5615, 1A, D8
L4 D9 P/N 51918616
C23 270 -10+100% D10
C24 2.2 35V D12
C25, 470, -10+100% F9
CR28, MR821, 3A, E8
L5, E9 P/N51918817
C26 5600 12V F9
C27 5600 12V E9
+5V
CR30 RED E12
CR29, MR821, 3A E8
R40, 1k, 20%, 1/2W, E12
R39, 2.7k, F12
R38, 910, F12
CW
C28, 2.2, 2.5V, F11
R41, 3k, F12
R42, 3k, F12
R44, 330, F12
mVR 334 F12
R45 12 F12
C29, .01, +80-20%, F12
1264 E8
J1-5
J1-6
J1-9
J1-14
J1-15
J1-E
J1-F
J1-K
J1-R
J1-S
J1-4
J1-D
J1-3
J1-C
J1-7
J1-J
J1-8
J1-H
DWG NO 90446138
REV 1
SHEET 2
CROSS REF NO 001
CODE IDENT 15920
C
SCHEMATIC DIAGRAM 9BKD
LOC
CROSS REF NO 001

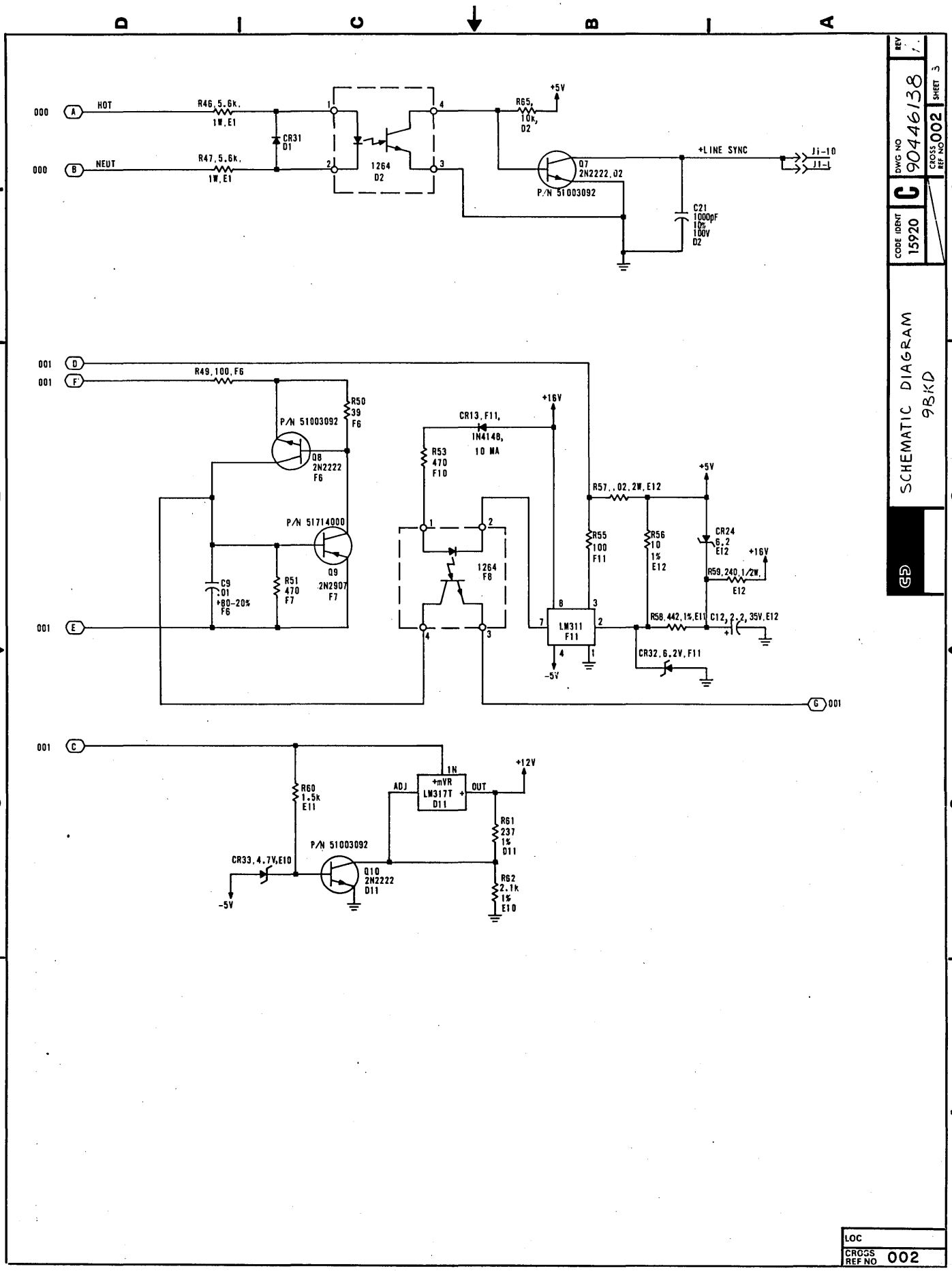
HOT
NEUT
R46, 5.6k, 1W, E1
R47, 5.6k, 1W, E1
CR31 D1
1264 D2
R65, 10k, D2
+5V
Q7 2N2222, D2
P/N 51003092
+LINE SYNC
J1-10
J1-1
C21 1000pF 10% 100V D2
R49, 100, F6
R50 39 F6
Q8 2N2222 F6
P/N 51714000
Q9 2N2907 F7
C9 .01 +80-20% F6
R51 470 F7
R53 470 F10
CR13, F11, 1N4148, 10 MA
+16V
1264 F8
R57, .02, 2W, E12
R55 100 F11
R56 10 1% E12
CR24 6.2 E12
R59, 240, 1/2W, E12
LM311 F11
R58, 442, 1%, E11
C12, 2.2, 35V, E12
CR32, 6.2V, F11
-5V
R60 1.5k E11
CR33, 4.7V, E10
Q10 2N2222 D11
LM317T D11
+mVR
ADJ
OUT
+12V
R61 237 1% D11
R62 2.1k 1% E10
SCHEMATIC DIAGRAM 98KD
DWG NO 90446138
CODE IDENT 15920
CROSS REF NO 002
SHEET 3
REV 1.
LOC
CROSS REF NO 002

SHEET REVISION STATUS	REVISION RECORD					
	REV	CO	DESCRIPTION	DRFT	DATE	CHKD	APP
	00	50004-68	RELEASED CLASS "B"		9/22/80	-	
	01	51041	REVISED PER ECO	P.H	3/10/80		
	A	11565-87	RELEASED CLASS "A"		7/16/80		

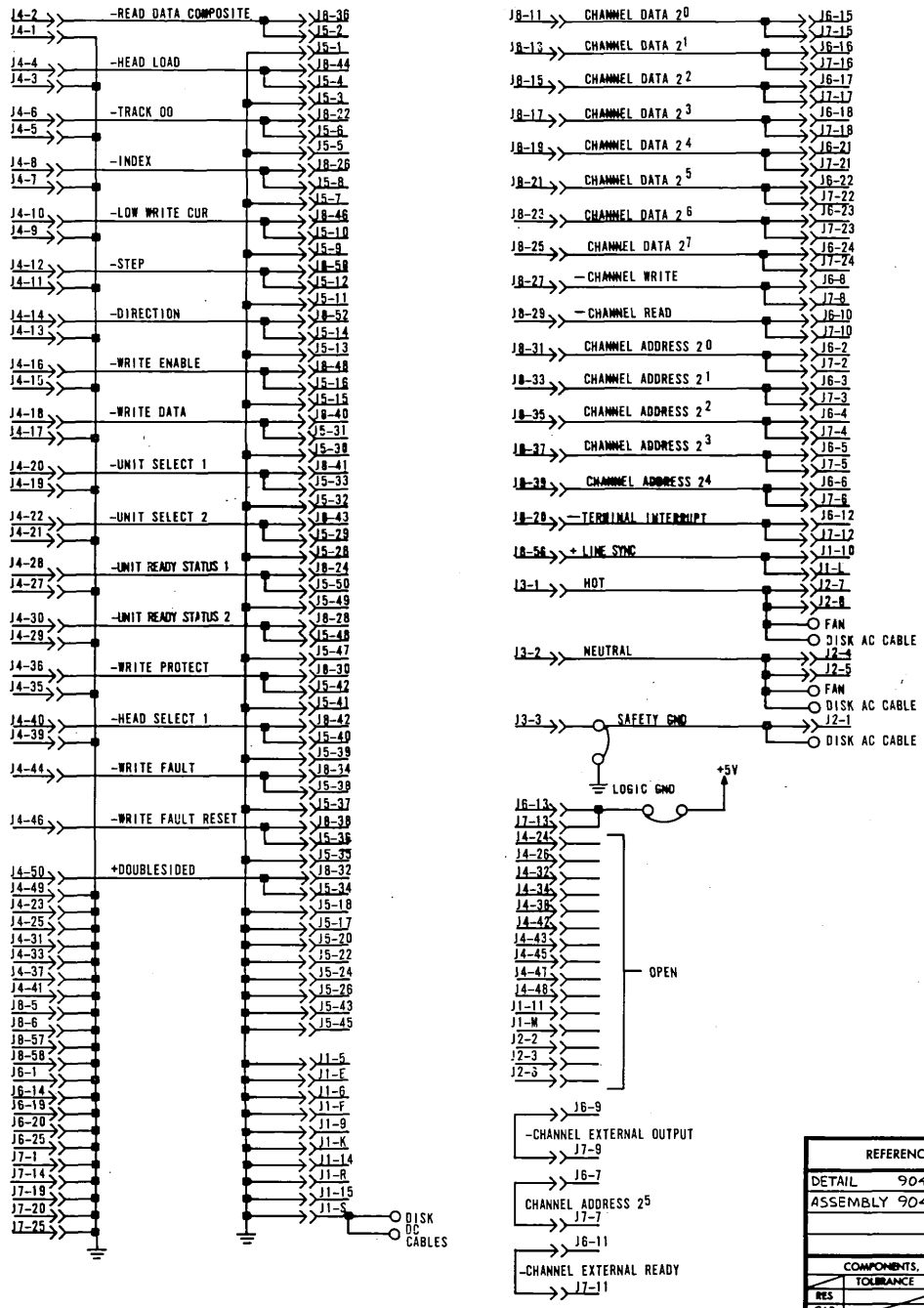

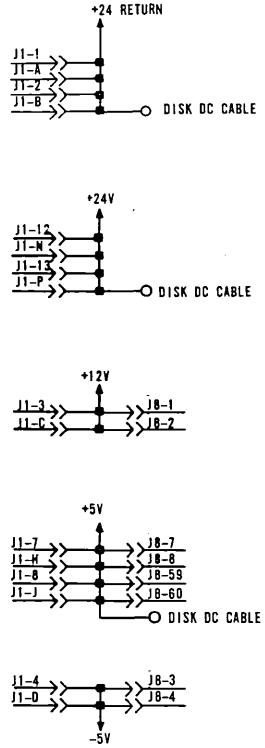

REFERENCE DRAWING			
DETAIL 90446142			
ASSEMBLY 90446143			
COMPONENTS, EXCEPT AS NOTED	TOLERANCE	VALUE	RATING
RES			
CAP			

FIRST USED ON		
DWN	E. ERSFELD	1-4-80
CHKD		1-17-80
ENGR		3-20-80
MFG		2-13-80
APPR	E. H.	2-10-80
MECH		3/10/80

TITLE

SCHEMATIC DIAGRAM (9BMD)
(FDD CONTROLLER BACKPLANE)

CODE IDENT 15920 | C | DRAWING NO 90446141

SCALE | CROSS REF | SHEET 1 OF 1

90446141

62949100

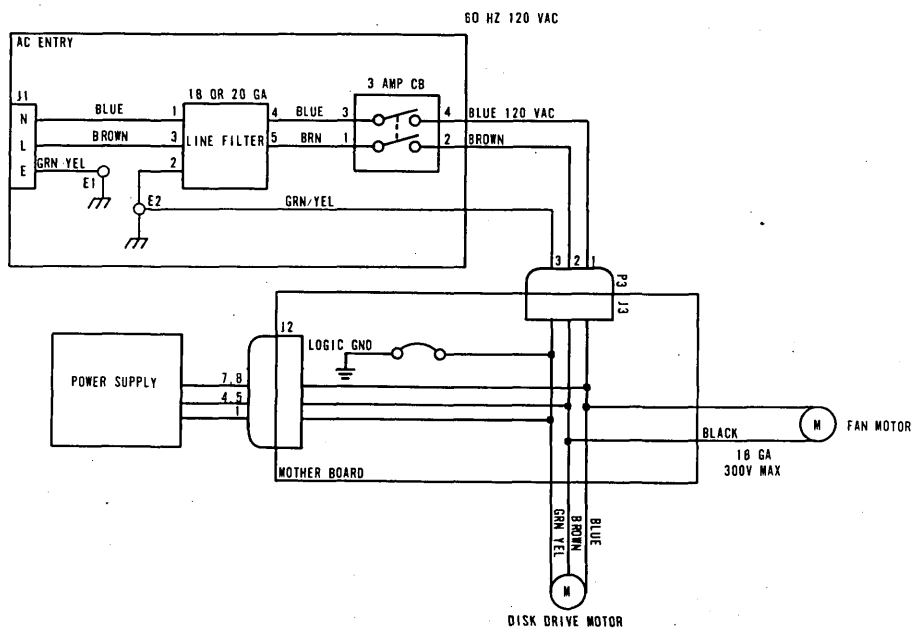

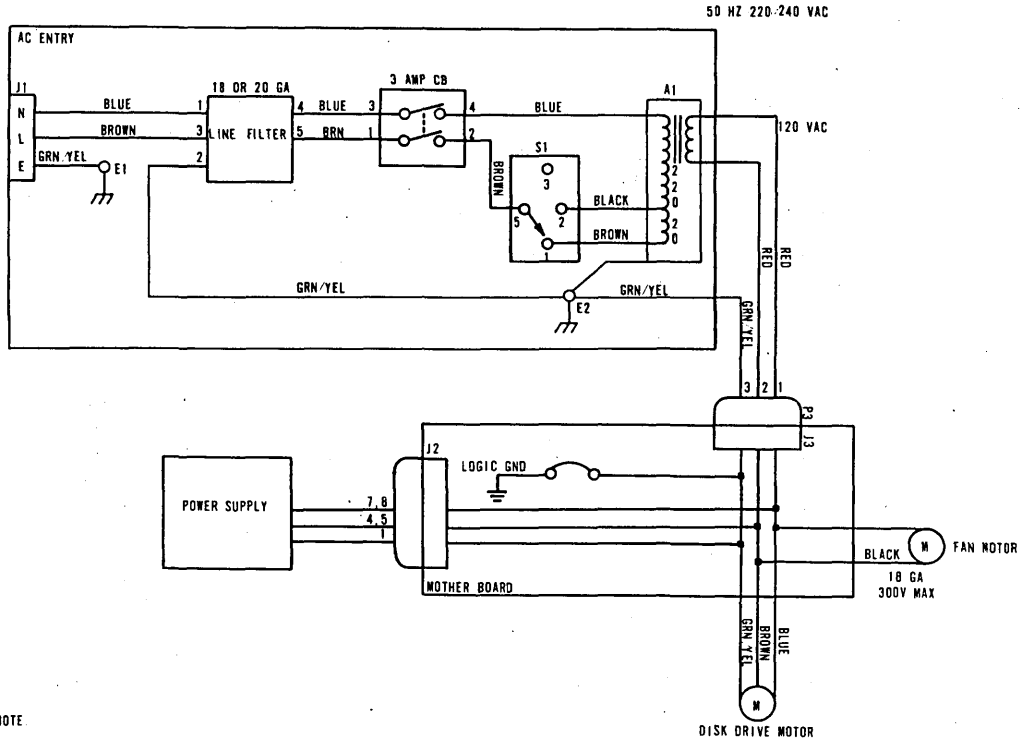

NOTE

1. ALL WIRES ARE 18 GA. 600V UNLESS OTHERWISE MARKED

REVISION RECORD

REV	∞	DESCRIPTION	DRFT	DATE	CHKD	APP
A	12754-76	RELEASED CLASS "A"		9-3-80		

SHEET REVISION STATUS

TITLE: 50/60 HZ A.C. POWER WIRING

CODE IDENT 15920 | DRAWING NO C 62201057 | SHEET 1 OF 1

CROSS REF NO | SCALE

FA501-A/B

FIRST USED ON | DWN M. DIETZ 9-2-80 | CHKD 9-3-80 | ENGR 9-3-80 | MFG | APPR 9-3-80

REFERENCE DRAWING

COMPONENTS, EXCEPT AS NOTED

	TOLERANCE	VALUE	RATING
RES			
CAP			

62949100

This section provides information necessary to perform on-site maintenance on the flexible disk subsystem. The material presented assumes familiarity with the PLATO system and basic maintenance techniques including use of common CE tools and test equipment. The maintenance information covers checks, adjustments, removal, and replacement of the field-replaceable components as directed by the associated structured analysis method (SAM) listings for the subsystem. Information is organized under the following major headings:

- General Maintenance Information
- Diagnostic and Corrective Maintenance

GENERAL MAINTENANCE INFORMATION

The following paragraphs provide information that the customer engineer should be familiar with before performing maintenance on the terminal. Topics discussed are:

- Suggested Emergency Maintenance Procedure
- Safety Precautions
- Maintenance Tools and Materials
- MOS Circuit-Handling Precautions
- Maintenance Aids
- Location of Major Assemblies

SUGGESTED EMERGENCY MAINTENANCE PROCEDURE

The following procedure provides suggested steps for the customer engineer (CE) to follow when responding to a customer request for maintenance on the subsystem.

Before Leaving For Customer Site

Before leaving for the customer site, the CE should call the customer and talk to the person operating the subsystem at the time the malfunction occurred, then:

1. Determine the following:

   a. Type of symptoms subsystem exhibited to indicate that a malfunction occurred.

   b. Whether subsystem is operating and what symptoms, if any, are present when an attempt is made to operate.

2. Decide course of action to take, for example:

   a. Go to customer site and begin troubleshooting.

   b. Deduce that subsystem itself is probably not at fault and most likely cause of problem is either terminal communication lines or a power reduction or loss. In either case, CE can notify responsible party (common carrier or customer) of problem.

   c. Decide that an error in operating procedure, rather than equipment failure, is probably cause of malfunction, and notify customer of correct operating procedure.

3. If a site maintenance trip is required, CE should try to determine a probable cause for failure and gather necessary tools, manuals, and spare parts that may be needed.

Upon Arriving At Customer Site

Upon arriving at the customer site, the CE should locate the appropriate supervisory personnel and again talk to the subsystem operator concerning the malfunction, then:

1. Visually inspect subsystem for correct input/output and power cable connections.

2. Verify that a malfunction does exist, and then begin to troubleshoot subsystem.

3. After source of malfunction is corrected, CE should:

   a. Run diagnostic self-test routines and appropriate PLATO DIAG tests to ensure that subsystem is operational.

   b. Demonstrate to customer that subsystem is now operating properly within system.

SAFETY PRECAUTIONS

WARNING

Observe the following safety precautions at all times. Failure to do so may cause equipment damage and/or personal injury.

- Hazardous voltages exist in the subsystem. Do not attempt repair unless qualified to do so.
- Exercise caution any time checks or adjustments are being made to terminal when power is applied.
- Always turn power off and disconnect ac power cord when removing/replacing components or cables.

MAINTENANCE TOOLS AND MATERIALS

The maintenance procedures require the use of metric tools and common CE test equipment. No special materials are required.

MOS CIRCUIT-HANDLING PRECAUTIONS

Special handling procedures are necessary for printed-circuit cards containing metal-oxide semiconductor (MOS) integrated circuits. These ICs are susceptible to damage from static electricity. Observe the following precautions when handling the controller board:

- Turn power off before removing/installing or otherwise connecting/disconnecting any circuits.

- Ensure that any item that comes in contact with card is electrically grounded.
- Touch metal chassis frame to bleed off any accumulated static charge before handling card and continue to touch chassis while removing/installing card.
- Handle card only by a noncircuit portion. Connector pins and circuit paths must not be touched.
- Place card in a special conductive envelope whenever card is removed from chassis.

MAINTENANCE AIDS

There is no scheduled maintenance for the subsystem. In the event of failure, the primary maintenance aids are the voltage LED indicators, self-test routines, and DIAG Flexible Disk Diagnostic tests. These aids in conjunction with the SAM troubleshooting listings are structured to isolate the failure to a field-replaceable component/assembly and to provide a procedure number reference to the applicable maintenance procedure to be used for correcting the malfunction. Refer to the Diagnostic and Corrective Maintenance heading for organization of this material.

LOCATION OF MAJOR ASSEMBLIES

Figure 6-1 shows the location of the major assemblies within the subsystem.

DIAGNOSTIC AND CORRECTIVE MAINTENANCE

The following paragraphs describe the diagnostic self-test routines, the DIAG Flexible Disk Diagnostic tests, provide an explanation of the SAM format used for troubleshooting information, and describe the organization of the SAMs and procedures.

DIAGNOSTIC SELF-TEST ROUTINES

The subsystem contains nine diagnostic tests stored in ROM. The starting address is at 0000_{16}. Diagnostic execution is under control of the diagnostic control switches on the controller

board. Status of the diagnostic tests is indicated by the four LEDs also located on the controller board. Refer to section 2 for a detailed description of the diagnostic control switches and LED indicators. The following paragraphs provide a description of the various test routines.

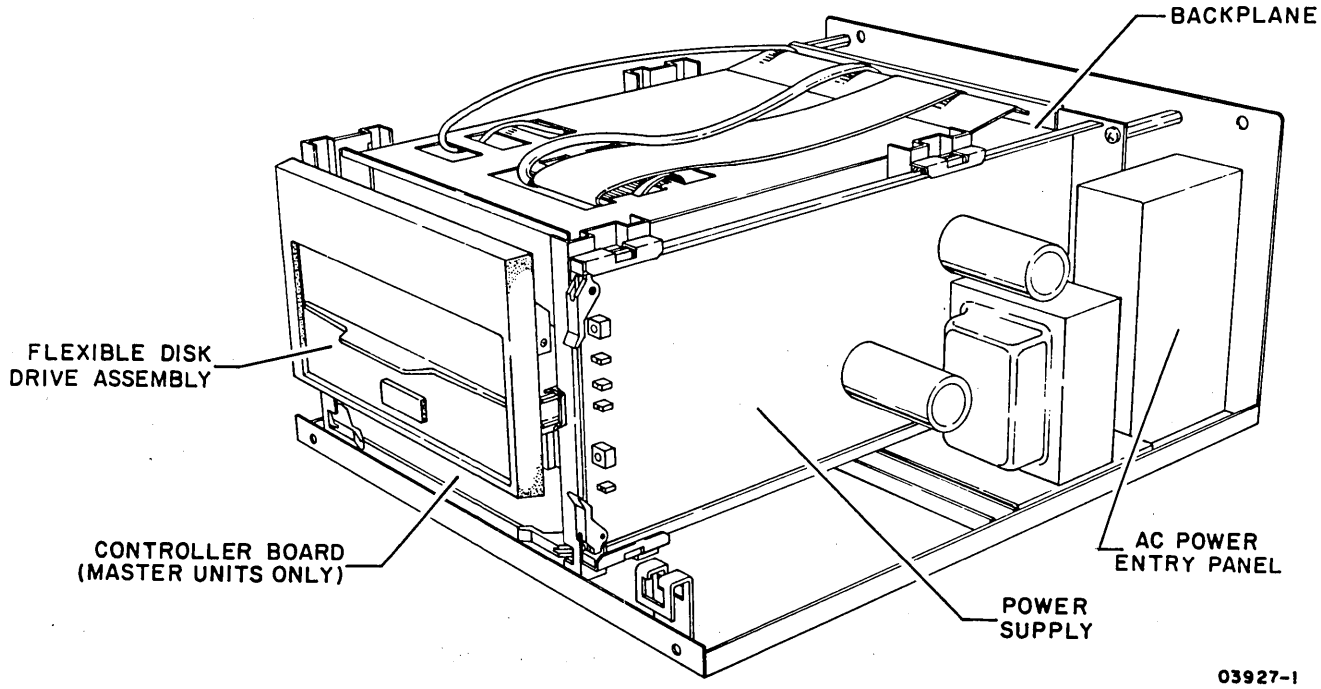

NOTE: COVER AND FRONT PANEL REMOVED FOR CLARITY.

Figure 6-1. Location of Assemblies in Subsystem

LED Test

All four LEDs light momentarily following a power application and after a master reset to test the indicators.

Test 0 - ROM Checksum

The ROM checksum routine tests ROM for the correct checksum value of the stored contents.

Test 1 - RAM Test

Test 1 checks RAM memory (as specified by the diagnostic control switches) for correct operation. This test uses the diagnostic control switches and LEDs to isolate to a failing RAM chip. The first level of error detection is to a specific RAM bank, then to the failing chip within that bank.

Test 2 - Interrupt Generator

Test 2 checks for interrupts by performing writes and reads to the available registers in the interrupt controller IC.

Test 3 - Flexible Disk Controller

Test 3 checks the flexible disk controller IC by performing writes and reads to all available registers in the IC.

Test 4 - DMA Test

Test 4 reads data from the flexible disk controller IC data register to memory using DMA channels 1 and 3.

Test 5 - I/O Loopback Test

Test 5 tests the basic I/O capabilities by interfacing the input/output registers and transferring data via the I/O data bus and checking status.

Test 6 - CTC Test

Test 6 checks the counter/timer circuit by loading a count value and determining that the proper interrupt is generated at count 0.

Test 7 - Writing and Reading the Disk

Test 7 checks for a ready disk drive, then seeks side 1, track 76, last sector and executes writes and reads using the disk DMA channel. This surface area is reserved on all diskettes; therefore, no alteration is made to stored disk data.

DIAG FLEXIBLE DISK DIAGNOSTIC TESTS

Testing can be performed using downline-loaded diagnostics from the PLATO system. Use lesson DIAG to call up the flexible disk diagnostic tests. This diagnostic loads and tests information via the terminal parallel I/O channel. Two modes are tested, DMA operations and interrupt routines. Refer to checkout information in section 3 for details of diagnostic operation.

EXPLANATION OF SAM FORMAT

A SAM listing is a specialized format used to present troubleshooting information in a logical manner. Figure 6-2 illustrates the basic SAM format. Any applicable assumptions or advisory information is provided in the header information of the SAM.

To interpret a SAM, start at the top of the page and determine the response for the first question posed. Then follow the appropriate dashed line beneath the Y or N response. Answer the next question, etc. until the action numbers are reached. Perform the action(s) listed in that column in numerical order to correct the problem.

ORGANIZATION OF SAMs AND PROCEDURES

The SAMs and maintenance procedures are organized in two separate subsections of this manual as follows:

- SAM Listings (section 6A)
- Maintenance Procedures (section 6B)

FIRST TROUBLESHOOTING QUESTION

FIRST ACTION TO BE PERFORMED FOR A NO RESPONSE TO STEP 002

YES OR NO RESPONSE FOR QUESTION BEING ASKED

SAM STEP NUMBER (USED FOR REFERENCING ONLY)

FIRST ACTION TO BE PERFORMED IN THIS COLUMN

UNDERLINE INDICATES THE LAST ACTION OF A NUMERICAL SEQUENCE OF ACTIONS IN A GIVEN COLUMN

UNDERLINE ALSO USED TO INDICATE THAT ONLY ONE ACTION IS TO BE PERFORMED

INDICATES SAM IS CONTINUED ON PAGE 2, COLUMN B

SAM FTP1-1

SAM FTP1 INITIAL TERMINAL TROUBLESHOOTING CHECKS

This SAM is the initial entry document for troubleshooting terminal problems. It assumes that all internal switches are set as required by the FTP/80 application and that terminal has been installed per instructions in section 3 of this manual.

001	Y	N	Do all equipments in terminal power on correctly (procedure FTP1)?
002	Y	N	Does any equipment receive power?
003	1		Check that terminal ac power cord is plugged into site outlet and that site power is available.
004	2		Check for tripped main circuit breaker on ac entry assembly. • If tripped and unable to reset, disconnect all loads from ac entry assembly one at a time and retry to isolate load fault. • If circuit breaker still trips with loads disconnected, replace ac entry assembly.
005	Y	N	Does display power on OK?
006	1		Go to SAM FTP3.
007	Y	N	Does printer power on OK?
008	1		Go to SAM FTP6.
009	Y	N	Is there a form feed power problem?
010	1		Terminal equipments power on OK.
011	1		Go to SAM FTP7.
012	Y	N	Does resident diagnostic execute following power on application to terminal? Note - diagnostic LEDs L1 and L2 should light during execution and clear at successful completion.
013	1		Check that diagnostic control switches are correctly set. See section 2.
	2 A	2 B	

62986800 4A-1

03680

Figure 6-2. SAM Example

SAMS
SECTION 6A

SAM 1 POWER FAULT ISOLATION

This SAM assumes that the ac power cord is plugged into a live site outlet and is firmly seated at the rear ac connector of the unit.

001	Y	N		Does unit circuit breaker trip when power is applied? Allow time to cool and retry before proceeding with additional steps.
002		Y	N	Are fan and drive motor running?
003			1	Check that connector J3 from ac entry panel is plugged into backplane.
004			2	Check internal ac wiring connections (see ac power wiring schematic in section 5).
005			3	Check power cord for continuity.
006			4	Check/replace circuit breaker.
007			5	Replace fan or drive unit (procedure 6) as applicable.
008		Y	N	Are all LEDs on power supply lit?
009			1	Replace power supply (procedure 5).
010		1		Check that correct power supply voltages are present. Voltages should be:
	2 A	2 B		

- +5 V ±0.1 V
- -5 V ±0.1 V
- +12 V ±0.1 V

} Test points at front edge of controller board.

- +24 V ±0.5 V — Check at J4 of drive unit (see procedure 5)

NOTE

The +5-V and +24-V outputs are adjustable. Refer to procedure 5. If correct voltages are not obtained, replace power supply (procedure 5).

	A	B		
	1	1		
011		Y	N	Is Power indicator (LED 2^0) lit on controller board (master units only)?
012			1	Replace controller board (procedure 4).
013		1		Internal power checks are OK.
014	1			Check internal wiring visually for shorts.
015	2			Unseat power supply board and retry. If circuit breaker no longer trips, replace power supply (procedure 5).
016	3			Unseat controller board (master units only) and retry. If circuit breaker no longer trips, replace controller board (procedure 4).
017	4			Disconnect J4 from disk drive unit and retry. If circuit breaker no longer trips, replace disk drive unit (procedure 6).
018	5			Refer to ac power wiring schematic in section 5 and disconnect wiring/connectors from ac entry panel, line filter, and transformer back to circuit breaker to isolate load fault. Replace defective item.

SAM 2 INTERNAL DIAGNOSTIC CHECKS (MASTER UNITS ONLY)

This SAM isolates faults detected by the internal diagnostic tests. Refer to sections 2 and 3 for information on Diagnostic Control Switches and LED Indicators, and to the Diagnostic Self-Test Routines heading in section 6 for test descriptions.

001	Y	N	Do all four LEDs at front of controller board light momentarily following a power application or a master reset?
002		1	If no LEDs light, check for power fault per SAM 1.
003		2	Replace controller board (procedure 4).
004	N	Y	Is Error LED (2^3) lit and other LEDs off? (Indicates a ROM Checksum Test 0 error.)
005		1	Replace ROM chips, Z80 chip, or controller board (procedure 4).
006	N	Y	Is Error LED (2^3) and Power LED (2^0) lit? (Indicates a RAM memory Test 1 error.) NOTE Verify that switches 2^4 and 2^5 are set correctly for number of RAM banks present. See section 3, Subsystem Installation.
007		1	Replace controller board (procedure 4), or isolate and replace bad RAM chip as follows: o Place switch 2^1 up and switch 2^2 down to display failing RAM bank in LEDs 2^0 through 2^2 (bank 0 is row A, bank 1 is row B, bank 2 is row C, and bank 3 is row D). o Place switch 2^2 up to display failing bit (chip) within bank in LEDs 2^0 through 2^2 (bit 0 is at location 6, bit 7 is at location 1. See figure 6B-4 for board layout). o Replace failing RAM chip and rerun internal diagnostic tests.
	2		
	A		

A
1

008 N Y Is Error LED (2^3) and Write LED (2^1) lit? (Indicates an Interrupt Generator Test 2 error.)

009 1 Replace controller board (procedure 4). Problem with 9519 Interrupt Controller IC or support logic.

010 N Y Is Error LED (2^3), Write LED (2^1), and Power LED (2^0) lit? (Indicates a Flexible Disk Controller Test 3 error.)

011 1 Replace controller board (procedure 4). Problem with 1791 Flexible Disk Controller IC or support logic.

012 N Y Is Error LED (2^3) and Read LED (2^2) lit? (Indicates a DMA Test 4 error.)

013 1 Replace controller board (procedure 4). Problem with 9517 DMA IC or support logic.

014 N Y Is Error LED (2^3), Read LED (2^2), and Power LED (2^0) lit? (Indicates an I/O Loopback Test 5 error.)

015 1 Replace controller board (procedure 4). Problem with support logic.

016 N Y Is Error LED (2^3), Read LED (2^2), and Write LED (2^1) lit? (Indicates a CTC Test 6 error.)

017 1 Replace controller board (procedure 4). Problem with Z80 CTC IC.

018 N Y Is Error LED (2^3), Read LED (2^2), Write LED (2^1), and Power LED (2^0) lit? (Indicates a Writing and Reading the Disk Test 7 error.)

019 1 Verify correct diagnostic control switch settings (see section 3 of manual).

020 2 Verify that flexible disk is properly formatted.

021 3 Verify that flexible disk is Write Protected (slot covered). If not Write Protected, set diagnostic control switch 2^3 up.

022 4 Replace controller board (procedure 4).

023 5 Replace disk drive unit (procedure 6).

3
A

	A	B	
	2		
024	N	Y	Is Error LED (2^3) off, and Read LED (2^2), Write LED (2^1), and Power LED (2^0) lit? (Indicates that controller logic is communicating with drive unit, but test is not complete).
025		1	Check that flexible disk is installed in drive unit (procedure 2) and access door is closed.
026		2	Replace controller board (procedure 4).
027		3	Disconnect slave unit (if applicable).
028		4	Replace disk drive unit (procedure 6)
029	N	Y	Is Power LED (2^0) lit and other LEDs off?
030		1	Indicates successful completion of resident diagnostic.
031	1		Diagnostic test error. Begin at step 001 of this SAM to isolate failure.

SAM 3 DIAG FLEXIBLE DISK DIAGNOSTIC CHECKS

This SAM provides fault isolation information for problems detected by the DIAG Flexible Disk Diagnostics. Use of this SAM assumes that the internal self-test diagnostics execute without error. Refer to section 3, Checkout, for the procedure to be used to load and execute the DIAG Flexible Disk Diagnostics.

001	N	Y	Is there a terminal log-in or diagnostic loading problem?
002		1	Refer to applicable terminal hardware maintenance manual for troubleshooting information (see preface for publication number).
003	N	Y	Is there a Disk System Not Ready to Load or Incorrect Load message displayed?
004		1	Try loading again by entering option 12 of display prompts.
005		2	Check that power is applied to flexible disk subsystem and last peripheral device connected to parallel I/O channel.
006		3	Check that no flexible disk is installed in drive unit of master or slave and perform a long master reset (press and hold Master Reset switch longer than three seconds). (1)
007		4	Check that Device Address switch of flexible disk subsystem is set correctly.
008		5	Check seating of I/O cable between terminal and flexible disk subsystem and check that terminator is installed at last peripheral device.
009		6	Reseat controller board.
010		7	Replace controller board (procedure 4).
011		8	Refer to applicable terminal hardware maintenance manual for troubleshooting information (see preface for publication number).
012	N	Y	Is there a Bad Seek message displayed?
	2A	2B	

	A	B	
	1	1	
013		1	Verify that side of flexible disk entered for seek and track number are valid (must seek only to side 0 on a single-sided disk and to a maximum track number of 76).
014		2	Check that a correctly formatted flexible disk is being used.
015		3	Possible bad flexible disk, try another disk.
016		4	Reseat controller board.
017		5	Replace controller board (procedure 4).
018		6	Replace disk drive unit (procedure 6).
019		7	Refer to applicable terminal hardware maintenance manual for additional troubleshooting information.
020	N	Y	Is there a Comm Line test error?
021		1	Reseat controller board.
022		2	Replace controller board (procedure 4).
023	N	Y	Is there a Device Address test error (Status Error)?
024		1	Check that device address entry being made matches Device Address Switch setting.
025		2	Replace controller board (procedure 4).
026	N	Y	Is there a Media Test error?
027			Replace the diskette with known good formatted diskette.
028			Check power supply voltages per procedure 5.
029			Replace controller board (procedure 4).
030			Replace flexible disk driver (procedure 6).
031	N	Y	Is there a Test Number of Sides test error?
032		1	Check flexible disk part number to verify that disk has number of sides being assumed.
033		2	Reseat controller board.
034		3	Replace controller board (procedure 4).
	3	3	
	A	B	

```
     A B
     2 2
     | |
035  | 4  Replace disk drive unit (procedure 6).
     |
036  N Y  Is there a Head Loaded Test error?
     | |
037  | 1  Reseat controller board.
     | |
038  | 2  Replace controller board (procedure 4).
     | |
039  | 3  Replace disk drive unit (procedure 6).
     |
040  N Y  Is there a Terminal Interrupt Test error?
     | |
041  | 1  Reseat controller board.
     | |
042  | 2  Check seating of parallel I/O cable and terminator
     | |  assembly.
     | |
043  | 3  Verify correct terminal operation.  If other devices
     | |  are connected to parallel I/O channel, verify that
     | |  interrupts work correctly to those devices.
     | |
044  | 4  Replace controller board (procedure 4).
     |
045  N Y  Is there a Line Sync Test error?
     | |
046  | 1  Reseat controller board.
     | |
047  | 2  Check seating of internal cables.
     | |
048  | 3  Replace controller board (procedure 4).
     | |
049  | 4  Replace power supply (procedure 5).
     |
050  N Y  Is there an Index Pulse Test error?
     | |
051  | 1  Reseat controller board.
     | |
052  | 2  Replace controller board (procedure 4).
     |
053  1  DIAG Flexible Disk Diagnostics executed OK.
```

---

(1) If a long master reset or power application is performed with a system flexible disk installed, internal diagnostics will autoload from disk instead of terminal. Therefore, flexible disk must be removed from drive unit(s), or Switch 2^3, or Switch 2^7 must be up in order to bypass test 7 or to bypass internal diagnostic execution, respectively.

```
     A B
     3 3
     | |
056  | 3  Replace controller board (procedure 4).
     | |
057  | 4  Replace power supply (procedure 5).
     |
058  N Y  Is there an Index Pulse Test error?
     | |
059  | 1  Reseat controller board.
     | |
060  | 2  Replace controller board (procedure 4).
     |
061  1  DIAG Flexible Disk Diagnostics executed OK.
```

---

(1) If a long master reset or power application is performed with a system flexible disk installed, internal diagnostics will autoload from disk instead of terminal. Therefore, flexible disk must be removed from drive unit(s), or Switch 2^3, or Switch 2^7 must be up in order to bypass test 7 or to bypass internal diagnostic execution, respectively.

PROCEDURES
SECTION 6B

Procedure 1 - Power Application/Removal

This procedure assumes that the flexible disk subsystem is plugged into the site ac outlet.

WARNING

Applying improper voltage to the flexible disk subsystem can damage components. Read label on back of unit for proper voltage and frequency.

NOTE

Correct operation of the IST parallel interface channel requires that power be applied to the last peripheral device on the channel. Last device supplies +5 V to the terminator.

1. First apply power to terminal. Then apply power to disk subsystem by pulling forward on Power On/Off switch connecting rod (early units) or by pressing Power ON/OFF switch to ON position (later units). See figure 6B-1.

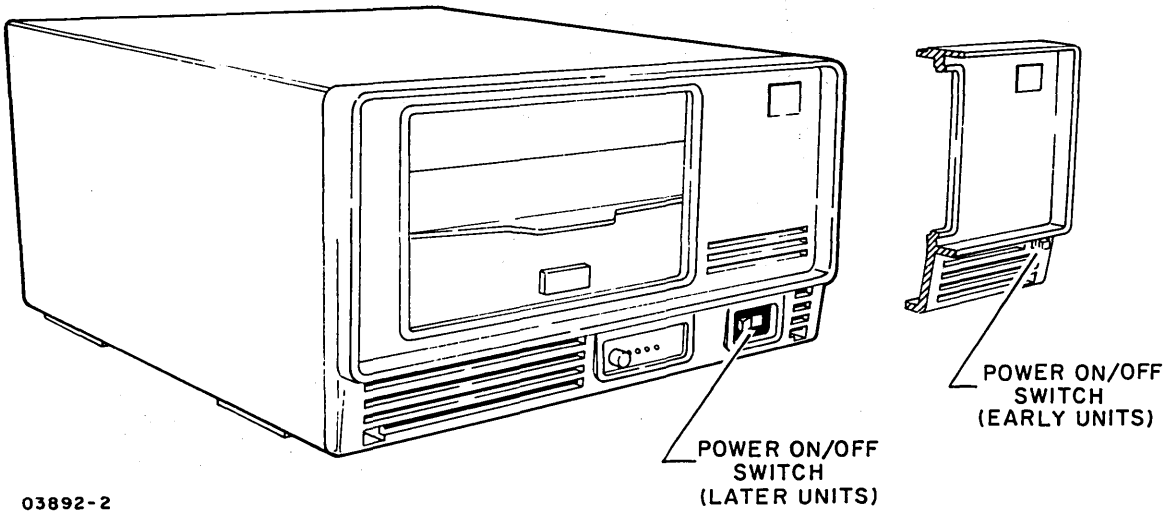

Figure 6B-1. Power On/Off Switch Location

2. Power on is indicated by LED 2^0 being lit (master units only).

3. Remove power by pushing Power On/Off switch connecting rod in (early units) or by pressing Power On/Off switch to Off position (later units).

Procedure 2 - Flexible Disk Installation/Removal

Install flexible disk in drive unit per the following:

1. Apply power to disk subsystem (procedure 1).

2. Press door latch to open access door (figure 6B-2).

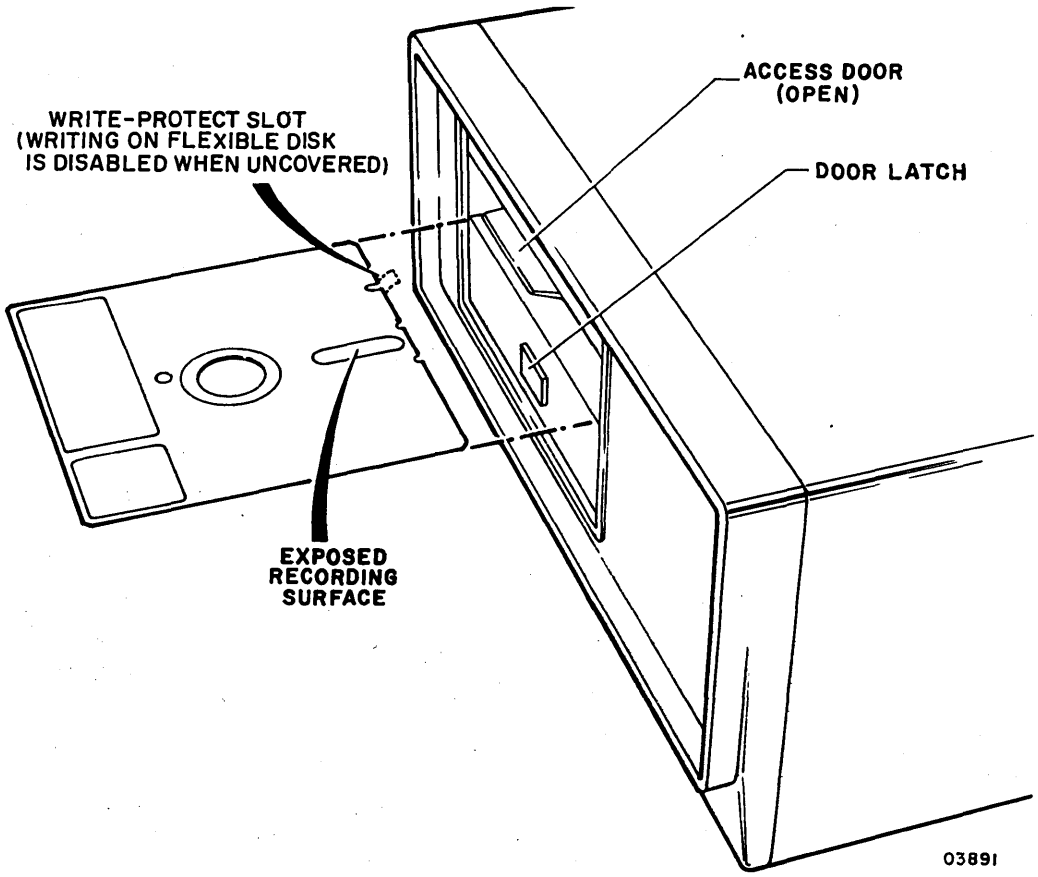

Figure 6B-2. Diskette Installation/Removal

3. Remove flexible disk from storage envelope.

NOTE

If information is to be written onto disk, Write-Protect slot must be covered with tape that is opaque to infrared light.

4. Hold flexible disk so that Write-Protect slot is to left and slide disk into drive unit until solidly seated.

5. Close drive access door by pressing down on door until latched.

6. To remove disk, press door latch to open door and remove disk from drive. Place flexible disk in storage envelope.

NOTE

Care should be taken in handling the flexible disks. Recommendations are:

- Do not use lead or grease pencils when writing on flexible disk jacket label as these items deposit flakes. Remove flexible disk before writing on jacket.
- Do not fasten paper clips to flexible disk jacket edges.
- Do not touch disk surface exposed by jacket slot.
- Do not attempt to clean disk surface in any manner.
- Keep flexible disk away from magnetic fields and ferromagnetic materials that may be magnetized.
- Protect flexible disk from liquids, dust, and metallic substances.
- Always place flexible disk in its protective jacket when not in use.
- Store flexible disks loosely in a vertical position, not stacked.

Procedure 3 - Front Panel and Cabinet Hood Removal/Replacement

To remove the front panel or cabinet hood, refer to figure 6B-3 and perform the following:

1. Turn subsystem power off (procedure 1).
2. To remove front panel, remove two screws from panel and tip bottom of panel forward to release.
3. To reinstall front panel, engage retaining slots at top of panel, then tip panel down and install mounting screws.
4. To remove cabinet hood, first remove front panel, then remove four screws from Nylon feet at bottom of unit and two screws at rear of unit.
5. When reinstalling cabinet hood, install two screws at rear of unit first before installing bottom screws and Nylon feet.

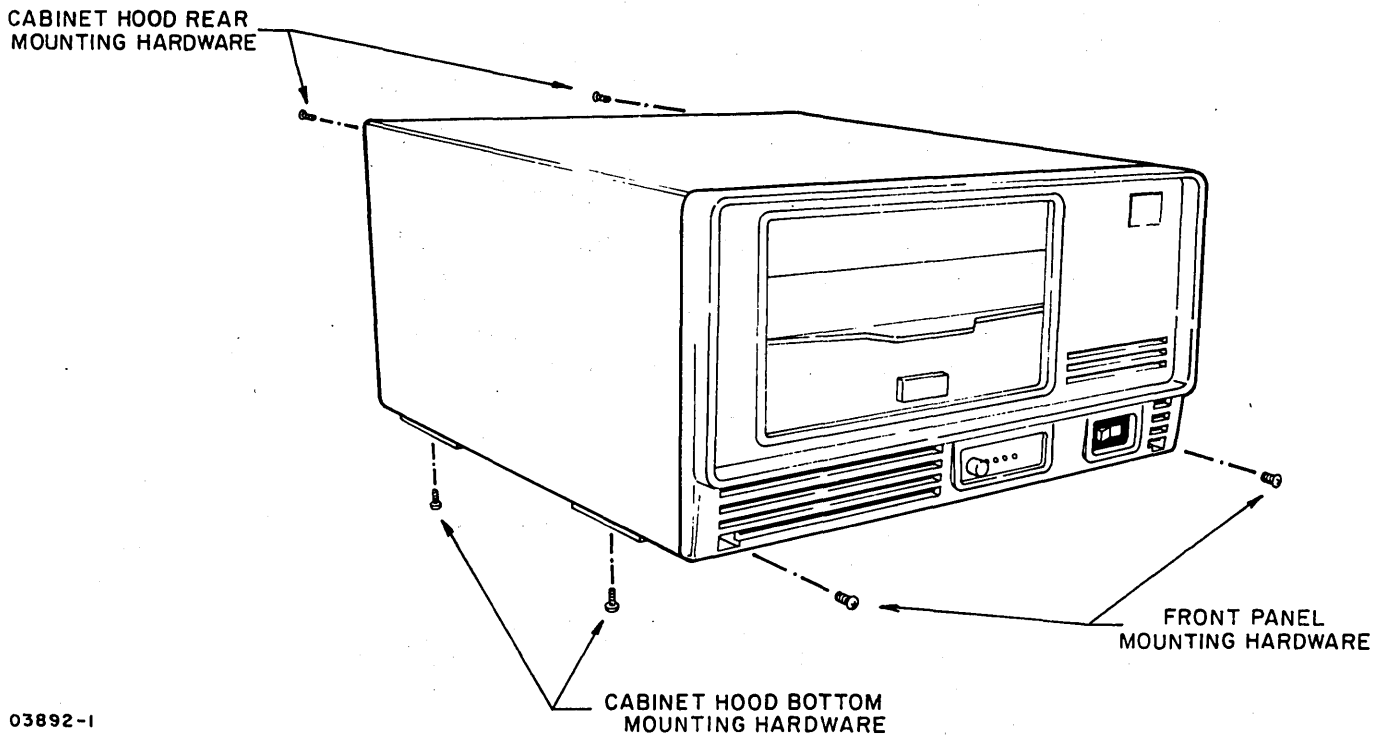

Figure 6B-3. Front Panel and Cabinet Hood Mounting Details

Procedure 4 - Controller Board Removal/Replacement

Perform the following steps to remove/replace the controller board and/or RAM, EROM, and Z80 chips. See figure 6B-4 for board layout.

1. Turn subsystem power off (procedure 1).

2. Remove front panel (procedure 3).

3. Release controller board extractors and slide pc board out of unit.

4. Remove master reset push button and install on replacement board. This button is eccentric which allows for some adjustment. This adjustment is performed in step 6 of this procedure.

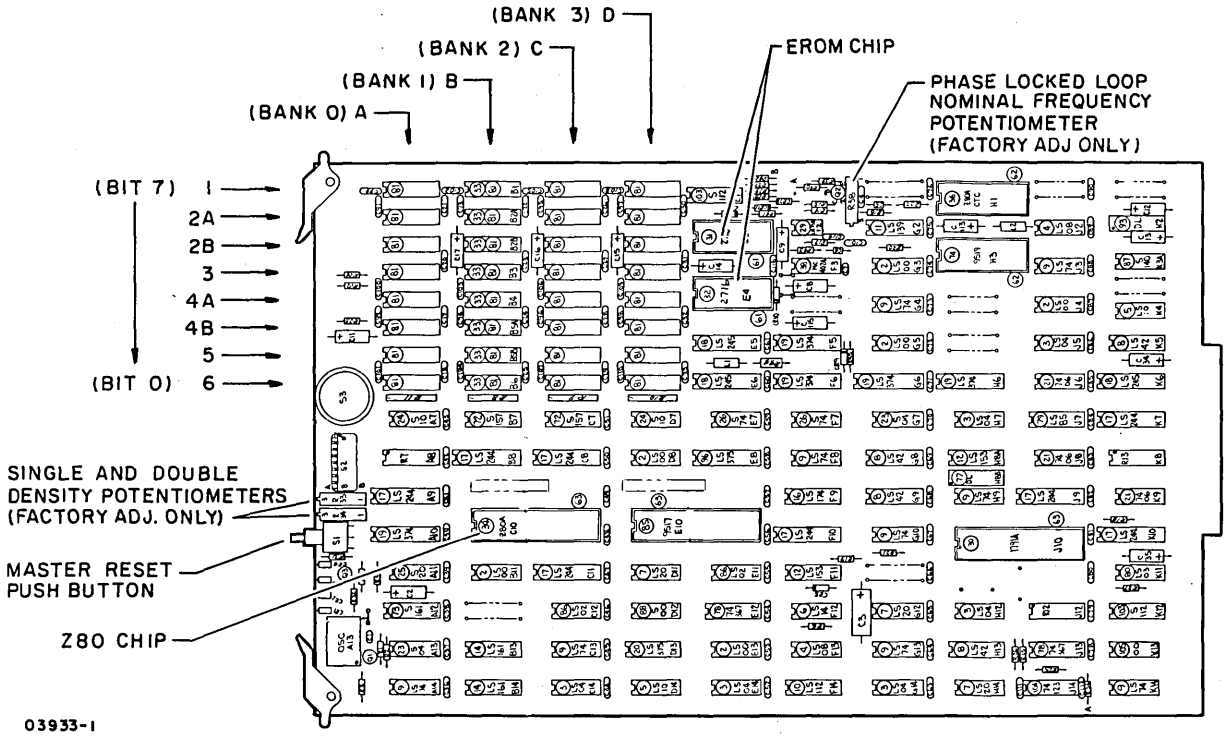

Figure 6B-4. Controller Board Layout

5. When installing a replacement controller board, verify that device address switch* and diagnostic control

---

*Normally set to address 7 if there is only one flexible disk unit connected on the parallel I/O channel.

switches are set correctly for subsystem operation (see section 3 for switch settings). If RAM options are installed on a controller board that is being replaced, transfer RAM chips to new controller board. Locations for RAM options are:

- 1st RAM option - locations C1, C2A, C2B, C3, C4A, C4B, C5, and C6.
- 2nd RAM option - locations D1, D2A, D2B, D3, D4A, D4B, D5, and D6.
- 3rd RAM option - locations A1, A2A, A2B, A3, A4A, A4B, A5, and A6.

6. Slide controller board in and replace front panel (procedure 3).

7. Rotate master reset push button unit until best fit is achieved.

Procedure 5 - Power Supply Removal/Replacement

This procedure describes removal/replacement of the power supply assembly. See figure 6B-5.

1. Turn subsystem power off (procedure 1).

2. Remove front panel (procedure 3).

3. Release power supply board extractors and slide assembly out of unit.

4. After installing a replacement power supply assembly, perform voltage adjustments as follows:

   - +5-V Adjustment

     a. Connect meter leads as follows:

        - Master units - Attach meter leads to +5-V and GND test points at left front edge of controller board.

        - Slave units - Remove disk drive unit from cabinet by pulling drive unit forward until free of slides. Set drive unit on its side, rotated to the left, to allow access to connector J4 at rear of drive PC board. Check that board connectors are seated firmly. Connect + meter lead to J4 pin 2 (+5 V) and - meter lead to J4 pin 3 (ground)

b. Apply power to unit.

c. Adjust top potentiometer on power supply board for +5 V ±0.1 V.

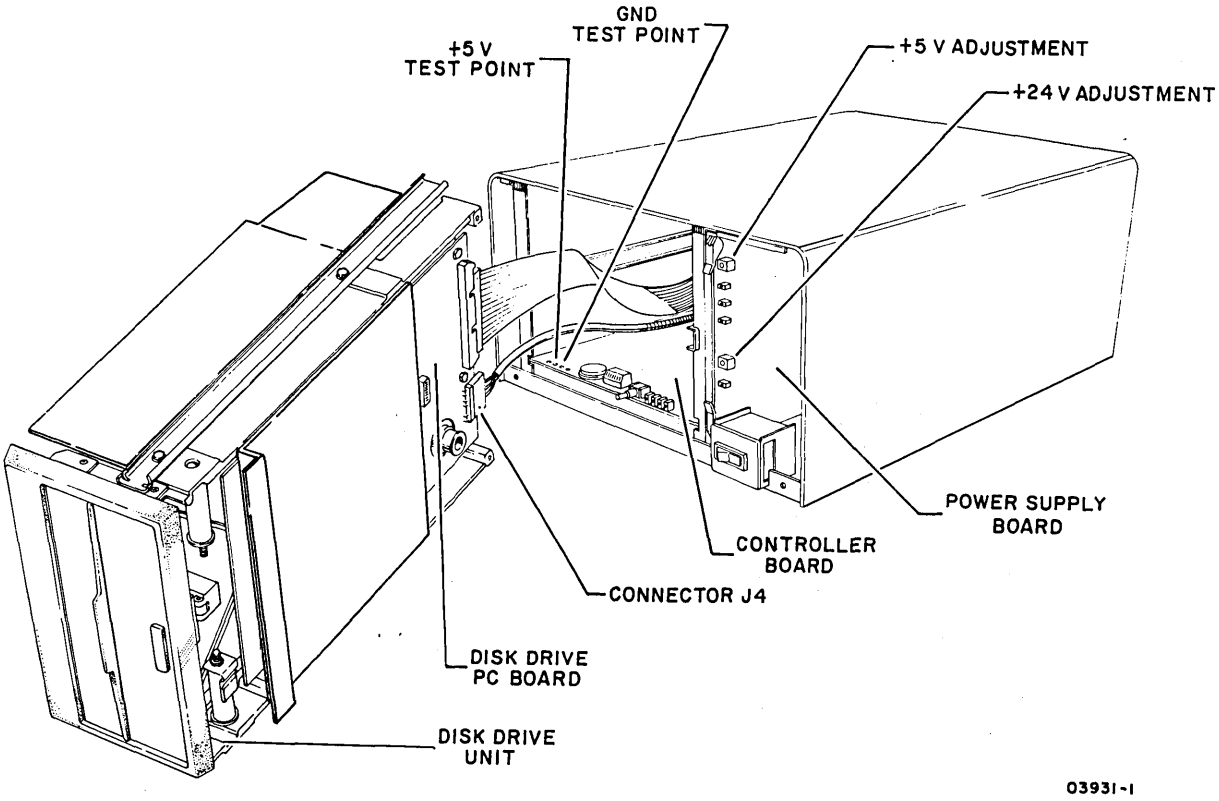

Figure 6B-5. Power Supply Voltage Adjustments

- +24-V Adjustment

  a. Turn power off.

  b. Remove disk drive unit from cabinet by pulling drive unit forward until free of slides but cables remain firmly attached. Set drive unit on its side, rotated 90° to the left, to allow access to connector J4 at rear of drive PC board.

  c. Connect + meter lead to J4 pin 4 (+24 V) and - lead to J4 pin 6 (+24-V return).

d. Apply power to unit.

e. Adjust bottom potentiometer on power supply board for +24 V ±0.5 V.

f. Turn power off, disconnect meter leads, and reinstall drive unit. Check that cables do not bind when installing drive unit.

Procedure 6 - Disk Drive Unit Removal/Replacement

Refer to figure 6B-6 and perform the following steps to remove/replace the disk drive unit.

1. Turn subsystem power off (procedure 1).

2. Remove front panel (procedure 3).

CAUTION

Do not set disk drive unit down with PC board at bottom. Damage to PC components may occur.

3. Remove disk drive unit from cabinet by pulling drive unit forward until free of slides. Set drive unit on its side and disconnect three cables from rear of unit.

4. Remove slides and shields (figure 6B-6) from existing drive unit. The shields are to be installed on the replacement drive as follows:

   - When replacement drive is a master unit (FA501-A,B PLATO Master Flexible Drive), both side and bottom shields must be replaced.

   - When using the slave unit as the replacement (BR801-A,B PLATO Slave Flexible Drive), only the side shield must be replaced (figure 6B-6).

5. Verify that drive pulley on replacement drive unit is installed correctly for 50-Hz/60-Hz operation as required. Pulley must be reversed to change the rotating speed of drive unit. Refer to figure 6B-7 for details.

6. Verify that Unit Select switch (DIP switches 1, 2, 3, and 4) and Ready switch (DIP switches 5, 6, 7, and 8) are set as follows:

   - Master Unit - DIP switch 1 and 5 ON, remaining switches OFF.

   - Slave Unit - DIP switch 2 and 6 ON, remaining switches OFF.

7. Remove cardboard head-protective flexible disk from drive unit if replacement unit is being installed.

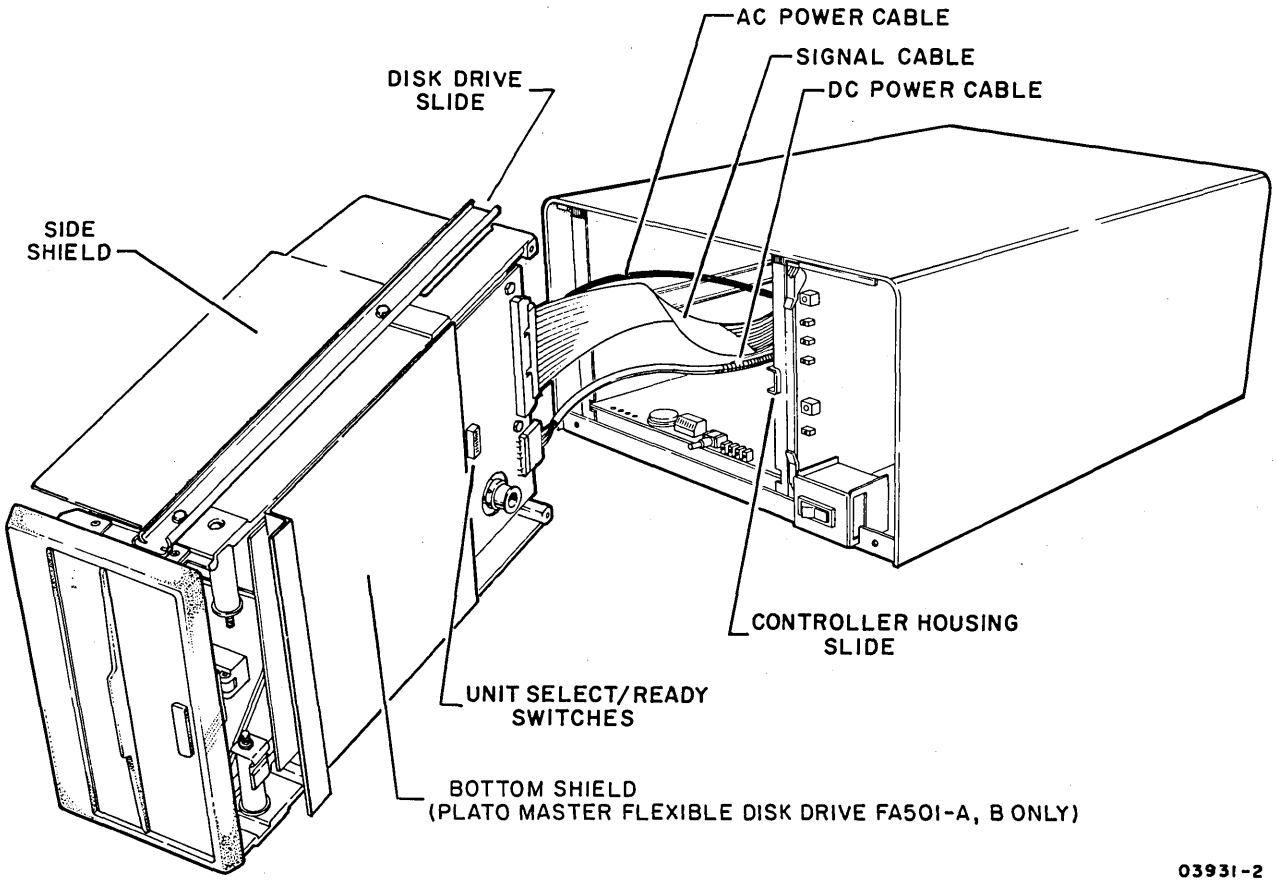

Figure 6B-6. Disk Drive Unit Installation

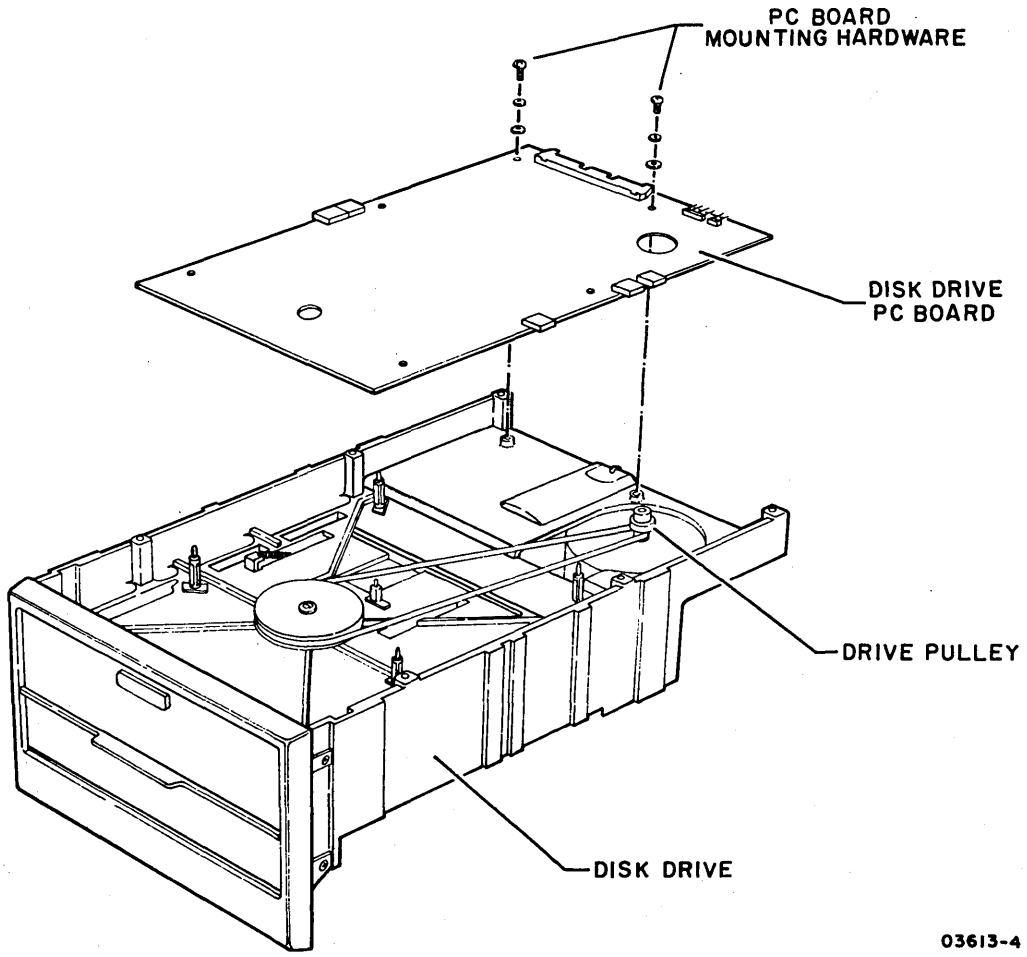

Note - Refer to the 9406 Flexible Disk Drive Assembly Hardware Maintenance manual for additional information if needed (see preface for publication number).

Figure 6B-7. Drive Pulley Details

This section contains the spare parts lists, genealogy charts, and assembly drawings for the flexible disk subsystem. Parts data for the 9406 Flexible Disk Drive unit is contained in a separate publication (see the preface for publication number).

NOTE

Parts list information is provided under separate dividers for the pre-production and production units. Common parts list information is also provided under a separate divider.

Table 7-1 explains the column headings on the asembly parts lists.

TABLE 7-1. EXPLANATION OF COLUMN HEADINGS ON ASSEMBLY PARTS LISTS

COLUMN HEADING	EXPLANATION
FIND NO.	Identifies an electrical or mechanical part on an assembly drawing. If more than one listing appears for a find number, refer to LI, WK IN, and WK OUT.
LI (Line Item)	Gives a chronological or historical record of the addition of a new part to a find number. For example, 01 indicates that the part was the first one used, and 02 indicates the second, etc. See also WK IN and WK OUT.
PART NUMBER	Gives the Control Data Corporation part identification. Use this number when ordering replacements.
CD (Check Digit)	Gives the information-control system a means of cross-checking the correctness of a part number.
QUANTITY	Lists the total number of a part required to complete an assembly. The vertical line near the center of the column acts as a decimal point. Numbers to the left of the line are whole numbers. Those to the right of the line are tenths, hundredths, and thousandths.
U/M (Unit of Measure)	Indicates how the information-control system counts or supplies a part.
PART DESCRIPTION	Describes the physical appearance, type, or name of a part.
MC (Material Code)	Supplies additional descriptive data to the information-control system.
YLD (Yield)	A 2-digit number that indicates the usable portion of any quantity of parts expressed as a percentage.
ECO NO. IN	Engineering Change Order that adds a new part to an assembly. See also WK IN.
ECO NO. OUT	Engineering Change Order that deletes a part from an assembly. See also WK OUT.
S/N (Serial Number)	Used to specify an ECO's effectivity by serial number.
WK IN (Week In)	Lists the date when manufacturing begins using a new part and when it is available for parts replacement. For example, 7222 means a part is available of the 22nd week of 1972.
WK OUT (Week Out)	Lists the date when manufacturing no longer uses a part in building an assembly. See also WK IN. Do not order a part after its week-out date.

0643-2A

PARTS DATA FOR PRE-PRODUCTION UNITS ONLY

DWN	R. Trautman	2/AC	CONTROL DATA	TITLE	PREFIX	DOCUMENT NO.	REV.
CHKD	R. Trautman	2-6-80		SPL PLATO FLEXIBLE DISK SUBSYSTEM	SPL	66308923	D
ENG	P. Wasmuth	2-6-80					
MFG	N/A			FIRST USED ON		SHEET	
APPR	G. M. Moe	2-16-80	CODE IDENT	FAS01A/B		1 OF 3	
	[illegible]	2-16-80	15920				

SHEET REVISION STATUS

REVISION RECORD

3	2	1	REV	ECO	DESCRIPTION	DRFT	DATE	APP
00	00	00	00	50004-62	RELEASED CLASS B		7/9/80	[illegible]
01	01	01	01	51009	ADDED F/N18 & NOTE 9	WBR	2/12/80	PRM
02	01	02	02	51011	F/N 18 WAS 66312007	WJG 2-14-80	2/14/80	PRM
03	03	03	03	51168	F/N 12 WAS 66139318 F/N 13 WAS 66139319	DS 7/17/80	7-18-80	PRM
A	A	A	A	11565-88	RELEASED CLASS "A"	/	7/23/80	[illegible]
B	A	B	B	14165	REVISED PER ECO	WJG 3/11/81	4/15/81	[illegible]
C	C	C	C	14376	REVISED PER ECO	EB	1/12/81	[illegible]
D	D	D	D	14571	CHG 1,5,19, DELETE NOTE 3	WJG 3-2-81	3-2-81	[illegible]

NOTES:

EQUIPMENT	EQUIPMENT CONFIGURATOR	TOP LEVEL ASSEMBLY
FAS01A 60HZ	15632205	15632209
FAS01B 50HZ	15632206	15632210

THIS SPL APPLIES ONLY TO A/801 EQUIPMENTS

DETACHED LISTS

AA3100 REV. 6/71 PRINTED IN U.S.A.

CONTROL DATA CORPORATION	CODE IDENT	SHEET		DOCUMENT NO.	REV.
	15920	2	SPL	66308923	D

NOTES:

1. These parts are the total required for a unit with no options installed.
2. A unit could have 3 RAM options of 8 RAM ICs for each option for a total of 32 RAM ICs in the unit.

4. Find Numbers 1 thru 7 and 19 are for the 9BED Controller Board.

5. Use Find Number 8 for the FAS01A (60HZ unit and use Find Number 9 for the FAS01B (50HZ unit).

6. Find Number 10 is for the 50HZ AC Entry only.

8. Find Number 11 is the signal cable used to connect the PLATO Flexible Disk Subsystem to the IST Terminal.

9. One of these devices is required on the last device on the Plato IST Parallel I/O channel daisy chain configuration.

AA3100 PRINTED IN U.S.A.

CONTROL DATA	CODE IDENT	SHEET		DOCUMENT NO.	REV.
	15920	3	SPL	66308923	D

FIND NO.	PART IDENTIFICATION	QUANTITY REQUIRED 60 HZ	50 HZ	UNIT OF MEAS	NOMENCLATURE OR DESCRIPTION	SPECIFICATIONS, NOTES, OR MATERIAL
1	66312070	1	1		2716 2KX8 ROM	4
2	15153821	8	8		4116 16K RAM	4
3	15163201	1	1		Z80 Processor	4
4	15163444	1	1		FD1791 Disk Controller	4
5	15163458	1	1		9517 DMA	4
6	15163459	1	1		9519 Interrupt Cont.	4
7	15164429	1	1		Z80A-CTC	4
8	15165425	1	0		60Hz Power Cord	5
9	15165426	0	1		50Hz Power Cord	5
10	52916789	0	1		Step down Transformer	6
11	61408865	1	1		25 Pin I/O Cable	8
12	95587103	1	1		Circuit Breaker	
13	15164356	1	1		Line Filter	
14	77618000	1	1		Flexible Disk Assembly	
15	90446284	1	1		98ED Controller Board	
16	90446140	1	1		98KD Power Supply	
17	90446143	1	1		98MD Backplane	
18	15632316	1	1		FT116A Terminator	7
19	66312071	1	1		2716 2KX8 Rom	

AA3101 REV. 5/71 PRINTED IN U.S.A.

DWN	R Trautman	2-80	CONTROL DATA	TITLE SPL PLATO SLAVE FLEXIBLE DISK	PREFIX SPL	DOCUMENT NO. 66308921	REV B
CHKD	R Trautman	2-6-80					
ENG	R Mechmann	2-6-80					
MFG	N/A			FIRST USED ON BR810A/B		SHEET 1 of 3	
APPR	E. M. Roe	7-16-80	CODE IDENT 15920				
	[illegible]	7-16-80					

SHEET REVISION STATUS

REVISION RECORD

3	2	1	REV	ECO	DESCRIPTION	DRFT	DATE	APP
00	00	00	00	50004[illegible]	Released Class B	/	2/7/80	[illegible]
01	00	01	01	51004	F/N 4 WAS 51897345	WJG 2-11-80		PRM 2-11-8
02	01	02	02	51114	F/N 4 WAS 51940854	WJG 6-6-80		PRM 6-6-80
03	03	03	03	~~51168~~	F/N 5 WAS 66309519 F/N 6 WAS 66309318	DS 7/17/80	7-18-80	PRM 7-18-8
A	A	A	A	11565-88	RELEASED CLASS "A"	/	7-23-80	[illegible]
B	A	B	B	14165	REVISED PER ECO	WJH 9/11/80	9-15-80	[illegible]

NOTES:

EQUIPMENT		EQUIPMENT CONFIGURATOR	TOP LEVEL ASSEMBLY
BR810A	60HZ	15632207	15632211
BR810B	50HZ	15632208	15632212

THIS SPL APPLIES ONLY TO A/801 EQUIPMENTS.

DETACHED LISTS

CONTROL DATA CORPORATION	CODE IDENT 15920	SHEET 2	SPL	DOCUMENT NO. 66308921	REV. A

NOTES:

1. These parts are the total required for a unit with no options installed
2. Use find number 1 {60HZ Power Cord} for the BR810A {60HZ unit} and find number 2 {50HZ Power Cord} for the BR810B {50HZ unit}.
3. Use find number 3 for the 50HZ AC Entry only.
4. Find number 4 is the Signal Cable used to connect the BR810A or BR810B to the FA501A or FA501B.

SERIES DATA		CODE IDENT	SHEET	SPL	DOCUMENT NO.	REV.
		15920	3		66308921	B

FIND NO.	PART IDENTIFICATION	QUANTITY REQUIRED 60 HZ	50 HZ	UNIT OF MEAS	NOMENCLATURE OR DESCRIPTION	SPECIFICATIONS, NOTES, OR MATERIAL
1	15165425	1	0		60Hz Power Cord	2
2	15165426	0	1		50Hz Power Cord	2
3	51918789	0	1		Step down Transformer	3
4	61408976	1	1		Slave Signal Cable	4
5	95587103	1	1		Circuit Breaker	
6	15164356	1	1		Line filter	
7	77618000	1	1		Flexible Disk Assembly	
8						
9	90446140	1	1		9BKD Power Supply	
10	90446143	1	1		9BMD Backplane	

62949100 B

SHEET REVISION STATUS	REVISION RECORD					
	REV	CO	DESCRIPTION	DRFT	DATE	CHKD	APP
	00	50004-12	RELEASED CLASS B	—	10/31/69	—	
	01	51118	DELETE 90446197	WJG	6-9-80	WJG	
	A	11565-88	RELEASED CLASS "A"	/	7-23-86		

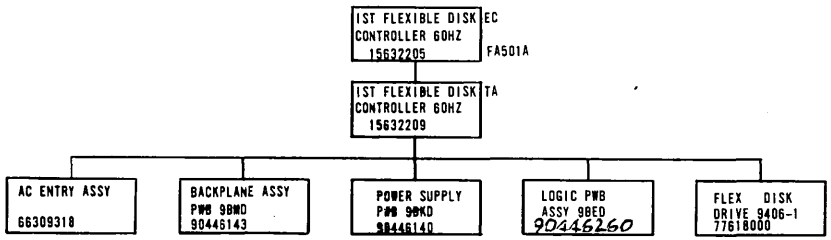

REFERENCE DOCUMENTS

ENGINEERING SPECIFICATION.....60422052

SPARE PARTS LIST.....66308923

SCHEMATIC DIAGRAM (98KD).....90446138

SCHEMATIC DIAGRAM (98MD).....90446141

SCHEMATIC DIAGRAM (98ED).....90446258

REFERENCE DRAWING							
			FIRST USED ON	FA501A			
			DWN	R Trautman	9-12-79		
			CHKD				
COMPONENTS, EXCEPT AS NOTED			ENGR		10/26/79		
	TOLERANCE	VALUE	RATING	MFG		7-10-80	
RES				APPR		7-15-80	
CAP							

TITLE
GENEALOGY CHART
PLATO MASTER FLEXIBLE DISK SUBSYSTEM 60 HZ

CODE IDENT 15920 | C | DRAWING NO 66310611

SCALE | CROSS REF NO | SHEET / OF /

SHEET REVISION STATUS	REVISION RECORD					
	REV	CO	DESCRIPTION	DRFT	DATE	CHKD	APP
	00	60004-12	RELEASED CLASS B		12/31/79		
	01	51118	DELETE 90446147	WJG	6-9-80	WJG	
	A	11565-88	RELEASED CLASS "A"		7-22-88		

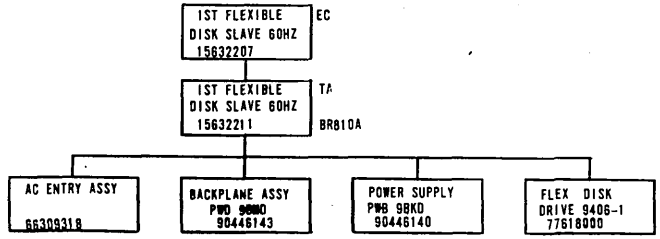

REFERENCE DOCUMENTS

ENGINEERING SPECIFICATION.....16342254
SPARE PARTS LIST.....66308921
SCHEMATIC DIAGRAM (9BKD).....90446138
SCHEMATIC DIAGRAM (9BMD).....90446141

REFERENCE DRAWING			
	FIRST USED ON	BR810A	
	DWN	R. Trautman	9-12-79
	CHKD		
	ENGR		11-26-79
	MFG		7-10-80
	APPR		7-15-80

COMPONENTS, EXCEPT AS NOTED	TOLERANCE	VALUE	RATING
RES			
CAP			

TITLE
GENEALOGY CHART
PLATO SLAVE FLEXIBLE DISK DRIVE 60HZ

CODE IDENT 15920 | C | DRAWING NO 66310612

SCALE | CROSS REF NO | SHEET 1 OF 1

62949100 B

SHEET REVISION STATUS	REVISION RECORD						
	REV	CO	DESCRIPTION	DRFT	DATE	CHKD	APP
	00	60004-12	RELEASED CLASS B	—	4/31/79	—	
	01	51118	DELETE 90446147	WJG	6-9-80	WJG	
	02	51172	SPL WAS 66308922	W.G	7-22-80	W.G	
	A	11565-88	RELEASED CLASS 'A'		7-2-90		

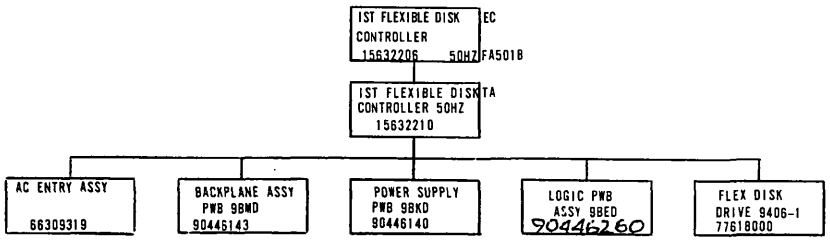

REFERENCE DOCUMENTS

ENGINEERING SPECIFICATION	16042854
SPARE PARTS LIST	66308923
SCHEMATIC DIAGRAM 9BKD	90446138
SCHEMATIC DIAGRAM 9BMD	90446141
SCHEMATIC DIAGRAM 9BED	90446258

REFERENCE DRAWING	CONTROL DATA			TITLE
	FIRST USED ON	FA501B		GENEALOGY CHART PLATO MASTER FLEXIBLE DISK SUBSYSTEM 50 HZ
	DWN	R Trautman	9-12-79	
	CHKD			
COMPONENTS, EXCEPT AS NOTED	ENGR		10/26/79	CODE IDENT 15920 / C / DRAWING NO 66310613
TOLERANCE / VALUE / RATING	MFG		7-10-80	
RES	APPR		7-15-80	SCALE / CROSS REF NO / SHEET 1 OF 1
CAP				

SHEET REVISION STATUS							

REVISION RECORD						
REV	CO	DESCRIPTION	DRFT	DATE	CHKD	APP
00	60004-12	RELEASED CLASS B	/	[illegible]	/	[illegible]
01	51118	DELETE 90446147	WJG	6-9-80	[illegible]	
02	51172	SPL WAS 66308920	WJG	7-22-80	[illegible]	
A	11565-28	RELEASED CLASS A	/	[illegible]		

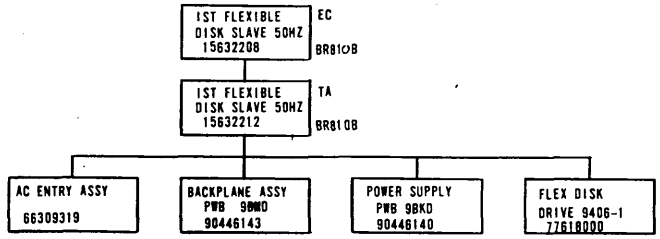

REFERENCE DOCUMENTS

ENGINEERING SPECIFICATION	16042854
SPARE PARTS LIST	66308921
SCHEMATIC DIAGRAM (98KD)	90446138
SCHEMATIC DIAGRAM (98MD)	90446141

REFERENCE DRAWING			
COMPONENTS, EXCEPT AS NOTED			
	TOLERANCE	VALUE	RATING
RES			
CAP			

CONTROL		
FIRST USED ON	BR810B	
DWN	R Trautman	9-12-79
CHKD		
ENGR	[illegible]	10/2/79
MFG	[illegible]	7-10-80
APPR	[illegible]	7-15-80

TITLE
GENEALOGY CHART
PLATO SLAVE FLEXIBLE DISK DRIVE 50HZ

CODE IDENT		DRAWING NO
15920	C	66310614

SCALE / CROSS REF NO / SHEET / OF /

15632209	CONTROLLER	60 HZ
15632210	CONTROLLER	50 HZ
15632211	SLAVE	60 HZ
15632212	SLAVE	50 HZ

SHEET REVISION STATUS

REVISION RECORD

Z	/	REV	ECO	DESCRIPTION	DFT	DATE	CHKD	APP
00	00	00	5000 A/C	RELEASED CLASS B	—	11/1/79		
01	01	01	50952	REVISED PER ECO	WJG	1-17-80	WJG	
02	02	02	50988	P/N 33 WAS 91522017	WJG	2/1/80	WJG	
03	03	03	51028	CHANGE TITLE	WJG	3-3-80	WJG	
04	04	04	51128	ADD P/N'S 34, 35, 36	DS	6/19/80		
A	A	A	11545-85	RELEASED CLASS A	—	7/16/80	—	
B	B	B	14165	INACTIVE SERVICE USE ONLY SUPERSEDED BY 15632578	NJH	7/11/86	WJG	

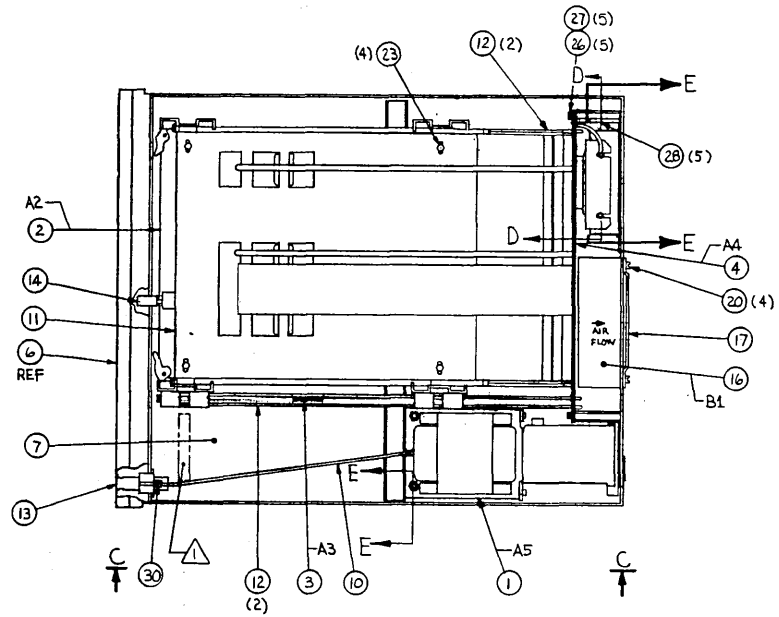

(TOP VIEW SHOWN WITH ITEMS 5, 8, 9, & 18 REMOVED)

NOTES:

1. MARK "ASSY 156322XX" IN AREA SHOWN PER CDC SPEC 1012150B.
2. CONNECT SUBASSEMBLIES AS FOLLOWS:
   PLUG A4P1 INTO A1J9
   PLUG A4P2 INTO A1J4
   PLUG A4P3 INTO A1J1
   PLUG A4P4 INTO B1J1
   PLUG A5P1 INTO A4J3

INACTIVE

METRIC

APL 15632209 THRU 15632212

DETACHED LISTS

UNLESS OTHERWISE SPECIFIED DIMENSIONS ARE IN MM

TOLERANCES: 3 PLACE ±/ 2 PLACE ±/ ANGLES ±/

DO NOT SCALE DRAWING

MATERIAL

FINISH

FA501

DRAWN BY 10-5-79

CHECKED BY 10-5-79

ENGINEER

MFG 12-5-80

APPROVED 7-2-80

TITLE: PLATO FLEXIBLE DISK (TLA)

CODE IDENT 15920

D

DRAWING NO 15632209 THRU 15632212

SCALE 1/2

SHEET 1 OF 2

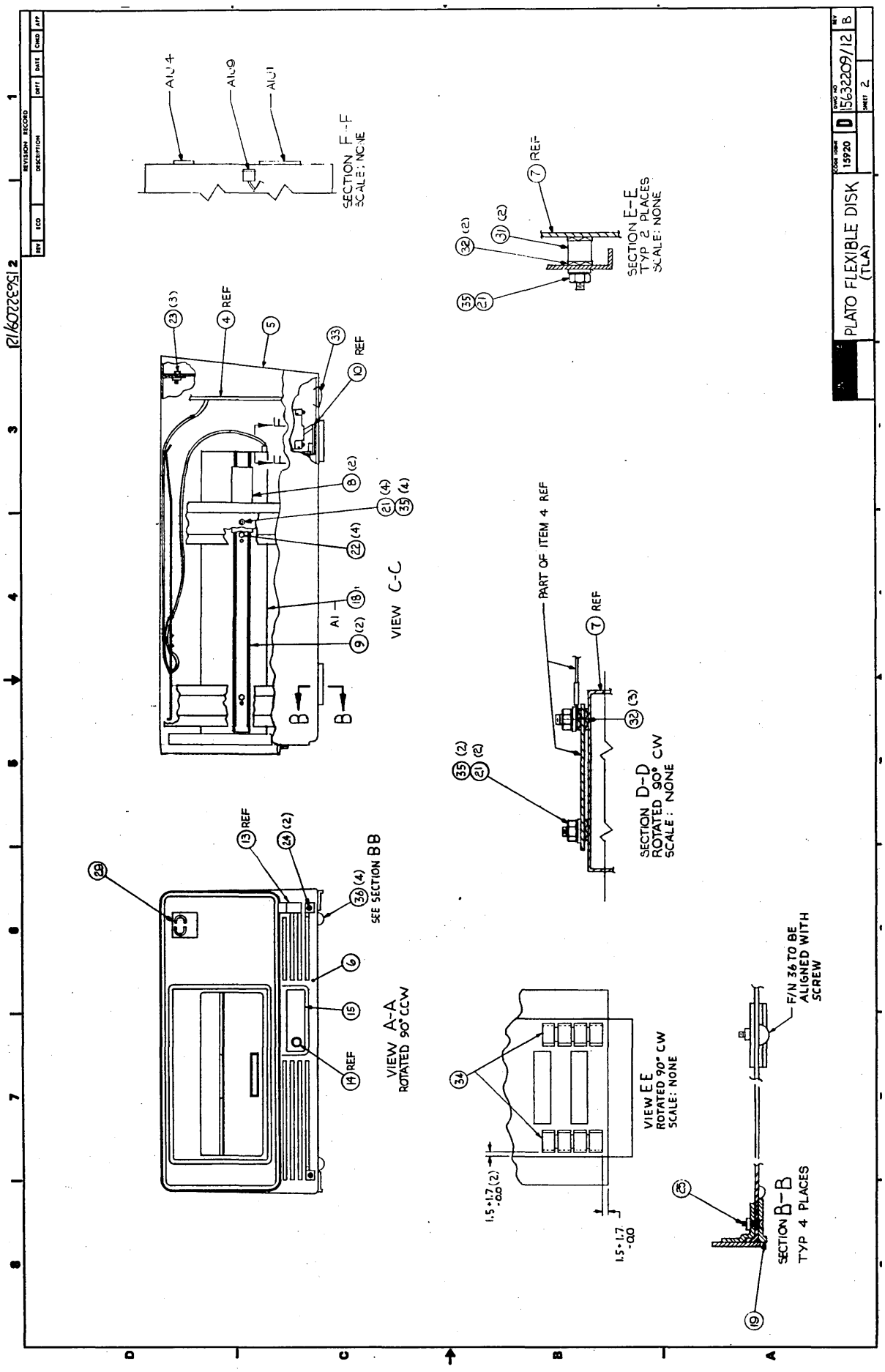
PLATO FLEXIBLE DISK
(TLA)
15632209/12
B
SHEET 2
SECTION F-F
SCALE: NONE
SECTION E-E
TYP 2 PLACES
SCALE: NONE
VIEW C-C
SECTION D-D
ROTATED 90° CW
SCALE: NONE
PART OF ITEM 4 REF
VIEW A-A
ROTATED 90° CCW
SEE SECTION BB
VIEW E E
ROTATED 90° CW
SCALE: NONE
F/N 36 TO BE
ALIGNED WITH
SCREW
SECTION B-B
TYP 4 PLACES

BUILD ARC 440

ASSEMBLY PARTS LIST

PRINT DATE	PAGE	FILE CHANGE NO.
09-04-80	1	00014165

DIV.	ASSEMBLY NUMBER	CD	REV.	DWG.	DESCRIPTION	MC	STATUS	STATUS DATE	ENG. RESP.	FILE DATE
0860	15632209	1	B	D	REPLACED BY 15632572 14165	G	INA	09-04-80	FA501A	09-04-80

T	FIND NO	LI	PART NUMBER	CD	M	QUANTITY		U/M	PART DESCRIPTION	MC	YLD	ECO. NO. IN	ECO. NO. OUT	S/N	WK IN	WK OUT
	001	01	66309318	5		1		PC	REPLACED BY 61409021 14165	A						
	002	01	90446124	1		1		PC	CD ASSY 9BED DISK CONTR	S						
	003	01	90446140	7		1		PC	CD ASSY 9BKD PWR SPLY	A						
	004	01	90446143	1		1		PC	CD ASSY 9BMD BACKPLANE	A						
	005	01	71493032	8		1		PC	COVER METAL AL	P						
	006	01	71493037	7		1		PC	FACE PLATE (SM) PAINTED	P						
	007	01	71493050	0		1		PC	BASE METAL CRS	P						
	008	01	71492950	2		2		PC	TRACK DISK MTG	P						
	009	01	71492951	0		2		PC	SLIDE DISK MTG	P						
	010	01	71492954	4		1		PC	ROD ACTUATOR	P						
	011	01	71492955	1		1		PC	PANEL CABLE SUPPORT	P						
	012	01	71492966	8		4		PC	GUIDE CARD	P						
	013	01	71493189	6		1		PC	BUTTON, HINGED #PLATIC-BLK)	P						
	014	01	71492968	4		1		PC	BUTTON SWITCH	P						
	015	01	71493053	4		1		PC	PANEL SWITCH/INDICATOR	P						
	016	01	51886600	9		1		PC	FAN, 50CFM 115V 50/60HZ 1PH	P						
	017	01	94375401	0		1		PC	GUARD, FAN 50/60HZ	P						
	018	01	77618000	2		1		PC	FLOPPY DISK ASSY	V						
	019	01	71493064	1		4		PC	FOOT	P						
	020	01	91976649	3		4		PC	MSCR PAN PHL M4X40MM	B						
	021	01	91975724	5		8		PC	NUT HEXAGON SZ 5MM	B						

BUILD ARC 440

ASSEMBLY PARTS LIST

PRINT DATE	PAGE	FILE CHANGE NO.
09-04-80	2	00014165

DIV.	ASSEMBLY NUMBER	CD	REV.	DWG.	DESCRIPTION	MC	STATUS	STATUS DATE	ENG. RESP.	FILE DATE
0860	15632209	1	B	D	REPLACED BY 15632572 14165	G	INA	09-04-80	FA501A	09-04-80

T	FIND NO	LI	PART NUMBER	CD	M	QUANTITY		U/M	PART DESCRIPTION	MC	YLD	ECO. NO. IN	ECO. NO. OUT	S/N	WK IN	WK OUT
	022	01	15164911	8		4		PC	MSCR HEX-LK PLN M4X8MM STL ZP	B						
	023	01	15164917	5		7		PC	MSCR HEX-LK PLN M5X8MM STL Z	B						
	024	01	91976758	2		2		PC	MSCR PNH M5X10MM	B						
	025	01	91976864	8		4		PC	MSCR MACH FLH M5X10MM	B						
	026	01	91976652	7		5		PC	MSCR PAN PHL M5X10MM	B						
	027	01	91975706	2		5		PC	WASHER LK METRIC M5	B						
	028	01	71493078	1		5		PC	STANDOFF HEX METRIC CRS	B						
	029	01	51918435	2		1		PC	EMBLEM, CDC ID	P						
	030	01	51918188	7		1		PC	SPG, COMP	P						
	031	01	93109381	9		2		PC	STOFF,NO.1/4 .250L RD ZINC	B						
	032	01	91975684	1		7		PC	WSHR METRIC SZ 5 SCREW	B						
	033	01	93522018	6		1		PC	PLUG,SNAP BUTTON 1 1/4 DIA HO	P						
	034	01	94374900	2			125	PC	STRIP CONTACT	P						
	035	01	09040204	1		8		PC	WSHR, NO.10 DISHED LOCK STL	B						
	036	01	51805700	5		4		PC	BUMPER SELF STICKING	P						
									0036 TOTAL LINES							

BUILD ARC 440

ASSEMBLY PARTS LIST

PRINT DATE	PAGE	FILE CHANGE NO.
09-08-80	1	00014165

DIV.	ASSEMBLY NUMBER	CD	REV.	DWG.	DESCRIPTION	MC	STATUS	STATUS DATE	ENG. RESP.	FILE DATE
0860	15632210	9	B	D	REPLACED BY 15632573 14165	G	INA	09-04-80	FA501B	09-08-80

T	FIND NO	LI	PART NUMBER	CD	M	QUANTITY	U/M	PART DESCRIPTION	MC	YLD	ECO. NO. IN	ECO. NO. OUT	S/N	WK IN	WK OUT
	001	01	66309319	3		1	PC	REPLACED BY 61409022 14165	A						
	002	01	90446124	1		1	PC	CD ASSY 9BED DISK CONTR	S						
	003	01	90446140	7		1	PC	CD ASSY 9BKD PWR SPLY	A						
	004	01	90446143	1		1	PC	CD ASSY 9BMD BACKPLANE	A						
	005	01	71493032	8		1	PC	COVER METAL AL	P						
	006	01	71493037	7		1	PC	FACE PLATE (SM) PAINTED	P						
	007	01	71493050	0		1	PC	BASE METAL CRS	P						
	008	01	71492950	2		2	PC	TRACK DISK MTG	P						
	009	01	71492951	0		2	PC	SLIDE DISK MTG	P						
	010	01	71492954	4		1	PC	ROD ACTUATOR	P						
	011	01	71492955	1		1	PC	PANEL CABLE SUPPORT	P						
	012	01	71492966	8		4	PC	GUIDE CARD	P						
	013	01	71493189	6		1	PC	BUTTON, HINGED #PLATIC-BLK)	P						
	014	01	71492968	4		1	PC	BUTTON SWITCH	P						
	015	01	71493053	4		1	PC	PANEL SWITCH/INDICATOR	P						
	016	01	51886600	9		1	PC	FAN, 50CFM 115V 50/60HZ 1PH	P						
	017	01	94375401	0		1	PC	GUARD, FAN 50/60HZ	P						
	018	01	77618000	2		1	PC	FLOPPY DISK ASSY	V						
	019	01	71493064	1		4	PC	FOOT	P						
	020	01	91976649	3		4	PC	MSCR PAN PHL M4X40MM	B						
	021	01	91975724	5		8	PC	NUT HEXAGON SZ 5MM	B						

BUILD ARC 440

ASSEMBLY PARTS LIST

PRINT DATE	PAGE	FILE CHANGE NO.
09-08-80	2	00014165

DIV.	ASSEMBLY NUMBER	CD	REV.	DWG.	DESCRIPTION	MC	STATUS	STATUS DATE	ENG. RESP.	FILE DATE
0860	15632210	9	B	D	REPLACED BY 15632573 14165	G	INA	09-04-80	FA501B	09-08-80

T	FIND NO	LI	PART NUMBER	CD	M	QUANTITY	U/M	PART DESCRIPTION	MC	YLD	ECO. NO. IN	ECO. NO. OUT	S/N	WK IN	WK OUT
	022	01	15164911	8		4	PC	MSCR HEX-LK PLN M4X8MM STL ZP	B						
	023	01	15164917	5		7	PC	MSCR HEX-LK PLN M5X8MM STL Z	B						
	024	01	91976758	2		2	PC	MSCR PNH M5X10MM	B						
	025	01	91976864	8		4	PC	MSCR MACH FLH M5X10MM	B						
	026	01	91976652	7		5	PC	MSCR PAN PHL M5X10MM	B						
	027	01	91975706	2		5	PC	WASHER LK METRIC M5	B						
	028	01	71493078	1		5	PC	STANDOFF HEX METRIC CRS	B						
	029	01	51918435	2		1	PC	EMBLEM, CDC ID	P						
	030	01	51918188	7		1	PC	SPG, COMP	P						
	031	01	93109381	9		2	PC	STOFF,NO.1/4 .250L RD ZINC	B						
	032	01	91975684	1		7	PC	WSHR METRIC SZ 5 SCREW	B						
	033	01	93522018	6		1	PC	PLUG,SNAP BUTTON 1 1/4 DIA HO	P						
	034	01	94374900	2		125	PC	STRIP CONTACT	P						
	035	01	09040204	1		8	PC	WSHR, NO.10 DISHED LOCK STL	B						
	036	01	51805700	5		4	PC	BUMPER SELF STICKING	P						
								0036 TOTAL LINES							

BUILD ARC 440

ASSEMBLY PARTS LIST

PRINT DATE	PAGE	FILE CHANGE NO.
09-08-80	1	00014165

DIV.	ASSEMBLY NUMBER	CD	REV.	DWG.	DESCRIPTION	MC	STATUS	STATUS DATE	ENG. RESP.	FILE DATE
0860	15632211	7	B	D	REPLACED BY 15632574 14165	G	INA	09-04-80	BR810A	09-08-80

T	FIND NO	LI	PART NUMBER	CD	M	QUANTITY		U/M	PART DESCRIPTION	MC	YLD	ECO. NO. IN	ECO. NO. OUT	S/N	WK IN	WK OUT
	001	01	66309318	5		1		PC	REPLACED BY 61409021 14165	A						
	003	01	90446140	7		1		PC	CD ASSY 9BKD PWR SPLY	A						
	004	01	90446143	1		1		PC	CD ASSY 9BMD BACKPLANE	A						
	005	01	71493032	8		1		PC	COVER METAL AL	P						
	006	01	71493037	7		1		PC	FACE PLATE (SM) PAINTED	P						
	007	01	71493050	0		1		PC	BASE METAL CRS	P						
	008	01	71492950	2		2		PC	TRACK DISK MTG	P						
	009	01	71492951	0		2		PC	SLIDE DISK MTG	P						
	010	01	71492954	4		1		PC	ROD ACTUATOR	P						
	011	01	71492955	1		1		PC	PANEL CABLE SUPPORT	P						
	012	01	71492966	8		2		PC	GUIDE CARD	P						
	013	01	71493189	6		1		PC	BUTTON, HINGED #PLATIC-BLK)	P						
	014	01	71492968	4		1		PC	BUTTON SWITCH	P						
	015	01	71493054	2		1		PC	PANEL SWITCH INDICATOR	P						
	016	01	51886600	9		1		PC	FAN, 50CFM 115V 50/60HZ 1PH	P						
	017	01	94375401	0		1		PC	GUARD, FAN 50/60HZ	P						
	018	01	77618000	2		1		PC	FLOPPY DISK ASSY	V						
	019	01	71493064	1		4		PC	FOOT	P						
	020	01	91976649	3		4		PC	MSCR PAN PHL M4X40MM	B						
	021	01	91975724	5		8		PC	NUT HEXAGON SZ 5MM	B						
	022	01	15164911	8		4		PC	MSCR HEX-LK PLN M4X8MM STL ZP	B						

BUILD ARC 440

ASSEMBLY PARTS LIST

PRINT DATE	PAGE	FILE CHANGE NO.
09-08-80	2	00014165

DIV.	ASSEMBLY NUMBER	CD	REV.	DWG.	DESCRIPTION	MC	STATUS	STATUS DATE	ENG. RESP.	FILE DATE
0860	15632211	7	B	D	REPLACED BY 15632574 14165	G	INA	09-04-80	BR810A	09-08-80

T	FIND NO	LI	PART NUMBER	CD	M	QUANTITY		U/M	PART DESCRIPTION	MC	YLD	ECO. NO. IN	ECO. NO. OUT	S/N	WK IN	WK OUT
	023	01	15164917	5		7		PC	MSCR HEX-LK PLN M5X8MM STL Z	B						
	024	01	91976758	2		2		PC	MSCR PNH M5X10MM	B						
	025	01	91976864	8		4		PC	MSCR MACH FLH M5X10MM	B						
	026	01	91976652	7		5		PC	MSCR PAN PHL M5X10MM	B						
	027	01	91975706	2		5		PC	WASHER LK METRIC M5	B						
	028	01	71493078	1		4		PC	STANDOFF HEX METRIC CRS	B						
	029	01	51918435	2		1		PC	EMBLEM, CDC ID	P						
	030	01	51918188	7		1		PC	SPG, COMP	P						
	031	01	93109381	9		2		PC	STOFF,NO.1/4 .250L RD ZINC	B						
	032	01	91975684	1		7		PC	WSHR METRIC SZ 5 SCREW	B						
	033	01	93522018	6		1		PC	PLUG,SNAP BUTTON 1 1/4 DIA HO	P						
	034	01	94374900	2			125	PC	STRIP CONTACT	P						
	035	01	09040204	1		8		PC	WSHR, NO.10 DISHED LOCK STL	B						
	036	01	51805700	5		4		PC	BUMPER SELF STICKING	P						
									0035 TOTAL LINES							

BUILD ARC 440

ASSEMBLY PARTS LIST

PRINT DATE	PAGE	FILE CHANGE NO.
09-08-80	1	00014165

DIV.	ASSEMBLY NUMBER	CD	REV.	DWG.	DESCRIPTION	MC	STATUS	STATUS DATE	ENG. RESP.	FILE DATE
0860	15632212	5	B	D	REPLACED BY 15632575 14165	G	INA	09-04-80	BR810B	09-08-80

T	FIND NO	LI	PART NUMBER	CD	M	QUANTITY		U/M	PART DESCRIPTION	MC	YLD	ECO. NO. IN	ECO. NO. OUT	S/N	WK IN	WK OUT
	001	01	66309319	3		1		PC	REPLACED BY 61409022 14165	A						
	003	01	90446140	7		1		PC	CD ASSY 9BKD PWR SPLY	A						
	004	01	90446143	1		1		PC	CD ASSY 9BMD BACKPLANE	A						
	005	01	71493032	8		1		PC	COVER METAL AL	P						
	006	01	71493037	7		1		PC	FACE PLATE (SM) PAINTED	P						
	007	01	71493050	0		1		PC	BASE METAL CRS	P						
	008	01	71492950	2		2		PC	TRACK DISK MTG	P						
	009	01	71492951	0		2		PC	SLIDE DISK MTG	P						
	010	01	71492954	4		1		PC	ROD ACTUATOR	P						
	011	01	71492955	1		1		PC	PANEL CABLE SUPPORT	P						
	012	01	71492966	8		2		PC	GUIDE CARD	P						
	013	01	71493189	6		1		PC	BUTTON, HINGED #PLATIC-BLK)	P						
	014	01	71492968	4		1		PC	BUTTON SWITCH	P						
	015	01	71493054	2		1		PC	PANEL SWITCH INDICATOR	P						
	016	01	51886600	9		1		PC	FAN, 50CFM 115V 50/60HZ 1PH	P						
	017	01	94375401	0		1		PC	GUARD, FAN 50/60HZ	P						
	018	01	77618000	2		1		PC	FLOPPY DISK ASSY	V						
	019	01	71493064	1		4		PC	FOOT	P						
	020	01	91976649	3		4		PC	MSCR PAN PHL M4X40MM	B						
	021	01	91975724	5		8		PC	NUT HEXAGON SZ 5MM	B						
	022	01	15164911	8		4		PC	MSCR HEX-LK PLN M4X8MM STL ZP	B						

BUILD ARC 440

ASSEMBLY PARTS LIST

PRINT DATE	PAGE	FILE CHANGE NO.
09-08-80	2	00014165

DIV.	ASSEMBLY NUMBER	CD	REV.	DWG.	DESCRIPTION	MC	STATUS	STATUS DATE	ENG. RESP.	FILE DATE
0860	15632212	5	B	D	REPLACED BY 15632575 14165	G	INA	09-04-80	BR810B	09-08-80

T	FIND NO	LI	PART NUMBER	CD	M	QUANTITY		U/M	PART DESCRIPTION	MC	YLD	ECO. NO. IN	ECO. NO. OUT	S/N	WK IN	WK OUT
	023	01	15164917	5		7		PC	MSCR HEX-LK PLN M5X8MM STL Z	B						
	024	01	91976758	2		2		PC	MSCR PNH M5X10MM	B						
	025	01	91976864	8		4		PC	MSCR MACH FLH M5X10MM	B						
	026	01	91976652	7		5		PC	MSCR PAN PHL M5X10MM	B						
	027	01	91975706	2		5		PC	WASHER LK METRIC M5	B						
	028	01	71493078	1		5		PC	STANDOFF HEX METRIC CRS	B						
	029	01	51918435	2		1		PC	EMBLEM, CDC ID	P						
	030	01	51918188	7		1		PC	SPG, COMP	P						
	031	01	93109381	9		2		PC	STOFF,NO.1/4 .250L RD ZINC	B						
	032	01	91975684	1		7		PC	WSHR METRIC SZ 5 SCREW	B						
	033	01	93522018	6		1		PC	PLUG,SNAP BUTTON 1 1/4 DIA HO	P						
	034	01	94374900	2			125	PC	STRIP CONTACT	P						
	035	01	09040204	1		8		PC	WSHR, NO.10 DISHED LOCK STL	B						
	036	01	51805700	5		4		PC	BUMPER SELF STICKING	P						
									0035 TOTAL LINES							

66309318	60 HZ
66309319	50 HZ

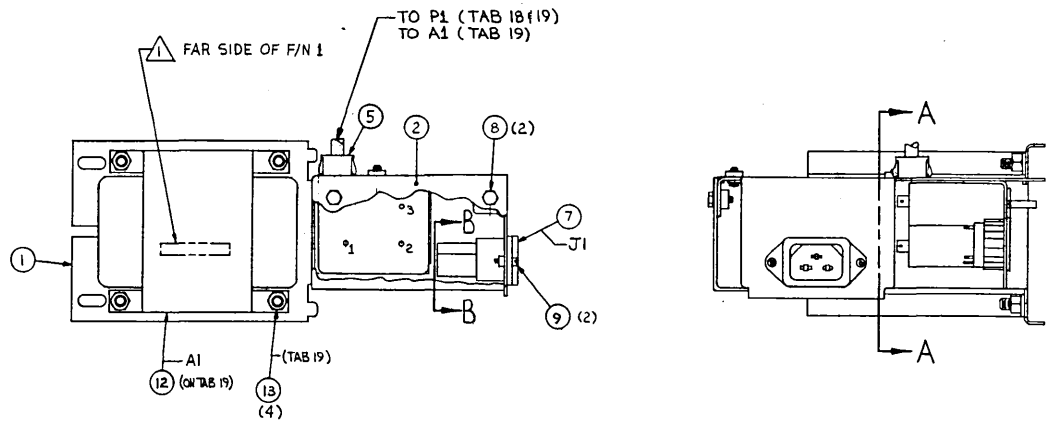

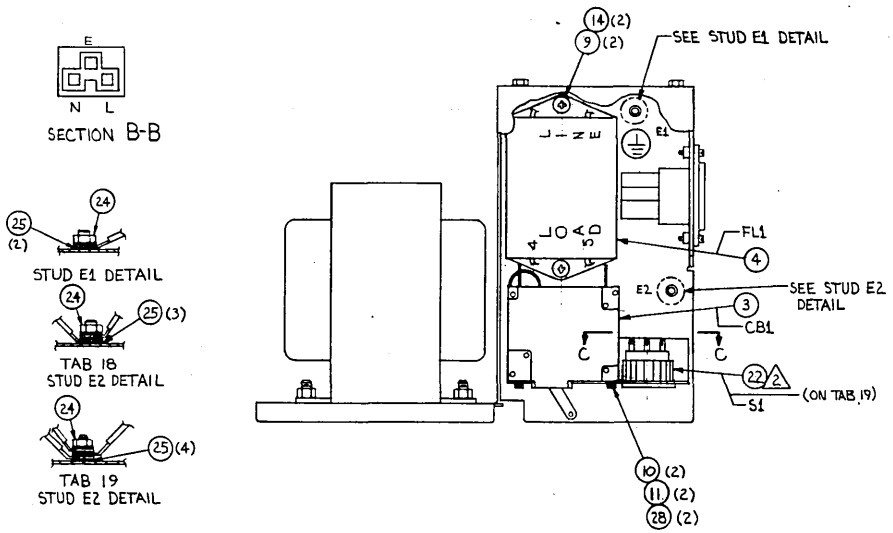

NOTES:

1. MARK "ASSY 66309318X" IN AREA SHOWN PER CDC SPEC 10121508.
2. SECURE PLASTIC NUT USING F/N 23.

INACTIVE

METRIC

SHEET REVISION STATUS	REV	ECO	DESCRIPTION	DRFT	DATE	CHKD	APP
	00	6004-12	RELEASED CLASS 2				
	01	50921	F/N 4 WAS 90744775	WJG	12-2-79	WJG	
	02	50952	DG F/N 9, ADD F/N'S 14-21, 24-26	WJG	1-16-80	WJG	
	03	50971	TAB F/N 3 WAS 5688 7103	WJG	2-22-80	WJG	
	04	51033	ADD LOCATOR TO EACH TAB	WJG	3-4-80	WJG	
	05	51086	[illegible]	WJG	3-3-80	WJG	
	06	51050	TAB F/N 12 WAS 5191 8788	WJG	5-13-80	WJG	
	07	51103	F/N 3 WAS [illegible]	WJG	5-30-80	WJG	
	08	51112	CHG DTAG F/N 14, 17, 25	WJG	[illegible]	WJG	
	A	11565-81	RELEASED CLASS 3		6-30-80		
	B	14199	REVISED PER ECO	WJG	7-25-80	WJG	
	C	14165	INACTIVE SERVICE USE ONLY SUPERSEDED BY 61409021/22	WJG	7-1-80	WJG	

APL 66309318/19	DETACHED LISTS	TITLE: AC ENTRY ASSY, FLEX DISK	
UNLESS OTHERWISE SPECIFIED TOLERANCES 3 PLACE ±/ 2 PLACE ±/ ANGLES ±/		FA501A-B	
DO NOT SCALE DRAWING		DRAWN BY WJG 9-11-79	
		CHECKED BY WJG 9-12-79	
		ENGINEER 10/5/79	
		MFG 6-26-80	
		APPROVED 6-26-80	
		CODE IDENT 15920	D 66309318/19
		SCALE 1/1	NHA 15632209 SHEET / OF /

BUILD ARC 230

ASSEMBLY PARTS LIST

PRINT DATE	PAGE	FILE CHANGE NO.
09-08-80	1	00014165

DIV.	ASSEMBLY NUMBER	CD	REV.	DWG.	DESCRIPTION	MC	STATUS	STATUS DATE	ENG. RESP.	FILE DATE
0860	66309318	5	C	D	REPLACED BY 61409021 14165	A	INA	09-04-80	FA501A	09-08-80

T	FIND NO	LI	PART NUMBER	CD	M	QUANTITY		U/M	PART DESCRIPTION	MC	YLD	ECO. NO. IN	ECO. NO. OUT	S/N	WK IN	WK OUT
	001	01	71492952	8		1		PC	BRACKET SWITCH/FILTER/XFORM	P						
	002	01	71492953	6		1		PC	COVER SWITCH/FILTER	P						
	003	01	95587103	3		1		PC	CB D-P 250 VAC 3 AMP	P						
	004	01	15164356	6		1		PC	FILTER RFI	P						
	005	01	15012408	9		1		PC	BSHG, SNAP-IN .500 M/H .38ID	B						
	007	01	44674034	2		1		PC	CONN POWER RECEPT	P						
	008	01	15164917	5		2		PC	MSCR HEX-LK PLN M5X8MM STL Z	B						
	009	01	91976625	3		4		PC	MSCR PAN PHL M3X6MM	B						
	010	01	10125803	6		2		PC	WSHR, NO.6 SPG LOCK STL ZP	B						
	011	01	10127111	2		2		PC	MSCR PAN PHL 6-32X.250 STL ZP	B						
	014	01	91975669	2		2		PC	WSHR METRIC SCREW SZ 3	B						
	015	01	44674036	7		3		PC	CONN PWR RECPT	P						
	016	01	51797218	8		4		PC	LUG, NO.10 CRMP-R 22-18AWG	B			14199			8030
	016	02	51797218	8		3		PC	LUG, NO.10 CRMP-R 22-18AWG	B		14199			8030	
	017	01	24534707	5			249	FT	SLVG, 3/16 HT/SHRINK BLK UL	B			14199			8030
	017	02	51758103	9			249	FT	INS SLV+CLR,PVC HEAT SHRINK	B		14199			8030	
	018	01	51906200	4		3		PC	CONT, SKT 20-14GA .130IT STR	P						
	019	01	52810001	9			333	FT	WIR 18GA STRD BRN 600V UL PVC	W			14199			8030
	019	02	52810001	9			458	FT	WIR 18GA STRD BRN 600V UL PVC	W		14199			8030	
	020	01	52810005	0			708	FT	WIR 18GA STRD GRN 600V UL PVC	W			14199			8030
	020	02	52810005	0			833	FT	WIR 18GA STRD GRN 600V UL PVC	W		14199			8030	
	021	01	51906001	6		1		PC	CONN, 3 SKT PLUG FIG 1 NYLON	P						
	024	01	91975724	5		2		PC	NUT HEXAGON SZ 5MM	B						

BUILD ARC 230

ASSEMBLY PARTS LIST

PRINT DATE	PAGE	FILE CHANGE NO.
09-08-80	2	00014165

DIV.	ASSEMBLY NUMBER	CD	REV.	DWG.	DESCRIPTION	MC	STATUS	STATUS DATE	ENG. RESP.	FILE DATE
0860	66309318	5	C	D	REPLACED BY 61409021 14165	A	INA	09-04-80	FA501A	09-08-80

T	FIND NO	LI	PART NUMBER	CD	M	QUANTITY		U/M	PART DESCRIPTION	MC	YLD	ECO. NO. IN	ECO. NO. OUT	S/N	WK IN	WK OUT
	025	01	91975671	8		6		PC	WASHER EX TOOTH SZ 5	B						
	026	01	61408888	8		REF		PC	REPLACED BY 61409023 14165	D						
	027	01	52810006	8			417	FT	WIR 18GA STRD BLU 600V UL PVC	W		14199			8030	
	028	01	10125605	5		2		PC	WSHR, NO.6 TYP A PLN STL ZP	B		14199			8030	
									0027 TOTAL LINES							

BUILD ARC 230

ASSEMBLY PARTS LIST

PRINT DATE	PAGE	FILE CHANGE NO.
09-08-80	1	00014165

DIV.	ASSEMBLY NUMBER	CD	REV.	DWG.	DESCRIPTION	MC	STATUS	STATUS DATE	ENG. RESP.	FILE DATE
0860	66309319	3	C	D	REPLACED BY 61409022 14165	A	INA	09-04-80	FA501B	09-08-80

T	FIND NO	LI	PART NUMBER	CD	M	QUANTITY		U/M	PART DESCRIPTION	MC	YLD	ECO. NO. IN	ECO. NO. OUT	S/N	WK IN	WK OUT
	001	01	71492952	8		1		PC	BRACKET SWITCH/FILTER/XFORM	P						
	002	01	71492953	6		1		PC	COVER SWITCH/FILTER	P						
	003	01	95587103	3		1		PC	CB D-P 250 VAC 3 AMP	P						
	004	01	15164356	6		1		PC	FILTER RFI	P						
	005	01	15012408	9		1		PC	BSHG, SNAP-IN .500 M/H .38ID	B						
	007	01	44674034	2		1		PC	CONN POWER RECEPT	P						
	008	01	15164917	5		2		PC	MSCR HEX-LK PLN M5X8MM STL Z	B						
	009	01	91976625	3		4		PC	MSCR PAN PHL M3X6MM	B						
	010	01	10125803	6		2		PC	WSHR, NO.6 SPG LOCK STL ZP	B						
	011	01	10127111	2		2		PC	MSCR PAN PHL 6-32X.250 STL ZP	B						
	012	01	51918789	2		1		PC	XFMR STEP DOWN 220/240V	P						
	013	01	15165001	7		4		PC	NUT METRIC HEX-LK M5	B						
	014	01	91975669	2		2		PC	WSHR METRIC SCREW SZ 3	B						
	015	01	44674036	7		3		PC	CONN PWR RECPT	P						
	016	01	51797218	8		3		PC	LUG, NO.10 CRMP-R 22-18AWG	B						
	017	01	24534707	5			583	FT	SLVG, 3/16 HT/SHRINK BLK UL	B			14199			8030
	017	02	51758103	9			249	FT	INS SLV+CLR,PVC HEAT SHRINK	B		14199			8030	
	018	01	51906200	4		1		PC	CONT, SKT 20-14GA .130IT STR	P						
	019	01	52810001	9			250	FT	WIR 18GA STRD BRN 600V UL PVC	W			14199			8030
	019	02	52810001	9			458	FT	WIR 18GA STRD BRN 600V UL PVC	W		14199			8030	
	020	01	52810005	0			708	FT	WIR 18GA STRD GRN 600V UL PVC	W			14199			8030
	020	02	52810005	0			833	FT	WIR 18GA STRD GRN 600V UL PVC	W		14199			8030	

BUILD ARC 230

ASSEMBLY PARTS LIST

PRINT DATE	PAGE	FILE CHANGE NO.
09-08-80	2	00014165

DIV.	ASSEMBLY NUMBER	CD	REV.	DWG.	DESCRIPTION	MC	STATUS	STATUS DATE	ENG. RESP.	FILE DATE
0860	66309319	3	C	D	REPLACED BY 61409022 14165	A	INA	09-04-80	FA501B	09-08-80

T	FIND NO	LI	PART NUMBER	CD	M	QUANTITY		U/M	PART DESCRIPTION	MC	YLD	ECO. NO. IN	ECO. NO. OUT	S/N	WK IN	WK OUT
	022	01	51918969	0		1		PC	SWITCH VOLTAGE SELECTOR	P						
	023	01	51873600	4			001	OZ	VARNISH INSUL RED GLPT	B						
	024	01	91975724	5		2		PC	NUT HEXAGON SZ 5MM	B						
	025	01	91975671	8		6		PC	WASHER EX TOOTH SZ 5	B						
	026	01	61408889	6		REF		PC	REPLACED BY 61409024 14165	D						
	028	01	10125605	5		2		PC	WSHR, NO.6 TYP A PLN STL ZP	B		14199			8030	
	029	01	51758101	3			188	FT	INS SLV CLR PVC HEAT SHRINK	B		14199			8030	
									0029 TOTAL LINES							

PARTS DATA FOR PRODUCTION UNITS ONLY

DWN	W. Glaser	8/80	CONTROL DATA
CHKD	D. [illegible]	8-80	
ENG	[illegible]	9/2/80	
MFG	[illegible]	9-2-80	
APPR	[illegible]	9-3-80	CODE IDENT 15920
	[illegible]	9-3-80	

TITLE	PREFIX	DOCUMENT NO.	REV.
60 HZ SPL PLATO FLEXIBLE DISK SUBSYSTEM	SPL	66313407	D

FIRST USED ON FA501A

SHEET 1 of 3

SHEET REVISION STATUS

3	2	1
A	A	A
B	A	B
C	C	C
D	D	D

REVISION RECORD

REV	ECO	DESCRIPTION	DRFT	DATE	APP
A	12759-76	RELEASED CLASS A	/	9-3-80	[illegible]
B	14292	ADD F/N 16	DS	9-80	[illegible]
C	14376	REVISED PER ECO	EE	1/12/81	[illegible]
D	14571	CHG F/N 1,12,17, DELETE NOTE 3	WJG 3-2-81	3-2-81	[illegible]

NOTES:

EQUIPMENT CONFIGURATOR - 15632205

TOP LEVEL ASSEMBLY ----- 15632572

DETACHED LISTS

AA2166 REV. 6'71

PRINTED IN U.S.A.

CONTROL DATA CORPORATION

CODE IDENT	SHEET	PREFIX	DOCUMENT NO.	REV.
15920	2	SPL	66313407	D

NOTES:

1. These parts are the total required for a unit with no options installed.
2. A unit could have 3 RAM options of 8 RAM IC's for each option for a total of 32 RAM IC's in the unit.

4. Find Numbers 1 thru 7 and 17 are for the 98ED Controller Board.

5. Find Number 9 is the signal cable used to connect the PLATO Flexible Disk Subsystem to the IST Terminal.

6. One of these devices is required on the last device on the Plato IST Parallel I/O channel daisy chain configuration.

AA2166

PRINTED IN U.S.A.

CONTROL DATA	CODE IDENT	SHEET	S PL	DOCUMENT NO.	REV.
	15920	3		66313407	D

FIND NO.	PART IDENTIFICATION	QUANTITY REQUIRED	UNIT OF MEAS	NOMENCLATURE OR DESCRIPTION	SPECIFICATIONS, NOTES, OR MATERIAL
1	66312070	1		2716 2KX8 ROM	4
2	15153821	8		4116 16K RAM	4
3	15163201	1		Z80 Processor	4
4	15163444	1		FD1791 Disk Controller	4
5	15163458	1		9517 DMA	4
6	15163459	1		9519 Interrupt Cont.	4
7	15164429	1		Z80A-CTC	4
8	15165425	1		60HZ Power Cord	
9	61408865	1		25 Pin I/O Cable	5
10	96837907	1		Circuit Breaker	
11	77618000	1		Flexible Disk Assembly	
12	90446284	1		98ED Controller Board	
13	90446140	1		98KD Power Supply	
14	90446143	1		98MD Backplane	
15	15632316	1		FT116A Terminator	6
16	61409021	1		AC Entry Assy	
17	66312071	1		2716 2KX8 Rom	4

AA8101 REV. 6/71 PRINTED IN U.S.A.

DWN	W. Glaser	8/80	CONTROL DATA	TITLE 50 HZ SPL PLATO FLEXIBLE DISK SUBSYSTEM	PREFIX SPL	DOCUMENT NO. 66313408	REV. C
CHKD		9-30					
ENG		9-2-80					
MFG		9-3-80		FIRST USED ON FA5018..		SHEET 1 of 3	
APPR		9-3-80	CODE IDENT 15920				

SHEET REVISION STATUS

3	2	1
A	A	A
B	B	B
C	C	C

REVISION RECORD

REV	ECO	DESCRIPTION	DRFT	DATE	APP
A	12754-76	RELEASED CLASS "A"		9-3-80	[illegible]
B	14376	REVISED PER ECO	EE	1/12/81	[illegible]
C	14571	CHG F/N 1,13,17, DELETE NOTE 3	WJG 3-2-81	3-2-81	[illegible]

NOTES:

EQUIPMENT CONFIGURATOR - 15632206

TOP LEVEL ASSEMBLY ----- 15632573

DETACHED LISTS

AA2100 REV. 6/71 PRINTED IN U.S.A.

CONTROL DATA CORPORATION	CODE IDENT 15920	SHEET 2	SPL	DOCUMENT NO. 66313408	REV. C

NOTES:

1. These parts are the total required for a unit with no options installed.
2. A unit could have 3 RAM options of 8 RAM IC's for each option for a total of 32 RAM IC's in the unit.

4. Fine Numbers 1 thru 7 and 17 are for the 9BED Controller Board.

5. Find Number 10 is the signal cable used to connect the PLATO Flexible Disk Subsystem to the IST Terminal.

6. One of these devices is required on the last device on the PLATO IST Parallel I/O Channel daisy chain configuration.

AA2100 PRINTED IN U.S.A.

CONTROL DATA	CODE IDENT	SHEET		DOCUMENT NO.	REV.
	15920	3	SPL	66313408	C

FIND NO.	PART IDENTIFICATION	QUANTITY REQUIRED										UNIT OF MEAS		NOMENCLATURE OR DESCRIPTION	SPECIFICATIONS, NOTES, OR MATERIAL
1	66312070	1												2716 2KX8 ROM	4
2	15153621	8												4116 16K RAM	4
3	15163201	1												Z80 Processor	4
4	15163444	1												FD1791 Disk Controller	4
5	15163458	1												9517 DMA	4
6	15163459	1												9519 Interrupt Cont.	4
7	15164429	1												Z80A-CTC	4
8	15165426	1												50HZ Power Cord	
9	61409022	1												AC Entry Assy	
10	61408665	1												25 pin I/O Cable	5
11	96837907	1												Circuit Breaker	
12	77618000	1												Flexible Disk Assy	
13	90446284	1												98ED Controller Board	
14	90446140	1												98KD Power Supply	
15	90446143	1												98MD Backplane	
16	15632316	1												FT116A Terminator	6
17	66312071	1												2716 2KX8 Rom	4

DWN	W. Glaser	8/80	CONTROL DATA	TITLE 60 HZ SPL PLATO SLAVE FLEXIBLE DISK	PREFIX SPL	DOCUMENT NO. 66313409	REV. 1
CHKD		8/80					
ENG		9/2/80					
MFG		9-3-80		FIRST USED ON BR810A			
APPR		9-3-80	CODE IDENT 15920			SHEET 1 of 3	
		9/3/80					

SHEET REVISION STATUS

3	2	1
A	A	A
B	A	B

REVISION RECORD

REV	ECO	DESCRIPTION	DRFT	DATE	APP
A	12754-76	RELEASED CLASS A		9-3-80	
B	14292	ADD F/N 7	DS	9-80	

NOTES:

EQUIPMENT CONFIGURATOR - 15632207

TOP LEVEL ASSEMBLY ----- 15632574

DETACHED LISTS

CONTROL DATA CORPORATION	CODE IDENT 15920	SHEET 2	SPL	DOCUMENT NO. 66313409	REV. A

NOTES:

1. These parts are the total required for a unit with no options installed.

2. Find number 2 is the Signal Cable used to connect the BR810A or BR810B to the FA501A or FA501B.

CONTROL DATA		CODE IDENT 15920	SHEET 3	S PL	DOCUMENT NO. 66313409	REV. B

FIND NO.	PART IDENTIFICATION	QUANTITY REQUIRED										UNIT OF MEAS		NOMENCLATURE OR DESCRIPTION	SPECIFICATIONS, NOTES, OR MATERIAL
1	15165425	1												60HZ Power Cord	
2.	61408976	1												Slave Signal Cable	△2
3	96837907	1												Circuit Breaker	
4	77618000	1												Flexible Disk Assy	
5	90446140	1												9BKD Power Supply	
6	90446143	1												9BMD Backplane	
7	61409021	1												AC Entry Assy	

DWN	W.Glaser	8/80	CONTROL DATA	TITLE 50 HZ SPL PLATO SLAVE FLEXIBLE DISK	PREFIX SPL	DOCUMENT NO. 66313410	REV. A
CHKD							
ENG							
MFG				FIRST USED ON BR810B		SHEET 1 of 3	
APPR			CODE IDENT 15920				

SHEET REVISION STATUS

3	2	1
A	A	A

REVISION RECORD

REV	ECO	DESCRIPTION	DRFT	DATE	APP
A	12754-26	RELEASED CLASS "A"		23-80	

NOTES:

EQUIPMENT CONFIGURATOR - 15632208
TOP LEVEL ASSEMBLY ----- 15632575

DETACHED LISTS

CONTROL DATA CORPORATION	CODE IDENT 15920	SHEET 2	SPL	DOCUMENT NO. 66313410	REV. A

NOTES:

1. These parts are the total required for a unit with no options installed.
2. Find number 3 is the Signal Cable used to connect the BR810A or BR810B to the FA501A or FA501B.

CONTROL DATA	CODE IDENT 15920	SHEET 3	S PL	DOCUMENT NO. 66313410	REV. A

FIND NO.	PART IDENTIFICATION	QUANTITY REQUIRED										UNIT OF MEAS		NOMENCLATURE OR DESCRIPTION	SPECIFICATIONS, NOTES, OR MATERIAL
1	15165426	1												50HZ Power Cord	
2	61409022	1												AC Entry Assy	
3	61408976	1												Slave Signal Cable	2
4	96837907	1												Circuit Breaker	
5	77618000	1												Flexible Disk Assembly	
6	90446140	1												9BKD Power Supply	
7	90446143	1												9BMD Backplane	

SHEET REVISION STATUS						

REVISION RECORD

REV	CO	DESCRIPTION	DRFT	DATE	CHKD	APP
00	50004-12	RELEASED CLASS B	—	12/2/69	—	[illegible]
01	51118	DELETE 90446147	WJG	6-9-80	WJH	[illegible]
A	11565-88	RELEASED CLASS A	/	7-23-80	/	[illegible]
B	14165	REVISED PER ECO	WJH	9/1/80	WJG	[illegible]
C	14376	LOGIC WAS 90446124	EE	1/12/81	EE	[illegible]
D	14571	98ED PWB WAS 90446260	WJG	1-2-81	WJG	[illegible]

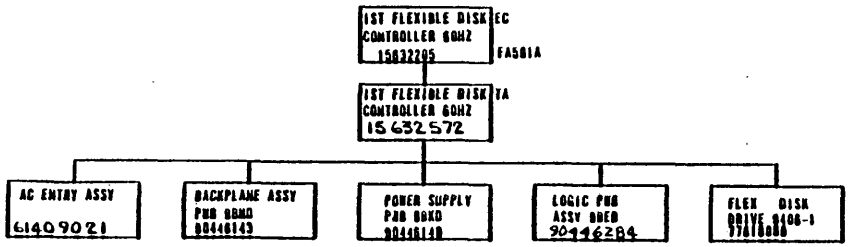

REFERENCE DOCUMENTS

ENGINEERING SPECIFICATION..... 16042854

SPARE PARTS LIST..... 66313407

SCHEMATIC DIAGRAM (8BKD)..... 90446138

SCHEMATIC DIAGRAM (8BWD)..... 90446141

SCHEMATIC DIAGRAM (8BED)..... 90446122

SCHEMATIC WIRING 62201057

REFERENCE DRAWING			
COMPONENTS, EXCEPT AS NOTED			
	TOLERANCE	VALUE	RATING
RES			
CAP			

[redacted]

FIRST USED ON	FA501A	
DWN	R. Poulsman	7-12-79
CHKD		
ENGR	R.B.Pitel	10/26/79
MFG	[illegible]	2-10-80
APPR	[illegible]	7-15-80

TITLE

GENEALOGY CHART
PLATO MASTER FLEXIBLE DISK
SUBSYSTEM 60 HZ

CODE IDENT		DRAWING NO
15920	C	66310611

SCALE | CROSS REF NO | SHEET / OF /

62949100 D

SHEET REVISION STATUS

REVISION RECORD

REV	CO	DESCRIPTION	DRFT	DATE	CHKD	APP
00	60004-12	RELEASED CLASS B	/	10/21/77	/	[illegible]
01	51118	DELETE 90446147	WJG	6-9-80	WJG	[illegible]
02	51172	SPL WAS 66308922	WJG	7-22-80	WJG	PAM
A	115LS-88	RELEASED CLASS A	/	7-23-80	/	[illegible]
B	14165	REVISED PER ECO	WJG	9-4-80	WJG	[illegible]
C	14376	LOGIC WAS 90446124	EE	1/12/81	EE	[illegible]
D	14571	98ED PWB WAS 90446260	WJG	3-2-81	WJG	[illegible]

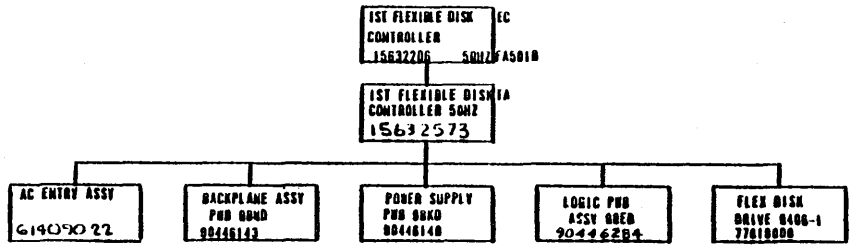

REFERENCE DOCUMENTS

ENGINEERING SPECIFICATION	16042054
SPARE PARTS LIST	EE 31-40B
SCHEMATIC DIAGRAM 88KD	90446138
SCHEMATIC DIAGRAM 88MD	90446141
SCHEMATIC DIAGRAM 88EB	90446122
SCHEMATIC WIRING	6220 CS7

REFERENCE DRAWING

COMPONENTS, EXCEPT AS NOTED	TOLERANCE	VALUE	RATING
RES			
CAP			

CONTROL DATA

FIRST USED ON	FA501B	
DWN	R Trautman	9-12-79
CHKD	[illegible]	10/16/79
ENGR	[illegible]	2-10-80
MFG	[illegible]	7-15-80
APPR	[illegible]	

TITLE
GENEALOGY CHART
PLATO MASTER FLEXIBLE DISK
SUBSYSTEM 50 HZ

CODE IDENT 15920 | C | DRAWING NO 66310613

SCALE | CROSS REF NO | SHEET / OF /

SHEET REVISION STATUS	REVISION RECORD						
	REV	CO	DESCRIPTION	DRFT	DATE	CHKD	APP
	00	50004-12	RELEASED CLASS B		[illegible]		
	01	51118	DELETE 90446147	WJG	6-9-80	WJG	[illegible]
	A	11565-88	RELEASED CLASS "A"		[illegible]		[illegible]
	B	14165	REVISED PER ECO	WJL	9/11/80	[illegible]	[illegible]

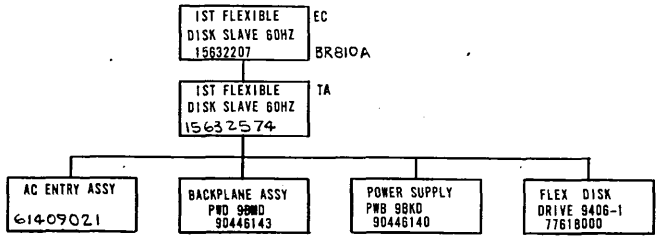

REFERENCE DOCUMENTS

ENGINEERING SPECIFICATION.....16342354
SPARE PARTS LIST.....66313409
SCHEMATIC DIAGRAM (98KD).....90446138
SCHEMATIC DIAGRAM (98MD).....90446141
SCHEMATIC WIRING 62201057

REFERENCE DRAWING						
COMPONENTS, EXCEPT AS NOTED	TOLERANCE	VALUE	RATING			
RES						
CAP						

FIRST USED ON	BR810A	
DWN	R Trautman	9-12-79
CHKD		
ENGR	[illegible]	[illegible]
MFG	[illegible]	7-10-80
APPR	[illegible]	7-15-80

TITLE
GENEALOGY CHART
PLATO SLAVE FLEXIBLE DISK DRIVE 60HZ

CODE IDENT 15920 | C | DRAWING NO 66310612

SCALE | CROSS REF NO | SHEET / OF /

62949100

SHEET REVISION STATUS	REVISION RECORD					
	REV	CO	DESCRIPTION	DRFT	DATE	CHKD	APP
	00	60004-12	RELEASED CLASS B		[illegible]		
	01	51118	DELETE 90446147	WJG	6-9-80	[illegible]	[illegible]
	02	51172	SPL WAS 66308920	WJG	7-22-80	[illegible]	[illegible]
	A	11565-88	RELEASED CLASS A		[illegible]		[illegible]
	B	14 03	REVISED PER ECO	[illegible]	[illegible]	[illegible]	[illegible]

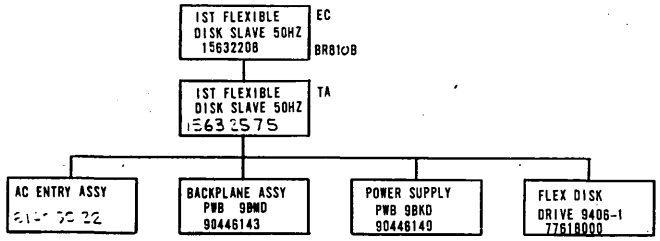

REFERENCE DOCUMENTS

ENGINEERING SPECIFICATION.....16042854

SPARE PARTS LIST.....[illegible]

SCHEMATIC DIAGRAM (9BKD).....90446138

SCHEMATIC DIAGRAM (9BMD).....90446141

SCHEMATIC DIAGRAM [illegible]

REFERENCE DRAWING				UNITRI	IAL	
				FIRST USED ON	BR810B	
				DWN	R Trautman	9-12-79
COMPONENTS, EXCEPT AS NOTED				CHKD		
	TOLERANCE	VALUE	RATING	ENGR	[illegible]	10/24/79
RES				MFG	[illegible]	7-10-80
CAP				APPR	[illegible]	7-15-80

TITLE
GENEALOGY CHART
PLATO SLAVE FLEXIBLE DISK DRIVE 50HZ

CODE IDENT 15920 | C | DRAWING NO 66310614

SCALE | CROSS REF NO | SHEET 1 OF 1

15632572	CONTROLLER	60 HZ
15632573,	CONTROLLER	50 HZ
15632574	SLAVE	60 HZ
15632575	SLAVE	50 HZ

REVISION RECORD					
REV	ECO	DESCRIPTION			
A		RELEASED CLASS 'A'			
B	15328	CHANGED, ADDED			
C	14876	E/L CHANGE ONLY			
D	15391	REVISED PER ECO			
E	14854	REVISED PER ECO			
F	15571				

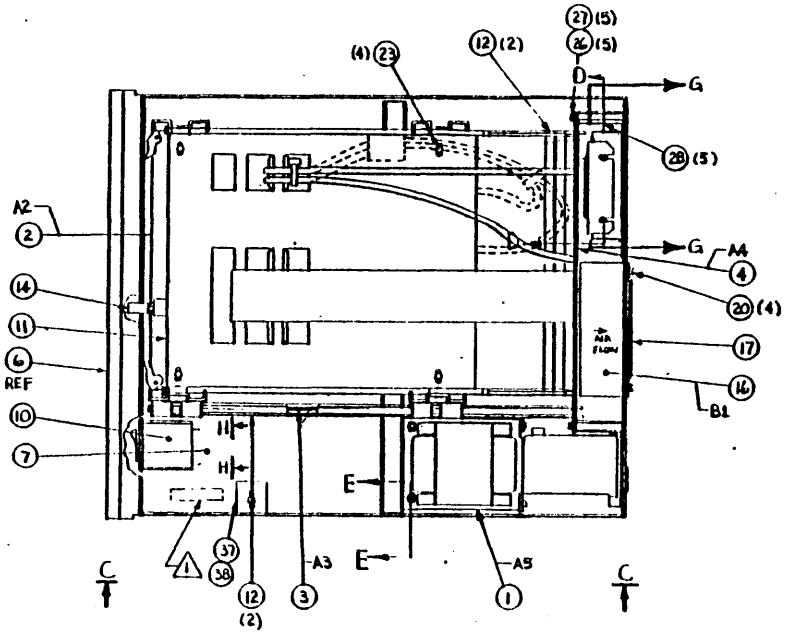

(TOP VIEW SHOWN WITH ITEMS 5,8,9, & 18 REMOVED)

NOTES:

1. MARK "ASSY 15632572" IN AREA SHOWN PER CDC SPEC 10121508.
2. CONNECT SUBASSEMBLIES AS FOLLOWS:
   PLUG A4P1 INTO A1J9
   PLUG A4P2 INTO A1J4
   PLUG A4P3 INTO A1J1
   PLUG A4P4 INTO B1J1
   PLUG A5P3 INTO A4J3
3. MARK NO'S ONLY PER CDC SPEC 10121508, .12 HIGH, WHITE, IN LOCATION APPROX AS SHOWN.

METRIC

APL 15632572 THRU 15632575

CONTROL DATA

FA501A/B

DO NOT SCALE DRAWING

PLATO FLEXIBLE DISK (TLA)

15920 D 15632572 THRU 15632575

SCALE 1/2 SHEET 1 OF 2

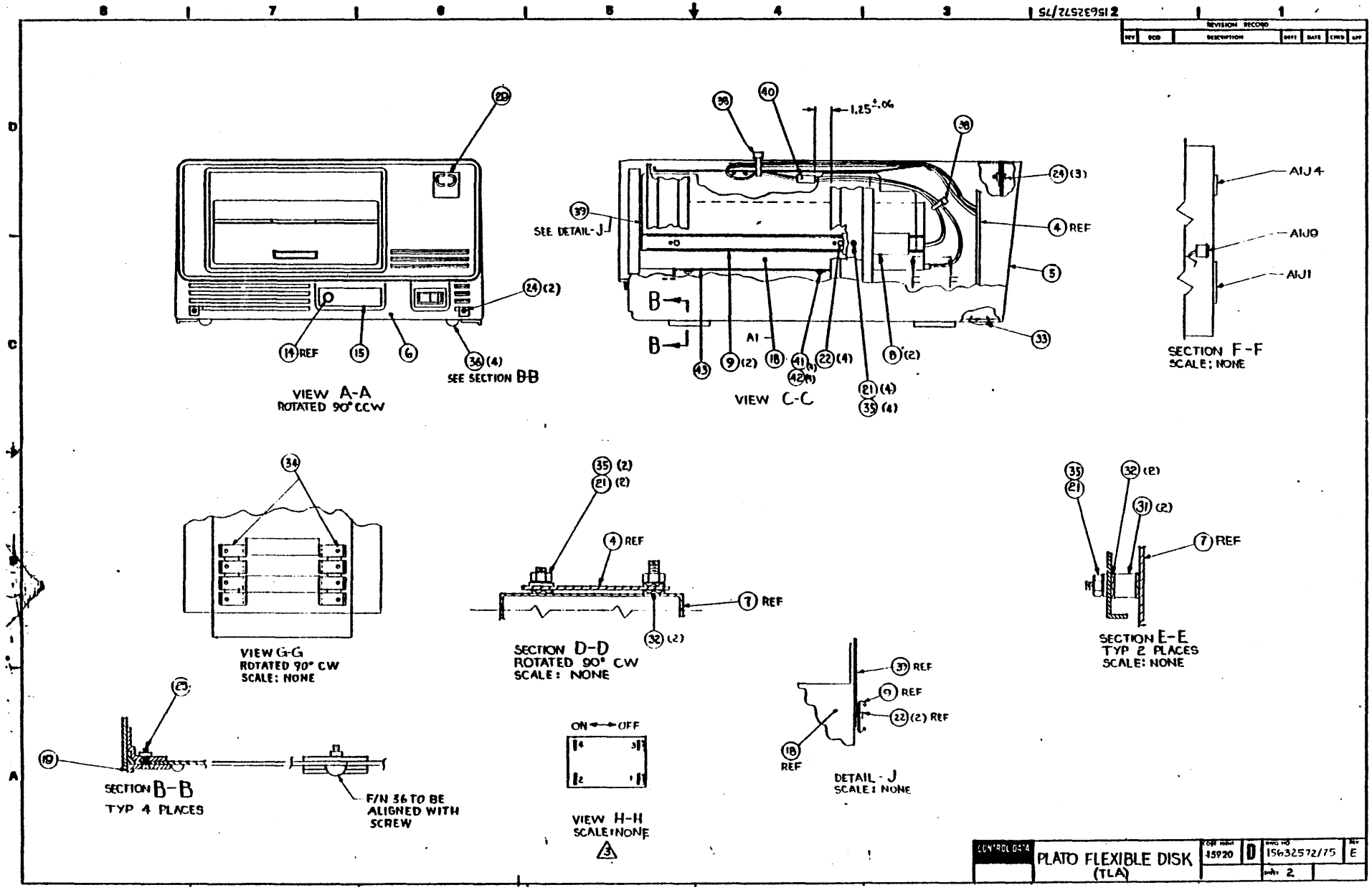
REVISION RECORD
REV ECO DESCRIPTION DRFT DATE CHKD APP
VIEW A-A
ROTATED 90° CCW
14 REF
15
6
36 (4)
SEE SECTION B-B
23
24 (2)
VIEW C-C
SEE DETAIL-J
1.25 ±.06
38
40
39
24 (3)
4 REF
5
33
B
A
43
9 (2)
18
41 (4)
42 (4)
22 (4)
8 (2)
21 (4)
35 (4)
SECTION F-F
SCALE: NONE
AIJ4
AIJ0
AIJ1
VIEW G-G
ROTATED 90° CW
SCALE: NONE
34
SECTION D-D
ROTATED 90° CW
SCALE: NONE
35 (2)
21 (2)
4 REF
7 REF
32 (2)
SECTION E-E
TYP 2 PLACES
SCALE: NONE
35
21
32 (2)
31 (2)
7 REF
SECTION B-B
TYP 4 PLACES
23
19
F/N 36 TO BE
ALIGNED WITH
SCREW
VIEW H-H
SCALE: NONE
3
ON ← → OFF
DETAIL - J
SCALE: NONE
37 REF
9 REF
22 (2) REF
18
REF
CONTROL DATA
PLATO FLEXIBLE DISK
(TLA)
CAGE CODE 35920
D
DWG NO 15632572/75
REV E
SHT 2

ASSEMBLY PARTS LIST

BUILD ARC 440

PRINT DATE	PAGE	FILE CHANGE NO.
01-06-81	1	14571 ~~0001AAE4~~

DIV.	ASSEMBLY NUMBER	CD	REV.	DWG.	DESCRIPTION	MC	STATUS	STATUS DATE	ENG. RESP.	FILE DATE
0860	15632572 2	F	E	0	FOD, PLATO MASTER 60HZ (TA)	G	REL	09-03-80	FA501A	01-06-81

TIMING NO	LI	PART NUMBER	CD	UM	QUANTITY	U/M	PART DESCRIPTION	MC	TLD	ECO. NO. IN	ECO. NO. OUT	S/N	WE IN	WE OUT
001	01	61409021	5		1	PC	AC ENTRY, FLEX DISK 60HZ	A						
002	01	90446124	1		1	PC	REPLACED BY 90446260 14376	S			14376			8041
002	02	90446260	3		1	PC	PW BD ASSY 98ED	S		14376	14571		8041	
002	03	90446284			1	PC	PW BD ASSY 98ED			14571				
003	01	90444140	7		1	PC	CD ASSY 98KD PWR SPLY	A						
004	01	90446143	1		1	PC	CD ASSY 98MD BACKPLANE	A						
005	01	71493032	8		1	PC	COVER METAL AL	P						
006	01	71493185	4		1	PC	FACE PLATE	P						
007	01	71493188	8		1	PC	BASE	P						
008	01	71492950	2		2	PC	TRACK DISK MTG	P						
009	01	71492951	0		2	PC	SLIDE DISK MTG	P						
010	01	96837987	3		1	PC	CKT BRKR MAGNETIC 3.0 AMPS	P						
011	01	71492955	1		1	PC	PANEL CABLE SUPPORT	P						
012	01	71492966	8		4	PC	GUIDE CARD	P						
014	01	71492968	4		1	PC	BUTTON SWITCH	P						
015	01	71493055	9		1	PC	PANEL SWITCH IND	P						
016	01	51886608	9		1	PC	FAN, 50CFM 115V 50/60HZ 1PH	P						
017	01	94375401	0		1	PC	GUARD, FAN 50/60HZ	P						
018	01	77518000	2		1	PC	FLEX DISK DRV, 9406 2-SIDED	V						
019	01	71493064	1		4	PC	FOOT	P						
020	01	91976649	3		4	PC	MSCR PAN PHL M4X40MM	B						
021	01	91975724	5		8	PC	NUT HEXAGON SZ 5MM	B						

ASSEMBLY PARTS LIST

BUILD ARC 440

PRINT DATE	PAGE	FILE CHANGE NO.
01-06-81	2	14571 ~~0001AAE4~~

DIV.	ASSEMBLY NUMBER	CD	REV.	DWG.	DESCRIPTION	MC	STATUS	STATUS DATE	ENG. RESP.	FILE DATE
0860	15632572 2	F	E	0	FOD, PLATO MASTER 60HZ (TA)	G	REL	09-03-80	FA501A	01-06-81

TIMING NO	LI	PART NUMBER	CD	UM	QUANTITY	U/M	PART DESCRIPTION	MC	TLD	ECO. NO. IN	ECO. NO. OUT	S/N	WE IN	WE OUT
022	01	15164911	8		4	PC	MSCR HEX-LK PLN M4X8MM STL ZP	B						
023	01	15164917	5		4	PC	MSCR HEX-LK PLN M5X8MM STL Z	B						
024	01	91976758	2		5	PC	MSCR PNM M5X10MM	B						
025	01	91976864	8		4	PC	MSCR MACH FLH M5X10MM	B						
026	01	91976652	7		5	PC	MSCR PAN PHL M5X10MM	B						
027	01	91975706	2		5	PC	WASHER LK METRIC M5	B						
028	01	71493078	1		5	PC	STANDOFF HEX METRIC CRS	B						
029	01	51918435	2		1	PC	EMBLEM, CDC ID	P			14328			8044
029	02	66312548	2		1	PC	EMBLEM CDC PLATO	P		14328			8044	
031	01	93109381	9		2	PC	STOFF,NO.1/4 .250L RD ZINC	B						
032	01	91975684	1		6	PC	WSHR METRIC SZ 5 SCREW	B						
033	01	93522018	6		1	PC	PLUG,SNAP BUTTON 1 1/4 DIA HO	P						
034	01	94374900	2			125	PC	STRIP CONTACT	P					
035	01	09040204	1		8	PC	WSHR, NO.10 DISHED LOCK STL	B						
036	01	51805700	5		4	PC	BUMPER SELF STICKING	P						
037	01	62044280	4		1	PC	CLAMP-CABLE ADHESIVE BACK	B						
038	01	94277400	1		1	PC	STRAP, CBL TIE TYP 1 TO 5/8	B			14391			8047
038	02	94277400	1		2	PC	STRAP, CBL TIE TYP 1 TO 5/8	B		14391	14391A		8047	8047
038	03	94277400	1		3	PC	STRAP, CBL TIE TYP 1 TO 5/8	B		14391A			8047	
039	01	71493230	8		1	PC	SHIELD	P		14328			8044	
040	01	94982303	9		1	PC	CORD CLIP	P		14391A			8047	
041	01	10127103	9		4	PC	MSCR PAN PHL 4-40X.312 STL ZP	B		14454			8041	

BUILD ARC 440

ASSEMBLY PARTS LIST

PRINT DATE	PAGE	FILE CHANGE NO.
01-06-81	3	M571 ~~00014454~~

DIV.	ASSEMBLY NUMBER	CD	REV.	DWG.	DESCRIPTION	MC	STATUS	STATUS DATE	ENG. RESP.	FILE DATE
0860	15632572	2	FX	D	FDO, PLATO MASTER 40MZ (TA)	6	REL	09-03-80	FA501A	01-06-81

TOTAL NO.	LI	PART NUMBER	CD	QUANTITY	U/M	PART DESCRIPTION	MC	TLB	ECO. NO. IN	ECO. NO. OUT	S/N	WE IN	WE OUT
042	01	10126400	0	4	PC	WSHR, NO.4 EXT/T LK STL ZP	B		14454			8041	
043	01	71403269	6	1	PC	SHIELD	P		14454			8041	
						0045 TOTAL LINES							

BUILD ARC 440

ASSEMBLY PARTS LIST

PRINT DATE	PAGE	FILE CHANGE NO.
01-06-81	1	14571 ~~00001454~~

DIV.	ASSEMBLY NUMBER	CD	REV.	DWG.	DESCRIPTION	MC	STATUS	STATUS DATE	ENG. RESP.	FILE DATE
0840	15432573		F1	0	FDD, PLATO MASTER 50HZ (TA)	0	REL	09-03-80	FA5018	01-06-81

TYPING NO	LI	PART NUMBER	CD	MN	QUANTITY	U/M	PART DESCRIPTION	MC	TLB	ECO. NO. IN	ECO. NO. OUT	S/N	WE IN	WE OUT
001	01	61489022	3		1	PC	AC ENTRY, FLEX DISK 50HZ	A						
002	01	90446124	1		1	PC	REPLACED BY 90446260 14376	S			14376			8041
002	02	90446260	3		1	PC	PW BD ASSY 98ED	S		14376	14571		8041	
002	02	90446284			1	PC	PW BD ASSY 9 8ED			14571				
003	01	90446140	7		1	PC	CD ASSY 98KD PWR SPLY	A						
004	01	90446143	1		1	PC	CD ASSY 98HO BACKPLANE	A						
005	01	71493032	6		1	PC	COVER METAL AL	P						
006	01	71493185	4		1	PC	FACE PLATE	P						
007	01	71493188	8		1	PC	BASE	P						
008	01	71492950	2		2	PC	TRACK DISK MTG	P						
009	01	71492951	0		2	PC	SLIDE DISK MTG	P						
010	01	96837907	3		1	PC	CKT BRKR MAGNETIC 3.0 AMPS	P						
011	01	71492955	1		1	PC	PANEL CABLE SUPPORT	P						
012	01	71492964	8		4	PC	GUIDE CARD	P						
014	01	71492968	4		1	PC	BUTTON SWITCH	P						
015	01	71493055	9		1	PC	PANEL SWITCH 1ND	P						
016	01	51886600	9		1	PC	FAN, 50CFM 115V 50/60HZ 1PH	P						
017	01	94375401	0		1	PC	GUARD, FAN 50/60HZ	P						
018	01	77618000	2		1	PC	FLEX DISK DRV, 9406 2-SIDED	V						
019	01	71493064	1		4	PC	FOOT	P						
020	01	91976649	3		4	PC	MSCR PAN PHL M4X40MM	B						
021	01	91975724	5		8	PC	NUT HEXAGON SZ 5MM	B						

BUILD ARC 440

ASSEMBLY PARTS LIST

PRINT DATE	PAGE	FILE CHANGE NO.
01-06-81	2	14571 ~~00001454~~

DIV.	ASSEMBLY NUMBER	CD	REV.	DWG.	DESCRIPTION	MC	STATUS	STATUS DATE	ENG. RESP.	FILE DATE
0840	15432573	0	F1	0	FDD, PLATO MASTER 50HZ (TA)	0	REL	09-03-80	FA5018	01-06-81

TYPING NO	LI	PART NUMBER	CD	MN	QUANTITY	U/M	PART DESCRIPTION	MC	TLB	ECO. NO. IN	ECO. NO. OUT	S/N	WE IN	WE OUT
022	01	15164911	8		4	PC	MSCR HEX-LK PLN M4X8MM STL ZP	B						
023	01	15164917	5		4	PC	MSCR HEX-LK PLN M5X8MM STL Z	B						
024	01	91976758	2		5	PC	MSCR PNM M5X10MM	B						
025	01	91976864	8		4	PC	MSCR MACH FLH M5X10MM	B						
026	01	91976652	7		5	PC	MSCR PAN PHL M5X10MM	B						
027	01	91975706	2		5	PC	WASHER LK METRIC M5	B						
028	01	71493078	1		5	PC	STANDOFF HEX METRIC CRS	B						
029	01	51918435	2		1	PC	EMBLEM, CDC ID	P			14328			8044
029	02	66312548	2		1	PC	EMBLEM CDC PLATO	P		14328			8044	
031	01	93109381	9		2	PC	STOFF,NO.1/4 .250L RD ZINC	B						
032	01	91975684	1		6	PC	WSHR METRIC SZ 5 SCREW	B						
033	01	93522018	6		1	PC	PLUG,SNAP BUTTON 1 1/4 DIA HO	P						
034	01	94374900	2		125	PC	STRIP CONTACT	P						
035	01	09846284	1		8	PC	WSHR, NO.10 DISHED LOCK STL	B						
036	01	51805700	5		4	PC	BUMPER SELF STICKING	P						
037	01	62044200	4		1	PC	CLAMP-CABLE ADHESIVE BACK	B						
038	01	94277400	1		1	PC	STRAP, CBL TIE TYP 1 TO 5/8	B			14391			8047
038	02	94277400	1		2	PC	STRAP, CBL TIE TYP 1 TO 5/8	B		14391	14391A		8047	8047
038	03	94277400	1		3	PC	STRAP, CBL TIE TYP 1 TO 5/8	B		14391A			8047	
039	01	71493230	8		1	PC	SHIELD	P		14328			8044	
040	01	94952303	9		1	PC	CORD CLIP	P		14391A			8047	
041	01	10127103	9		4	PC	MSCR PAN PHL 4-40X.312 STL ZP	B		14454			8041	

BUILD ARC 440

ASSEMBLY PARTS LIST

PRINT DATE	PAGE	FILE CHANGE NO.
01-06-81	3	14571 ~~[illegible]~~

DIV.	ASSEMBLY NUMBER	CD	REV.	DWG.	DESCRIPTION	MC	STATUS	STATUS DATE	ENG. RESP.	FILE DATE
0868	15632573	C	FX	D	FOD, PLATO MASTER 50MZ (TA)	6	REL	09-03-80	FA501B	01-06-81

TYPING NO.	LI	PART NUMBER	CD IN	QUANTITY	U/M	PART DESCRIPTION	MC	TLD	ECO. NO. IN	ECO. NO. OUT	U/M	WE IN	WE OUT
042	01	10126408	0	4	PC	WSHR, NO.4 EXT/T LK STL ZP	8		14454			8041	
043	01	71493269	6	1	PC	SHIELD	P		14454			8041	
						0045 TOTAL LINES							

BUILD ARC 440

ASSEMBLY PARTS LIST

PRINT DATE	PAGE	FILE CHANGE NO.
01-06-81	1	14671 ~~00014094~~

DIV.	ASSEMBLY NUMBER	CD	REV.	SUBG.	DESCRIPTION	MC	STATUS	STATUS DATE	ENG. DISP.	FILE DATE
0840	15632574	8	FE	0	FDO, PLATO SLAVE 60HZ (TA)	G	REL	09-03-80	8R810A	01-06-81

TRANS NO	LI	PART NUMBER	CD	QUANTITY		U/M	PART DESCRIPTION	MC	YLD	ECO. NO. IN	ECO. NO. OUT	S/N	WE IN	WE OUT
001	01	61409021	5	1		PC	AC ENTRY, FLEX DISK 60HZ	A						
003	01	90446140	7	1		PC	CD ASSY 98KD PWR SPLY	A						
004	01	90446143	1	1		PC	CD ASSY 98MD BACKPLANE	A						
005	01	71493032	8	1		PC	COVER METAL AL	P						
006	01	71493185	4	1		PC	FACE PLATE	P						
007	01	71493188	8	1		PC	BASE	P						
008	01	71492950	2	2		PC	TRACK DISK MTG	P						
009	01	71492951	0	2		PC	SLIDE DISK MTG	P						
010	01	96837907	3	1		PC	CKT BRKR MAGNETIC 3.0 AMPS	P						
011	01	71492955	1	1		PC	PANEL CABLE SUPPORT	P						
012	01	71492966	8	2		PC	GUIDE CARD	P						
014	01	71492948	4	1		PC	BUTTON SWITCH	P						
015	01	71493054	2	1		PC	PANEL SWITCH INDICATOR	P						
016	01	51886400	9	1		PC	FAN, 50CFM 115V 50/60HZ 1PH	P						
017	01	94375401	0	1		PC	GUARD, FAN 50/60HZ	P						
018	01	77618000	2	1		PC	FLEX DISK DRV, 9406 2-SIDED	V						
019	01	71493064	1	4		PC	FOOT	P						
020	01	91976649	3	4		PC	MSCR PAN PHL M4X40MM	S						
021	01	91975724	5	8		PC	NUT HEXAGON SZ 5MM	S						
022	01	15164911	8	4		PC	MSCR HEX-LK PLN M4X8MM STL ZP	S						
023	01	15164917	5	4		PC	MSCR HEX-LK PLN M5X8MM STL Z	S						

BUILD ARC 440

ASSEMBLY PARTS LIST

PRINT DATE	PAGE	FILE CHANGE NO.
01-06-81	2	14671 ~~00014094~~

DIV.	ASSEMBLY NUMBER	CD	REV.	SUBG.	DESCRIPTION	MC	STATUS	STATUS DATE	ENG. DISP.	FILE DATE
0840	15632574	8	FE	0	FDO, PLATO SLAVE 60HZ (TA)	G	REL	09-03-80	8R810A	01-06-81

TRANS NO	LI	PART NUMBER	CD	QUANTITY		U/M	PART DESCRIPTION	MC	YLD	ECO. NO. IN	ECO. NO. OUT	S/N	WE IN	WE OUT
024	01	91976758	2	5		PC	MSCR PNM M5X10MM	S						
025	01	91976864	8	4		PC	MSCR MACH FLH M5X10MM	S						
026	01	91976652	7	5		PC	MSCR PAN PHL M5X10MM	S						
027	01	91975706	2	5		PC	WASHER LK METRIC M5	S						
028	01	71493078	1	4		PC	STANDOFF HEX METRIC CRS	S						
029	01	51918435	2	1		PC	EMBLEM, CDC ID	P			14328			8044
029	02	66312548	2	1		PC	EMBLEM CDC PLATO	P		14328			8044	
031	01	93109381	9	2		PC	STOFF,NO.1/4 .250L RD ZINC	S						
032	01	91975684	1	6		PC	WSHR METRIC SZ 5 SCREW	S						
033	01	93522018	6	1		PC	PLUG,SNAP BUTTON 1 1/4 DIA HO	P						
034	01	94374960	2		125	PC	STRIP CONTACT	P						
035	01	99040204	1	8		PC	WSHR, NO.10 DISHED LOCK STL	S						
036	01	51885780	5	4		PC	BUMPER SELF STICKING	P						
037	01	62044200	4	1		PC	CLAMP-CABLE ADHESIVE BACK	S						
038	01	94277400	1	1		PC	STRAP, CBL TIE TYP 1 TO 5/8	S			14391			8047
038	02	94277400	1	2		PC	STRAP, CBL TIE TYP 1 TO 5/8	S		14391	14391A		8047	8047
038	03	94277400	1	3		PC	STRAP, CBL TIE TYP 1 TO 5/8	S		14391A			8047	
039	01	71493230	8	1		PC	SHIELD	P		14328			8044	
040	01	94952303	9	1		PC	CORD CLIP	P		14391A			8047	
							0840 TOTAL LINES							

BUILD ARC 440

ASSEMBLY PARTS LIST

PRINT DATE	PAGE	FILE CHANGE NO.
01-06-81	1	1457

DIV.	ASSEMBLY NUMBER	CD	REV.	DWG.	DESCRIPTION	MC	STATUS	STATUS DATE	ENGL. RESP.	FILE DATE
0860	15632575 5	F2		D	FDO, PLATO SLAVE 50HZ (TA)	G	REL	09-03-80	SR8108	01-06-81

TYPING NO	LI	PART NUMBER	CD	MC	QUANTITY	U/M	PART DESCRIPTION	MC	TLB	ECO. NO. IN	ECO. NO. OUT	S/N	WE IN	WE OUT
001	01	61409022	3		1	PC	AC ENTRY, FLEX DISK 50HZ	A						
003	01	90446140	7		1	PC	CD ASSY 98KD PWR SPLY	A						
004	01	90446143	1		1	PC	CD ASSY 98WO BACKPLANE	A						
005	01	71493032	6		1	PC	COVER METAL AL	P						
006	01	71493185	4		1	PC	FACE PLATE	P						
007	01	71493188	6		1	PC	BASE	P						
008	01	71492950	2		2	PC	TRACK DISK MTG	P						
009	01	71492951	3		2	PC	SLIDE DISK MTG	P						
010	01	96837907	3		1	PC	CKT BRKR MAGNETIC 3.0 AMPS	P						
011	01	71492955	1		1	PC	PANEL CABLE SUPPORT	P						
012	01	71492966	8		2	PC	GUIDE CARD	P						
014	01	71492968	4		1	PC	BUTTON SWITCH	P						
015	01	71493054	2		1	PC	PANEL SWITCH INDICATOR	P						
016	01	91886600	9		1	PC	FAN, 50CFM 115V 50/60HZ 1PH	P						
017	01	94375401	0		1	PC	GUARD, FAN 50/60HZ	P						
018	01	77-18000	2		1	PC	FLEX DISK DRV, 9406 2-SIDED	V						
019	01	71493064	1		4	PC	FOOT	P						
020	01	91976649	3		4	PC	MSCR PAN PHL M4X40MM	B						
021	01	91975724	5		8	PC	NUT HEXAGON SZ 5MM	B						
022	01	15164911	8		4	PC	MSCR HEX-LK PLN M4X8MM STL ZP	B						
023	01	15164917	5		4	PC	MSCR HEX-LK PLN M5X8MM STL Z	B						

BUILD ARC 440

ASSEMBLY PARTS LIST

PRINT DATE	PAGE	FILE CHANGE NO.
01-06-81	2	1457

DIV.	ASSEMBLY NUMBER	CD	REV.	DWG.	DESCRIPTION	MC	STATUS	STATUS DATE	ENGL. RESP.	FILE DATE
0860	15632575 5	F2		D	FDO, PLATO SLAVE 50HZ (TA)	G	REL	09-03-80	SR8108	01-06-81

TYPING NO	LI	PART NUMBER	CD	MC	QUANTITY	U/M	PART DESCRIPTION	MC	TLB	ECO. NO. IN	ECO. NO. OUT	S/N	WE IN	WE OUT
024	01	91976758	2		5	PC	MSCR PNM M5X10MM	B						
025	01	91976864	8		4	PC	MSCR MACH FLM M5X10MM	B						
026	01	91976652	7		5	PC	MSCR PAN PHL M5X10MM	B						
027	01	91975706	2		5	PC	WASHER LK METRIC M5	B						
028	01	71493078	1		5	PC	STANDOFF HEX METRIC CRS	B						
029	01	51918435	2		1	PC	EMBLEM, CDC ID	P			14328			8044
029	02	66312548	2		1	PC	EMBLEM CDC PLATO	P		14328			8044	
031	01	93109381	9		2	PC	STOFF,NO.1/4 .250L RD ZINC	B						
032	01	91975684	1		6	PC	WSHR METRIC SZ 5 SCREW	B						
033	01	93522618	6		1	PC	PLUG,SNAP BUTTON 1 1/4 DIA HO	P						
034	01	94374900	2		125	PC	STRIP CONTACT	P						
035	01	09040204	1		8	PC	WSHR, NO.10 DISHED LOCK STL	B						
036	01	51805700	5		4	PC	BUMPER SELF STICKING	P						
037	01	62044200	4		1	PC	CLAMP-CABLE ADHESIVE BACK	B						
038	01	94277400	1		1	PC	STRAP, CBL TIE TYP 1 TO 5/8	B			14391			8047
038	02	94277400	1		2	PC	STRAP, CBL TIE TYP 1 TO 5/8	B		14391	14391A		8047	8047
038	03	94277400	1		3	PC	STRAP, CBL TIE TYP 1 TO 5/8	B		14391A			8047	
039	01	71493230	8		1	PC	SHIELD	P		14328			8044	
040	01	94952303	9		1	PC	CORD CLIP	P		14391A			8047	
							0040 TOTAL LINES							

61409021	60 HZ
61409022	50 HZ

SHEET REVISION STATUS	REV	ECO	DESCRIPTION	DRFT	DATE	CHKD	APP
	A	2-59-74	RELEASED CLASS A		[illegible]		
	B	14321	REVISED PER ECO	[illegible]	11-10-80		

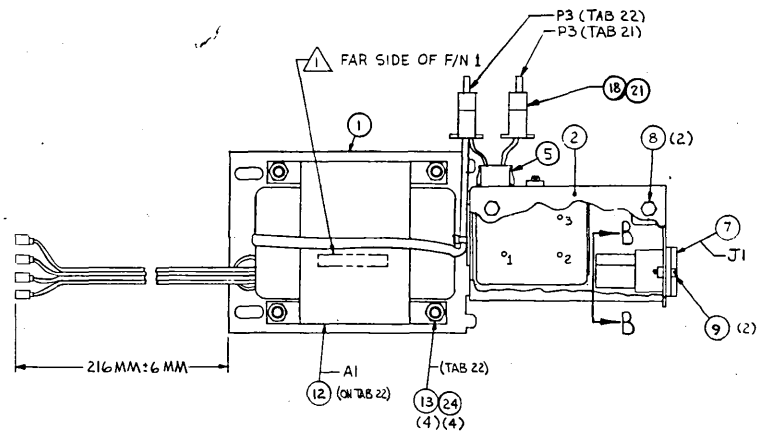

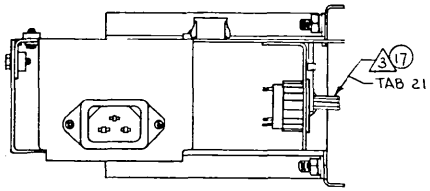

NOTES:

1. MARK "ASSY 6140902X" IN AREA SHOWN PER CDC SPEC 10121508.
2. SECURE PLASTIC NUT USING F/N 23.
3. ON TAB 21, CENTER WIRES AND STRAP AS SHOWN.

SECTION B-B

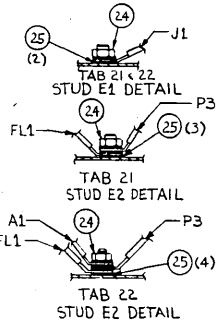

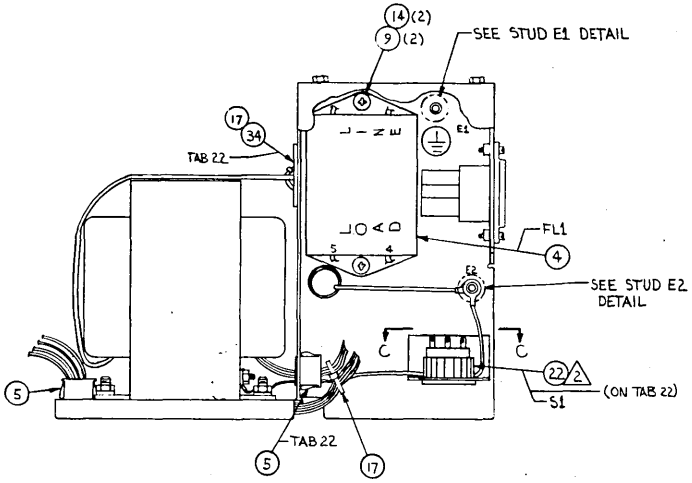

SECTION C-C
TAB 22

METRIC

APL 61409021/22 DETACHED LISTS	UNLESS OTHERWISE SPECIFIED TOLERANCES 3 PLACE ± / 2 PLACE ± / ANGLES ± /	CONTROL DATA	TITLE AC ENTRY ASSY, FLEX DISK
	DO NOT SCALE DRAWING	FIRST USE ON FA501-A/B	CODE IDENT 15920
	MATERIAL	DRAWN BY [illegible] 8-26-80	D
	FINISH	CHECKED BY [illegible] 9-3-80	DRAWING NO 61409021/22
		ENGINEER [illegible] 8-29-80	SCALE 1/1
		DATE [illegible] 9-3-80	NEXT 15632572/75
		APPROVED [illegible] 9-3-80	SHEET / OF /

BUILD ARC 230

ASSEMBLY PARTS LIST

PRINT DATE	PAGE	FILE CHANGE NO.
10-07-80	1	00014321

DIV.	ASSEMBLY NUMBER	CD	REV.	DWG.	DESCRIPTION	MC	STATUS	STATUS DATE	ENG. RESP.	FILE DATE
0860	61409021	5	B	D	AC ENTRY, FLEX DISK 60HZ	A	REL	09-03-80	FA501A	10-07-80

T	FIND NO	LI	PART NUMBER	CD	M	QUANTITY		U/M	PART DESCRIPTION	MC	YLD	ECO. NO. IN	ECO. NO. OUT	S/N	WK IN	WK OUT
	001	01	71492952	8		1		PC	BRACKET SWITCH/FILTER/XFORM	P						
	002	01	71492953	6		1		PC	COVER SWITCH/FILTER	P						
	004	01	15164356	6		1		PC	FILTER RFI	P						
	005	01	15012408	9		2		PC	BSHG, SNAP-IN .500 M/H .38ID	B						
	007	01	44674034	2		1		PC	CONN POWER RECEPT	P						
	008	01	15164917	5		2		PC	MSCR HEX-LK PLN M5X8MM STL Z	B						
	009	01	91976625	3		4		PC	MSCR PAN PHL M3X6MM	B						
	010	01	51809101	2			020	FT	TAPE-WIRE MARKING CHAR 1	B						
	011	01	51809103	8			020	FT	TAPE-WIRE MARKING CHAR 3	B						
	014	01	91975669	2		2		PC	WSHR METRIC SCREW SZ 3	B						
	015	01	44674036	7		3		PC	CONN PWR RECPT	P						
	016	01	51797218	8		3		PC	LUG, NO.10 CRMP-R 22-18AWG	B						
	017	01	94277400	1		1		PC	STRAP, CBL TIE TYP 1 TO 5/8	B						
	018	01	51906200	4		3		PC	CONT, SKT 20-14GA .130IT STR	P						
	019	01	52810001	9		2	833	FT	WIR 18GA STRD BRN 600V UL PVC	W						
	020	01	52810020	9			833	FT	WIR 18GA STRD GRN YEL STRIPE	W						
	021	01	51906001	6		1		PC	CONN, 3 SKT PLUG FIG 1 NYLON	P						
	024	01	91975724	5		2		PC	NUT HEXAGON SZ 5MM	B						
	025	01	91975671	8		6		PC	WASHER EX TOOTH SZ 5	B						
	026	01	61409023	1		REF		PC	W/L AC ENTRY 60HZ	D						
	027	01	52810006	8		2	833	FT	WIR 18GA STRD BLU 600V UL PVC	W						

BUILD ARC 230

ASSEMBLY PARTS LIST

PRINT DATE	PAGE	FILE CHANGE NO.
10-07-80	2	00014321

DIV.	ASSEMBLY NUMBER	CD	REV.	DWG.	DESCRIPTION	MC	STATUS	STATUS DATE	ENG. RESP.	FILE DATE
0860	61409021	5	B	D	AC ENTRY, FLEX DISK 60HZ	A	REL	09-03-80	FA501A	10-07-80

T	FIND NO	LI	PART NUMBER	CD	M	QUANTITY		U/M	PART DESCRIPTION	MC	YLD	ECO. NO. IN	ECO. NO. OUT	S/N	WK IN	WK OUT
	028	01	93083004	7		2		PC	SPLICES 22-16	W						
	029	01	62201057	7		REF		PC	SCH DIAG 50/60HZ	D						
	030	01	95643231	4		4		PC	LUG, Q-CONN 22-18AWG FIG 5	P						
	031	01	51809102	0			020	FT	TAPE-WIRE MARKING CHAR 2	B						
	032	01	51809104	6			020	FT	TAPE-WIRE MARKING CHAR 4	B						
	033	01	24528636	4			333	FT	TBG, NO. 2 INS BLK UL PVC	B						
									0027 TOTAL LINES							

BUILD ARC 230

ASSEMBLY PARTS LIST

PRINT DATE	PAGE	FILE CHANGE NO.
10-07-80	1	00014321

DIV.	ASSEMBLY NUMBER	CD	REV.	DWG.	DESCRIPTION	MC	STATUS	STATUS DATE	ENG. RESP.	FILE DATE
0860	61409022	3	B	D	AC ENTRY, FLEX DISK 50HZ	A	REL	09-03-80	FA501A	10-07-80

T	FIND NO	LI	PART NUMBER	CD	M	QUANTITY		U/M	PART DESCRIPTION	MC	YLD	ECO. NO. IN	ECO. NO. OUT	S/N	WK IN	WK OUT
	001	01	71492952	8		1		PC	BRACKET SWITCH/FILTER/XFORM	P						
	002	01	71492953	6		1		PC	COVER SWITCH/FILTER	P						
	004	01	15164356	6		1		PC	FILTER RFI	P						
	005	01	15012408	9		3		PC	BSHG, SNAP-IN .500 M/H .38ID	B						
	007	01	44674034	2		1		PC	CONN POWER RECEPT	P						
	008	01	15164917	5		2		PC	MSCR HEX-LK PLN M5X8MM STL Z	B						
	009	01	91976625	3		4		PC	MSCR PAN PHL M3X6MM	B						
	010	01	51809101	2			020	FT	TAPE-WIRE MARKING CHAR 1	B						
	011	01	51809103	8			020	FT	TAPE-WIRE MARKING CHAR 3	B						
	012	01	51918789	2		1		PC	XFMR STEP DOWN 220/240V	P						
	013	01	09040204	1		4		PC	WSHR, NO.10 DISHED LOCK STL	B						
	014	01	91975669	2		2		PC	WSHR METRIC SCREW SZ 3	B						
	015	01	44674036	7		3		PC	CONN PWR RECPT	P						
	016	01	51797218	8		2		PC	LUG, NO.10 CRMP-R 22-18AWG	B						
	017	01	94277400	1		1		PC	STRAP, CBL TIE TYP 1 TO 5/8	B			14321			8041
	017	02	94277400	1		2		PC	STRAP, CBL TIE TYP 1 TO 5/8	B		14321			8041	
	019	01	52810001	9		2		FT	WIR 18GA STRD BRN 600V UL PVC	W						
	020	01	52810020	9			250	FT	WIR 18GA STRD GRN YEL STRIPE	W						
	022	01	51918969	0		1		PC	SWITCH VOLTAGE SELECTOR	P						
	023	01	51873600	4			001	OZ	VARNISH INSUL RED GLPT	B						
	024	01	91975724	5		6		PC	NUT HEXAGON SZ 5MM	B						

BUILD ARC 230

ASSEMBLY PARTS LIST

PRINT DATE	PAGE	FILE CHANGE NO.
10-07-80	2	00014321

DIV.	ASSEMBLY NUMBER	CD	REV.	DWG.	DESCRIPTION	MC	STATUS	STATUS DATE	ENG. RESP.	FILE DATE
0860	61409022	3	B	D	AC ENTRY, FLEX DISK 50HZ	A	REL	09-03-80	FA501A	10-07-80

T	FIND NO	LI	PART NUMBER	CD	M	QUANTITY		U/M	PART DESCRIPTION	MC	YLD	ECO. NO. IN	ECO. NO. OUT	S/N	WK IN	WK OUT
	025	01	91975671	8		6		PC	WASHER EX TOOTH SZ 5	B						
	026	01	61409024	9		REF		PC	W/L AC ENTRY 50HZ	D						
	027	01	52810006	8		1	166	FT	WIR 18GA STRD BLU 600V UL PVC	W						
	028	01	93083004	7		2		PC	SPLICES 22-16	W						
	029	01	51758101	3			188	FT	INS SLV CLR PVC HEAT SHRINK	B						
	030	01	95643231	4		4		PC	LUG, Q-CONN 22-18AWG FIG 5	P						
	031	01	62201057	7		REF		PC	SCH DIAG 50/60HZ	D						
	032	01	51809102	0			020	FT	TAPE-WIRE MARKING CHAR 2	B						
	033	01	51809104	6			020	FT	TAPE-WIRE MARKING CHAR 4	B						
	034	01	62044200	4		1		PC	CLAMP-CABLE ADHESIVE BACK	B						
									0031 TOTAL LINES							

COMMON PARTS DATA APPLICABLE TO BOTH PRE-PRODUCTION AND PRODUCTION UNITS

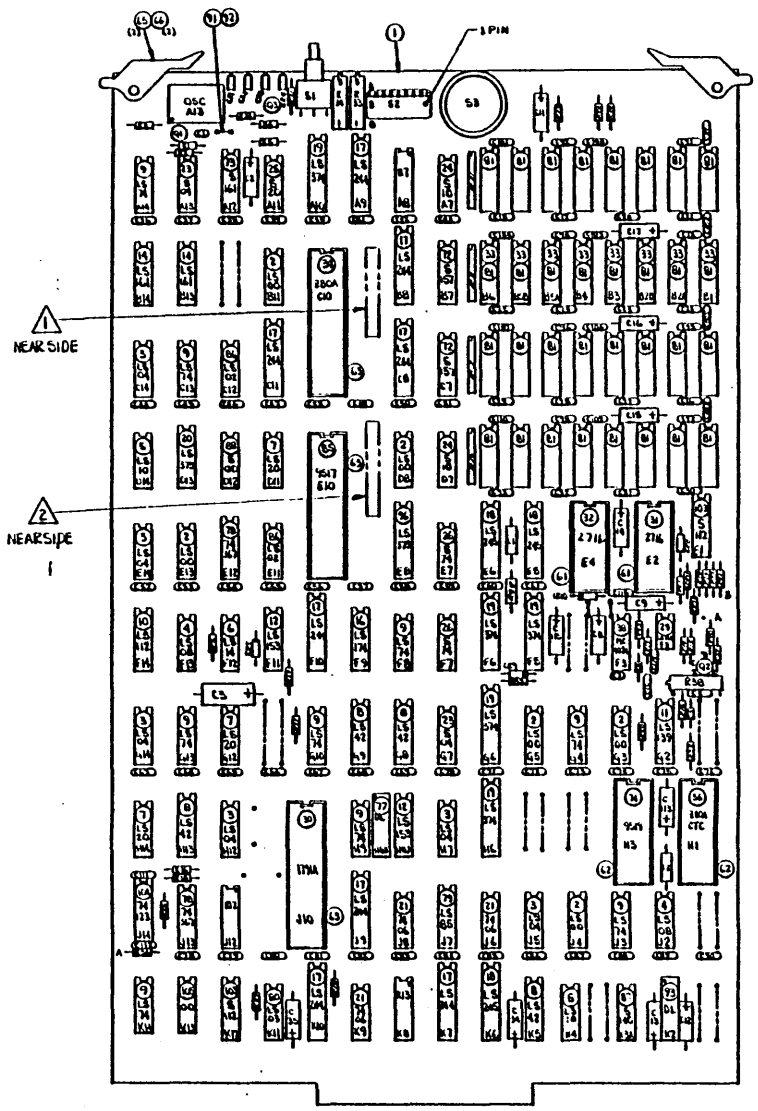

CROSS REFERENCE TABLE	
FIND NUMBER	REFERENCE DESIGNATION
37	OSC
39	S2
41	R3
42	R2,R4
44	R1
47	R5,R6
48	R13
51	C36 THRU C61 C63 THRU C76 C78 THRU C98,C114
53	C8,C9,C12,C13,C34,C35
54	C11, C14,C15,C16,C17,C113,C115
55	C3
56	C1
57	CR1 CR2 CR3 CR4
58	CR5 CR9,CR10,CR11
59	Q1,Q3
60	S1
69	C2
70	R8,R9,R10,R11
71	S3
75	C18 THRU C33 C99 THRU C110
82	R7,R12
83	R41
90	R19,R19,R21,R23,R25,R26,R27,R46
97	R20
102	C7
106	R33
107	R34
108	R38
110	Q2
111	R16,R17
112	R14,R15
113	R35,R36
114	R28,R29
115	R30,R37
116	R39,R40
117	R43
118	R32
119	R31
120	R42
121	R44
122	C116
124	CR8
125	C5,C6
126	C4,C10
127	C112
129	C111
130	L1,L2
131	R22,R24
132	CR7

NOTES:

1. MARK ASSY. NO., REV LEVEL, AND LOC CODE IN AREA SHOWN. MARK PER CDC SPEC 10121508. CHARACTER HEIGHT .12 (10 PT) COLOR WHITE.
2. MARK SERIAL NUMBER IN AREA SHOWN PER RVLOPS P&P NO. 80:20:34 AND PER MARKING REQUIREMENTS IN NOTE (1) ONE.
3. FIND NUMBERS, ELEMENT IDENTIFIERS, AND REFERENCE DESIGNATIONS ARE FOR REFERENCE ONLY AND DO NOT APPEAR ON PART.
4. AFTER ALIGNING R33, R34 AND R38, SEAL THEM WITH GLYPTAL CDC P/N 51873000.

CHANGE TABLE	
DELETIONS	ADDITIONS
CUT FOIL:	ADD WIRE SOLDER SIDE
1) K3 B-4 S.S.	1) K4-11 TO K3A-13
2) R42-B S.S.	2) R42 B TO R40-A
3) R35-1 S.S.	3) R40-A TO F2-5
4) R36-A S.S.	4) R38-2 TO F2-6
	5) F2-7 TO Q2-B
	6) ADD CENTER CONDUCTOR COAX FROM R33-2 TO R36-A
	7) ADD BRAID SHIELD COAX FROM S2-8A TO J14-B

INACTIVE

REVISION RECORD						
REV	ECO	DESCRIPTION	ANAL	DATE	CHKD	APD
G7	51243	REPLACED "A" SIZE ASSY DWG WITH "D" SIZE PER ECO	WAH	11-9-80	WHL	[illegible]
08	51246	REVISED PER ECO	WAH	12-8-80	WHL	[illegible]
09	51253	CHG PAT 94 SCHEMATIC	WAH	2-6-80	WHL	[illegible]
A	10489	RELEASED CLASS A	—	[illegible]	—	[illegible]
B	10469	P/L CHANGE ONLY	LC	[illegible]	LC	[illegible]
C	10516	ADD NOTE 4 & CHG 152	WAC	6-30-80	WHL	[illegible]
D	10871	INACTIVE [illegible]	WAC	12-81	WHL	[illegible]

APL 90446260	DETACHED LISTS	CONTROL DATA	P.C. CARD ASSEMBLY, 9BED (DISK CONTROLLER)
		FA50IA	
		W CLASER 11-80	
		D SAND 11-80	
		L WAMPLER 11-80	
		15920	D 90446260
		SCALE 2/1	SHEET 1 OF 1

BUILD ARC 214

ASSEMBLY PARTS LIST

PRINT DATE	PAGE	FILE CHANGE NO.
02-05-81	1	14971

DIV	ASSEMBLY NUMBER	CD	REV.	DWG.	DESCRIPTION	MC	STATUS	STATUS DATE	ENG. REP.	FILE DATE
0860	90446260	3	D8	0	PW BD ASSY 98ED REPLACED BY 90446284	S	~~DEL~~ INA	12-17-80	FA501A	02-05-81

T PNO NO.	U	PART NUMBER	CD	QUANTITY	U/M	PART DESCRIPTION	MC	TUB	SCD. NO. IN	SCD. NO. OUT	S/N	WE IN	WE OUT
001	01	90446259	5	1	PC	PW BD 98ED	P						
002	01	15144900	6	6	PC	IC 74LS00 140LS QUAD 2-INP	P						
003	01	15145100	2	6	PC	IC 74LS04 146LS TTL HEX INV	P						
004	01	15145400	6	2	PC	IC 74LS08 201LS QZINP AND	P						
005	01	15145600	1	2	PC	IC 74LS10 141LS TTL 3I/P NAND	P						
006	01	15146500	0	1	PC	IC 74LS14 943LS TTL 6 NO RCVR	P						
007	01	15145900	5	3	PC	IC 74LS20 208LS TTL 4I/P NAND	P						
008	01	15147600	9	4	PC	IC TYPE 74LS42	P						
009	01	15146300	7	9	PC	IC 74LS74 175LS F/F DUAL D	P						
010	01	15146500	2	1	PC	IC 74LS112 243LS TTL DUAL F/F	P						
011	01	15146600	0	1	PC	IC 74LS139 538LS DECODER 10F4	P						
012	01	15148700	6	2	PC	IC 74LS153 TTL DUAL 4I/P	P						
014	01	15146800	6	2	PC	IC 74LS161 158LS 4BIT COUNTER	P						
016	01	15147500	1	1	PC	IC 74LS174 TTL 6 BIT 16 PIN	P						
017	01	15163414	4	8	PC	IC 74LS244 OCTAL BFR 3-S OP	P						
018	01	15163324	5	3	PC	IC 74LS245 OCTAL BUS XCEIVER	P						
019	01	15163404	5	5	PC	IC 74LS374 OCTAL D-EDGE F-F	P						
020	01	15163232	0	1	PC	IC 74LS375 TTL 4-BIT	P						
021	01	96744155	1	3	PC	IC 7406 DRVR HEX INV BUFFER	P						
023	01	88883700	2	2	PC	IC 74S04 146S TTL HEX INVTR	P						
024	01	88884200	2	2	PC	IC 74S10 141S TTL 3 3-IN NAND	P						

BUILD ARC 214

ASSEMBLY PARTS LIST

PRINT DATE	PAGE	FILE CHANGE NO.
02-05-81	2	14971

DIV	ASSEMBLY NUMBER	CD	REV.	DWG.	DESCRIPTION	MC	STATUS	STATUS DATE	ENG. REP.	FILE DATE
0860	90446260	3	D8	0	PW BD ASSY 98ED REPLACED BY 90446284	S	~~DEL~~ INA	12-17-80	FA501A	02-05-81

T PNO NO.	U	PART NUMBER	CD	QUANTITY	U/M	PART DESCRIPTION	MC	TUB	SCD. NO. IN	SCD. NO. OUT	S/N	WE IN	WE OUT
025	01	88885300	9	1	PC	IC 74S20 TTL DUAL 4 I/P	P						
026	01	88923000	9	2	PC	I C 74S74 TTL DUAL	P						
029	01	15157100	7	1	PC	IC LM358N 344 DUAL OP-AMP	P						
030	01	15163444	1	1	PC	IC FD1791	P						
031	01	66312068	1	1	PC	FLEXIBLE DISK CODED E-ROM	G						
032	01	66312069	9	1	PC	FLEXIBLE DISK CODED E-ROM	G						
033	01	15153821	2	8	PC	IC 4116 MOS 16384-BIT RAM	P						
034	01	15163201	5	1	PC	IC Z80A MOS 8BIT ARCCESSOR	P						
036	01	15164429	1	1	PC	IC Z80A-CTC SILICON GATE NMOS	P						
037	01	51904109	9	1	PC	OSCILLATOR TTL D I P	P						
038	01	15105700	7	1	PC	IC 4024 582 TTL DL/V CONT MVB	P						
039	01	83452230	2	1	PC	SWITCH DUAL 8POS .88 FIG 2	P						
041	01	94402116	1	1	PC	RES FM 22 OHM 1/4W CARBON	P						
042	01	94402140	1	2	PC	RES FM 220 OHM 1/4W CARBON	P						
044	01	94402157	5	1	PC	RES FM 1.1K OHM 1/4W CARBON	P						
047	01	94402180	7	2	PC	RES FM 10K OHM 1/4W CARBON	P						
048	01	95894500	8	1	PC	RES MOD 16 PINS 28 RESISTORS	P						
051	01	51001120	8	62	PC	CAP CER F-2 .01UF +80-20P 25V	P						
053	01	24504333	6	6	PC	CAP FXD TANT 2.2UF 20P 35VDCW	P						
054	01	24504369	0	7	PC	CAP FXD TANT 10UF 20P 15VDCW	P						
055	01	24504373	2	1	PC	CAP FXD TANT 47UF 20P 15VDCW	P						

BUILD ARC 214

ASSEMBLY PARTS LIST

PRINT DATE	PAGE	FILE CHANGES NO.
02-05-81	3	14571

DIV	ASSEMBLY NUMBER	CD.	REV.	PARA.	DESCRIPTION	MC	STATUS	STATUS DATE	ENG. REP.	FILE DATE
0860	90446260	3	DE	0	PW BD ASSY 98ED REPLACED BY 90446284	S	PCNA	12-17-80	FA501A	02-05-81

T FIND NO.	LI	PART NUMBER	CD INV	QUANTITY	U/M	PART DESCRIPTION	MC	YLD	SCH. NO. IN	SCH. NO. OUT	S/N	WK IN	WK OUT
056	01	75887677	5	1	PC	CAP CER 33PF 5P	P						
057	01	19171201	7	4	PC	LIGHT IND	P						
058	01	51007385	1	4	PC	DIO IN4148 10MA MICRO SIL 30V	P						
059	01	51714000	0	2	PC	XSTR 2N2907 PNP SIL	P						
060	01	51940524	5	1	PC	SWITCH PUSH BUTTON RT ANGLE	P						
061	01	51848404	3	2	PC	SOCKET, IC 24 POS D-I-L TIN	P						
062	01	51848405	0	2	PC	SOCKET, IC 28 POS D-I-L TIN	P						
063	01	51848406	8	3	PC	SOCKET, IC 40 POS D-I-L TIN	P						
065	01	82311900	3	2	PC	INJECTOR-EJECTOR, NATURAL PCB	P						
066	01	93533118	1	2	PC	ROLLPIN, .1250 X .250L STL ZP	B						
069	01	24504320	3	1	PC	CAP TANT 60CWV 33UF 20P	P						
070	01	94375122	2	4	PC	RES 8SIP NTWK 470HM 3P	P						
071	01	94789205	5	1	PC	SWITCH ROTARY PC 10 POS	P						
072	01	15117400	0	2	PC	IC TTL 8MUX 2-1 A 1895 DIC16	P						
073	01	15150400	8	1	PC	IC 93516 TTL 48IT	P						
074	01	15163459	9	1	PC	IC 9519 INT CONT	P						
075	01	94354826	3	28	PC	CAP FXD CER 0.10UF 50V	P						
077	01	51918283	6	1	PC	DELAY LINE TAP 100 OHM FIG 5	P						
078	01	15140400	1	2	PC	IC OM 8097 HEX BUFFER TRI STA	P						
079	01	15147200	8	1	PC	IC 74LS85 COMP TTL 4 BIT	P						
080	01	15145200	0	1	PC	IC 74LS03 202LS TTL4 2-I NAND	P						

BUILD ARC 214

ASSEMBLY PARTS LIST

PRINT DATE	PAGE	FILE CHANGES NO.
02-05-81	4	14571

DIV	ASSEMBLY NUMBER	CD.	REV.	PARA.	DESCRIPTION	MC	STATUS	STATUS DATE	ENG. REP.	FILE DATE
0860	90446260	3	DE	0	PW BD ASSY 98ED REPLACED BY 90446284	S	PCNA	12-17-80	FA501A	02-05-81

T FIND NO.	LI	PART NUMBER	CD INV	QUANTITY	U/M	PART DESCRIPTION	MC	YLD	SCH. NO. IN	SCH. NO. OUT	S/N	WK IN	WK OUT
081	01	51848401	9	32	PC	SOCKET, IC 16 POS D-I-L TIN	P						
082	01	75738666	9	2	PC	RES PAK 10.0K OHM 1.50W FIG 2	P						
083	01	94402141	9	1	PC	RES FM 240 OHM 1/4W CARBON	P						
085	01	15163458	1	1	PC	IC 9517A MULTIMODE DMA CONT	P						
086	01	15145000	4	2	PC	IC 74LS02 148LS Q2INP NOR	P						
087	01	15158700	3	1	PC	IC T74S140 TTL DUAL 4 I/P GAT	P						
088	01	88884500	5	1	PC	IC 74S00 140S TTL QD 2IN NAND	P						
090	01	94402156	7	8	PC	RES FM 1K OHM 1/4W CARBON	P						
091	01	51903400	3	2	PC	PIN, .025 IN SQ PC MTG 2A	P						
092	01	77612624	5	1	PC	CONNECTOR, JUMPER	P						
093	01	51918281	0	1	PC	DELAY LINE TAP 200 OHM FIG 3	P						
094	01	90446122	5	REF	PC	SCH DIAG 98ED	D			14469			8103
094	02	90446258	7	REF	PC	SCH DIAG 98ED	D		14469			8103	
095	01	16033200	3	REF	PC	FABRICATION SPEC 70 PAK	D						
096	01	15163434	2	1	PC	IC 74LS373 OCTAL D LATCH	P						
097	01	94402168	2	1	PC	RES FM 3.3K OHM 1/4W CARBON	P						
102	01	94227227	9	1	PC	CAP 110 PF DIPPED MICA	P						
103	01	15158600	5	2	PC	IC 74S112 TTL DUAL J-K NET	P						
104	01	50254300	2	1	PC	IC 74123 193 TTL 2 RETGR MVB	P						
105	01	66299099	3	1	PC	IC 7400 TTL QUAD 2-IN NAND	P						
106	01	51908710	0	1	PC	RES CERM VAR 20K OHM 10P 3/4W	P						

BUILD ARC 214

ASSEMBLY PARTS LIST

PRINT DATE	PAGE	FILE CHANGE NO.
02-05-81	5	14571

DIV	ASSEMBLY NUMBER	CD.	REV.	SUBG.	DESCRIPTION	MC	STATUS	STATUS DATE	ENG. ASSP.	FILE DATE
0860	90446260	3	D	0	PW BD ASSY 98ED REPLACED BY 90446284	S	REL	12-17-80	FA501A	02-05-81

T	FIND NO.	U	PART NUMBER	CD	QUANTITY		U/M	PART DESCRIPTION	MC	YLD	SCD. NO. IN	SCD. NO. OUT	S/N	WE IN	WE OUT
	107	01	51908709	2	1		PC	RES VAR 10K OHM	P						
	108	01	51908708	4	1		PC	RES CER VAR 5K OHM 10P 3/4W	P						
	110	01	51003092	7	1		PC	XSTR 2N2222 HI SPEED NPN SIL	P						
	111	01	94360304	3	2		PC	RES 1100 OHMS 1/4W 1P	P						
	112	01	94360352	2	2		PC	RES 3480 OHMS 1/4W 1P	P						
	113	01	94402173	2	2		PC	RES FM 5.1K OHM 1/4W CARBON	P						
	114	01	94402164	1	2		PC	RES FM 2.2K OHM 1/4W CARBON	P						
	115	01	94360400	9	2		PC	RES FXD FM 10.0K OHM 1P 1/4W	P						
	116	01	94402166	6	2		PC	RES FM 2.7K OHM 1/4W CARBON	P						
	117	01	94402158	3	1		PC	RES FM 1.2KOHM 1/4W CARBON	P						
	118	01	94402154	2	1		PC	RES FM 820 OHM 1/4W CARBON	P						
	119	01	94402139	3	1		PC	RES FM 200 OHM 1/4W CARBON	P						
	120	01	94402161	7	1		PC	RES FM 1.6K OHM 1/4W CARBON	P						
	121	01	24500144	1	1		PC	RES FXD COMP 160 OHMS 1/2W 5P	P						
	122	01	94842154	0	1		PC	CAP FXD CER .001UF 10P 1000V	P						
	124	01	15101109	5	1		PC	DIO 1N752A 400MW ZEN VR 5.6V	P						
	125	01	94227253	5	2		PC	CAP 1300 PF DIPPED MICA	P						
	126	01	94354824	8	2		PC	CAP CER 0.047 UF TYPE 1 20P	P						
	127	01	94240423	7	1		PC	CAP CER 150PF 50V 10P	P						
	129	01	94240421	1	1		PC	CAP CER 82 PF 50V	P						
	130	01	94356324	7	2		PC	INDUCTOR 10 MH	P						

BUILD ARC 214

ASSEMBLY PARTS LIST

PRINT DATE	PAGE	FILE CHANGE NO.
02-05-81	6	14571

DIV	ASSEMBLY NUMBER	CD.	REV.	SUBG.	DESCRIPTION	MC	STATUS	STATUS DATE	ENG. ASSP.	FILE DATE
0860	90446260	3	D	0	PW BD ASSY 98ED REPLACED BY 90446284	S	REL	12-17-80	FA501A	02-05-81

T	FIND NO.	U	PART NUMBER	CD	QUANTITY		U/M	PART DESCRIPTION	MC	YLD	SCD. NO. IN	SCD. NO. OUT	S/N	WE IN	WE OUT
	131	01	94402148	4	2		PC	RES FM 470 OHM 1/4W CARBON	P						
	132	01	15101108	7	1		PC	DIO 1N751A 400MW ZEN VR 5.1V	P						
	133	01	51850400	6	1	083	FT	CABLE RAD/FRQ 26GA STRD RG	W						
	135	01	51873600	4		015	OZ	VARNISH INSUL RED GLPT	B		14514			8105	
								0109 TOTAL LINES							

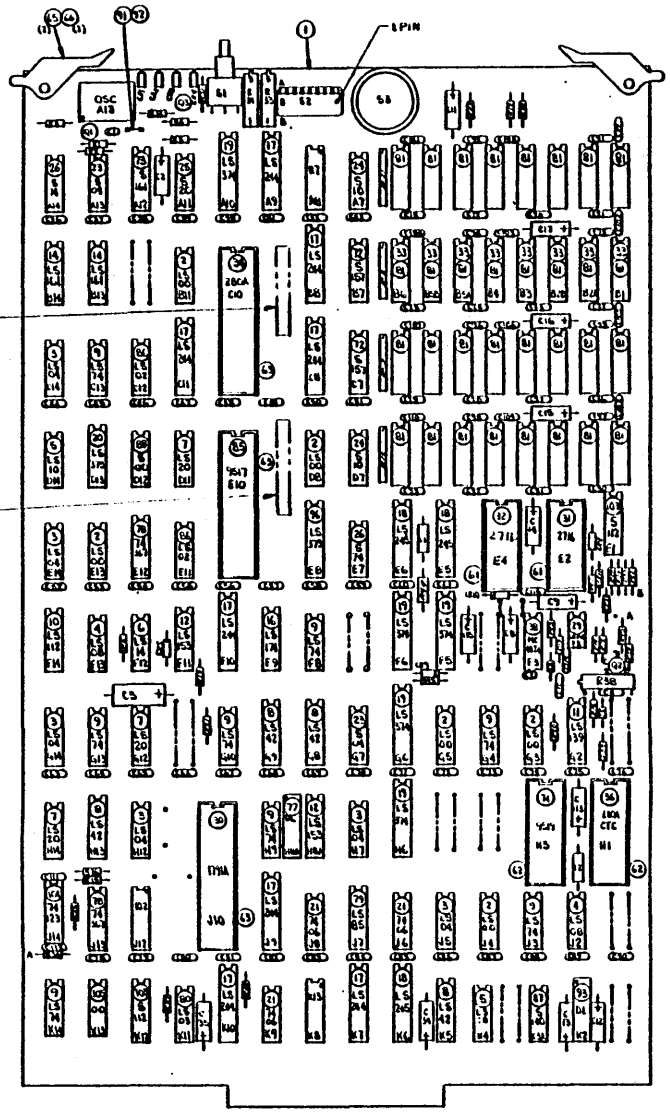

CROSS REFERENCE TABLE	
FIND NUMBER	REFERENCE DESIGNATION
37	OSC
39	S2
41	R3
42	R2,R4
44	R1
47	R5,R6
48	R13
51	C36 THRU C61 C63 THRU C76 C78 THRU C98,C114
53	C8,C9,C12,C13,C34,C35
54	C11, C14,C15,C16,C17,C113,C115
55	C3
56	C1
57	CR1 CR2 CR3 CR4
58	CR5 CR9,CR10,CR11
59	Q1,Q3
60	S1
67	C2
70	R8,R9,R10,R11
71	S3
75	C18 THRU C33 C99 THRU C110
82	R7,R12
83	R11
90	R18,R19,R21,R23,R25,R26,R27,R28
97	R20
102	C7
106	R33
107	R34
108	R38
110	Q2
111	R16,R17
112	R14,R15
113	R35,R36
114	R28,R29
115	R30,R37
116	R39,R40
117	R43
118	R32
119	R31
120	R42
121	R44
122	C116
124	CR8
125	C5,C6
126	C4,C10
127	C112
129	C111
130	L1,L2
131	R22,R24
132	CR7

NOTES:

1. MARK ASSY NO., AND REV LEVEL .12 HIGH, WHITE IN AREA SHOWN PER CDC SPEC 10121508.
2. MARK SERIAL NUMBER IN AREA SHOWN PER RVLOPS P&P NO. 80:20:34 AND PER MARKING REQUIREMENTS IN NOTE (1) ONE.
3. FIND NUMBERS, ELEMENT IDENTIFIERS, AND REFERENCE DESIGNATIONS ARE FOR REFERENCE ONLY AND DO NOT APPEAR ON PART.
4. AFTER ALIGNING R33, R34 AND R38, SEAL THEM WITH GLYPTAL CDC P/N 51873L00.

CHANGE TABLE	
DELETIONS	ADDITIONS
CUT FOIL:	ADD WIRE SOLDER SIDE
1) K3 B-4 S.S.	1) K4-11 TO K3A-13
2) R42-B S.S.	2) R42 B TO R40-A
3) R33-1 S.S.	3) R40-A TO F2-5
4) R36-A S.S.	4) R38-2 TO F2-6
	5) F2-7 TO Q2-B
	6) ADD CENTER CONDUCTOR COAX FROM R33-2 TO R36-A
	7) ADD BRAID SHIELD COAX FROM S2-6A TO J14-B

REVISION RECORD					
REV	ECO	DESCRIPTION	DRAWN	DATE	CHKD	APD
A	12487-83	RELEASED CLASS "A"				

90446284

APL 90446280

DO NOT SCALE DRAWING

CONTROL DATA

FA501A

TITLE: P.C. CARD ASSEMBLY, 9BED (DISK CONTROLLER)

CODE IDENT 15920 D 90446284

SCALE 2/1

BUILD ARC 214

ASSEMBLY PARTS LIST

PRINT DATE	PAGE	FILE CHANGE NO.
2-26-81	1	13489-03

DIV	ASSEMBLY NUMBER	CD.	REV.	DWG.	DESCRIPTION	MC	STATUS	STATUS DATE	ENG. REP.	FILE DATE
0860	90446284	3	A	D	PW BD ASSY 9HED	S	REL	2-26-81	FA501A	2-26-81

ITEM NO.	U	PART NUMBER	CD	QUANTITY	U/M	PART DESCRIPTION	MC	TLB	SCD. NO. IN	SCD. NO. OUT	S/N	WE IN	WE OUT
001	01	90446259	5	1	PC	PW BD 9BED	P						
002	01	15144900	5	6	PC	IC 74LS00 140LS QUAD 2-INP	P						
003	01	15145100	2	6	PC	IC 74LS04 146LS TTL HEX INV	P						
004	01	15145400	6	2	PC	IC 74LS08 201LS Q2INP AND	P						
005	01	15145600	1	2	PC	IC 74LS10 141LS TTL 3I/P NAND	P						
006	01	15148500	0	1	PC	IC 74LS14 943LS TTL 6 ND RCVR	P						
007	01	15145900	5	3	PC	IC 74LS20 200LS TTL 4I/P NAND	P						
008	01	15147600	9	4	PC	IC TYPE 74LS42	P						
009	01	15146300	7	8	PC	IC 74LS74 175LS F/F DUAL D	P						
010	01	15146500	2	1	PC	IC 74LS112 243LS TTL DUAL F/F	P						
011	01	15146600	0	1	PC	IC 74LS139 538LS DECODER 10F4	P						
012	01	15148700	6	2	PC	IC 74LS153 TTL DUAL 4I/P	P						
014	01	15146800	6	2	PC	IC 74LS161 158LS 4BIT COUNTER	P						
016	01	15147500	1	1	PC	IC 74LS174 TTL 6 BIT 16 PIN	P						
017	01	15163414	4	8	PC	IC 74LS244 OCTAL BFR 3-S OP	P						
018	01	15163324	5	3	PC	IC 74LS245 OCTAL BUS XCEIVER	P						
019	01	15163404	5	5	PC	IC 74LS374 OCTAL D-EDGE F-F	P						
020	01	15163232	1	1	PC	IC 74LS375 TTL 4-BIT	P						
021	01	96744155	1	3	PC	IC 7406 DRVR HEX INV BUFFER	P						
023	01	88883700	2	2	PC	IC 74S04 1465 TTL HEX INVTR	P						
024	01	88886200	2	2	PC	IC 74S10 141S TTL 3 3-IN NAND	P						

BUILD ARC 214

ASSEMBLY PARTS LIST

PRINT DATE	PAGE	FILE CHANGE NO.
2-26-81	2	13489-03

DIV	ASSEMBLY NUMBER	CD.	REV.	DWG.	DESCRIPTION	MC	STATUS	STATUS DATE	ENG. REP.	FILE DATE
0860	90446284	3	A	D	PW BD ASSY 9HED	S	REL	2-26-81	FA501A	2-26-81

ITEM NO.	U	PART NUMBER	CD	QUANTITY	U/M	PART DESCRIPTION	MC	TLB	SCD. NO. IN	SCD. NO. OUT	S/N	WE IN	WE OUT
025	01	88885300	9	1	PC	IC 74S20 TTL DUAL 4 I/P	P						
026	01	88923600	9	2	PC	I C 74S74 TTL DUAL	P						
029	01	15157100	7	1	PC	IC LM358N 344 DUAL OP-AMP	P						
030	01	15163444	1	1	PC	IC FD1791	P						
031	01	66312070		1	PC	FLEXIBLE DISK CODED E-ROM	G						
032	01	66312071		1	PC	FLEXIBLE DISK CODED E-ROM	G						
033	01	15153821	2	8	PC	IC 4116 MOS 16384-BIT RAM	P						
034	01	15163201	5	1	PC	IC Z80A MOS 8BIT PROCESSOR	P						
036	01	15164429	1	1	PC	IC Z80A-CTC SILICON GATE NMOS	P						
037	01	51904109	9	1	PC	OSCILLATOR TTL D I P	P						
038	01	15105700	7	1	PC	IC 4024 587 TTL DL/V CONT MVB	P						
039	01	83452230	2	1	PC	SWITCH DUAL SPOS .88 FIG 2	P						
041	01	94402116	1	1	PC	RES FM 22 OHM 1/4W CARBON	P						
042	01	94402140	1	2	PC	RES FM 220 OHM 1/4W CARBON	P						
044	01	94402137	5	1	PC	RES FM 1.1K OHM 1/4W CARBON	P						
047	01	94402180	7	2	PC	RES FM 10K OHM 1/4W CARBON	P						
048	01	95894500	8	1	PC	RES MOD 16 PINS 28 RESISTORS	P						
051	01	51001120	8	62	PC	CAP CER F-2 .01UF +80-20P 25V	P						
053	01	24504333	5	6	PC	CAP FXD TANT 2.2UF 20P 35VDCW	P						
054	01	24504369	1	7	PC	CAP FXD TANT 10UF 20P 15VDCW	P						
055	01	24504373	2	1	PC	CAP FXD TANT 47UF 20P 15VDCW	P						

BUILD ARC 214

ASSEMBLY PARTS LIST

PRINT DATE	PAGE	FILE CHANGE NO.
2-26-81	3	13489-43

DIV	ASSEMBLY NUMBER	CD.	REV.	DWG.	DESCRIPTION	MC	STATUS	STATUS DATE	ENG. REP.	FILE DATE
0860	90446284	3	A	0	PW BD ASSY 9RED	S	REL	2-26-81	FA501A	2-26-81

T FIND NO.	U	PART NUMBER	CD	MC	QUANTITY		U/M	PART DESCRIPTION	MC	YLD	SCD. NO. IN	SCD. NO. OUT	S/N	WE IN	WE OUT
056	01	75887677	5		1		PC	CAP CER 33PF 5P	P						
057	01	19171281	7		4		PC	LIGHT IND	P						
058	01	51007385	1		4		PC	DIO IN4148 10MA MICRO SIL 30V	P						
059	01	51714000	0		2		PC	XSTR 2N2907 PNP SIL	P						
060	01	51940524	5		1		PC	SWITCH PUSH BUTTON RT ANGLE	P						
061	01	51848404	3		2		PC	SOCKET, IC 24 POS D-I-L TIN	P						
062	01	51848405	9		2		PC	SOCKET, IC 28 POS D-I-L TIN	P						
063	01	51848406	8		3		PC	SOCKET, IC 40 POS D-I-L TIN	P						
065	01	82311900	3		2		PC	INJECTOR-EJECTOR, NATURAL PCB	P						
066	01	93533118	1		2		PC	ROLLPIN, .1250 X .250L STL ZP	B						
069	01	24504320	3		1		PC	CAP TANT 60CWV 33UF 20P	P						
070	01	94375122	2		4		PC	RES 8SIP NTWK 470HM 3P	P						
071	01	94789205	5		1		PC	SWITCH ROTARY PC 10 POS	P						
072	01	15117400	0		2		PC	IC TTL 8MUX 2-1 A 1895 DIC16	P						
073	01	15150400	0		1		PC	IC 93S16 TTL 4BIT	P						
074	01	15163459	9		1		PC	IC 9519 INT CONT	P						
075	01	94354826	3		28		PC	CAP FXD CER 0.10UF 50V	P						
077	01	51918283	6		1		PC	DELAY LINE TAP 100 OHM FIG 5	P						
078	01	15140400	1		2		PC	IC DM 8097 HEX BUFFER TRI STA	P						
079	01	15147200	0		1		PC	IC 74LS85 COMP TTL 4 BIT	P						
080	01	15145200	0		1		PC	IC 74LS03 20?LS TTL4 2-I NAND	P						

BUILD ARC 214

ASSEMBLY PARTS LIST

PRINT DATE	PAGE	FILE CHANGE NO.
2-26-81	4	13489-43

DIV	ASSEMBLY NUMBER	CD.	REV.	DWG.	DESCRIPTION	MC	STATUS	STATUS DATE	ENG. REP.	FILE DATE
0860	90446284	3	A	0	PW BD ASSY 9RED	S	REL	2-26-81	FA501A	2-26-81

T FIND NO.	U	PART NUMBER	CD	MC	QUANTITY		U/M	PART DESCRIPTION	MC	YLD	SCD. NO. IN	SCD. NO. OUT	S/N	WE IN	WE OUT
081	01	51848401	9		32		PC	SOCKET, IC 16 POS D-I-L TIN	P						
082	01	75738666	9		2		PC	RES PAK 10.0K OHM 1.50W FIG 2	P						
083	01	94402141	9		1		PC	RES FM 240 OHM 1/4W CARBON	P						
085	01	15163458	1		1		PC	IC 9517A MULTIMODE DMA CONT	P						
086	01	15145000	4		2		PC	IC 74LS02 14BLS Q2INP NOR	P						
087	01	15158700	3		1		PC	IC T74S140 TTL DUAL 4 I/P GAT	P						
088	01	88884500	5		1		PC	IC 74S00 140S TTL QD 2IN NAND	P						
090	01	94402156	7		8		PC	RES FM 1K OHM 1/4W CARBON	P						
091	01	51903400	3		2		PC	PIN, .025 IN SQ PC MTG 2A	P						
092	01	77612624	5		1		PC	CONNECTOR, JUMPER	P						
093	01	51918281	6		1		PC	DELAY LINE TAP 200 OHM FIG 3	P						
094	01	90446258	7		REF		PC	SCH DIAG 9RED	D						
095	01	16033200	3		REF		PC	FABRICATION SPEC TO PAK	D						
096	01	15163434	2		1		PC	IC 74LS373 OCTAL D LATCH	P						
097	01	94402168	2		1		PC	RES FM 3.3K OHM 1/4W CARBON	P						
102	01	94227227	9		1		PC	CAP 110 PF DIPPED MICA	P						
103	01	15158000	5		2		PC	IC 74S112 TTL DUAL J-K NET	P						
104	01	50254300	2		1		PC	IC 74123 193 TTL 2 RETGR MVB	P						
105	01	66299099	3		1		PC	IC 7400 TTL QUAD 2-IN NAND	P						
106	01	51908710	0		1		PC	RES CERM VAR 20K OHM 10P 3/4W	P						

BUILD ARC 214

ASSEMBLY PARTS LIST

PRINT DATE	PAGE	FILE CHANGE NO.
2-26-81	5	13469-43

DIV	ASSEMBLY NUMBER	CD.	REV.	DWG.	DESCRIPTION	MC	STATUS	STATUS DATE	DWG. DESP.	FILE DATE
0860	90446284	3	A	0	PW BD ASSY 9HED	S	REL	2-26-81	FA501A	2-26-81

T	FIND NO.	U	PART NUMBER	CD	MC	QUANTITY		U/M	PART DESCRIPTION	MC	TUB	SCD. NO. IN	SCD. NO. OUT	S/N	WE IN	WE OUT
	107	01	51908739	2		1		PC	RES VAR 10K OHM	P						
	108	01	51908708	4		1		PC	RES CER VAR 5K OHM 10P 3/4W	P						
	110	01	51003092	7		1		PC	XSTR 2N2222 HI SPEED NPN SIL	P						
	111	01	94360304	3		2		PC	RES 1100 OHMS 1/4W 1P	P						
	112	01	94360352	2		2		PC	RES 3480 OHMS 1/4W 1P	P						
	113	01	94402173	2		2		PC	RES FM 5.1K OHM 1/4W CARBON	P						
	114	01	94402164	1		2		PC	RES FM 2.2K OHM 1/4W CARBON	P						
	115	01	94360400	9		2		PC	RES FXD FM 10.0K OHM 1P 1/4W	P						
	116	01	94402166	6		2		PC	RES FM 2.7K OHM 1/4W CARBON	P						
	117	01	94402158	3		1		PC	RES FM 1.2KOHM 1/4W CARBON	P						
	118	01	94402154	2		1		PC	RES FM 820 OHM 1/4W CARBON	P						
	119	01	94402139	3		1		PC	RES FM 200 OHM 1/4W CARBON	P						
	120	01	94402161	7		1		PC	RES FM 1.6K OHM 1/4W CARBON	P						
	121	01	24500144	1		1		PC	RES FXD COMP 160 OHMS 1/2W 5P	P						
	122	01	94842154	9		1		PC	CAP FXD CER .001UF 10P 1000V	P						
	124	01	15101109	5		1		PC	DIO 1N752A 400MW ZEN VR 5.6V	P						
	125	01	94227253	5		2		PC	CAP 1300 PF DIPPED MICA	P						
	126	01	94354824	8		2		PC	CAP CER 0.047 UF TYPE 1 20P	P						
	127	01	94240423	7		1		PC	CAP CER 150PF 50V 10P	P						
	129	01	94240421	1		1		PC	CAP CER 82 PF 50V	P						
	130	01	94356324	7		2		PC	INDUCTOR 10 MH	P						

BUILD ARC 214

ASSEMBLY PARTS LIST

PRINT DATE	PAGE	FILE CHANGE NO.
2-26-81	6	13469-43

DIV	ASSEMBLY NUMBER	CD.	REV.	DWG.	DESCRIPTION	MC	STATUS	STATUS DATE	DWG. DESP.	FILE DATE
0860	90446284	3	A	0	PW BD ASSY 9HED	S	REL	2-26-81	FA501A	2-26-81

T	FIND NO.	U	PART NUMBER	CD	MC	QUANTITY		U/M	PART DESCRIPTION	MC	TUB	SCD. NO. IN	SCD. NO. OUT	S/N	WE IN	WE OUT
	131	01	94402148	4		2		PC	RES FM 470 OHM 1/4W CARBON	P						
	132	01	15101108	7		1		PC	DIO 1N751A 400MW ZEN VR 5.1V	P						
	133	01	51859400	6		1	083	FT	CABLE RAD/FRQ 26GA STRD RG	W						
	135	01	51873600	4			015	OZ	VARNISH INSUL RED GLPT	B						

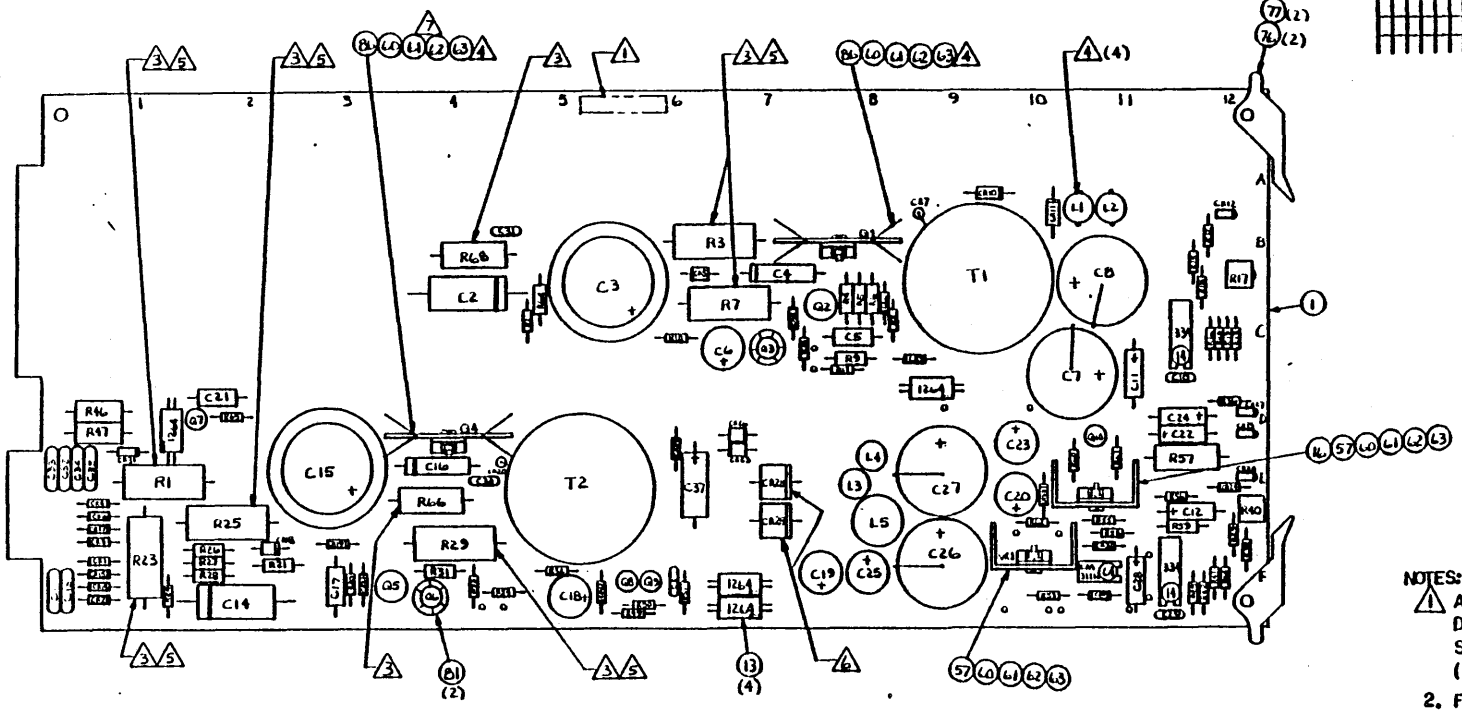

REVISION RECORD					
REV	ECO	DESCRIPTION	DWN	DATE	CHKD	APP
02	51008 B	RELEASED (NOT B)	—	[illegible]	—	[illegible]
03	51031	REVISED PER DRAWING	[illegible]	[illegible]	[illegible]	[illegible]
04	51109	[illegible]	[illegible]	[illegible]	[illegible]	[illegible]
05	51123	ADD NOTE 7, DELETE F/N 99	[illegible]	[illegible]	[illegible]	[illegible]
A	[illegible]	[illegible]	[illegible]	[illegible]	[illegible]	[illegible]

NOTES:

1. APPLY ASSY NO., REV LEVEL, LOC CODE, AND DATE CODE IN AREA SHOWN. MARK PER CDC SPEC 10121508; CHARACTER HEIGHT .12 (12 PT) COLOR WHITE.
2. FIND NUMBERS, ELEMENT IDENTIFIERS, AND REFERENCE DESIGNATIONS ARE FOR REFERENCE ONLY AND DO NOT APPEAR ON PART.
3. MOUNT RESISTORS .500 INCH OFF BOARD. USE TUBING F/N 86 .75 INCH ON EACH LEAD.
4. APPLY F/N 83 BETWEEN COMPONENT SIDE OF BOARD (L1, L2, L3 + L4 TO KEEP STATIONARY. APPLY F/N 83 TO PROTRUDING TABS (2) ON F/N 86 ON SOLDER SIDE OF PCB (2 PLACES).
5. RESISTORS TO BE INSTALLED WITH PROTRUSION TOWARD THE BOARD.
6. MOUNT DIODES .300 MIN .500 MAX OFF P.C. BOARD.
7. BEND HEAT SINK FIN STRAIGHT TO KEEP FROM SHORTING TO CR20. (2nd FIN FROM BOTTOM)

CHANGE TABLE	
DELETIONS	ADDITIONS

DETAIL OF CR7 & CR20 ASSY

BOM REFERENCE TABLE					
FIND NO	REFERENCE DESIGNATION	28	C9, C10, C29	65	R50
		29	C30, C31	66	R49, R58
2	T1	31	C11, C18, C22, C24, C28	67	R56
3	T2	33	R61	68	CR33
4	Q1, Q4	34	R46, R47	70	R38
5	Q2, Q5	35	R1, R23	71	R57
6	Q3, Q6, Q7, Q8, Q10	36	R3, R25	72	C19, C25
7	Q9	37	R4, R5, R6, R21, R27, R28	73	R21, R69
8	CR1 THRU CR4, CR6, CR9, CR14 THRU CR17,	38	R7	78	R9, R31
	CR19, CR22, CR31, CR35	39	R8, R11, R14, R18, R30, R33, R54	79	R19, R44
9	CR5, CR7, CR18, CR20, CR23, CR26	40	R10, R32	80	CR10, CR11
10	CR28, CR29	41	R51, R53	84	CR8, CR21
11	CR12, CR25, CR27, CR30	42	R39	85	C21
12	CR24, CR32	43	R2, R24	87	R29
15	CR13	45	R40	88	C34, C35
17	VR1	46	R20, R45	89	C37
18	L1, L2, L3, L4	47	R62		
19	L5	48	R66, R68		
20	C1, C15	49	R12		
21	C2, C14	50	R13, R36, R41, R42		
22	C4, C16	51	R17, R40		
23	C5, C17	52	R38		
24	C6, C18, C20, C23	53	R36		
25	C1, C13, C32, C33	54	R59		
26	C7, C8	56	R68		
27	C26, C27	58	R15		

APL 90446140	CONTROL DATA	TITLE: P.C. CARD ASSEMBLY, 9BKD	
DO NOT SCALE DRAWING	FA501-A/B	CODE IDENT 15920	D 90446140
	SCALE NONE	SHEET 1 OF 1	

BUILD ARC 210

ASSEMBLY PARTS LIST

PRINT DATE	PAGE	FILE CHANGE NO.
10-02-80	1	00014279

DIV.	ASSEMBLY NUMBER	CD	REV.	DWG.	DESCRIPTION	MC	STATUS	STATUS DATE	ENG. RESP.	FILE DATE
0860	90446140	7	B	D	CD ASSY 9BKD PWR SPLY	A	REL	06-30-80	FA501A/B	10-02-80

T	FIND NO	LI	PART NUMBER	CD	M	QUANTITY	U/M	PART DESCRIPTION	MC	YLD	ECO. NO. IN	ECO. NO. OUT	S/N	WK IN	WK OUT
	001	01	90446139	9		1	PC	PW BD 9BKD PWR SPLY	P						
	002	01	51940599	7		1	PC	TRANSFORMER FLYBACK 25KHZ	P						
	003	01	51940598	9		1	PC	TRANSFORMER FLYBACK 25KHZ	P						
	004	01	51918111	9		2	PC	XSTR NPN 400V 8A TO 220	P						
	005	01	51681100	7		2	PC	XSTR 2N5189 NPN SIL	P						
	006	01	51003092	7		5	PC	XSTR 2N2222 HI SPEED NPN SIL	P						
	007	01	51714000	0		1	PC	XSTR 2N2907 PNP SIL	P						
	008	01	95637304	7		14	PC	DIO IN4004 400PIV SIL 1.1V/1A	P						
	009	01	95691500	3		6	PC	RECT, 1N5615 F-R SIL 1 AMP	P						
	010	01	77835261	7		2	PC	POWER DIODE FAST RECOVER	P						
	011	01	19171201	7		4	PC	LIGHT IND	P						
	012	01	15101110	3		2	PC	DIO 1N753A 400MW ZEN VR 6.2V	P						
	013	01	15165538	8		4	PC	ISOLATOR OPTICALLY COUPLED	P						
	014	01	51718400	8		2	PC	IC 723C 334 VOLTAGE REGULATOR	P						
	015	01	51007385	1		1	PC	DIO IN4148 10MA MICRO SIL 30V	P						
	016	01	15163403	7		1	PC	IC LM317 ADJ +V RGLTR TO-220	P						
	017	01	15151400	7		1	PC	IC UA7900-5 356A NEG V RGLTR	P						
	018	01	51918616	7		4	PC	INDUCTOR	P						
	019	01	51918617	5		1	PC	INDUCTOR	P						
	020	01	51918627	4		2	PC	CAP ALUM ELECT 300UF 250V 15P	P						
	021	01	24506816	8		2	PC	CAP FXD MYL .33UF 10P 100VDCW	P						

BUILD ARC 210

ASSEMBLY PARTS LIST

PRINT DATE	PAGE	FILE CHANGE NO.
10-02-80	2	00014279

DIV.	ASSEMBLY NUMBER	CD	REV.	DWG.	DESCRIPTION	MC	STATUS	STATUS DATE	ENG. RESP.	FILE DATE
0860	90446140	7	B	D	CD ASSY 9BKD PWR SPLY	A	REL	06-30-80	FA501A/B	10-02-80

T	FIND NO	LI	PART NUMBER	CD	M	QUANTITY	U/M	PART DESCRIPTION	MC	YLD	ECO. NO. IN	ECO. NO. OUT	S/N	WK IN	WK OUT
	022	01	36180753	0		2	PC	CAP FXD MYL .001MFD 600V	P						
	023	01	51839147	9		2	PC	CAP FXD CER .100UF 10P 100VDC	P						
	024	01	95691133	3		4	PC	CAP ELEC 270UF -10+100P 25VDC	P						
	025	01	94842168	0		4	PC	CAP FXD CER .0033UF GMV 1000V	P						
	026	01	94397161	4		2	PC	CAP AL ELECT 560UF OHM 75V	P						
	027	01	94397162	2		2	PC	CAP AL ELECT 5600UF OHM 12V	P						
	028	01	51001120	8		3	PC	CAP CER F-2 .01UF +80-20P 25V	P						
	029	01	94842145	8		2	PC	CAP FXD CER 500PF 20P 1K	P						
	031	01	24504333	6		5	PC	CAP FXD TANT 2.2UF 20P 35VDCW	P						
	033	01	94360236	7		1	PC	RES FXD FM 237 OHM 1P 1/4W	P						
	034	01	24507181	6		2	PC	RES FXD COMP 5600 OHM 5P 1W	P						
	035	01	95596503	3		2	PC	RES FXD WW 4.3 OHM 10P 5WATT	P						
	036	01	95596520	7		2	PC	RES FXD WW 600 OHM 10P 5WATT	P						
	037	01	65019518	3		6	PC	RES CARB COMP 1/2W 1.3 OHMS	P						
	038	01	95596511	6		1	PC	RES FXD WW 43 OHM 10P 5WATT	P						
	039	01	94402159	1		7	PC	RES FM 1.3K OHM 1/4 W CARBON	P						
	040	01	94402172	4		2	PC	RES FM 4.7K OHM 1/4W CARBON	P						
	041	01	94402148	4		2	PC	RES FM 470 OHM 1/4W CARBON	P						
	042	02	94402166	6		1	PC	RES FM 2.7K OHM 1/4W CARBON	P						
	043	01	94402220	1		2	PC	RES FM 470K OHM 1/4W CARBON	P						
	045	01	94402160	9		1	PC	RES FM 1.5K OHM 1/4W CARBON	P						

BUILD ARC 210

ASSEMBLY PARTS LIST

PRINT DATE	PAGE	FILE CHANGE NO.
10-02-80	3	00014279

DIV.	ASSEMBLY NUMBER	CD	REV.	DWG.	DESCRIPTION	MC	STATUS	STATUS DATE	ENG. RESP.	FILE DATE
0860	90446140	7	B	D	CD ASSY 9BKD PWR SPLY	A	REL	06-30-80	FA501A/B	10-02-80

T	FIND NO	LI	PART NUMBER	CD	M	QUANTITY		U/M	PART DESCRIPTION	MC	YLD	ECO. NO. IN	ECO. NO. OUT	S/N	WK IN	WK OUT
	046	01	94402110	4		2		PC	RES FM 12 OHM 1/4W CARBON	P						
	047	01	94360331	6		1		PC	RES FXD FM 2100 OHM 1P 1/4W	P						
	048	01	24504839	2		2		PC	RES FXD COMP 100 OHM 5P 2WATT	P						
	049	01	94402176	5		1		PC	RES FM 6.8K OHM 1/4W CARBON	P						
	050	01	94402167	4		4		PC	RES FM 3K OHM 1/4W CARBON	P						
	051	01	51918846	0		2		PC	RES VAR CER 1K OHM 20P 1/2W	P						
	052	01	94402155	9		1		PC	RES FM 910OHM 1/4W CARBON	P						
	053	01	94402165	8		1		PC	RES FM 2.4K OHM 1/4W CARBON	P						
	054	01	24500148	2		1		PC	RES FXD COMP 240 OHM 5P 1/2W	P						
	056	01	94402180	7		1		PC	RES FM 10K OHM 1/4W CARBON	P						
	057	01	51918101	0		2		PC	HT/SK PLSTC SEMI FIG1 AND2	P						
	058	01	94402179	9		1		PC	RES FM 9.1K OHM 1/4W CARBON	P						
	060	01	51003962	1			001	OZ	PASTE, HEAT XFR CMPD NON-COND	B						
	061	01	10127103	9		4		PC	MSCR PAN PHL 4-40X.312 STL ZP	B						
	062	01	10126400	0		4		PC	WSHR, NO.4 EXT/T LK STL ZP	B						
	063	01	10125103	1		4		PC	NUT, HEX 4-40 MSCR STL ZP	B						
	064	01	15163443	3		1		PC	IC LM311N VOLT COMP HI IMP	P						
	065	01	94402122	9		1		PC	RES FM 390HM 1/4W CARBON	P						
	066	01	94402132	8		2		PC	RES FM 100 OHM 1/4W CARBON	P						
	067	01	94360100	5		1		PC	RES FXD FM 10 OHM 1P 1/4W	P						
	068	01	15101107	9		1		PC	DIO 1N750A 400MW ZEN VR 4.7V	P						

BUILD ARC 210

ASSEMBLY PARTS LIST

PRINT DATE	PAGE	FILE CHANGE NO.
10-02-80	4	00014279

DIV.	ASSEMBLY NUMBER	CD	REV.	DWG.	DESCRIPTION	MC	STATUS	STATUS DATE	ENG. RESP.	FILE DATE
0860	90446140	7	B	D	CD ASSY 9BKD PWR SPLY	A	REL	06-30-80	FA501A/B	10-02-80

T	FIND NO	LI	PART NUMBER	CD	M	QUANTITY		U/M	PART DESCRIPTION	MC	YLD	ECO. NO. IN	ECO. NO. OUT	S/N	WK IN	WK OUT
	069	01	16006500	9		REF		PC	FABRICATION SPECIFICATION	D						
	070	01	94360262	3		1		PC	RES FXD FM 442 OHM 1P 1/4W	P						
	071	01	51903001	9		1		PC	RES FXD WW .02 OHM 5P 2WATT	P						
	072	01	95691135	8		2		PC	CAP ELEC 470UF -10+100P 25VDC	P						
	073	01	17720519	2		2		PC	RES FXD COMP 0.2MEG .5W 5P	P						
	075	01	90446138	1		REF		PC	SCH DIAG 9BKD PWR SPLY	D						
	076	01	82311900	3		2		PC	INJECTOR-EJECTOR, NATURAL PCB	P						
	077	01	93533118	1		2		PC	ROLLPIN, .125D X .250L STL ZP	B						
	078	01	24500131	8		2		PC	RES FXD COMP 47 OHM 5P 1/2W	P						
	079	01	94402144	3		2		PC	RES FM 330 OHM 1/4W CARBON	P						
	080	01	95691506	0		2		PC	RECT, 1N5416 F-R SIL 3 AMP	P						
	081	01	51719600	2		2		PC	HEAT SINK ELCTRN COMP FAN TOP	P						
	082	01	51797418	4		1		FT	TBG INS .059 DIA T/W	B						
	083	01	94850716	5			050	OZ	SEAL, 3M (4400)	B			14279			8040
	083	02	62019900	0			050	OZ	EPOXY, 2-PART 5-MINUTE CLEAR	B		14279			8040	
	084	01	12081500	6		2		PC	DIODE POWER SCHOTTKY	P						
	085	01	51839124	8		1		PC	CAP FXD CER 1000PF 10P 100VDC	P						
	086	01	51906601	3		2		PC	HT SINK, SEMI FIG 3 ALUM BLK	P						
	087	01	95596512	4		1		PC	RES FXD WW 51 OHM 10P 5W	P						
	088	01	94842184	7		2		PC	CAP FXD CER .02UF +80-20P 1K	P						
	089	01	24504343	5		1		PC	CAP FXD TANT 15UF 20P 35VDCW	P						

BUILD ARC 210

ASSEMBLY PARTS LIST

PRINT DATE	PAGE	FILE CHANGE NO.
10-02-80	5	00014279

DIV.	ASSEMBLY NUMBER	CD	REV.	DWG.	DESCRIPTION	MC	STATUS	STATUS DATE	ENG. RESP.	FILE DATE
0860	90446140	7	B	D	CD ASSY 9BKD PWR SPLY	A	REL	06-30-80	FA501A/B	10-02-80

T	FIND NO	LI	PART NUMBER	CD	M	QUANTITY	U/M	PART DESCRIPTION	MC	YLD	ECO. NO. IN	ECO. NO. OUT	S/N	WK IN	WK OUT
								0084 TOTAL LINES							

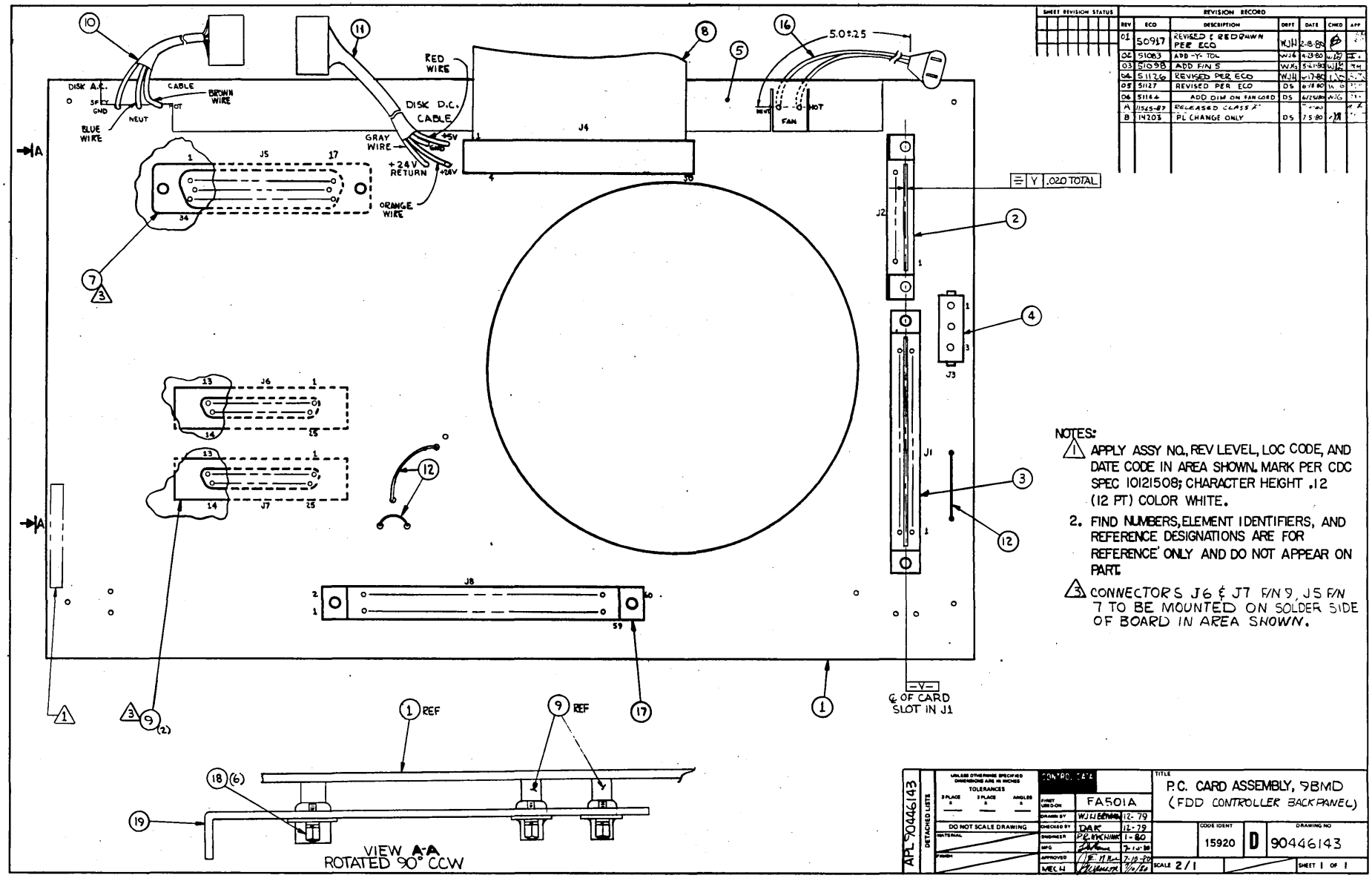

REV	ECO	DESCRIPTION	DRFT	DATE	CHKD	APP
01	50917	REVISED & REDRAWN PER ECO	WJH	2-8-80		
02	51083	ADD -Y- TOL	WJH	4-23-80		
03	51098	ADD F/N 5	WJH	5-21-80		
04	51126	REVISED PER ECO	WJH	6-17-80		
05	51127	REVISED PER ECO	DS	6/18/80		
06	51144	ADD DIM ON FAN CORD	DS	6/25/80		
A	11545-87	RELEASED CLASS A				
B	14203	PL CHANGE ONLY	DS	7-5-80		

BUILD ARC 230

ASSEMBLY PARTS LIST

PRINT DATE	PAGE	FILE CHANGE NO.
08-04-80	1	00014203

DIV.	ASSEMBLY NUMBER	CD	REV.	DWG.	DESCRIPTION	MC	STATUS	STATUS DATE	ENG. RESP.	FILE DATE
0860	90446143	1	B	D	CD ASSY 9BMD BACKPLANE	A	REL	07-16-80	FA501A	07-30-80

T	FIND NO	LI	PART NUMBER	CD	M	QUANTITY		U/M	PART DESCRIPTION	MC	YLD	ECO. NO. IN	ECO. NO. OUT	S/N	WK IN	WK OUT
	001	01	90446142	3		1		PC	PW BD 9BMD BACKPLANE	P						
	002	01	51940558	3		1		PC	CONN, PC BRD EDGE 8PIN UL	P						
	003	01	51940578	1		1		PC	CONN, PC BRD EDGE 30PIN	P						
	004	01	51906101	4		1		PC	CONN, 3 PIN PC MTD TIN FIG 1	P						
	005	01	71493161	5		1		PC	CHANNEL, EXTRUDED PLASTIC	P						
	007	01	83465803	1		1		PC	CONN,PLUG FEMALE	P			14203			8047
	007	02	10129640	8		1		PC	NO DOC CONN PLUG	P		14203			8047	
	008	01	61408892	0		1		PC	CABLE SIGNAL PLATO FD	A						
	009	01	83434704	9		2		PC	CONN 25 PIN	P			14203			8047
	009	02	10129648	1		2		PC	NO DOC CONN PLUG	P		14203			8047	
	010	01	61408891	2		1		PC	CABLE AC PLATO FD SUBSYSTEM	A						
	011	01	61408890	4		1		PC	CABLE DC PLATO FD SUBSYSTEM	A						
	012	01	24501808	0			250	FT	WIRE BUSS 20GA SOLID CU TP	W						
	016	01	65642201	1		1		PC	CORD, FAN 24.5IN 2CNDCT FEMAL	P						
	017	01	51863202	1		1		PC	CONN, BRD EDGE 60 PIN	P						
	018	01	94288024	6		6		PC	LKG DEVICE, CONN TYP 4 W/TYP3	P						
	019	01	71493091	4		1		PC	PLATE, I/O CONNECTOR	P						
									0017 TOTAL LINES							

No wire lists are contained in this manual. The following wire list document numbers are provided for reference purposes if needed.

Title	Document Number: Preproduction Units	Document Number: Production Units
60-Hz AC Entry Panel Wiring	61408888	61409023
50-Hz AC Entry Panel Wiring	61408889	61409024
DC Cable Wiring (Backpanel)	61408890	61408890
AC Cable Wiring (Backpanel)	61408891	61408891
Signal Cable Wiring (Backpanel)	61408892	61408892

COMMENT SHEET

MANUAL TITLE: PLATO® Flexible Disk Subsystem Hardware Maintenance Manual

PUBLICATION NO.: 62949100 REVISION: D

NAME: _____

COMPANY: _____

STREET ADDRESS: _____

CITY: _____ STATE: _____ ZIP CODE: _____

This form is not intended to be used as an order blank. Control Data Corporation welcomes your evaluation of this manual. Please indicate any errors, suggested additions or deletions, or general comments below (please include page number references).

CUT G LINE

PRINTED IN U.S.A.

03376 .V.

NO POSTAGE STAMP NECESSARY IF MAILED IN U.S.A.

FOLD ON DOTTED LINES AND STAPLE

OLD FOLD

NO POSTAGE NECESSARY IF MAILED IN THE UNITED STATES

BUSINESS REPLY MAIL

FIRST CLASS PERMIT NO. 8241 MINNEAPOLIS, MINN.

POSTAGE WILL BE PAID BY

CONTROL DATA CORPORATION

Technical Publications Department

2401 North Fairview Avenue

St. Paul, Minnesota 55113

CUT ALONG LINE

OLD FOLD

03377

HEADQUARTERS, P.O. BOX 0, MINNEAPOLIS, MINN. 55440
OFFICES AND SERVICE CENTERS IN MAJOR CITIES THROUGHOUT THE WORLD

LITHO IN U.S.A.

CONTROL DATA CORPORATION