83322150

CONTROL DATA CORPORATION

CDC® STORAGE MODULE DRIVE

BK4XX

BK5XX

INSTALLATION AND CHECKOUT
MAINTENANCE
PARTS DATA

Volume 1 of 2

HARDWARE MAINTENANCE MANUAL

83322150

CONTROL DATA CORPORATION

CDC® STORAGE MODULE DRIVE

BK4XX

BK5XX

INSTALLATION AND CHECKOUT
MAINTENANCE
PARTS DATA

Volume 1 of 2

HARDWARE MAINTENANCE MANUAL

REVISION RECORD

REVISION	DESCRIPTION
01 (9-29-76)	Preliminary manual released
02 (10-26-76)	Added electronic package repair and replacement information, additional parts data information, and corrections.
03 (12-1-76)	Added corrections, test and adjustment information, and checkout information.
A (12-15-76)	Manual released including ECOs 48092, 48113C, 48151, 48155, 48196A, 48200, 48210, 48211, 48240B, 48242, 48256, 48351.
B (1-18-77)	Manual updated to include technical and editorial changes.
C (3-22-77)	Manual updated to include Engineering Change Orders 48322, 48365A, 48436. Technical and editorial changes.
D (5-10-77)	Manual updated to include Engineering Change Orders 48519, 48437; Field Change Order 48518. Technical and editorial changes.
E (8-1-77)	Manual updated to include Engineering Change Orders 48477, 48478, 48576; Field Change Order 48477. Technical and editorial changes.
F (10-10-77)	Manual updated to include Engineering Change Orders 48574, 48604, 48630, 48635, 48716. Technical and editorial changes.

REVISION LETTERS I, O, Q AND X ARE NOT USED.

Address comments concerning this manual to:

Control Data Corporation
Technical Publications Dept.
7801 Computer Avenue
Minneapolis, Mn 55435

or use Comment Sheet in the back of this manual.

REVISION RECORD (Contd)

REVISION	DESCRIPTION
G (11-30-77)	Manual updated to include Engineering Change Orders 48744A and 48746. Technical and editorial changes.
H (2-28-78)	Manual updated to include Engineering Change Orders 48499, 48863, 48896, 48941, 48966. Editorial changes.
J (4-12-78)	Manual updated to include Engineering Change Orders 48953, 48798A; Field Change Order 55044. Technical and editorial changes.
K (4-21-78)	Manual updated to include ECOs 55087 (Release BK4A1D & BK5A1D), 55112, 55157, and 55162. Update also includes other technical and editorial changes.
L (10-10-78)	Manual updated to include ECOs 55116A and 55155B. Update includes technical and editorial changes. Update also includes addition of Appendixes A and B.
M (1-16-79)	Manual updated to include ECOs 55392, 55315, 55448, 55450, 55310, 55280, 55438, 55549, 55393, 55350, 55492A, 55522, FCO 55492 plus additional technical changes. This revision obsoletes all previous editions.
N (4-2-79)	Manual updated with ECOs 55630, 55520, 55534, 55687, 55631, plus additional technical and editorial changes.
P (6-15-79)	Manual updated with ECOs 55742A, 55633A, 55728, 55658, 55663A, 55273, 55248A, 55682, 55476A, 55697A, 55523B, 55743, plus additional technical and editorial changes. This revision obsoletes all previous editions.
R (9-4-79)	Manual updated with ECOs 55785, 55804, 55821, 55835, 55810, plus additional technical and editorial changes.

REVISION RECORD (Contd)

REVISION	DESCRIPTION
S (11-5-79)	Manual updated with ECOs 55812, 55912, 55854, 55923, 55909, 55925, 55839, 55924, 55883, 55914, 55886, plus additional technical and editorial changes.
T (11-15-79)	Manual updated with ECOs 55887B, 55898, 55980, 55982, plus additional technical and editorial changes.
U (4-25-80)	Manual updated with ECOs 55992, 55966, 55956, 55980, 60000, 55844, 60031, 60032, 60001, 60015, 60028, 60043, 55981, plus additional technical and editorial changes.
V (5-29-80)	Manual updated with ECOs 60136, 60115A, 60137, 60114, 60003A, 60044B, FCO 60044 plus additional technical and editorial changes.
W (9-25-80)	Manual updated with ECOs 60171, 60169, 60204, 60154, 55952A, 60140 and 60156. This revision obsoletes all previous editions.
Y (12-8-80)	Manual updated with ECOs 60155, 60288, 60246, 60240, plus additional technical and editorial changes.

MANUAL TO EQUIPMENT LEVEL CORRELATION

This manual reflects the equipment configurations listed below.

EXPLANATION: Locate the equipment type and series code number, as shown on the equipment FCO log, in the list below. Immediately to the right of the series code number is an FCO number If that number and all of the numbers underneath it match all of the numbers on the equipment FCO log, then this manual accurately reflects the equipment.

This correlation sheet also applies to the following related manuals:

Pub No. 83322240 Rev. T
Pub No. 83322250 Rev. P

EQUIPMENT TYPE	SERIES CODE	WITH FCOs	COMMENTS
BK4XX/BK5XX	10	None	
	11	None	
	12	None	
	13	None	
	14	None	
	15	None	
	16	48477	
		48518A	
	17	None	
	18	None	
	19	55172	Optional
	20	55044	
	21	None	
	22	55112	
		55157	
		55422	
	23	None	
	24	55492	S/C 24 only
	25	None	
	26	None	
	27	None	

EQUIPMENT TYPE	SERIES CODE	WITH FCOs	COMMENTS
	28	None	
	29	None	
	30	None	
	31	None	
	32	60044	S/C 24-32 BK4B7A/B only
	33	None	
	34	None	
	35	None	

LIST OF EFFECTIVE PAGES

Sheet 1 of 7

New features, as well as changes, deletions, and additions to information in this manual are indicated by bars in the margins or by a dot near the page number if the entire page is affected. A bar by the page number indicates pagination rather than content has changed.

PAGE	REV	PAGE	REV
S-1 Div	-	xxxiii	Y
Blank	-	xxxiv	Y
ii	W	xxxv	Y
iii	W	xxxvi	Y
iv	Y	xxxvii	Y
v	Y	xxxviii	Y
vi	Y	xxxix	Y
vii	Y	xxxx	Y
viii	Y	S-1 Div	-
ix	Y	Blank	-
x	Y	1-1	W
xi	Y	1-2	Y
xii	Y	1-3	Y
xiii	W	1-4	Y
Blank	-	1-5	Y
xv	W	1-6	Y
xvi	Y	1-7	W
xvii	Y	1-8	Y
xviii	Y	1-9	W
xix	Y	1-10	W
xx	Y	1-11	W
xxi	Y	1-12	Y
xxii	Y	1-13	Y
xxiii	Y	1-14	Y
xxiv	Y	1-15	Y
xxv	Y	1-16	Y
xxvi	Y	1-17	Y
xxvii	Y	1-18	Y
xxviii	Y	1-19	Y
xxix	Y	1-20	Y
xxx	Y	1-21	Y
xxxi	Y	1-22	Y
Blank	-	1-23	Y

LIST OF EFFECTIVE PAGES (Contd)

Sheet 2 of 7

PAGE	REV	PAGE	REV
1-24	Y	2-22	W
1-25	Y	2-23	W
1-26	Y	2-24	W
1-27	Y	2-25	W
1-28	Y	2-26	W
1-29	Y	2-27	W
1-30	Y	2-28	W
1-31	Y	2-29	Y
1-32	Y	2-30	W
1-33	Y	2-31	W
1-34	Y	2-32	W
1-35	Y	2-33	W
1-36	Y	2-34	W
1-37	Y	2-35	W
Blank	-	2-36	W
S-2 Div	-	2-37	W
Blank	-	2-38	W
2-1	W	2-39	W
Blank	-	2-40	Y
S-2A Div	-	2-41	W
Blank	-	2-42	W
2-3	W	2-43	W
2-4	W	Blank	-
2-5	W	S-2B Div	-
2-6	W	Blank	-
2-7	W	2-45	W
2-8	W	2-46	Y
2-9	W	2-47	W
2-10	W	2-48	W
2-11	W	2-49	W
2-12	W	2-50	W
2-13	W	2-51	W
2-14	W	2-52	W
2-15	W	2-53	W
2-16	W	2-54	W
2-17	W	2-55	W
2-18	W	2-56	W
2-19	W	2-57	W
2-20	W	2-58	W
2-21	W	S-2C Div	-

LIST OF EFFECTIVE PAGES (Contd)

Sheet 3 of 7

PAGE	REV	PAGE	REV
Blank	-	2-96	W
2-59	W	2-97	W
2-60	W	2-98	W
2-61	W	2-99	W
2-62	W	2-100	W
2-63	W	2-101	W
2-64	W	2-102	W
2-65	W	2-103	W
2-66	Y	2-104	W
2-67	W	2-105	W
2-68	W	2-106	W
2-69	W	2-107	W
2-70	W	2-108	W
2-71	W	2-109	W
2-72	Y	2-110	W
2-73	Y	2-111	W
2-74	W	2-112	W
2-75	Y	2-113	W
2-76	W	2-114	W
2-77	W	2-115	W
2-78	W	2-116	W
2-79	W	2-117	W
2-80	W	2-118	W
2-81	W	2-119	W
2-82	W	2-120	W
S-2D Div	-	2-121	W
Blank	-	2-122	W
2-83	W	2-123	W
2-84	W	2-124	W
2-85	W	2-125	W
2-86	Y	2-126	W
2-87	W	2-127	W
2-88	W	2-128	W
2-89	W	2-129	W
2-90	W	2-130	W
2-91	W	2-131	W
2-92	W	2-132	W
2-93	W	2-133	W
2-94	W	2-134	W
2-95	W	2-135	W

LIST OF EFFECTIVE PAGES (Contd)

Sheet 4 of 7

PAGE	REV	PAGE	REV
2-136	W	3-32	W
2-137	W	3-33	W
2-138	W	Blank	-
2-139	W	3-35	W
2-140	W	3-36	W
S-3 Div	-	3-37	W
Blank	-	3-38	Y
3-1	W	3-39	W
Blank	-	Blank	-
S-3A Div	-	3-41	Y
Blank	-	3-42	W
3-3	W	3-43	Y
3-4	W	Blank	-
3-5	W	3-45	Y
3-6	W	3-46	Y
3-7	W	3-47	W
3-8	Y	Blank	-
3-9	W	3-49	Y
3-10	W	3-50	Y
3-11	W	3-51	W
3-12	W	Blank	-
3-13	W	3-53	Y
3-14	W	3-54	Y
3-15	W	3-55	W
3-16	W	Blank	-
3-17	W	3-57	Y
3-18	W	3-58	W
3-19	W	3-59	W
3-20	W	3-60	W
3-21	W	3-61	W
3-22	W	3-62	W
3-23	W	3-63	Y
Blank	-	3-64	Y
3-25	W	3-65	Y
3-26	W	3-66	W
3-27	W	3-67	W
3-28	W	3-68	W
3-29	W	3-69	Y
3-30	W	3-70	W
3-31	W	3-71	W

LIST OF EFFECTIVE PAGES (Contd)

Sheet 5 of 7

PAGE	REV	PAGE	REV
3-72	W	3-112	W
3-73	Y	3-113	W
Blank	-	Blank	-
3-75	W	3-115	W
3-76	W	3-116	W
3-77	W	3-117	W
3-78	W	Blank	-
3-79	Y	3-119	W
3-80	W	3-120	Y
3-81	W	3-121	Y
Blank	-	3-122	W
3-83	W	3-123	W
3-84	W	3-124	Y
3-85	Y	3-125	Y
Blank	-	3-126	W
3-87	Y	3-127	W
3-88	W	3-128	W
3-89	W	3-129	W
3-90	W	Blank	-
3-91	W	3-131	W
3-92	W	3-132	W
3-93	Y	3-133	W
3-94	W	3-134	W
3-95	W	3-135	Y
3-96	W	Blank	-
3-97	W	3-137	Y
3-98	W	3-138	W
3-99	W	3-139	W
Blank	-	Blank	-
3-101	W	3-141	W
3-102	W	3-142	W
3-103	W	3-143	Y
3-104	W	Blank	-
3-105	W	3-144	W
Blank	-	3-145	Y
3-107	W	3-146	W
3-108	W	3-147	Y
3-109	W	Blank	-
Blank	-	3-149	W
3-111	W	3-150	W

LIST OF EFFECTIVE PAGES (Contd)

Sheet 6 of 7

PAGE	REV	PAGE	REV
3-151	Y	3-189	W
Blank	-	3-190	W
3-153	Y	3-191	W
3-154	W	3-192	Y
3-155	W	3-193	W
Blank	-	3-194	Y
3-157	W	3-195	Y
3-158	W	3-196	Y
3-159	Y	3-197	W
Blank	-	3-198	W
3-161	W	3-199	Y
3-162	W	3-200	Y
3-163	W	3-201	Y
Blank	-	3-202	Y
3-165	W	3-203	Y
3-166	Y	Blank	-
3-167	Y	App A Div	-
3-168	W	Blank	-
3-169	W	A-i	-
3-170	W	Blank	-
3-171	W	A-1	W
3-172	W	A-2	W
3-173	W	A-3	W
Blank	-	A-4	W
3-175	W	A-5	W
3-176	Y	Blank	-
3-177	Y	DLT Div	-
3-178	W	Blank	-
3-179	W	A-7	W
3-180	W	A-8	W
3-181	W	A-9	W
Blank	-	A-10	W
S-3B Div	-	A-11	W
Blank	-	A-12	W
3-183	W	A-13	W
3-184	W	A-14	W
3-185	W	A-15	W
3-186	W	A-16	W
3-187	W	A-17	W
3-188	Y	A-18	W

LIST OF EFFECTIVE PAGES (Contd)

Sheet 7 of 7

PAGE	REV	PAGE	REV
A-19	W	B-11	W
A-20	W	B-12	W
Procedures	-	B-13	W
Blank	-	B-14	W
A-21	W	B-15	W
A-22	W	B-16	W
A-23	W	B-17	W
A-24	W	B-18	W
A-25	W	B-19	W
A-26	W	B-20	W
A-27	W	B-21	W
A-28	W	B-22	W
A-29	W	B-23	W
A-30	W	Blank	-
A-31	W	Procedures	-
Blank	-	Blank	-
App B Div	-	B-25	W
Blank	-	B-26	W
B-i	-	B-27	W
Blank	-	B-28	W
B-1	W	B-29	W
B-2	W	B-30	W
B-3	W	B-31	W
B-4	W	B-32	W
B-5	W	B-33	W
B-6	W	B-34	W
DLT Div	-	B-35	W
Blank	-	Blank	-
B-7	W	Cmt Sht	-
B-8	W	Rtn Env	-
B-9	W	Blank	-
B-10	W	Cover	-

PREFACE

This manual contains maintenance information applicable to all the Storage Module Drives (SMDs) listed in the configuration charts (found following the table of contents). The configuration charts define each of the equipments covered by this manual in terms of cabinet mounting styles, cabinet colors, and the various electronic features provided. Since this manual covers all of the various configurations available on the SMD; it is necessary to understand exactly which configuration you have, in order to know which procedures in this manual are applicable to your drive.

This manual provides information relating to the field level maintenance of the SMDs; that is, maintenance which can be performed on the SMD at the installation site. The manual assumes that the reader is already trained in the use of normal mechanical and electronic repair equipment; and is familiar with the basic maintenance procedures, such as soldering, wirewrapping, etc. Also, the procedures contained in this manual are written assuming that the reader knows where all the various parts of the drive are located, what they are called, and how to open the drive to get at them. Anyone not familiar with this type of information is referred to the General Maintenance Information in Section 2.

Information in this manual is divided into three sections:

- Section 1 - Installation and Checkout
- Section 2 - Maintenance
- Section 3 - Parts Data

Other manuals, also applicable to the SMDs covered in this manual, are as follows:

Publication No.	Title
83322250	Hardware Maintenance Manual Volume 2, Diagrams and Wire Lists. Applicable to BK4XX
83322240	Hardware Maintenance Manual, Volume 2, Diagrams and Wire Lists. Applicable to BK4XX
83322200	Hardware Reference Manual, General Description, Operation, Theory of Operation, Discrete Component Circuits
83322440	Normandale Circuits Manual General Theory, Logic Symbology, Data Sheets

A guide for the Disk Drive Operator, publication number 83323770, is also available. The guide may be ordered through Literature Distribution Services at the following address:

Control Data Corporation
Literature Distribution Services
308 North Dale St.
St. Paul, Mn. 55103

CONTENTS

2A. GENERAL MAINTENANCE INFORMATION

FIGURES

TABLES

APPENDIXES

CONFIGURATION CHART

EQUIP	TLA	POWER V	POWER Hz	DATA CAP (MB)	CH	A CABLE CONFIG	PACK INTLK SOL	CLR CODE *	CAB MTG STYLE
BK4A1A	47173102	120	60	40	S	60-pin	No	A	30-in rk
BK4A1B	47173103	220/240	50	40	S	60-pin	No	A	30-in rk
BK4A1D	47173147	220/240	50	40	S	60-pin	Yes	AH	30-in rk
BK4A2A	47173104	120	60	40	D	60-pin	No	A	30-in rk
BK4A2B	47173105	220/240	50	40	D	60-pin	No	A	30-in rk
BK4A3A	47173106	120	60	40	S	60-pin	No	B	36-in rk
BK4A3B	47173107	220/240	50	40	S	60-pin	No	B	36-in rk
BK4A4A	47173108	120	60	40	D	60-pin	No	B	36-in rk
BK4A4B	47173109	220/240	50	40	D	60-pin	No	B	36-in rk
BK4A5A	47173116	120	60	40	S	60-pin	No	C	ped cab
BK4A5B	47173117	220/240	50	40	S	60-pin	No	C	ped cab
BK4A5C	47173150	120	60	40	S	S&IOBC	Yes	AK	ped cab
BK4A5D	47173151	220/240	50	40	S	S&IOBC	Yes	AK	ped cab
BK4A5E	47173152	120	60	40	S	60-pin	No	AY	ped cab
BK4A5F	47173153	220	50	40	S	60-pin	No	AY	ped cab
BK4A5G	47173157	100	60	40	S	S&IOBC	Yes	AK	ped cab
BK4A5H	47173156	100	50	40	S	S&IOBC	Yes	AK	ped cab
BK4A6A	47173118	120	60	40	D	60-pin	No	C	ped cab
BK4A6B	47173119	220/240	50	40	D	60-pin	No	C	ped cab
BK4A7A	47173120	120	60	40	S	60-pin	No	D	acst drw
BK4A7B	47173121	220/240	50	40	S	60-pin	No	E	acst drw
BK4A8A	47173122	120	60	40	D	60-pin	No	D	acst drw

Table Continued on Next Page

CONFIGURATION CHART (Contd)

EQUIP	TLA	POWER V	POWER Hz	DATA CAP (MB)	CH	A CABLE CONFIG	PACK INTLK SOL	CLR CODE *	CAB MTG STYLE
BK4A8B	47173123	220/240	50	40	D	60-pin	No	E	acst drw
BK4A9A	47173124	120	60	40	S	60-pin	No	F	acst cab
BK4A9B	47173125	220/240	50	40	S	60-pin	No	G	acst cab
BK4A9C	47173146	220	50	40	S	60-pin	Yes	-	acst cab
BK4A9E	47173154	120	60	40	S	60-pin	No	BM	acst cab
BK4A9F	47173155	220	50	40	S	60-pin	No	BN	acst cab
BK4A9G	47173162	120	60	40	S	S&IOBC	Yes	BZ	acst cab
BK4B1A	47173126	120	60	40	D	60-pin	No	F	acst cab
BK4B1B	47173127	220/240	50	40	D	60-pin	No	G	acst cab
BK4B5A	47173134	120	60	40	D	50-pin	No	C	ped cab
BK4B5B	47173135	220/240	50	40	D	50-pin	No	C	ped cab
BK4B5C	47173136	120	60	40	S	50-pin	No	C	ped cab
BK4B5D	47173137	220/240	50	40	S	50-pin	No	C	ped cab
BK4B6C	47173140	120	60	40	S	60-pin	No	K	ped cab
BK4B6D	47173141	220/240	50	40	S	60-pin	No	K	ped cab
BK4B7A	47173148	120	60	40	S	60-pin	No	-	basic
BK4B7B	47173149	220/240	50	40	S	60-pin	No	-	basic
BK4B9A	47173110	120	60	40	S	60-pin	No	L	ped cab
BK4B9B	47173111	220/240	50	40	S	60-pin	No	L	ped cab
BK4B9C	47173112	120	60	40	S	60-pin	No	M	acst cab
BK4B9D	47173113	220/240	50	40	S	60-pin	No	M	acst cab
BK4B9E	47173114	120	60	40	S	60-pin	No	N	acst drw
BK4B9F	47173115	220/240	50	40	S	60-pin	No	R	acst drw

Table Continued on Next Page

CONFIGURATION CHART (Contd)

EQUIP	TLA	POWER V	POWER Hz	DATA CAP (MB)	CH	A CABLE CONFIG	PACK INTLK SOL	CLR CODE *	CAB MTG STYLE
BK4B9G	47173142	120	60	40	S	60-pin	No	S	acst cab
BK4B9H	47173143	220/240	50	40	S	60-pin	No	Z	acst cab
BK4B9J	47173144	120	60	40	S	60-pin	No	T	acst drw
BK4B9K	47173145	220/240	50	40	S	60-pin	No	U	acst drw

*SEE TABLE 3-1 COLOR CODE CHART

CONFIGURATION CHART

EQUIP	TLA	POWER V	POWER Hz	DATA CAP (MB)	CH	A CABLE CONFIG	PACK INTLK SOL	CLR CODE *	CAB MTG STYLE
BK5A1A	47173002	120	60	80	S	60-pin	No	A	30-in rk
BK5A1B	47173003	220/240	50	80	S	60-pin	No	A	30-in rk
BK5A1D	47173085	220/240	50	80	S	60-pin	Yes	AH	30-in rk
BK5A1E	47292521	120	60	80	S	S&IOBC	No	AX	30-in rk
BK5A1F	47292522	220/240	50	80	S	S&IOBC	Bi	AX	30-in rk
BK5A1G	47292542	120	60	80	S	60-pin	No	BG	uni cab
BK5A1H	47292543	220	50	80	S	60-pin	No	BG	uni cab
BK5A1K	47292551	240	50	80	S	60-pin	Yes	BB	30-in rk
BK4A1M	47292573	220	50	80	S	60-pin	Yes	A	30-in rk
BK5A2A	47173004	120	60	80	D	60-pin	No	A	30-in rk
BK5A2B	47173005	220/240	50	80	D	60-pin	No	A	30-in rk
BK5A3A	47173006	120	60	80	S	60-pin	No	B	36-in rk
BK5A3B	47173007	220/240	50	80	S	60-pin	No	B	36-in rk
BK5A3C	47292519	120	60	80	S	60-pin	No	AR	36-in rk
BK5A3D	47292520	220/240	50	80	S	60-pin	No	AR	36-in rk
BK5A3F	48292544	220	50	80	S	60-pin	No	B	36-in rk
BK5A3H	47292561	220	50	80	S	60-pin	Yes	B	36-in rk
BK5A3K	47292579	220	50	80	S	60-pin	No	BP	36-in rk
BK5A4A	47173008	120	60	80	D	60-pin	No	B	36-in rk
BK5A4B	47173009	220/240	50	80	D	60-pin	No	B	36-in rk
BK5A5A	47173016	120	60	80	S	60-pin	No	C	ped cab
BK5A5B	47173017	220/240	50	80	S	60-pin	No	C	ped cab
BK5A5C	47173048	120	60	80	S	60-pin	No	J	ped cab
BK5A5D	47173049	220/	50	80	S	60-pin	No	J	ped cab

Table Continued on Next Page

CONFIGURATION CHART (Contd)

EQUIP	TLA	POWER V	POWER Hz	DATA CAP (MB)	CH	A CABLE CONFIG	PACK INTLK SOL	CLR CODE *	CAB MTG STYLE
BK5A5E	47173068	120	60	80	S	60-pin	No	AE	ped cab
BK5A5F	47173074	120	60	80	S	60-pin	No	V	ped cab
BK5A5G	47173075	220/240	50	80	S	60-pin	No	V	ped cab
BK5A5H	47173076	120	60	80	S	S&IOBC	Yes	W	ped cab
BK5A5J	47173088	120	60	80	S	60-pin	No	AJ	ped cab
BK5A5K	47173089	220/240	50	80	S	60-pin	No	AJ	ped cab
BK5A5L	47173090	120	60	80	S	75-pin	Yes	***	ped cab
BK5A5M	47173091	220/240	50	80	S	75-pin	Yes	***	ped cab
BK5A5N	47292504	120	60	80	S	S&IOBC	Yes	AK	ped cab
BK5A5P	47292505	220/240	50	80	S	S&IOBC	Yes	AK	ped cab
BK5A5R	47292536	120	60	80	S	60-pin	No	AW	ped cab
BK5A5S	47292537	220/240	50	80	S	60-pin	No	AW	ped cab
BK5A5T	47292538	120	60	80	S	60-pin	Yes	***	ped cab
BK5A5U	47292539	220	50	80	S	60-pin	Yes	***	ped cab
BK5A5V	47292540	120	60	80	S	60-pin	No	AY	ped cab
BK5A5W	47292541	220	50	80	S	60-pin	No	AY	ped cab
BK5A5Y	47292545	120	60	80	S	60-pin	No	AZ	ped cab
BK5A5Z	47292552	220	50	80	S	60-pin	Yes	BC	ped cab
BK5A6A	47173018	120	60	80	D	60-pin	No	C	ped cab
BK5A6B	47173019	220/240	50	80	D	60-pin	No	C	ped cab
BK5A6E	47292547	120	60	80	D	S&IOBC	Yes	BA	ped cab
BK5A6F	47292548	220	50	80	D	S&IOBC	Yes	BA	ped cab
BK5A6G	47292555	120	60	80	D	S&IOABC	Yes	***	ped cab
BK5A6H	47292556	220	50	80	D	S&IOABC	Yes	***	ped cab
BK5A7A	47173020	120	60	80	S	60-pin	No	S	acst drw
BK5A7B	47173021	220/240	50	80	S	60-pin	No	W	acst drw

Table Continued on Next Page

CONFIGURATION CHART (Contd)

EQUIP	TLA	POWER V	POWER Hz	DATA CAP (MB)	CH	A CABLE CONFIG	PACK INTLK SOL	CLR CODE *	CAB MTG STYLE
BK5A7G	47173080	120	60	80	S	60-pin	No	AC	acst drw
BK5A7H	47173078	220/240	50	80	S	60-pin	No	AA	acst drw
BK5A7J	47292513	120	60	80	S	60-pin	Yes	BS***	acst drw
BK5A7K	47292514	220/240	50	80	S	60-pin	Yes	BS***	acst drw
BK5A7L	47292525	120	60	80	S	60-pin	No	AU	acst drw
BK5A7M	47292526	220/240	50	80	S	60-pin	Yes	AV	acst drw
BK5A7N	47292529	120	60	80	S	60-pin	No	BS***	acst drw
BK5A7P	47292530	220/240	50	80	S	60-pin	No	BS***	acst drw
BK5A7R	47292557	120	60	80	S	S&IOBC	Yes	BD	acst drw
BK5A7S	47292558	220	50	80	S	S&IOBC	Yes	BD	acst drw
BK5A7U	47292562	220	50	80	S	60-pin	Yes	E	acst drw
BK5A7V	47292565	120	60	80	S	S&IOABC	Yes	BK	acst drw
BK5A7W	47292566	240	50	80	S	S&IOABC	Yes	BL	acst drw
BK5A7Y	47292574	120	60	80	S	60-pin	Yes	BK***	acst drw
BK5A7Z	47292575	220	50	80	S	60-pin	Yes	BL***	acst drw
BK5A8A	47173022	120	60	80	D	60-pin	No	D	acst drw
BK5A8B	47173023	220/240	50	80	D	60-pin	No	E	acst drw
BK5A9A	47173024	120	60	80	S	60-pin	No	F	acst cab
BK5A9B	47173025	220/240	50	80	S	60-pin	No	G	acst cab
BK5A9G	47173066	120	60	80	S	60-pin	No	X	acst cab
BK5A9H	47173067	220/240	50	80	S	60-pin	No	Y	acst cab
BK5A9J	47173069	220/240	50	80	S	60-pin	No	-	acst cab
BK5A9K	47173077	220/240	50	80	S	60-pin	No	AB	acst cab

Table Continued on Next Page

CONFIGURATION CHART (Contd)

EQUIP	TLA	POWER V	POWER Hz	DATA CAP (MB)	CH	A CABLE CONFIG	PACK INTLK SOL	CLR CODE *	CAB MTG STYLE
BK5A9L	47173081	120	60	80	S	60-pin	No	AD	acst cab
BK5A9M	47292516	220/240	50	80	S	60-pin	Yes	BU***	acst cab
BK5A9N	47292510	120	60	80	S	60-pin	No	AL	acst cab
BK5A9P	47292515	120	60	80	S	60-pin	Yes	BT***	acst cab
BK5A9R	47292517	120	60	80	S	60-pin	No **	AN	acst cab
BK5A9S	47292518	220/240	50	80	S	60-pin	No **	AS	acst cab
BK5A9T	47292523	120	60	80	S	60-pin	No	AT	acst cab
BK5A9U	47292524	220/240	50	80	S	60-pin	Yes	AX	acst cab
BK5A9V	47292527	120	60	80	A	60-pin	No	BT***	acst cab
BK5A9W	47292528	220/240	50	80	S	60-pin	No	BU***	acst cab
BK5A9Z	47292564	220	50	80	S	60-pin	Yes	G	acst cab
BK5B1A	47173026	120	60	80	D	60-pin	No	F	acst cab
BK5B1B	47173027	220/240	50	80	D	60-pin	No	G	acst cab
BK5B5J	47173082	120	60	80	S	60-pin	Yes	AF	acst cab
BK5B5K	47173083	220/240	50	80	S	60-pin	Yes	AG	acst cab
BK5B5L	47292549	120	60	80	S	S&IOBC	Yes	BA	ped cab
BK5B5M	47292550	220	50	80	S	S&IOBC	Yes	BA	ped cab
BK5B5N	47292553	120	60	80	S	S&IOABC	Yes	2	ped cab
BK5B5P	47292554	220	50	80	S	S&IOABC	Yes	2	ped cab
BK5B5S	47292563	220	50	80	S	60-pin	Yes	C	ped cab
BK5B5T	47292572	100	60	80	S	S&IOBC	Yes	AK	ped cab
BK5B5U	47292571	100	50	80	S	S&IOBC	Yes	AK	ped cab
BK5B5W	47292581	220	50	80	S	60-pin	No	C	ped cab
BK5B6A	47173036	120	60	80	D	S&IOBC	Yes	H	ped cab
BK5B6B	47173037	220/240	50	80	D	S&IOBC	Yes	H	ped cab

Table Continued on Next Page

CONFIGURATION CHART (Contd)

EQUIP	TLA	POWER V	POWER Hz	DATA CAP (MB)	CH	A CABLE CONFIG	PACK INTLK SOL	CLR CODE *	CAB MTG STYLE
BK5B6C	47173038	120	60	80	S	S&IOBC	Yes	H	ped cab
BK5B6D	47173039	220/240	50	80	S	S&IOBC	Yes	H	ped cab
BK5B7A	47173040	120	60	80	D	50-pin	No	C	ped cab
BK5B7B	47173041	220/240	50	80	D	50-pin	No	C	ped cab
BK5B7C	47173042	120	60	80	S	50-pin	No	C	ped cab
BK5B7D	47173043	220/240	50	80	S	50-pin	No	C	ped cab
BK5B8C	47173046	120	60	80	S	S&IOBV	No **	K	ped cab
BK5B8D	47173047	220/240	50	80	S	S&IOBV	No **	K	ped cab
BK5B9A	47173010	120	60	80	S	60-pin	No	L	ped cab
BK5B9B	47173011	220/240	50	80	S	60-pin	No	L	ped cab
BK5B9C	47173012	120	60	80	S	60-pin	No	M	acst cab
BK5B9D	47173013	220/240	50	80	S	60-pin	No	M	acst cab
BK5B9E	47173014	120	60	80	S	60-pin	No	N	acst drw
BK5B9F	47173015	220/240	50	80	S	60-pin	No	R	acst drw
BK5B9J	47173070	120	60	80	S	60-pin	No	S	acst cab
BK5B9K	47173071	220/240	50	80	S	60-pin	No	S	acst cab
BK5B9L	47173072	120	60	80	S	60-pin	No	T	acst drw
BK5B9M	47173073	220/240	50	80	S	60-pin	No	U	acst drw
BK5C1E	47173092	120	60	40	S	60-pin	No	-	basic
BK5C1F	47173093	220/240	50	40	S	60-pin	No	-	basic
BK5C1G	47292535	120	60	80	S	60-pin	No	-	basic
BK5C1J	47292585	100	50	80	S	60-pin	No	-	basic
BK5C1K	47292586	100	60	80	S	60-pin	No	-	basic

Table Continued on Next Page

CONFIGURATION CHART (Contd)

EQUIP	TLA	POWER V	POWER Hz	DATA CAP (MB)	CH	A CABLE CONFIG	PACK INTLK SOL	CLR CODE *	CAB MTG STYLE
BK5C2A	47173050	120	60	80	S	60-pin	No	P	nude
BK5C2B	47173051	220/240	50	80	S	60-pin	No	P	nude
BK5C3A	47292511	120	60	80	S	60-pin	No	AM	desk
BK5C3B	47292512	220/240	50	80	S	60-pin	No	AM	desk
BK5C4A	47292559	120	60	80	S	S&IOBC	Yes	BE	acst cab
BK5C4B	47292560	220	50	80	S	S&IOBC	Yes	BF	acst cab
BK5C4C	47292567	120	60	80	S	S&IOABC	Yes	BH	acst cab
BK5C4D	47292568	220	50	80	S	S&IOABC	Yes	BJ	acst cab
BK5C4E	47292569	120	60	80	S	60-pin	No	BM	acst cab
BK5C4F	47292570	220	50	80	S	60-pin	No	BN	acst cab
BK5C4G	47292576	120	60	80	S	60-pin	Yes	BH***	acst cab
BK5C4H	47292577	220	50	80	S	60-pin	Yes	BJ***	acst cab
BK5C4K	47292578	220	50	80	S	60-pin	No	BR	acst cab
BK5C4M	47292580	220	50	80	S	60-pin	Yes	BV	acst cab
BK5C4P	47292582	220	50	80	S	60-pin	Yes	BW	acst cab
BK5C4R	47292583	120	60	80	S	S&IOBC	Yes	BX	acst cab
BK5C4S	47292584	220	50	80	S	S&IOBC	Yes	BY	acst cab

*SEE TABLE 3-1 COLOR CODE CHART

** Units built after S/C 24 have Pack Interlocks.

*** Units have Special Supplement.

ABBREVIATIONS

30-IN RK	30-Inch Rack
36-IN RK	36-Inch Rack
ABR	Absolute Reserve
ABV	Above
ACST CAB	Acoustic Cabinet
ACST DRW	Acoustic Drawer
ADDR	Address
AGC	Automatic Gain Control
AM	Address Mark
AMPL	Amplifier
BLK	Black
BLW	Below
CAR	Cylinder Address Register
CH	Channel
CHAN	Channel
CNTLGL	Centrifugal
CNTR	Counter
COMP	Compensation
COMPTR	Comparitor
CONFIG	Configuration
CONT	Continued
CR REF	Cross Reference
CYL	Cylinder
D/A	Digital To Analog
DCDR	Decoder
DIFF	Difference
DLY	Delay
DRVR	Driver
DSBL	Disable
ECL	Emitter Coupled Logic
ECO	Engineering Change Order
EMER	Emergency
EN	Enable
EOT	End Of Travel
EQUIP	Equipment
EQUIV	Equivalent
FCO	Field Change Order
FF	Flip Flop
FIG	Figure
FLT	Fault
FREQ	Frequency
FTU	Field Test Unit
FWD	Forward
GND	Ground
HD	Head
I/O	Input-Output
INTLK	Interlock
LAP	Logical Address Plug
LD	Load
MAINT	Maintenance
MAX	Maximum
MB	Megabyte
MFM	Modified Frequency Modulation
MK	Mark
MUTL	Multiple
NC	No Condition
NEG	Negative
NFR	Not Field Replaceable
NO	Number
NOM	Nominal
NORM	Normal
NRM	Normal
NRZ	Nonreturn To Zero
PC PT	Piece Part
PLO	Phase Lock Oscillator
PED CAB	Pedestal Cabinet
PN	Part Number
POS	Positive
PWR	Power
RCVRS	Receivers
RD	Read
RDY	Ready
REC	Receiver
REF	Reference
REG	Register

ABBREVIATIONS (Contd)

REV	Reverse
RGTR	Register
RTM	Reserve Timer
RTZ	Return To Zero
S&IOABC	Sector and Index On A
S&IOBC	Sector and Index On B Cable
S/C	Series Code
SEC	Second
SEL	Select
SEQ	Sequence
SER	Servo
SH	Sheet
SOL	Solenoid
SR	Servo
SW	Switch
T	Track
TBS	To Be Supplied
TLA	Top Level Assembly
TP	Test Point
TRK	Track
TTL	Transistor Transistor Logic
UNI CAB	Universal Cabinet
UNREG	Unregulated
VCO	Voltage Controlled Oscillataor
W+R	Write Or Read
W•R	Write and Read
W/	With
W/O	Without
WRT	Write
WT	White
XDUCER	Transducer
XMTR	Transmitter

SECTION 1

INSTALLATION AND CHECKOUT

INSTALLATION AND CHECKOUT 1

INTRODUCTION

This section provides information pertaining to the installation and checkout of the storage module drive. Prior to performing any of the procedures contained in this section, become thoroughly familiar with the information contained in Section 2A, General Maintenance Information.

The information in this section is divided into the following major areas:

- Site Preparation - providing information necessary to layout an installation site.
- Packaging - providing information regarding shipment of the drive.
- Installation - providing instructions on the installation and interconnection of the drives.
- Checkout - providing instructions to ensure that the drive is functional.

SITE PREPARATION

GENERAL

Site preparation information is provided to enable a user to layout an installation site. Consideration is given to:

- Space and Clearance
- Environment
- Power (ac)
- Grounding
- Interconnect Cables and Terminators

The Installation Instructions, provided later in this section, are based on the assumption that the requirements specified in this paragraph have been met.

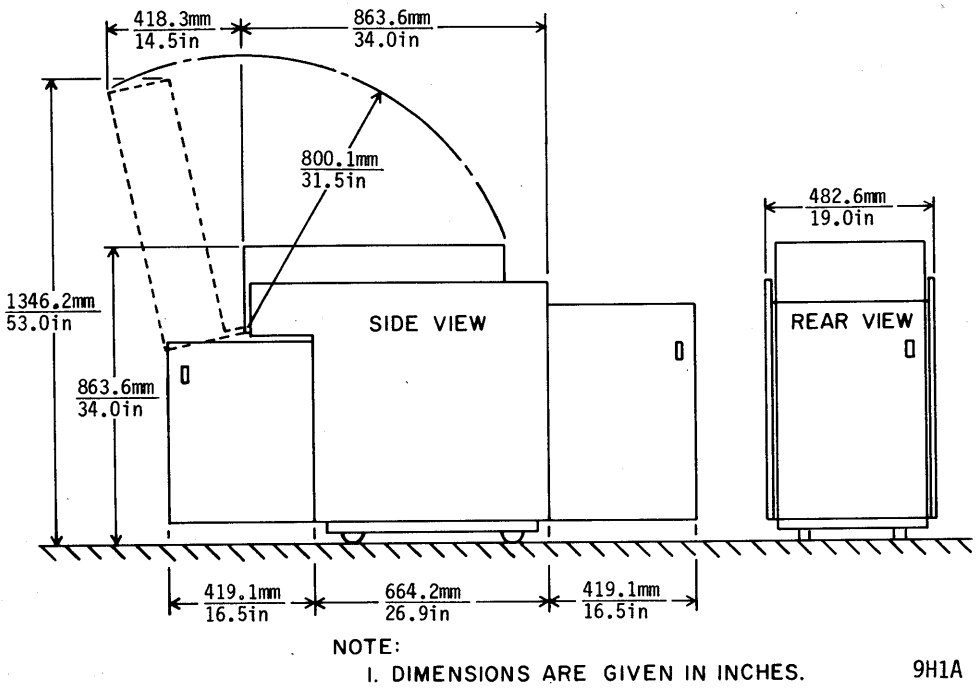

Figure 1-1. Clearances - Pedestal Cabinet

SPACE AND CLEARANCE

In the process of laying out the site, consideration must be given to the clearances required around each drive for maintenance purposes. All normal maintenance can be performed without removing the drive from its installed position. If there is enough room to fully open the top cover, there is enough room to perform all normal maintenance operations. Figures 1-1 through 1-5 illustrate the required clearances for each of the mounting configurations of the drive.

ENVIRONMENT

In laying out the site, consideration must be given to providing the proper environmental conditions. Environmental specifications for the drive are as specified in table 1-1.

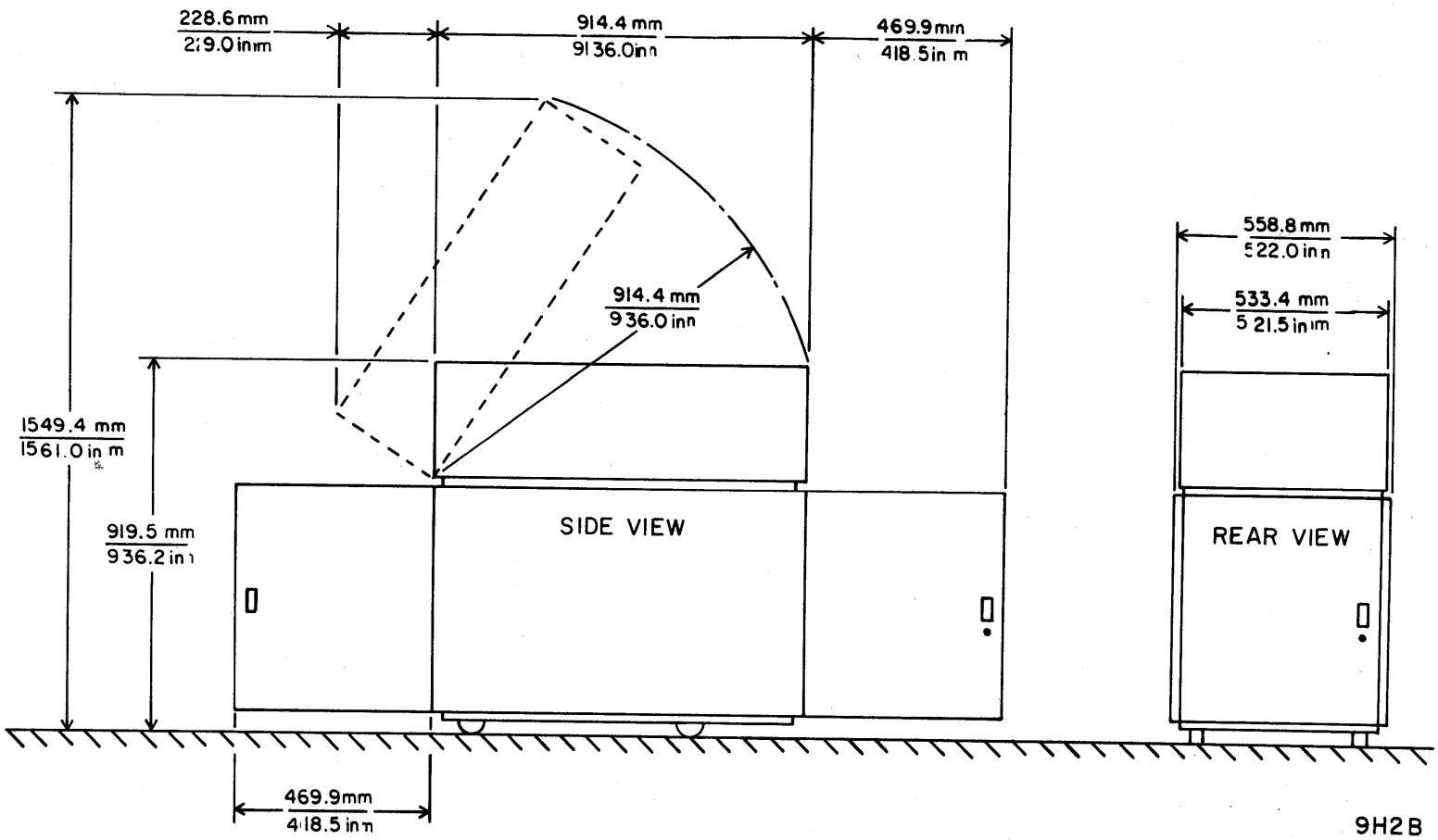

Figure 1-2. Clearances - Acoustic Cabinet

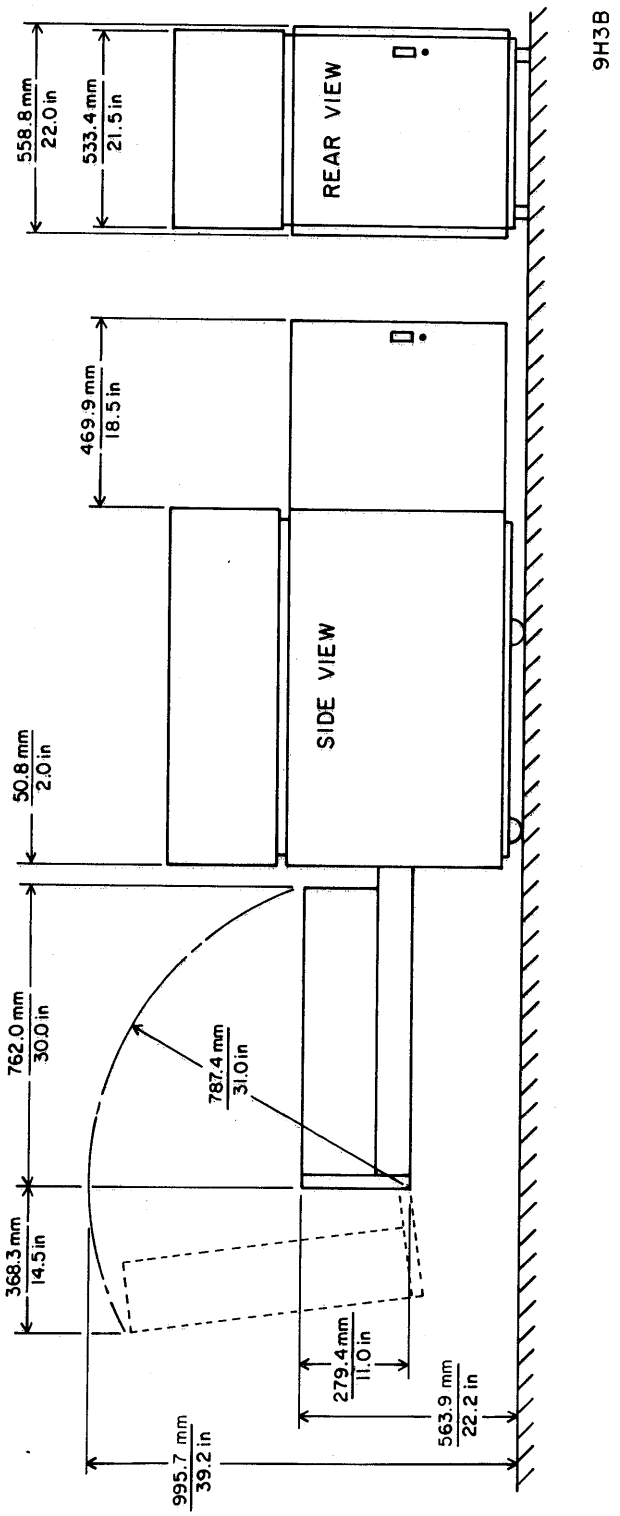

Figure 1-3. Clearances - Acoustic Drawer

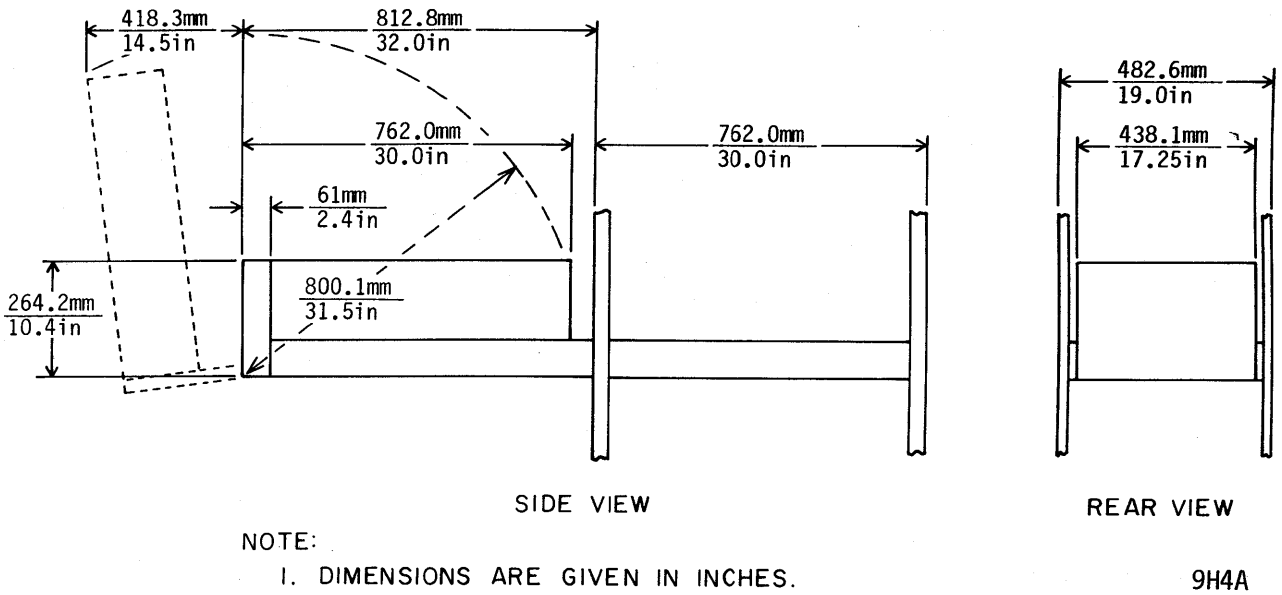

NOTE:

1. DIMENSIONS ARE GIVEN IN INCHES.

9H4A

Figure 1-4. Clearances - 30-Inch Rack

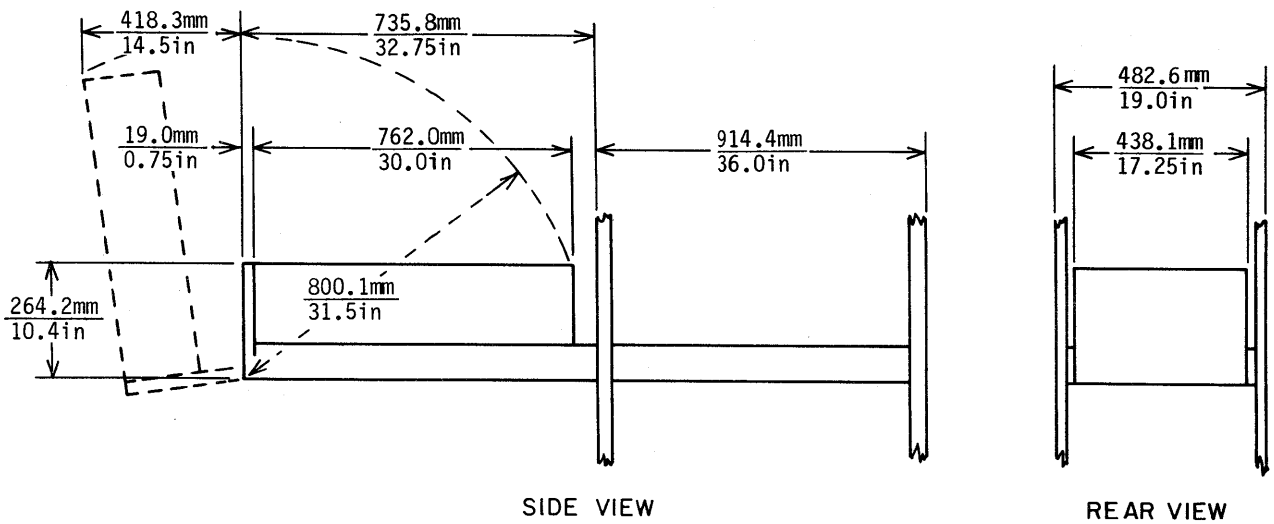

NOTE:

1. DIMENSIONS ARE GIVEN IN INCHES.

9H5A

Figure 1-5. Clearances - 36-Inch Rack Mount

TABLE 1-1. ENVIRONMENTAL SPECIFICATIONS

Characteristic	Condition	Specifications
Temperature	Operating	15° to 40° C (59° to 104° F) with a maximum gradient of 6.7° C (12° F) per hour
	Transit*	-40.4° to +70° C (-40° to +158° F)
Relative Humidity (No condensation)	Operating	20% to 80%
	Transit*	5% to 95%
Altitude	Operating	1305 to +2000 Meters (-1000 to +6500 Feet)
	Transit*	-305 to +4572 Meters (-1000 to +15,000 Feet)
*Unit packed for shipment.		

POWER REQUIREMENTS

Site layout includes providing an ac power source for each drive. Drives connect to this power source via a factory-supplied 2 m (6-ft) long cord.

Cords used on 60 Hz units have their own prewired power connectors. (See figure 1-6). Cords used on 50 Hz units are not supplied with connectors and must be wired at the site according to the following formula:

- Green wire to ground
  and
- All additional wires either phase to phase or phase to neutral

For information concerning power requirements, frequency, and current, refer to:

- Source Power Requirements - Table 1-2
- Maximum Current Source Requirements - Table 1-3
- Maximum Start-Up Time (Seconds) - Figure 1-7

NOTE

Drives cannot be converted from one frequency to another (50 Hz to 60 Hz for example) or from one voltage to another (100 V ac to 120 V ac) without making major mechanical changes. If such a conversion is necessary, contact your factory representative.

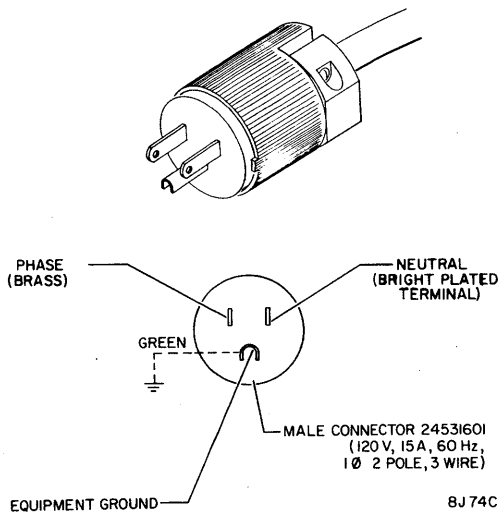

Figure 1-6. 60 Hz AC Power Connector

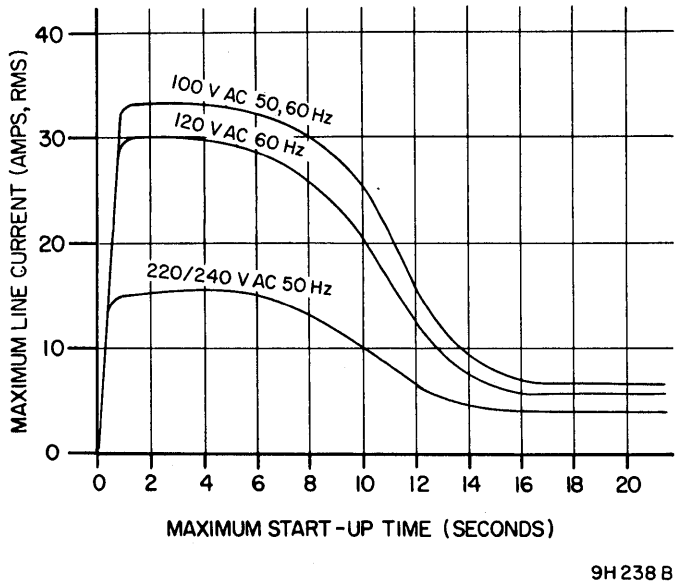

Figure 1-7. Start-up Current

TABLE 1-2. SOURCE POWER REQUIREMENTS

Voltage AC		Frequency Hz		Phase
Nominal	Range	Nominal	Range	
100	102 to 132	60	59.0 to 60.5	1
120	187 to 242	50	49.5 to 50.5	1
220	213 to 257	50	49.0 to 50.5	1
240	213 to 257	50	49.0 to 50.5	1

TABLE 1-3. MAXIMUM CURRENT SOURCE REQUIREMENTS

Power Source	Requirements					
VAC/Hz	Line Current In Amps		Power Factor		Consumption In KW (BTU/HR)	
	Operating	Standby	Operating	Standby	Operating	Standby
100/60	8.2	1.5	0.77	0.90	0.631	0.135
120/60	8.2	1.5	0.77	0.90	0.757	0.162
220/50	4.2	1.4	0.85	0.90	0.758	0.277
240/50	5.0	1.5	0.75	0.90	0.900	0.324

Operating - Carriage and disks in motion.

Standby - Disks not turning.

GROUNDING

Consideration must be given to providing an adequate grounding system when laying out the site. Failure to provide proper grounding may cause a safety hazard or may cause excessive data errors. To be properly grounded, the drive must have two ground connections; a safety ground, and a system ground. Grounding materials and procedures are provided in the Installation section of this manual.

Safety Ground

A safety ground must be provided by the site ac power system. The green (or green and yellow striped) wire in the drives cord provides the safety ground connection between the drive and the power system. In turn, the site ac power system must tie this connection (safety ground) to earth ground. All site ac power connection points must be maintained at the same safety ground potential.

System Ground

In addition to the safety ground, a system ground connection is also required. There are three alternative system ground connection schemes.

- Grounded Floor Grid - This scheme ties each equipment to a grid located beneath a false floor. The grid consists of horizontal and vertical members which are mechanically secure and have ground straps (or their equivalent) joining the individual members. The ground straps ensure a constant ground potential at all points on the grid. The grid is then tied directly to earth ground. This is the preferred scheme.

- Ungrounded Floor Grid - This scheme also ties each equipment to a grid beneath a false floor. This grid is mechanically secure and tied together with ground straps as described in the grounded floor grid discussion. However, in this case the floor grid is tied to earth ground through a controller or some other piece of equipment.

NOTE

The daisy chain scheme of grounding is not recommended for strings of more than ten equipments.

- Daisy Chain - This scheme connects each drive to the next in a string. The string is not to exceed ten drives. The string is terminated by connecting one of the drives to the controller which then connects to earth ground.

INTERCONNECT CABLES AND TERMINATORS

In laying out the site, consideration must be given to providing interconnect cables and terminators for the drives. There are I/O cables designated as A cable and B cable. Figure 1-8 illustrates two I/O cable configurations. The Star system requires A and B cables directly from the drive to each controller. It also requires an A cable terminator assembly at each drive. The Daisy chain system requires one B cable from each drive to the controller. However, only one A cable runs from the controller, and it runs to the first drive in the string. The remainder of the drives have A cables strung from the first drive to the second, from the second to the third, and so forth. In the Daisy chain system only the last drive in a string has a A cable terminator assembly.

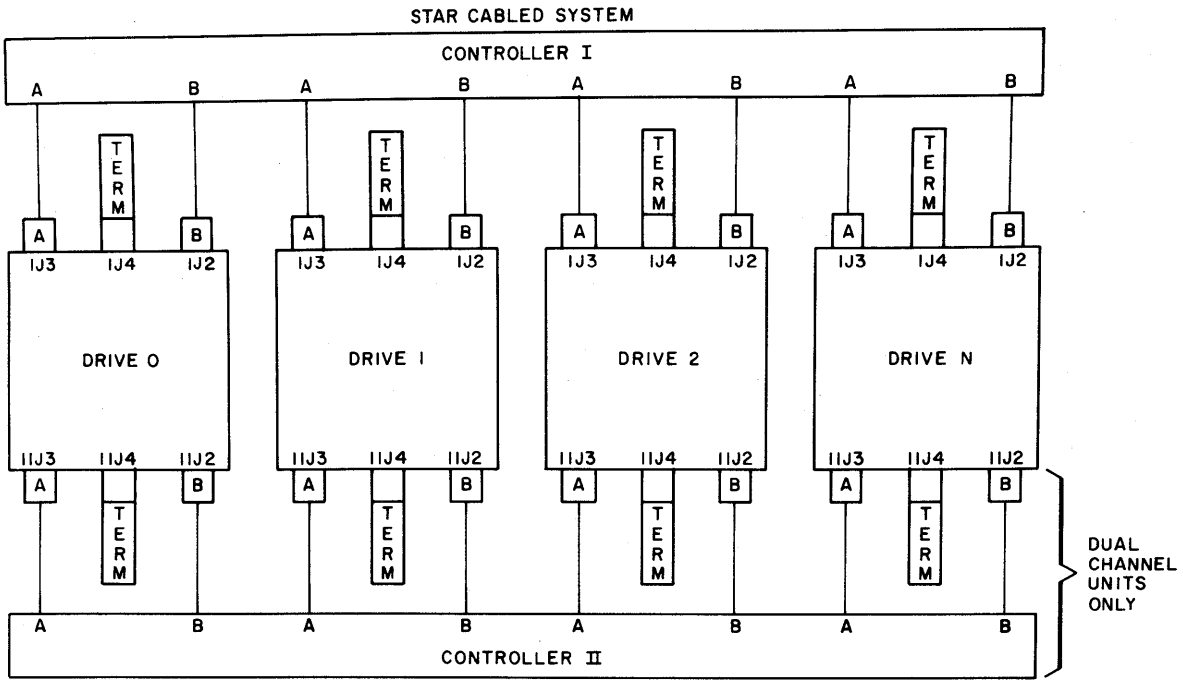

NOTES:

1. MAXIMUM INDIVIDUAL A CABLE LENGTHS = 100 FEET
2. MAXIMUM INDIVIDUAL B CABLE LENGTHS = 50 FEET

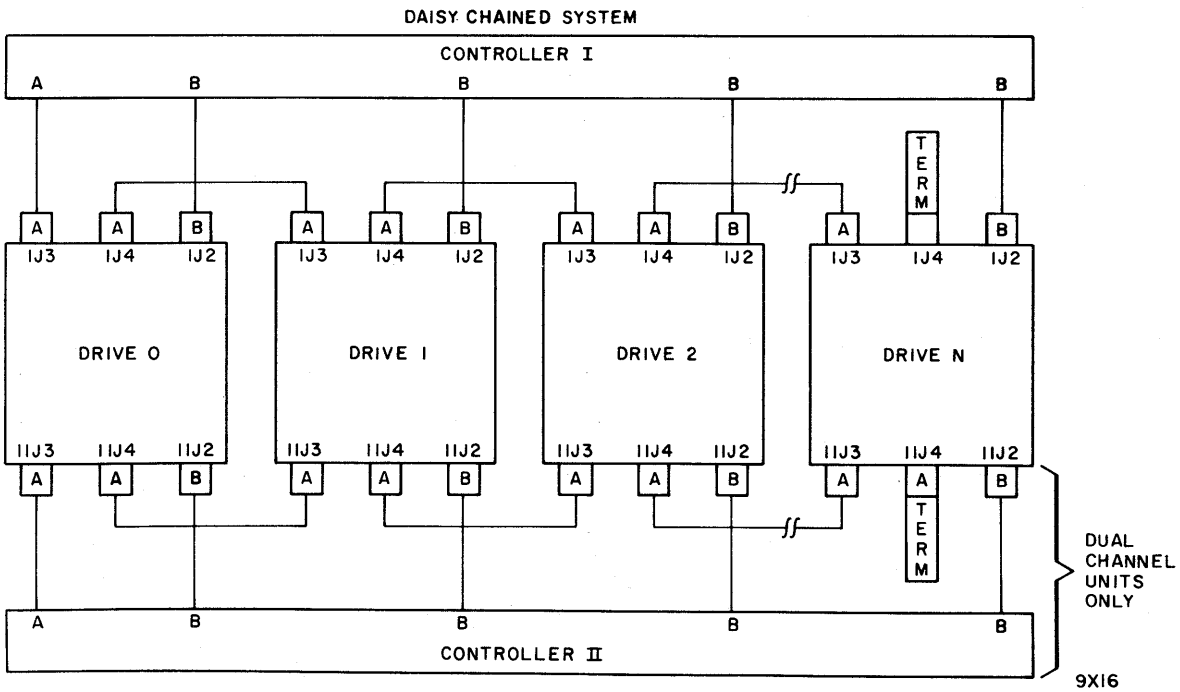

Figure 1-8. I/O Cable Configurations

Provide I/O cables and terminator assemblies for each drive consistent with the cabling configuration used. In figuring the length of the I/O cables, allow approximately 2 m (6 ft) of cable as a service loop for each drawer mount or rack mount drive. This is to allow the drive to be extended on the rails for maintenance purposes. In addition also consider the length of cable required to run from the drive I/O panel to the floor. This length will depend on the type of mounting used. Figures 1-5 and 1-6 define the A and B cables are provided in table 1-4. Figures 1-9 and 1-10 define the A and B cable requirements.

ROUTING SECTOR AND INDEX SIGNALS

Some drives can be wired to send the Index and Sector signals to the controller via either the A or the B cable. Other drives are able to carry these signals only on one cable or the other and cannot be changed.

Units that cannot be changed are those having Sector and Index only on the A cable (S&IOAC) or only on the B cable (S&IOBC).

Units that can be changed are all those having Sector and Index on both the A and B cables (S&IOABC), except BK5A6-G/H, BK5B5-N/P, and BK5C4-C/D. The following paragraphs describe the wiring of applicable S&IOABC units.

ROUTING SIGNALS TO A CABLE

Units will automatically send Sector & Index on the A cable. No change is necessary.

ROUTING SIGNALS TO B CABLE

With the main site ac power turned off and with drive's AC POWER and POWER SUPPLY circuit breakers set to OFF, proceed as follows:

1. Gain access to logic chassis and raise it to its maintenance position. (Refer to Accessing Drive For Maintenance in the General Maintenance section of this manual.)

2. Remove jumper plug from B07 on back panel.

3. Return logic chassis to normal operating position.

PACKAGING

Packaging of the drive consists of an outer container (made up of corrugated cardboard and wood) and internal blocking and holddown bolts. Carefully remove the outer container. Set aside the packing material for use during reshipment of the drive. Refer to the unpackaging instruction slip, which is inside the pack shroud area, for instructions on removal of the internal blocking and holddown bolts.
When the drive is to be shipped, it must be packaged as it was originally received from the factory.

If it is necessary to reship the drive, obtain packaging instructions from:

Packaging Engineer
Material Services Dept.
Normandale Division, MPI
7801 Computer Ave.
Minneapolis, Mn. 55435
Telephone Number 612/830-5462

When ordering packaging instructions, specify the exact equipment number and series code of the drive as shown on the equipment identification label.

INSTALLATION

GENERAL

Installation instructions are provided to enable the user to perform all necessary steps in the installation process. Within this section, reference is made to the opening and closing of various parts of the drive. Specific instructions as to how to do these procedures are given in Section 2A, General Maintenance. Likewise, removal and replacement information is not provided in this section. Instead, the reader is referred to the specific procedures providing this information in Section 2D, Repair and Replacement.

+ UNIT SELECT TAG	52
- UNIT SELECT TAG	22
+ UNIT SELECT BIT 0	53
- UNIT SELECT BIT 0	23
+ UNIT SELECT BIT 1	54
- UNIT SELECT BIT 1	24
+ UNIT SELECT BIT 2	56
- UNIT SELECT BIT 2	26
+ UNIT SELECT BIT 3	57
- UNIT SELECT BIT 3	27
+ TAG 1	31
- TAG 1	1
+ TAG 2	32
- TAG 2	2
+ TAG 3	33
- TAG 3	3
+ BIT 0	34
- BIT 0	4
+ BIT 1	35
- BIT 1	5
+ BIT 2	36
- BIT 2	6
+ BIT 3	37
- BIT 3	7
+ BIT 4	38
- BIT 4	8
+ BIT 5	39
- BIT 5	9
+ BIT 6	40
- BIT 6	10
+ BIT 7	41
- BIT 7	11
+ BIT 8	42
- BIT 8	12
+ BIT 9	43
- BIT 9	13
+ OPEN CABLE DETECTOR	44
- OPEN CABLE DETECTOR	14
+ INDEX (1)	48
- INDEX (1)	18
+ SECTOR (1)	55
- SECTOR (1)	25
+ FAULT	45
- FAULT	15
+ SEEK ERROR	46
- SEEK ERROR	16
+ ON CYLINDER	47
- ON CYLINDER	17
+ UNIT READY	49
- UNIT READY	19
+ ADDRESS MARK	50
- ADDRESS MARK	20
+ WRITE PROTECT	58
- WRITE PROTECT	28
- POWER SEQUENCE HOLD	59
- SEQUENCE PICK IN	29
+ BUSY (2)	51
- BUSY (2)	21
SPARE/GROUND (3)	60
SPARE/GROUND (3)	30

A CABLE APPLICABLE TO 60 PIN I/O

MATES WITH DRIVE

NOTES:

(1) MAY BE ON A CABLE, B CABLE, OR BOTH CABLES DEPENDING ON OPTION.

(2) DUAL CHANNEL UNITS ONLY.

(3) LINE MAY BE SPARE OR GROUND, DEPENDING ON UNIT TYPE.

9X17

Figure 1-9. A Cable Requirements - Sheet 1 of 2

+ UNIT SELECT TAG	52
- UNIT SELECT TAG	22
+ TAG 1	31
- TAG 1	1
+ TAG 2	32
- TAG 2	2
+ TAG 3	33
- TAG 3	3
+ BIT 0	34
- BIT 0	4
+ BIT 1	35
- BIT 1	5
+ BIT 2	36
- BIT 2	6
+ BIT 3	37
- BIT 3	7
+ BIT 4	38
- BIT 4	8
+ BIT 5	39
- BIT 5	9
+ BIT 6	40
- BIT 6	10
+ BIT 7	41
- BIT 7	11
+ BIT 8	42
- BIT 8	12
+ BIT 9	43
- BIT 9	13
+ OPEN CABLE DETECTOR	44
- OPEN CABLE DETECTOR	14
+ INDEX	48
- INDEX	18
+ SECTOR	55
- SECTOR	25
+ FAULT	45
- FAULT	15
+ SEEK ERROR	46
- SEEK ERROR	16
+ ON CYLINDER	47
- ON CYLINDER	17
+ UNIT READY	49
- UNIT READY	19
+ ADDRESS MARK	50
- ADDRESS MARK	20
+ WRITE PROTECT	53
- WRITE PROTECT	23
- POWER SEQUENCE HOLD	54
- SEQUENCE PICK IN	24
+ BUSY ⚠1	51
- BUSY ⚠1	21

A CABLE APPLICABLE TO 50 PIN I/O

MATES WITH DRIVE

NOTES:

⚠1 DUAL CHANNEL UNITS ONLY.

9X18

Figure 1-9. A Cable Requirements - Sheet 2

Since the specific order of the installation steps is largely dependent on the mounting configuration of the drives and how the site is layed out, it is not possible to exactly specify which order to follow. However, all necessary procedures for each configuration are specified in table 1-5. Generally, the procedures are listed in the order in which they should be performed.

NOTE

Make sure temperature gradients are not exceeded during installation. Refer to table 1-1.

TABLE 1-4. I/O CABLE LENGTHS VS PART NUMBERS

Cable Length (M)	FT	Cable Type and Part Numbers A Cable	B Cable
(1.5)	5	77564200	77564300
(1.8)	6	77564201	77564301
(2.4)	8	77564202	77564302
(3.)	10	77564203	77564303
(4.6)	15	77564204	77564304
(6.1)	20	77564205	77564305
(7.6)	25	77564206	77564306
(9.)	30	77564207	77564307
(12.)	40	77564208	77564308
(15.)	50	77564209	77564309

INSTALLATION INSPECTION

Perform the following inspection prior to installing the drive.

1. Inspect drive for possible shipping damage. Any claim for this type of damage should be filed promptly with the transporter involved. If a claim is filed, save the original shipping materials.

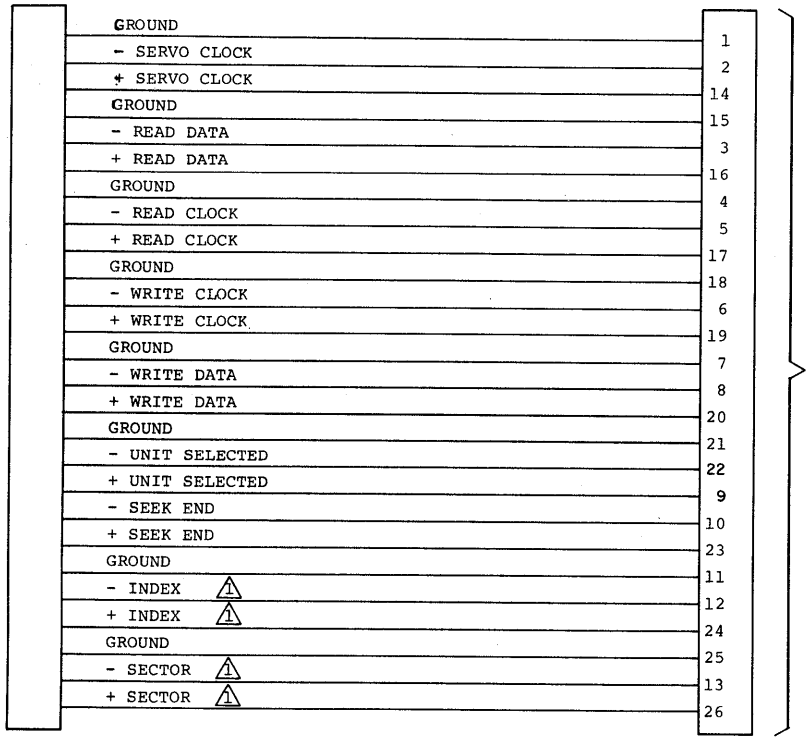

NOTES:

1 MAY BE ON A CABLE, B CABLE, OR BOTH CABLES DEPENDING ON OPTION.

9H7C

Figure 1-10. B Cable Requirements

2. Verify that all logic cards are firmly seated in logic chassis and power supply.

3. Verify that the control panel is firmly seated in shroud.

4. Verify that all connectors are firmly seated.

5. Raise deck and verify that all cabling is intact and that there are no broken or damaged wires.

6. Check entire drive for presence of foreign material which could cause an electrical short.

7. Check actuator and pack area for presence of material which could obstruct movement of carriage and heads.

8. Ensure that carriage locking pin and ring assembly is moved from SHIPPING LOCK hole to PIN STORAGE hole.

CABINET LEVELING

Cabinet leveling should not be performed until drive is in final location and there is no further necessity to move it. It may be advantageous to install leveling pads prior to installation of other equipment in the cabinet or the connection of cabling.

Cabinet leveling consists of installing leveling pads (leveling pads are shipped in a plastic bag taped to inside of cabinet), placing drive in final location, screwing down leveling pads until drive in aligned with other equipments, and ensuring weight is off casters.

1. Install jam nut on each leveling pad and install a leveling pad at each corner of cabinet frame (see figure 1-11) by raising corner of cabinet and threading leveler into weld nut on frame.

2. Locate drive in final postion.

3. Turn leveling pads down until they support drives' weight.

4. Adjust leveling pads until drive is aligned with adjacent equipment.

5. Place spirit level on drive case assembly and adjust leveling pads until drive is level within three angular degrees both front to back and side to side.

6. When drive is level in both directions, tighten jam nut against bottom of frame.

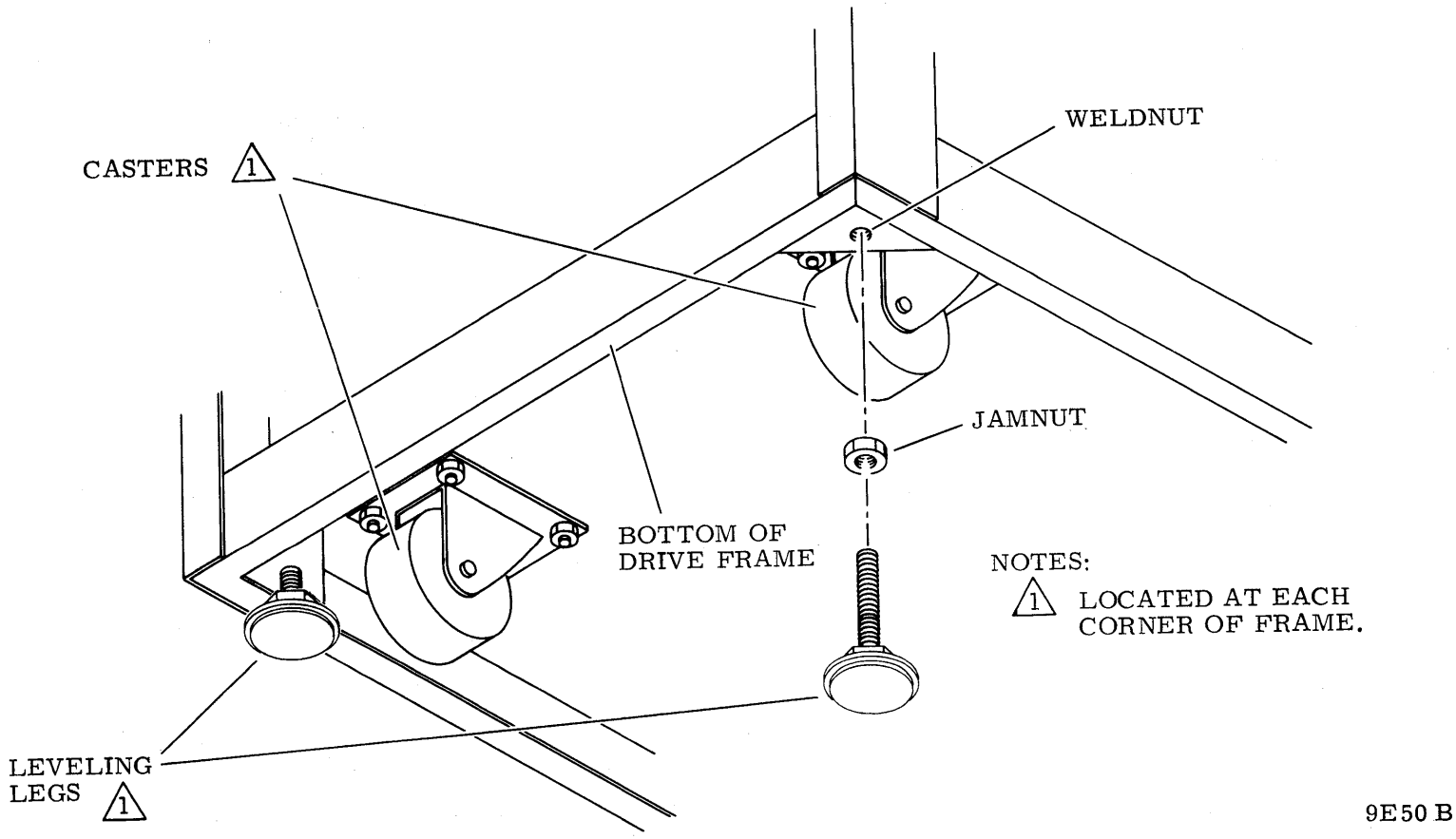

Figure 1-11. Leveling Pad Installation

Cabinet Modification

Cabinet modification applies only to acoustic cabinet units. This procedure provides the information necessary to install an acoustic drawer in an existing acoustic cabinet. It is assumed that all power, ground and signal cables have been removed from the top mounted drive; and that the drive has been moved to a work area where it can be approached from all sides.

1. Remove left and right side panels and set aside for future installation.

2. Disconnect fan connector P400.

3. Remove and discard rear door assembly.

4. Remove and discard front door assembly, upper and lower hinges, and keeper latch.

NOTE

A convenient support for ballast installation is made by laying two 2 x 4s flat on floor and covering them with a piece of 1/2 inch plywood.

5. Position ballast beneath frame (see figure 3-4). Using four screws, lock washers, and flat washers, secure ballast to frame.

6. Install upper and lower front panels using attaching hardware as shown in figure 3-4. Ensure that ground cable is attached to lower front panel.

7. Loosely install keeper latch using attaching hardware as shown in figure 3-4.

8. Perform Slide Installation Procedure (see Section 2D, Repair and Replacement) with the following exceptions: Before installing side panels, install case assembly and then slide drive to its closed position. Tighten hardware securing keeper latches. This ensures that latches are properly aligned to case. When keeper latches are tightened, install side panels.

9. Roll drive back to permanent location and perform Cabinet Leveling Procedure (this section).

10. Perform Cable and Terminator Installation Procedure and Setting Sector Select Switches Procedure (both in this section).

TABLE 1-5. INSTALLATION PROCEDURES

Procedure	Mounting Configuration				
	Ped Cab	Acoustic Cab	Acoustic Drawer	30" Rack	36" Rack
Installation Inspection	X	X	X	X	X
Cabinet Leveling	X	X			
Cabinet Modification			X		
Slide Installation				X	X
Latch Installation				X	X
Cable & Terminator Installation	X	X	X	X	X
Setting Sector Switch	X	X	X	X	X

SLIDE INSTALLATION

When installing drives in an equipment rack, it is first necessary to install the slide assemblies in the rack. Refer to the Slide Installation Procedure in Section 2D, Repair and Replacement, for all necessary instructions.

LATCH INSTALLATION

A set of keeper latches are required with each slide mounted drive. Install the keeper latches to the rack as illustrated in figure 3-5 or 3-6. Latch orientation, as well as attaching hardware, are shown in the illustration. No latch adjustment is required.

CABLE AND TERMINATOR INSTALLATION

Cable installation consists of connecting the system ground cable, connecting the drive to the site ac power system, and connecting the I/O cables and terminators. It is assumed that the site has been prepared in accordance with the site preparation information provided earlier in this section. Refer to table 1-6 for grounding accessory part numbers and to figure 1-12 for parts location view. With the main site ac power turned off and with the drives AC POWER and POWER SUPPLY circuit breakers set to OFF, proceed as follows:

1. Open case assembly to gain access to power panel and I/O connectors.

2. Cut a piece of flat braided shielding to required length. Shielding must be long enough to run from drives ground lug to floor grid or next drive depending on system grounding scheme.

3. Crimp and solder terminal lug to each end of braided shielding to make ground cable.

4. Connect one end of completed ground cable to ground lug on rear on drive.

5. Connect opposite end of ground cable to floor grid (or next drive).

6. Referring to figure 1-12 for parts location ensure that input power wiring to TB1 conforms to site ac power as shown in figure 1-13.

7. Connect drives power cord to site ac power source.

NOTE

Some systems may require that specific connectors on the controller relate to specific physical drives. Consult controller manual for information relating to I/O connections.

8. Connect B cable between controller and drive connector IJ2. For dual channel drives connect a second B cable between channel II controller and drive connector IIJ2.

NOTE

Steps 9 and 10 apply only to systems using star I/O cabling configuration.

9. Connect A cable from controller to drive connector IJ3. For dual channel drives connect a second A cable from channel II controller to drive connector IIJ3.

NOTE

Drives cannot be converted from one frequency to another (50 Hz to 60 Hz for example) or from one voltage to another (100 V ac to 120 V ac) without making major mechanical changes. If such a conversion is necessary, contact your factory representative.

10. Install terminator card in location C1. For dual channel drives install a second terminator card in location C2.

NOTE

Steps 11 through 13 apply only to systems using daisy chain I/O cabling configuration.

11. Connect A cable from controller or connector IJ4 on upstream drive (drive which is closer to controller on daisy chain) to drive connector IJ3. For dual channel drives connect a second A cable from channel II controller or upstream drive to drive connector IIJ3.

NOTE

If drive is not last in daisy chain string, perform step 12. If drive is last in daisy chain string, perform step 13.

12. Connect another A cable from drive connector IJ4 to down stream drives connector IJ3. For dual channel drives connect another A cable from drive connector IIJ4 to down stream drives connector IIJ3.

13. Install terminator card in location C1. For dual channel drives install a second terminator card in location C2.

SETTING SECTOR SELECT SWITCHES

The number of sectors per revolution generated by the drive logic must be matched to that required by the controller. Therefore, sector select switches are provided in the drive logic to allow selection of different sector counts. These switches are located on logic card A2B08 and appear as shown in figure 1-14.

Refer to the subsystem reference manual to determine the number of sectors required by the controller; and then located that number in table 1-7. Across from the number of sectors listed in the table is a row of Cs and Os. C represents the Closed or On position of the secotr switch. O represents the Open or Off position of the sector switch. Set the switches to the positions designated in the table while referring to figure 1-14 for an illustration of the switch positions.

The switch settings listed in table 1-7 have been determined from a formula. Use of this formula is demonstrated below to provide the user with an additional tool for determining sector switch settings.

TABLE 1-6. GROUNDING ACCESSORIES

Description	Part Number	Use
Flat Braided Shielding 15 m (50 ft)	93267009	Construct ground cable
Terminal Lug	40125601	Terminates ground cable to drive and floor grid.
Lockwasher, external tooth, No. 10	10126402	Attaching ground cable to floor grid.
Screw, Pan head, Cross Recessed, self tapping 10-32 x 1/2	17901524	Attaching ground cable to floor grid.

Each sector will contain a certain number of dibits (received from the servo tracks). The number of dibits in each sector is the result of the number of sectors required by the controller. Thus:

$$\text{Total Dibits per Sector} = \frac{13\ 440}{\text{Number of Sectors}} - 1$$

NOTE

Ignore any remainder in the calculation. However, the existence of a remainder adds a "short" sector before index.

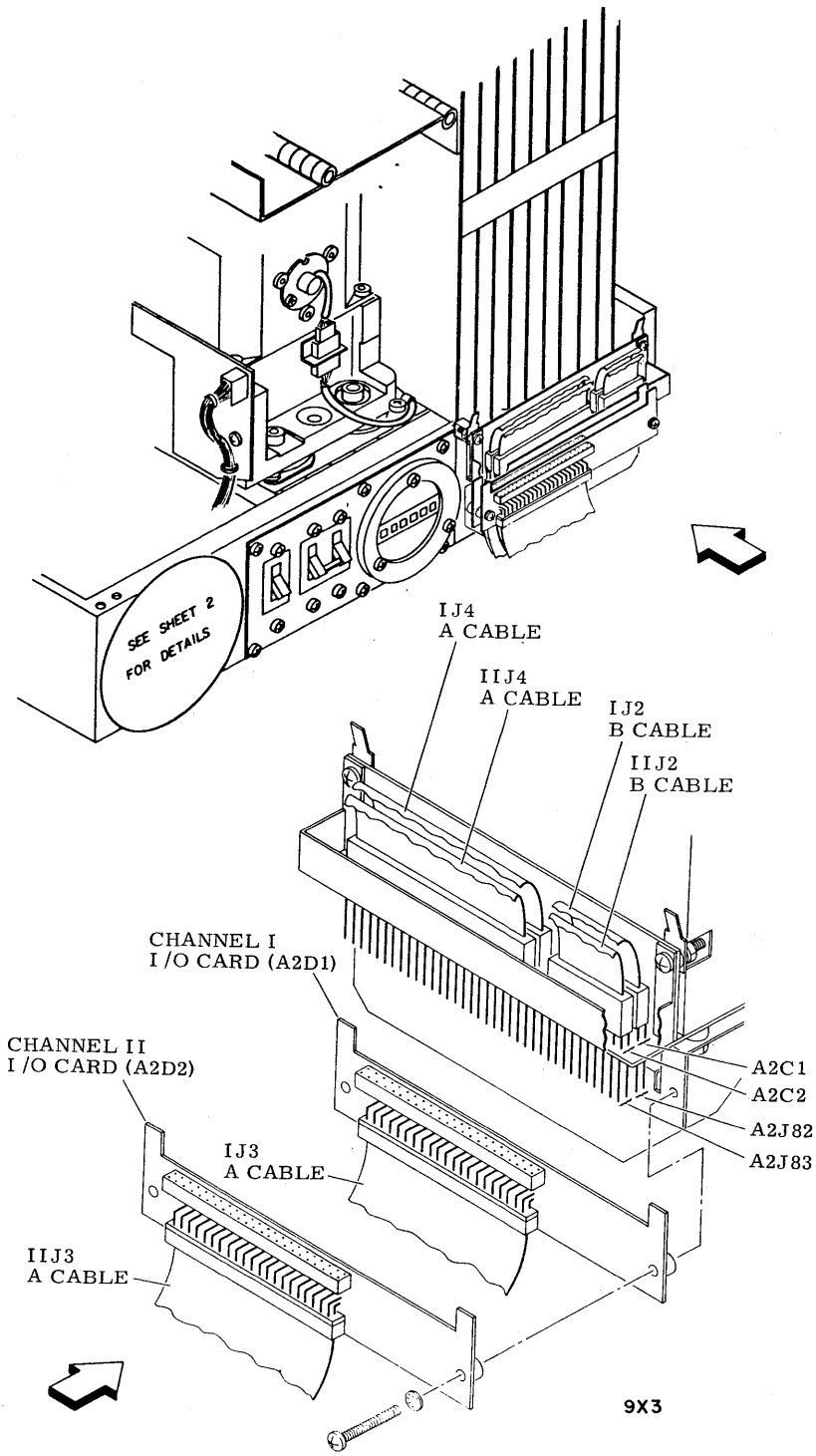

Figure 1-12. Cable Installation - Parts Location View
(Sheet 1 of 2)

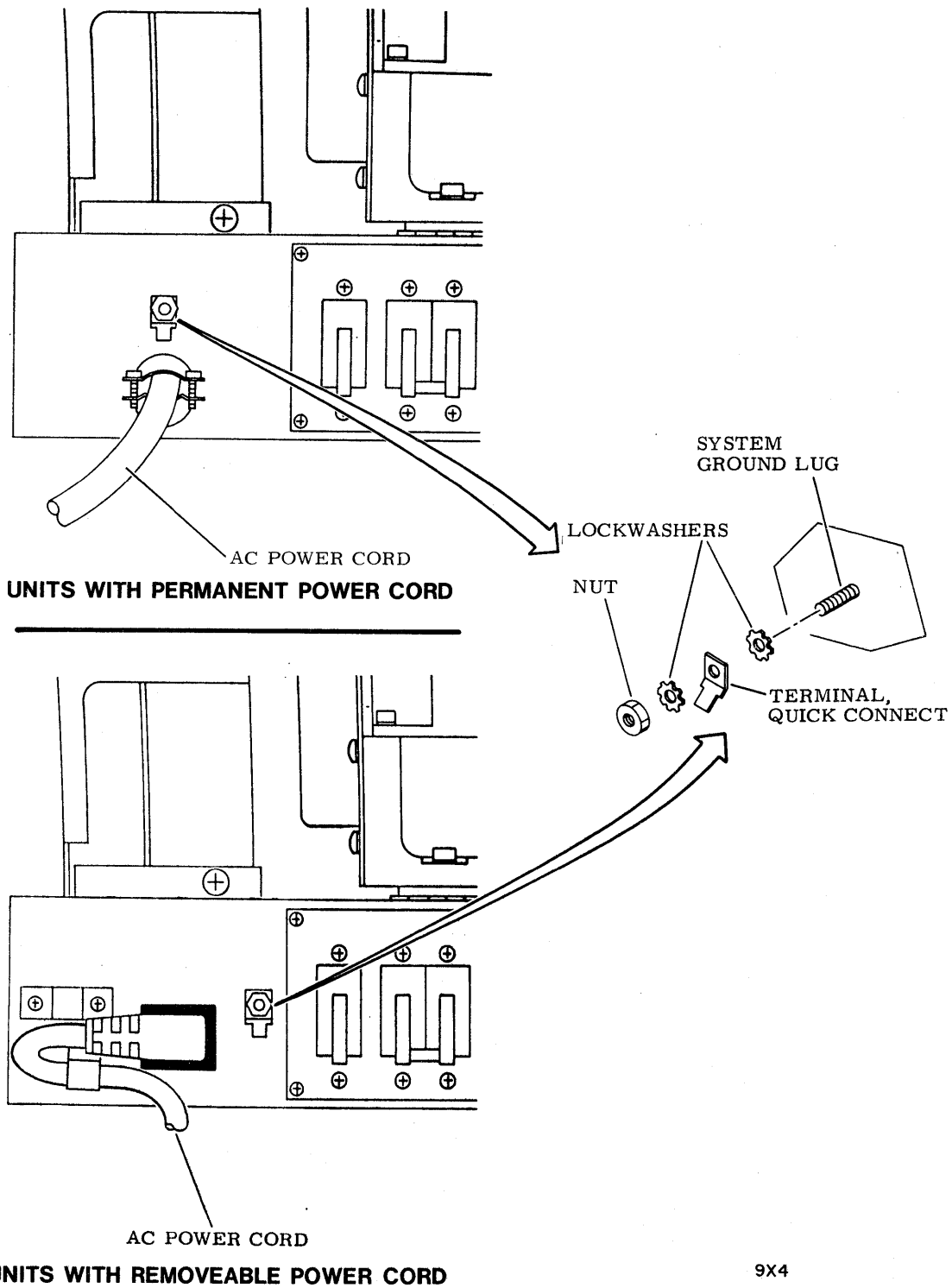

Figure 1-12. Cable Installation - Parts Location View
(Sheet 2)

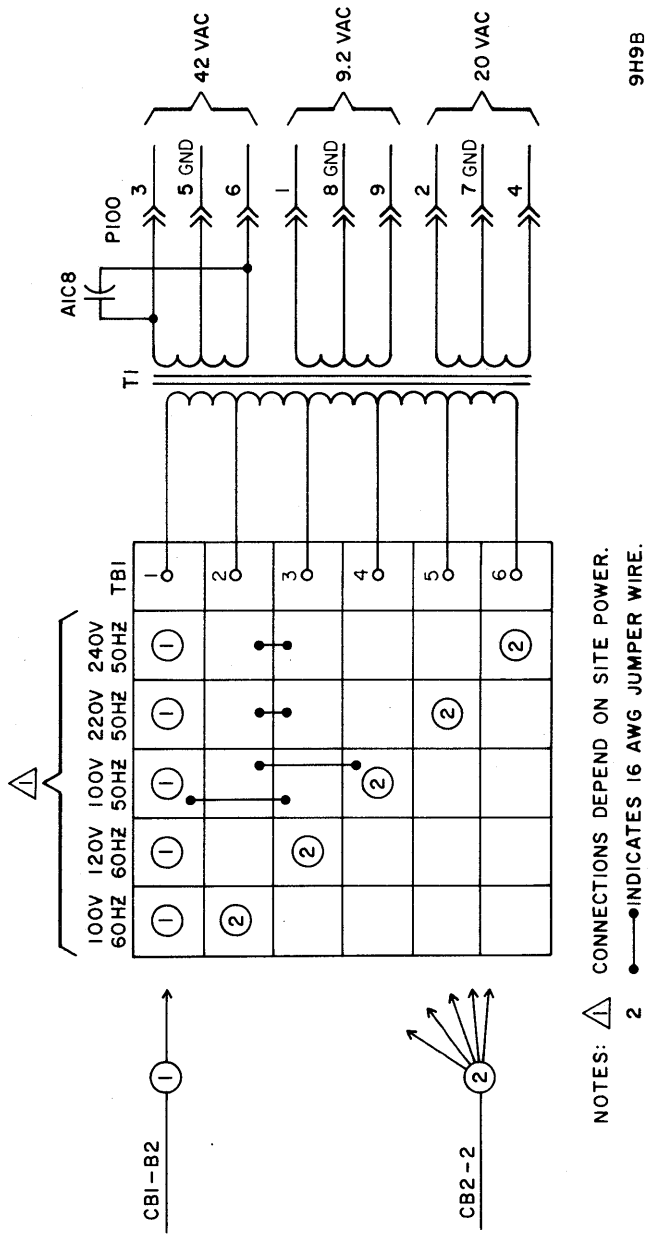

Figure 1-13. AC Power Wiring

Each sector switch represents a binary and decimal value of dibits (as counted in the logic). The values related to each switch are as follows:

Switch No.	Binary Value	Decimal Value
0	2^0	1
1	2^1	2
2	2^2	4
3	2^3	8
4	2^4	16
5	2^5	32
6	2^6	64
7	2^7	128
8	2^8	256
9	2^9	512
10	2^{10}	1024
11	2^{11}	2048

Here is an example of determining the switch settings for selecting 63 sectors:

$$\text{Total Dibits per Sector} = \frac{13\ 440}{63} - 1 = 212$$

NOTE

Remainder is ignored.

Determine which switches to place in the Closed or On position as follows:

Total Dibits per sector	212
Dibits selected by switch 7	128
(Difference)	84
Dibits selected by switch 6	64
(Difference)	20
Dibits selected by switch 4	16
(Difference)	4
Dibits selected by switch 2	4
(Difference)	0

Thus, placing switches 2, 4, 6, and 7 in the Closed or On position selects 63 sectors of 212 dibits per sector. Since a remainder existed in the calculation formula, an additional "short" sector of 21 Sector Clock pulses (806 kHz) will be present just before index.

CHECKOUT

When installation of drive is complete, perform the General Cleaning and the Clean Shroud and Spindle procedures found in the preventive maintenance section. Following the cleaning procedures, perform all the procedures in the tests and adjustments section.

Refer to system manuals for any system diagnostics which may be required.

ROCKER-TYPE SWITCHES

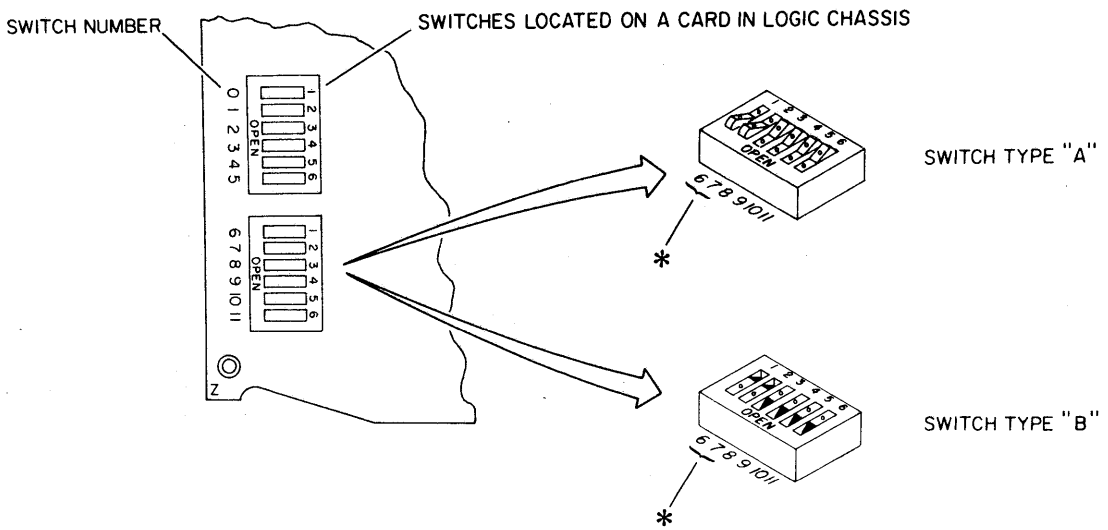

ROCKER-TYPE SWITCHES:

TO ACTUATE A SWITCH TO ITS CLOSED POSITION,
PRESS ON END OF SWITCH FARTHEST FROM "OPEN" LETTERING.

* SWITCHES 6 AND 7 SHOWN IN CLOSED POSITION.

SLIDE-TYPE SWITCHES

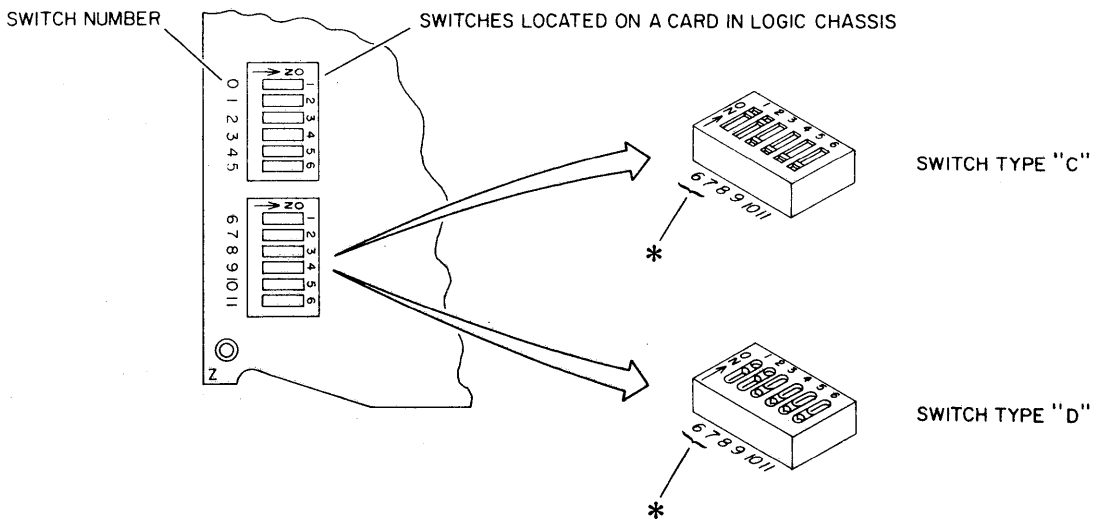

SLIDE-TYPE SWITCHES:

TO ACTUATE A SWITCH TO ITS ON POSITION,
SLIDE SWITCH IN DIRECTION OF ARROW SHOWN ON SWITCH.

* SWITCHES 6 AND 7 SHOWN IN ON POSITION.

9X19

Figure 1-14. Sector Select Switches

TABLE 1-7. SECTOR SELECT SWITCH SETTINGS

Number of Sectors	Switch Number											
	0	1	2	3	4	5	6	7	8	9	10	11
4	C	C	C	C	C	O	O	O	C	O	C	C
5	C	C	C	C	C	C	C	O	O	C	O	C
6	C	C	C	C	C	C	O	C	O	O	O	C
7	C	C	C	C	C	C	C	O	C	C	C	O
8	C	C	C	C	O	O	O	C	O	C	C	O
9	O	O	C	O	C	O	C	C	C	O	C	O
10	C	C	C	C	C	C	O	O	C	O	C	O
11	O	O	C	O	O	O	C	C	O	O	C	O
12	C	C	C	C	C	O	C	O	O	O	C	O
13	O	O	O	C	O	O	O	O	O	O	C	O
14	C	C	C	C	C	C	O	C	C	C	O	O
15	C	C	C	C	C	C	C	O	C	C	O	O
16	C	C	C	O	O	O	C	O	C	C	O	O
17	C	O	C	O	C	O	O	O	C	C	O	O
18	C	O	O	C	O	C	C	C	O	C	O	O
19	O	C	O	O	O	O	C	C	O	C	O	O
20	C	C	C	C	C	O	O	C	O	C	O	O
21	C	C	C	C	C	C	C	O	O	C	O	O
22	C	O	O	O	O	C	C	O	O	C	O	O
23	C	C	C	O	O	O	C	O	O	C	O	O
24	C	C	C	C	O	C	O	O	O	C	O	O
25	O	O	O	C	C	O	O	O	O	C	O	O
26	C	C	O	O	O	O	O	O	O	C	O	O
27	O	O	O	O	C	C	C	C	C	O	O	O

Table Continued on Next Page

TABLE 1-7. SECTOR SELECT SWITCH SETTINGS (Contd)

Number of Sectors	Switch Number											
	0	1	2	3	4	5	6	7	8	9	10	11
28	C	C	C	C	C	O	C	C	C	O	O	O
29	O	C	C	C	O	O	C	C	C	O	O	O
30	C	C	C	C	C	C	O	C	C	O	O	O
31	O	O	O	O	C	C	O	C	C	O	O	O
32	C	C	O	O	O	C	O	C	C	O	O	O
33	O	C	C	O	C	O	O	C	C	O	O	O
34	O	C	O	C	O	O	O	C	C	O	O	O
35	C	C	C	C	C	C	C	O	C	O	O	O
36	O	O	C	O	C	C	C	O	C	O	O	O
37	O	C	O	C	O	C	C	O	C	O	O	O
38	O	O	O	O	O	C	C	O	C	O	O	O
39	C	C	C	O	C	O	C	O	C	O	O	O
40	C	C	C	C	O	O	C	O	C	O	O	O
41	O	C	C	O	O	O	C	O	C	O	O	O
42	C	C	C	C	C	C	O	O	C	O	O	O
43	C	C	C	O	C	C	O	O	C	O	O	O
44	O	O	O	O	C	C	O	O	C	O	O	O
45	C	O	O	C	O	C	O	O	C	O	O	O
46	C	C	O	O	O	C	O	O	C	O	O	O
47	O	O	C	C	C	O	O	O	C	O	O	O
48	C	C	C	O	C	O	O	O	C	O	O	O
49	C	O	O	O	C	O	O	O	C	O	O	O
50	C	C	O	C	O	O	O	O	C	O	O	O
51	O	C	C	O	O	O	O	O	C	O	O	O

Table Continued on Next Page

TABLE 1-7. SECTOR SELECT SWITCH SETTINGS (Contd)

Number of Sectors	Switch Number											
	0	1	2	3	4	5	6	7	8	9	10	11
52	C	O	O	O	O	O	O	O	C	O	O	O
53	O	O	C	C	C	C	C	C	O	O	O	O
54	C	C	C	O	C	C	C	C	O	O	O	O
55	C	C	O	O	C	C	C	C	O	O	O	O
56	C	C	C	C	O	C	C	C	O	O	O	O
57	O	C	O	C	O	C	C	C	O	O	O	O
58	O	C	C	O	O	C	C	C	O	O	O	O
59	O	C	O	O	O	C	C	C	O	O	O	O
60	C	C	C	C	C	O	C	C	O	O	O	O
61	C	C	O	C	C	O	C	C	O	O	O	O
62	C	C	C	O	C	O	C	C	O	O	O	O
63	O	O	C	O	C	O	C	C	O	O	O	O
64	C	O	O	O	C	O	C	C	O	O	O	O
65	C	O	C	C	O	O	C	C	O	O	O	O
66	O	C	O	C	O	O	C	C	O	O	O	O
67	C	C	C	O	O	O	C	C	O	O	O	O
68	O	O	C	O	O	O	C	C	O	O	O	O
69	C	O	O	O	O	O	C	C	O	O	O	O
70	C	C	C	C	C	C	O	C	O	O	O	O
71	O	O	C	C	C	C	O	C	O	O	O	O
72	C	O	O	C	C	C	O	C	O	O	O	O
73	C	C	C	O	C	C	O	C	O	O	O	O
74	O	O	C	O	C	C	O	C	O	O	O	O
75	O	C	O	O	C	C	O	C	O	O	O	O

Table Continued on Next Page

TABLE 1-7. SECTOR SELECT SWITCH SETTINGS (Contd)

Number of Sectors	Switch Number											
	0	1	2	3	4	5	6	7	8	9	10	11
76	C	C	C	C	O	C	O	C	O	O	O	O
77	C	O	C	C	O	C	O	C	O	O	O	O
78	C	C	O	C	O	C	O	C	O	O	O	O
79	C	O	O	C	O	C	O	C	O	O	O	O
80	C	C	C	O	O	C	O	C	O	O	O	O
81	O	O	C	O	O	C	O	C	O	O	O	O
82	O	C	O	O	O	C	O	C	O	O	O	O
83	O	O	O	O	O	C	O	C	O	O	O	O
84	C	C	C	C	C	O	O	C	O	O	O	O
85	C	O	C	C	C	O	O	C	O	O	O	O
86	C	C	O	C	C	O	O	C	O	O	O	O
87	C	O	O	C	C	O	O	C	O	O	O	O
88	C	C	C	O	C	O	O	C	O	O	O	O
89	O	C	C	O	C	O	O	C	O	O	O	O
90	O	O	C	O	C	O	O	C	O	O	O	O
91	O	C	O	O	C	O	O	C	O	O	O	O
92	C	O	O	O	C	O	O	C	O	O	O	O
93	C	C	C	C	O	O	O	C	O	O	O	O
94	C	O	C	C	O	O	O	C	O	O	O	O
95	O	O	C	C	O	O	O	C	O	O	O	O
96	C	C	O	C	O	O	O	C	O	O	O	O
97	C	O	O	C	O	O	O	C	O	O	O	O
98	O	O	O	C	O	O	O	C	O	O	O	O
99	O	C	C	O	O	O	O	C	O	O	O	O

Table Continued on Next Page

TABLE 1-7. SECTOR SELECT SWITCH SETTINGS (Contd)

Number of Sectors	Switch Number											
	0	1	2	3	4	5	6	7	8	9	10	11
100	C	O	C	O	O	O	O	C	O	O	O	O
101	O	O	C	O	O	O	O	C	O	O	O	O
102	O	C	O	O	O	O	O	C	O	O	O	O
103	C	O	O	O	O	O	O	C	O	O	O	O
104	O	O	O	O	O	O	O	C	O	O	O	O
105	C	C	C	C	C	C	C	O	O	O	O	O
106	C	O	C	C	C	C	C	O	O	O	O	O
107	O	O	C	C	C	C	C	O	O	O	O	O
108	C	C	O	C	C	C	C	O	O	O	O	O
109	O	C	O	C	C	C	C	O	O	O	O	O
110	C	O	O	C	C	C	C	O	O	O	O	O
111	O	O	O	C	C	C	C	O	O	O	O	O
112	C	C	C	O	C	C	C	O	O	O	O	O
113	C	O	C	O	C	C	C	O	O	O	O	O
114	O	O	C	O	C	C	C	O	O	O	O	O
115	C	C	O	O	C	C	C	O	O	O	O	O
116	O	C	O	O	C	C	C	O	O	O	O	O
117	C	O	O	O	C	C	C	O	O	O	O	O
118	O	O	O	O	C	C	C	O	O	O	O	O
119	C	C	C	C	O	C	C	O	O	O	O	O
120	C	C	C	C	O	C	C	O	O	O	O	O
121	O	C	C	C	O	C	C	O	O	O	O	O
122	C	O	C	C	O	C	C	O	O	O	O	O
123	O	O	C	C	O	C	C	O	O	O	O	O

Table Continued on Next Page

TABLE 1-7. SECTOR SELECT SWITCH SETTINGS (Contd)

Number of Sectors	Switch Number											
	0	1	2	3	4	5	6	7	8	9	10	11
124	C	C	O	C	O	C	C	O	O	O	O	O
125	O	C	O	C	O	C	C	O	O	O	O	O
126	C	O	O	C	O	C	C	O	O	O	O	O
127	O	O	O	C	O	C	C	O	O	O	O	O
128	O	O	O	C	O	C	C	O	O	O	O	O

Note: C = Closed or On position; O = Open or Off position.

STEP 1. DETERMINE SECTOR LENGTH FOR SYSTEM USING 63 SECTORS.

SL = 13440/63

SL = 213 PLUS REMAINDER 21 △1

STEP 2. DETERMINE PRESET VALUE FOR SWITCHES.

PV = 4096 - 213 (REMAINDER IS IGNORED)

PV = 3883

STEP 3. DETERMINE WHICH SWITCHES TO SET TO OPEN POSITION.

PV =	3883	
-	2048	Switch 11 value
	1835	
-	1024	Switch 10 value
	811	
-	512	Switch 9 value
	299	
-	256	Switch 8 value
	43	
-	32	Switch 5 value
	11	
-	8	Switch 3 value
	3	
-	2	Switch 1 value
	1	
-	1	Switch 0 value
	0	

STEP 4. SET SWITCH 0, 1, 3, 5, 8, 9, 10, and 11 TO OPEN.

NOTE △1 If a remainder exists, an additional sector (immediately preceeding index) is created. The remainder is equal to number of dibits in additional sector.

9H11

Figure 1-15. Sector Switch Calculation

SECTION 2

MAINTENANCE

INTRODUCTION

This section provides all the information necessary to maintain all models and all configurations of the drive. The maintenance discussed in this section is limited to that which can be performed in the field. Unless otherwise specified the information presented here applies to all equipments listed in the front of this manual.

The maintenance procedures defined in this section are to be performed only by qualified maintenance personnel. Maintenance is performed in accordance with the time schedules provided at the beginning of each subsection, or as needed in the case of corrective maintenance.

Information in this section is divided into the following major areas:

- General Maintenance Information - Provides information on safety precautions, maintenance tools and materials, controls an test points, standard test conditions, and accessing the drive for maintenance, be thoroughly familiar with the information in this section.

- Preventive Maintenance - Provides procedures for performing a regularly scheduled maintenance routine.

- Tests and Adjustments - Provides procedures for all the major drive level tests and adjustments which can be performed in the field.

- Repair and Replacement - Provides procedures and information on the replacement and adjustment of drive assemblies. This section assumes that the assembly was previously identified as malfunctioning.

SECTION 2A

GENERAL MAINTENANCE INFORMATION

GENERAL

This section contains general information relating to maintenance of the drive. A person performing maintenance on the drive should be familiar with this information in addition to the operating principles and procedures described in the hardware reference manual.

The information in this section is divided into the following areas:

- Safety Precautions - Lists safety precautions that must be observed when working on the drive.
- Maintenance Tools and Materials - Lists the tools and materials required to perfrom maintenance on the dirve. This includes discusiions on the type and handling of disk packs, the field test unit, the head alignment kit, and the use of system software, all of which are used for performing drive tests and adjustments.
- Standard Test Conditions - Describes and defines the basic conditions from which al the test procedures start. This includes defining the power on/off condition, online/offline condition, disconnecting the I/O, and manually positioning the carriage.
- Accessing Drive for Maintenance - Identifies the various parts of the drive electronics assemlby and provides the procedures which describe opening and closing the various parts of the machine in order to gain access for maintenance purposes.

SAFETY PRECAUTIONS

Observe the following safety precautions at all times. Failure to do so may cause damage and/or personal injury.

- Use care while working with power supply. Line voltages are present inside the base (A1) in the area of the ac power supply.

- Keep hands away from actuator during seek operations and when reconnecting leads to voice coil. Under certain conditions, emergency retract voltage may be present, causing sudden reverse motion and head unloading.

- Use caution while working near heads. If heads are touched, fingerprints can damage them. Clean heads immediately if they are touched.

- Keep pack access cover closed unless it must be open for maintenance. This prevents entrance of dust into pack area. Do not open pack access cover while disk is spinning or attempt to slow disks by hand.

- Keep all watches, disk packs, meters, and other test equipment at least two feet away from voice coil magnet.

- Do not remove or install circuit cards while power is on. Circuit cards are easily damaged by transient voltage spikes which may be generated by removing or installing cards when power is on.

- Ensure that logic chassis is in normal operating position before raising deck. On rail mounted configurations, the logic chassis will be damaged by collision with the cabinet or frame. Also, since logic chassis cannot be secured in maintenance position, it may fall and be damaged as deck is raised.

- If maintenance procedures require opening the acoustic top cover, be sure that the cover's support red is securely in place. An improperly secured red can cause the cover to fall and may result in personal injury.

- Do not open acoustic top case when drawer mounted drive has logic chassis in maintenance position. The top case and drawer unit's logic chassis will collide and damage will occur.

- Do not use customer disk pack for testing purposes, (see paragraph on disk packs).

- Do not use CE alignment disk pack unless specifically directed to do so. These packs contain prerecorded alignment data that can be destroyed if test procedure requires drive to write. This aligment data cannot be generated in the field.

- If drive fails to power down when START switch is pressed (to turn off indicator) disconnect voice coil leadwire (see paragraph on manual carriage positioning and manually retract heads before troubleshooting malfunction.

- Make certain that heads are retracted before turning off power.

- If power to drive motor is lost while heads are loaded and not under servo control (during manual carriage positioning), immediately retract carriage. Otherwise heads will crash when disk speed is insufficient to enable heads to fly.

- Keep all metal tools away from flex leads while power is applied in order to prevent damage to the power amplifier.

MAINTENANCE TOOLS AND MATERIALS

GENERAL

The maintenance procedures described in this manual require the use of certain special tools, test equipment, and materials. These tools, and test equipment are listed in table 2-1 along with the appropriate source part number. Note that the list only includes special tools. It is assumed that the user has at his disposal all the common hand tools such as wrenches, screw drivers, and the like.

Most of the items listed in the table require no explanation. The items listed in the table are called out in the specific procedures in which they are required. However, some of the items included in the list require further explanation.

Throughout this manual the procedures assume that the reader has a disk pack and some means of excercising the drive at his disposal. The procedures are written assuming the field test unit is available. However, if there is suitable system software available it may be used in place of the field test unit. Likewise, the head alignment kit is available either by itself or as a part of the field test unit. The following paragraphs discuss the disk packs, field test unit, head alignment kit, and system software.

DISK PACKS

The maintenance procedures refer to three types of disk packs: (1) customer (2) scratch and (3) CE. All three are physically identical, but are used for different purposes.

A customer disk pack refers to a pack used by the customer for data storage during normal online operations.

The CE pack contains special prerecorded information used during maintenance. Use care to ensure that this data is not destroyed or altered.

A scratch pack is simply a disk pack that does not contain customer or other information that must not be destroyed. Therefore, a scratch pack can be used in maintenance procedures where a danger exists that the pack could be damaged or its information altered.

Disk Pack Installation-Removal

Refer to the operation section of the hardware reference manual for information on disk pack installation and removal.

Disk Pack Handling

The positive pressure filtration system of the drive eliminates the need for periodic inspection and cleaning of the disk pack (media). However, should improper operating conditions of the pack be indicated by any of the following symptoms, immediately remove the pack from the drive.

1. A sudden increase in error rates related to one or more heads is observed.

2. An unusual noise such as pinging or scratching is heard.

3. A burning odor is smelled.

4. Contamination of the pak from dust, smoke, oil or the like is suspected.

If any doubt about the pack's functional condition exists, return it to the vendor, enclosing a description of the known or suspected malfunction.

CAUTION

Do not attempt to operate the media on another drive until full assurance is made that no damage or contamination has occurred to the media.

Do not attempt to operate the drive with another media until full assurance is made that no damage or contamination has occurred to the drive heads or to the shroud area..

Disk Pack Inspection and Cleaning

In some cases, the user may attempt to inspect and clean the disk pack rather than return it to the vendor. This task must be performed by properly trained personnel only, using the following procedure.

NOTE

Inspection and cleaning of disk packs in the field can cause additional problems for the following reasons:

- Exposure of the pack to non-cleanroom conditions during inspection and cleaning may additionally contaminate the pack.
- Disk surfaces may be scratched by using contaminated or improper cleaning equipment.
- The pack may be damaged while the covers are removed.
- Deposits of cleaning solution residue may be left on disk surface if improperly cleaned or if commercial grade solutions are used.

CAUTION

Disk pack cleaning should never be attempted with the pack mounted on the drive, since this setup can introduce contamination into the drive itself.

1. Mount the pack on a commercially available pack inspection fixture.
2. Dampen, but do not soak, a lint-free swab-paddle with media cleaning solution (refer to the list of Maintenance Tools and Materials), or with a solution of 91% reagent grade isopropyl alcohol and 9% deionized water by volume.

TABLE 2-1. MAINTENANCE TOOLS AND MATERIALS	
Description	CDC Part Number
Adapter (3/16 Hex to 1/4 Sq)	CDC* 12262582
Adhesive (Drive Seals)	CDC 64303300
Bonding Agent, Fast Set	CDC 95033900
Card Extender	CDC 54109701
Card Extraction Tool	CDC 87399200
Carriage Alignment Arm	CDC 75018400
Chip Extender (Chipclip)	CDC 12212196
Cloth, Lint Free	CDC 94211400
Computer Card**	5084 or equiv.
Deck Support Bracket (S/C 16 & BLW)	CDC 87073000
Disk Pack, CE (40 MB)	CDC 70439001 (876-51)
Disk Pack, CE (80 MB)	CDC 70438700 (877-51)
Disk Pack, Data (40 MB)	CDC 70439500 (876)
Disk Pack, Data (80 MB)	CDC 70438000 (877)
Dust Remover, Spray Dry**	CDC 95047800

Table Continued on Next Page

TABLE 2-1. MAINTENANCE TOOLS AND MATERIALS (Contd)	
Description	CDC Part Number
Field Test Unit (TB304A) (with Head Alignment)	CDC 77449300
Field Test Unit (TB304B) (with Head Alignment)	CDC 77449301
Field Test Unit (TB304C) (without Head Alignment)	CDC 77449302
Filter Coat	CDC 12210958
Gauze, Lint Free	CDC 12209713
Grease, Dielectric	CDC 95533600
Head Adjustment Tool	CDC 75018803
Head Alignment Kit	CDC 77440503
High Intensity Light****	CDC 12212038
Hose Assembly	CDC 82346500
I/O Pin Removal Tool	CDC 12212759
Loctite, Grade C	Loctite Corp.
Loctite Primer, Grade T	Loctite Corp.
Lubricant Paste	CDC 95016101

Table Continued on Next Page

TABLE 2-1. MAINTENANCE TOOLS AND MATERIALS (Contd)

Description	CDC Part Number
Media Cleaning Solution	CDC 82365800
Mirror	Commercially Available
Non-Metallic Feeler Gauge, 0.005 inch	CDC 12205633
Oscilloscope, Dual Trace	Tektronix 454A or equivalent
Oscilloscope Hood	Tektronix 016-0083-00
Pin Straightener	CDC 87369400
Pressure Gauge Kit, Differential (optional)	CDC 73040100
Push-Pull Gauge	CDC 12210797
RTV Adhesive Sealant	CDC 95045700
Rubber Silicone Sealant	CDC 95023500
Wirewrap Removal tool, 20-30 Gage	CDC 12259183
Scope Probe Tip (Hatchet Type)	CDC 12212885
Speed Sensor Adjustment Tool	CDC 87052600
Sprayable Adhesive	CDC 95018602

Table Continued on Next Page

TABLE 2-1. MAINTENANCE TOOLS AND MATERIALS (Contd)	
Description	CDC Part Number
Torque Screwdriver**	CDC 12218425
Torque Screwdriver Bit**	CDC 87016701
Torque Wrench, 1/4 inch	CDC 12263205
Volt/ohmeter	Ballantine 345 or equivalent digital voltmeter
Wire Wrap Bit, 30 Gauge	CDC 12218402
Wire Wrap Gun, Electric	CDC 12259111
Wire Wrap Sleeve, 30 Gauge	CDC 12218403

*CDC is a registered trademark of Control Data Corporation.
**Used for head cleaning.
***Torque screwdriver and bit are used for torqueing head clamping hardware.
****Works only with 120 V, 60 Hz. For other voltages and frequencies, use commercially available 100 or 150 watt outdoor floodlight with suitable receptacle and extension cord. Note: Light must have hard safety glass bulb and all items must be rated for use with applicable source power.

3. Using a sweeping motion, insert the damp swab-paddle between the disks and manually rotate the pack while applying the swab-paddle lightly to the disk surface to be cleaned.

4. After the swab-paddle has been applied for one full cleaning rotation, withdraw it with a sweeping motion while maintaining contact with the disk surface (do not lift the swab-paddle from the surface).

5. If oxide or contaminants are observed on the swab-paddle, repeat steps 2, 3, and 4, using a clean swab-paddle for each pass, until no oxide or contaminants are observed on the swab-paddle.

6. Repeat steps 3 and 4 using a dry swab-paddle to remove all cleaning solution residue.

7. Repeat steps 2 through 6 for each surface.

FIELD TEST UNIT

The Field Test Unit (FTU) is basically and offline tester. This means that the drive cannot be selected or used by the controller while the FTU is is use. The one exception to this is that the FTU can be used to monitor head off-set while a test software routine is performing the head alignment check.

The FTU is connected to the drive in one of two ways: (1) through the standard I/O conectors on the I/O card(s) (On dual channel units the FTU may be connected to either channel I or channel II, depending on which I/O is to be checked.) or (2) through the I/O bypass connection.

The standard I/O connection requires that the system I/O cables be disconnected and that th FTU I/O cables be connected in their place. This also reequires tat te FTU flat cable adapter cables be used. When the FTU is connected to a drive through te standard I/O connections, the drive (on channel) to which the FTU is connected, must have an I/O terminator card installed. When the FTU is connected through the I/O the drive must be set to Online operation. However, the Local/Remote switch A10S1 may be set to either position depending on whether or not the drive is to be powered on from the FTU.

The I/O bypass connection leaves the system I/O cables in place and connects and I/O bypass cable between the FTU and connector A2J2 on the logic chassis backpanel. When the FTU is connected through the I/O bypass connection, the drive must be set to Offset operation.

Specific instructions for interconnecting the drive and the FTU are contained in the preliminary set-up instructions in the FTU manual. Likewise, te procedures for causing the drive to perform various operations (access, read, write, head selection) required for testing are contained in the FTU manuyal. When performing the preliminary set-up procedure the drive oriented switches located on teh FTU panel shall be set as follows:

- RPM to 3600 (HI)
- TPI to 200 (LO) for BK4XX and to 400 (HI) for BK5XX
- HEADS to 5 (LO)
- BPI to 6000

The FTU also contains the head alignment card. The head alignment card, used in conjunction with the meter on the FTU, performs the same function as the head alignemnt kit. Refer to the following paragraph for details on the head alignment kit.

HEAD ALIGNMENT KIT

The head alignment kit contains the head alignment card, the head alignment cable, and the associated null meter (refer to figure 2-1). The head alignment card develops an output voltage which is dereived from the output of the servo and read/write preamplifiers. When a CE disk pack is installed in the drive, this output voltage will be proportional to the distance a selected head is offset from the track centerline. the head alignment card plugs into card location A02 in the logic chassis.

The head alignment card included in the kit is either the _FSV card or the AZPV card. The only difference between the cards is that the AZPV card does not have the four indicators found on the _FSV card (see figure 2-1).

The following toggle switches, located on the card edge, control the cards operation:

S1 - Changes the polarity of the alignment signal and is used in aligning both servo and read/write heads. Refer to paragraph on calculating offset in Head Alignment procedure. (See Tests and Adjustments Section.)

S2 - When switch is in S position, the card selects the servo head as an input to the card. Wehn switch is in R/W position it selects a data head input to the card.

S3 - Changes sensitivity of card. When in X.1 position, the cards sensitivity is reduced by a factor of 10. When in X1 position, the cards sensitivity is not reduced. This switch must be in X1 position when making meaasurements for use in calculating head alignment error.

Four indicators are provided on the _FSV card (but not on the AZPV card) as monitors to ensure the card is operating properly and is receiving the proper data. These indicators are as follows:

Power - When lighted it indicates power is applied to card.

Input - When lighted, it indicates the input signals are too low for the alignment card circuits to operate.

Bad Track - When lighted, it indicates a short duration loss of input. A one shot maintains the lighted condition for at least four seconds. Note that this indicator lights when the position of switch S1 is changed.

Mode - When lighted it indicates that either S2 is in the S (servo) position or S3 is in the X.1 position. When either of these conditions exists, read/write head alignment error cannot be measured.

The card receives its inputs through the connector in logic chassis card position A02. The Servo Dibits signal is wirewrapped to this connector. The ground and Head Alignment Output signals are provided through the head alignment cable which is part of the head alignment kit. This cable connects between card slot A2 (pins 08 through 11) on the wirewrap side of the logic chassis, and connector J104 located on the head select/read amplifier card A3A02.

The output voltage of the card is measured by a null meter which connects through test leads to test points X and Z on the card. THis meter is either part of te head alignment kit or is located on the FTU panel.

The switch on the meter's front panel changes the sensitivity of the meter. When in the 50 position, the meter read 50mV full scale. When the switch is in the 500 position, the meter reads 500mV full scale. The switch must be in thh 50 position when making measurements for use in calculating head alignment errors.

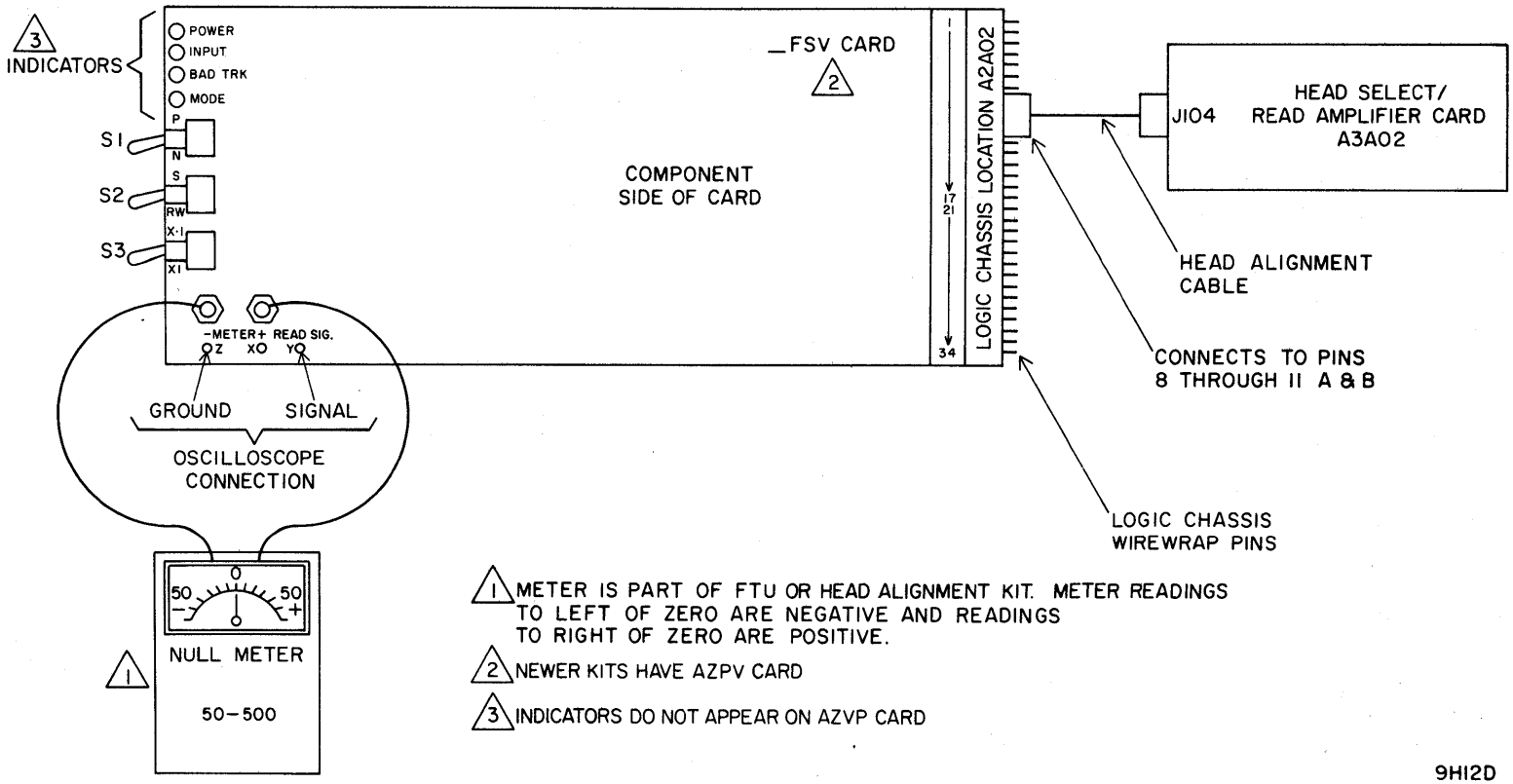

Figure 2-1. Head Alignment Kit

SYSTEM SOFTWARE

The drive may also be tested by use of microdiagnostic test routines (system software). This requires use of the controller and the appropriate software. In this type of testing the drive communicates with the controller as during normal online operations an no special I/O connections are necessary.

When system software is used to test the drive; it must be set to online operation, have power applied, have the correct disk pack installed, and have the appropriate logical address plug installed.

Refer to manuals or other documentation applicable to the specific system or subsystem for information concerning the system software routines.

MAINTENANCE CONTROLS AND TEST POINTS

GENERAL

Throughout this manual references are made to switches, indicators, and test points. The material contained in the following two paragraphs identify and define these controls. Since much of the information is based on the physical location code of the control or test point, refer to the General paragraph under Accessing Drive For Maintenance for a discussion of the codes.

MAINTENANCE CONTROLS

In addition to the operator panel and power panel switches and indicators described in the Operation section of the Hrdware Reference Manual, the drive has a number of controls used primarily for maintenance. All these controls are located on the edges of cards in the logic chassis. Figure 2-2 illustrates these controls and indicates the switch positions. Table 2-2 describes the function of each control. For single channel drives disregard all references to logic card B05.

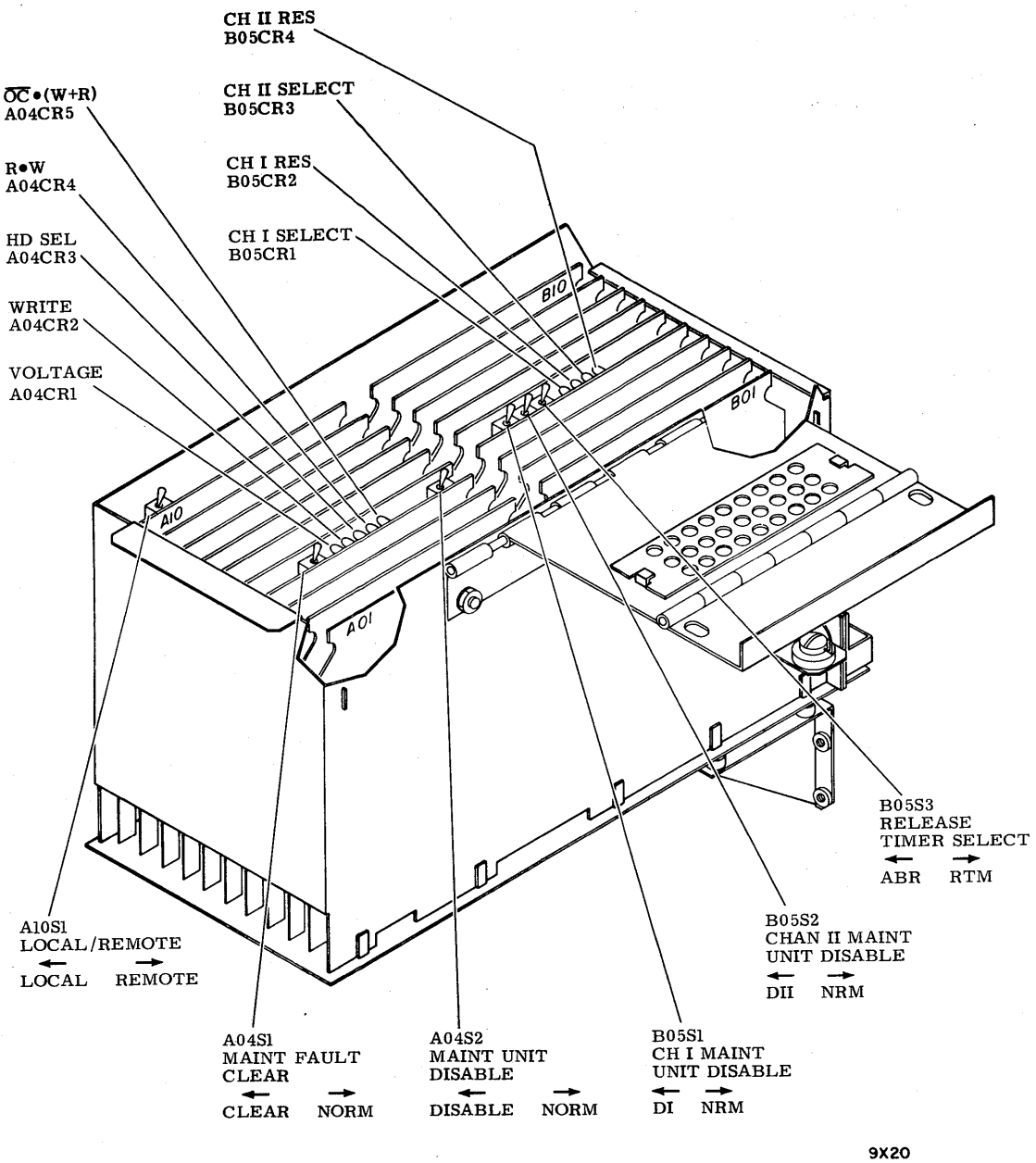

NOTE: DUAL CHANNEL CARD COMPLEMENT SHOWN.

Figure 2-2. Maintenance Switches and Indicators

TABLE 2-2. MAINTENANCE SWITCHES AND INDICATORS

Physical Location Code	Name	Description
A04CR1	Voltage	Lights to indicate a below normal voltage existed.
A04CR2	Write	Lights to indicate a write fault existed.
A04CR3	HD SEL	Lights to indicate a multiple head select occurred.
A04CR4	R W	Lights to indicate that both write and read were selected simultaneously.
A04CR5	OC (W + R)	Lights to indicate that a write or read was selected during a seek operation (not on cylinder).
A04S1	Maint Fault Clear	CLEAR position clears out Fault latch and five Fault Status latches. When switch is actuated fault indicators on edge of Fault card go out and remain out unless condition causing fault still exists. NORM is normal operating position for switch and position to which it returns when released (spring loaded).
A04S2	Maint Unit Disable	Although switch exits on both single and dual channel drives, or is only used on single channel units. Dual channel units use switches B05S1 and S2 for same purpose. DISABLE position prevents Unit Selected from being sent to controller and disables transmitters and receivers.

Table Continued on Next Page

TABLE 2-2. MAINTENANCE SWITCHES AND INDICATORS (Contd)

Physical Location Code	Name	Description
A04S2	Maint Unit Disable	NORM is normal operating position and position switch must always be in for all dual channel drives.
A10S1	Local/Remote	LOCAL position prevents control of power sequencing by controller. Drive is powered on and off by START switch assuming circuit breakers are set to On. REMOTE position allows controller to command power sequencing. Drive cannot be started until a grouind is applied via subsystem Power Sequence Pick and Hold lines.
B05CR1	CH I Select	Lights to indicate Channel I has selected drive.
B05CR2	CH I Res	Lights to indicate Channel I has drive reserved.
B05CR3	CH II Select	Lights to indicate Channel II has selected drive.
B05CR4	CH II res	Lights to indicate Channel II has drive reserved.
BO5S1/S2	Channel I/II Maint Unit Disable	Switches apply only to dual channel units. They perform same function as switch A04S2. In DI position switch S1 disables Unit Selected signal, transmitters, and receivers to channel I controller. Switch S2 disables Unit Selected signal, transmitters, and receivers to channel II controller when set fo DII position.

Table Continued on Next Page

TABLE 2-2. MAINTENANCE SWITCHES AND INDICATORS (Contd)

Physical Location Code	Name	Description
		NORM is normal operating position for switches. When performing maintenance on drive both switches should be set to their disable position.
B05S3	Relase Timer Select	Switch applies only to dual channel drives. Used to select between an absolute reserve and reserve time condition to control selection of drive by controller. In ABR (absolute reserve) position, controller selecting drive has control until it issues a release command. During this time opposite channel controller is unable to select drive except by using disable command (see reference manual). In RTM (Reserve Timer) position, first controller to select drive, holds it reserved for nominally 500 ms following time Unit Select Tag is dropped. During this time, opposite channel controller cannot select drive except by using disable command (see reference manual).

TEST POINTS

Throughout the drive there are a number of test points which are used in the various stages of maintenance. Table 2-3 lists these test points. The table is arranged in alpha-numeric order bvy physical location codes of the cards. Refer to the General paragraph under Accessing Drive For Maintenence for a description of the physical location codes.

Table 2-3 also lists the card type(s) that may be in any given physical location. If the test point information is true for a number of card types, then all the types are listed. If the information changes between different card types in a given physical location, then there are individual listings for each card type.

Test points "A" and "Z" on all cards are always ground and are therefore not listed in the table. The test points are listed alphabetically for each card type. The alphabetical identification for the test point also appears next to the test point on the card. The table identifies those test points which are on the card edge and can be reached while the card is in the logic chassis. The remainder of the test points can only be accessed with the card on a card extender.

The last column in the table provides the cross reference number for the logic page in the logic diagrams that show the test point

STANDARD TEST CONDITIONS

GENERAL

Unless otherwise specified all drive tests start with power removed from the drive and the drive set to offline oeration. Some tests require that the FTU be installed which may require that the I/O cable be disconnected. Also some special test requires that the carriage be manually positioned. The following paragraphs define these standard test conditions. All procedures throughout this manual assume the reader is familiar with these conditions.

POWER ON/POWER OFF

The drive may be either online or offline when it is powered on or off. In order to apply power the following interlocks must be closed:

- Deck Interlock Switch - Deck in normal operating position
- Pack Cover Switch - Pack access cover closed.

In addition to the interlocks, the LOCAL/REMOTE switch A10S1 and the Power Sequence pick and Hold lines must also be considered in the power on sequence. During normal maintenance the LOCAL/REMOTE switch is set to LOCAL, and therefore when all

TABLE 2-3. TEST POINTS

Physical Location Code/Card Type	Test Point	Title	Cross Ref	Comments
A2A01/CLSV	T	+ 9.67 MHz Clock	012	
	U	- Dibit Strobe Pulse	012	
	V	- Dibit OSC Window	012	
	W	+ Write Clock Strobe	013	
	X	+ Write Clock Window	013	
	Y	+ 19.34 MHz Clock	013	
A2A03/HFRV GFRV	E	+ Sensing Dibits	032	
	F	+ CYL Detect A	034	
	G	+ CYL Detect B	034	
	H	+ Track Servo Signal	034	
	J	- Analog Servo Detect	033	
	K	- Attenuator Output	032	
	L	+ Analog Servo Detect	034	
	M	+ Attenuator Output	032	
	N	+ 14 V 031		
	P	- 14 V 031		
	Q	+ AGC 034		
	R	- Peak Detector	033	
	S	+ Peak Detector	033	
	T	+ AGCed Servo Signal	033	
	U	- AGCed Servo Signal	033	
	V	- Trigger	034	
	W	+ 50% Detector	034	
	X	- 50% Detector	034	
	Y	+ Timer	034	
A2A04/DKFV	B *	+ Up To Speed	044	
	C *	Not Used	-	
	D *	Not Used	-	
A2A05/HLRV KLRV	B *	+ Strobe Pulse	052	KLRV used
	C *	+ Missing Address (ECL)	053	only on
	D *	+ Data Window	052	BK5B6A-D;
	E *	- AM Disable	053	S/C 21 &
	F *	+ Missing Address (TTL)	053	Abv. HLRV
	G *	- Lock to Data + AM Pulse	053	used on
	H *	- Missing Address Pulse	053	all other
	J *	+ Read Gate	053	units

Table Continued on Next Page

TABLE 2-3. TEST POINTS (Contd)

Physical Location Code/Card Type	Test Point	Title	Cross Ref	Comments
	X	+ Low Frequency Filter Output		052
	Y	- Low Frequency Filter Output		052
A2A06/BLZV	W	+ VCO Input	063	
	X	+ Data Window Divide By 2	064	
	Y	+ Data Strobe	062	
A2A07/BLQV LLQV	B *	+ INTEG Velocity	072	
	C *	+ Summing AMP Output	072	
	D *	+ Desired Velocity	072	
	E *	+ Coarse Position Error	073	
	F *	+ Velocity	072	
	W	- Coarse Position Error	073	
	X	- D/A Bits 0 - 6	073	
	Y	+ Summing Amp Notch Amplifier	072	
A2A07/JLQV	B *	+ INTEG Velocity	072	
	C *	+ Coarse Position Error	073	
	D *	+ Desired Velocity	072	
	E *	+ Summing AMP Output	072	
	F *	+ Velocity	072	
	T	+ Buffered Velocity	072	
	U	- D/A Bits 0 - 5	073	
	V	+ D/A Bits 0 - 7	073	
	W	- Coarse Position Error	073	
	X	- D/A Bits 6, 7	073	
	Y	+ Summing Amp Notch Amplifier	072	

Table Continued on Next Page

TABLE 2-3. TEST POINTS (Contd)

Physical Location Code/Card Type	Test Point	Title	Cross Ref	Comments
A2A08/ELUV FLUV	B *	- EOT Integrator Clamp	082	
	C *	+ EOT Integrated Velocity	082	
	D *	Offset Analog	084	
	E *	+ Fine Position Notch Amplifier	085	ELUV only
	E *	FWD + REV Offset Analog	084	FLUV only
	F *	+ Fine Position Analog	084	
A2A09/FLPV	W	- Fine Position Analog	092	
	X	- Summing Amplifier	092	
	Y	+ Power AMP Driver	093	
A2A10/6SGV	B *	Speed Analog	103	
	C *	+ Remote Start	102	
	D *	- Speed Pulses	104	
	E *	+ Up To Speed Enable	104	
	F.*	+ Delayed Up To Speed Enable	104	
A2B01/FTVV GTVV	B *	+ CH I Unit SEL Bit 2	113	
	C *	+ CH I Unit SEL Bit 3	113	
A2B02/JRVV	B *	+ Control select	124	
	C *	- CH I Open Cable Detect	124	
	D *	+ Tie High	124	
A2B03/FTVV GTVV	B *	+ CH II Unit SEL Bit 2	133	
	C *	+ CH II Unit SEL Bit 3	133	
A2B04/JRVV	B *	+ Control Select	144	
	C *	- CH II Open Cable Detect	144	
	D *	+ Tie High	144	

Table Continued on Next Page

TABLE 2-3. TEST POINTS (Contd)

Physical Location Code/Card Type	Test Point	Title	Cross Ref	Comments
A2B05/EKHV	B *	+ Reserve Timer	153	
	C *	+ Selected Clock	152	
	D *	+ CH II Select Compare	154	
A2B06/FLWV	B *	- Carry Interrupt	163	
A2B07/DLXV	B *	+ Strobe Data	172	
ELXV	C *	- Uncompensated MFM Data	173	
	D *	+ Write Gate	172	
	E *	+ Data Buffer	172	
A2B08/FLTV	B *	+ Reverse EOT Pulse	183	
	C *	+ Index	182	
A2B09/MLVV	B *	- Seek Pulse	193	
NLVV	C *	- Start Seek	193	
	D *	- Power Up Delay	194	
A2B10/6SMV	B *	- Disable CH II	202	
	C *	- Disable CH I	202	
	D *	DIFF Output	202	
	E *	DIFF Output	202	
	F *	- Seek Interrupt	202	
A3A02/NZJN	A *	Read Preamplifier	263	
PZJN	B *	Read Preamplifier	263	
	E *	+ AGC REF Voltage	263	
	F *	AGC Output	263	
	G *	AGC Output	263	
	H	- 6 Volts	261	
	HO	Head Select 0	262	
	H1	Head Select 1	262	
	H2	Head Select 2	262	
	H3	Head Select 3	262	
	H4	Head Select 4	262	

Table Continued on Next Page

TABLE 2-3. TEST POINTS (Contd)

Physical Location Code/Card Type	Test Point	Title	Cross Ref	Comments
	J	+ Read Enable	262	
	K	+ 6 Volts	261	
	L	Rectifier Output	263	
	M	+ Missing Address	263	
	N	+ Read Address Mark Enable	263	
	P	+ Address Mark Detect	263	
	Q *	+ Multiple Head Select Fault	262	
	R	- Analog Data	263	
	S	+ Analog Data	263	
A3A03/CZKN EZKN	A *	- MFM Data Pulses	272	
	B	Write Voltage Sense Reference	273	
	C	Write Data Voltage Translator Output	272	
	D	Write Data Voltage Translator Output	272	
	E *	- Write Data	272	
	F *	- AC Write Fault	273	
	G *	+ Write Protect Clamp	272	
	H *	Write Current	272	
	J	Write Current Fault Reference	272	
	K	- Writer Turn Off Fault	273	
	L *	- Write Current Fault	272	
	M *	- Turn On Fault Inhibit Delay	273	
	N *	- Turn Off Fault Inhibit Delay	273	
	P	+ Write Gate	272	
	Q	Write Current D/A Output	272	
	R *	Write Voltage Regulator Output	271	
A1A03/ASHV	- 5V	- 5 Volt (Unregulated)	332	
	+ 5V	+ 5 Volt (Unregulated)	333	

*Test point on edge of card.

other conditions are satisfied the drive starts. The following is the definition of the power on condition, power off is the reverse of these conditions:

- AC POWER circuit breaker set to ON
- POWER SUPPLY circuit breaker set to ON
- START switch pressed such that it is lighted

It should be noted that for operations such as changing packs, it is not necessary to turn off the circuit breakers. It is only necessary to stop the drive motor by pressing the START switch (indicator not lighted).

When it is necessary to turn off power for one particular drive in a daisy chain string, it is recommended that the entire string be powered off (at least by pressing the START switch). This is necessary in order to prevent error conditions.

ONLINE/OFFLINE

The drive may be set offline (with respect to the system) as necessary to accomplish maintenance procedures. If it is required that the interface cables be disconnected for any reason refer to the paragraph on Disconnecting I/O Cables. While it is not necessary to remove power from the drive in order to set it offline, it is necessary to remove power from the drive in order to set it offline, it isnecessary to remove power in order to connect an FRU or similar test equipment (refer to paragraph on Power On/Power Off). Wjenever the drive is taken offline for any reason, inform the system operator beforehand. The following two procedures (single and dual channel) describe setting the drive offline. Setting the drive online is simply the opposite condition.

Single Channel

1. Set Local/Remote switch A10S1 to LOCAL.
2. Set Maintenance Unit Disable switch A04S2 to DISABLE.

Dual Channel

1. Set Local/Remote switch A10S1 to LOCAL.
2. Set Channel I Maintenance Unit Disable switch B05S1 to DI.
3. Set Channel II Maintenance Unit Disable switch B05S2 to DII.

DISCONNECTING I/O CABLES

There are two I/O cable configurations: (1) star, (2) daisy chain. Refer to the Interconnect Cables and Terminators paragraph in Section 1 for further information. If the system uses a star cable configuration it may or may not need to have power removed prior to disconnecting the I/O cables. Refer to system manual for details. If the system uses the daisy chain cable configuration it must have power removed before the I/O cables are disconnected. The following procedure defines disconnecting I/O cables. Reconnecting the I/O is performed in the reverse order.

NOTE

Inform system operator that drive(s) are being taken offline.

1. Remove power from drive (from all drives if in a daisy chain string).

2. Referring to figure 3-21, remove I/O clamp securing I/O cables.

3. Remove A cables from ocnnectors J3 and J4. Remove B cable from connector J2.

4. If system operation is required during time drive is removed from daisy chain, patch I/O cables around drive under test.

5. Perform required maintenance on drive.

MANUAL CARRIAGE POSITIONING

Certain tests require manual positioning of the carriage and coil assembly. This procedure should only be performed as required by specific tests later in this manual, or as a trouble shooting procedure when the drive does not respond under normal logic control. It should be noted that improper carriage positioning causes servo fault conditions. Typical examples of improper carriage positioning are such things as: loading heads too slowly, hitting forward stop with carriage, or positioning carriage in loading zone. If a servo fault does occur, unload heads, clear the fault, and repeat the operation being performed.

1. Press START switch to stop drive motor and unload heads. Set POWER SUPPLY circuit breaker to OFF.

2. Disconnect yellow voice coil leadwire from faston on edge of power amplifier assembly.

3. Set POWER SUPPLY circuit breaker to ON and press START switch to start drive motor.

4. Remove magnet cover by snapping it out of place.

CAUTION

Wait 30 seconds for drive motor to come up to speed then load heads. Avoid having heads in partially loaded condition.

5. Carefully grasp voice coil and load heads. Use care not to apply a downward force. Move carriage at approximately same speed it moves under logic control

6. Position carriage as requied to accomplish test being performed.

7. When tests are completed, manually unload heads to fully retracted position.

8. Press START switch to stop drive motor and set POWER SUPPLY circuit breaker to ON and press START switch to start drive motor.

WARNING

Be certain fingers are clear of positioner before connecting voice coil leadwire.

9. Reconnect yellow leadwire to faston on power amplifier assembly.

ACCESSING DRIVE FOR MAINTENANCE

GENERAL

The material in this section deals with gaining access to the drive electronics assembly to perform routine maintenance procedures. Figure 2-3 shows all of the functional electronics in the drive and indicates the physical location codes assigned to each. Alongside some of the location codes there is another identifier in parenthesis. This indicates the mating connectors identifier.

Table 2-4 is in alpha-numeric listing of all the physical location codes. The table also provides the title for each entry, and cross references to the parts data illustration and the sheet in the logic diagram set.

The number listed in the parts column of the table is the figure number which shows the listed item. In some cases there is a third part to the number (3-30-3), this third part (-3) indicates the sheet number of a multi-sheet illustration.

The number in the diagrams column of the table is the cross reference number of the diagram sheet wich shows the listed item. In some cases an "X" appears as the third digit of the cross reference number. This indicates that the listed item is scattered over a number of sheets within the specified cross reference set (see introduction to logic diagrams for explanation of cross reference numbering system).

The procedures which follow in this section deal with opening and closing the various parts of the drive and cabinet. Many operations, such as opening and closing doors, are obvious and require no explanation. Other operations, such as sliding out the rail-mounted drive, only require the location of parts. Determine these things by looking at the appropriate illustration in the Parts data section. Should it be necessary to remove any of the components of the drive, refer to Section 2D, Repair and Replacement for the appropriate procedure.

The following procedures are included to explain details which are not obvious in themselves or by looking at the associated illustrations. Procedures contained throughout this manual assume that the reader is familiar with the information presented here.

PACK ACCESS COVER OPENING AND CLOSING

The pack access cover should only be opened to change packs or perform a maintenance procedure. Do not allow the cover to stand open more than necessary. The open cover allows dust to enter the pack area, and the dust is potentially damaging to the disk pack and heads. Never open the pack access cover while the disks are turning.

Some drives have a pack cover interlock feature installed. On these machines the pack access cover can only be opened when the ac and dc circuit breakers are set to ON and the disks are not turning. If power is applied to the machine and the READY light on the control panel is lighted or blinking, the pack access cover cannot be opened.

CASE ASSEMBLY OPENING AND CLOSING

Although there are several types of case assemblies, for the purpose of opening and closing procedures, there are three types.

1. acoustic top case
2. pedestal case
3. normal case

The acoustic top case can have one of two methods of latching:

a. two 1/4-turn fasteners
b. a slide-bolt latch

The pedestal case is latched with two top cover release catches. These catches may or may not be secured with socket head screws.

The normal case uses one method of latching (a pivot-type release latch), but there are two different configurations for using these latches:

a. using the same kind of pivot release latch at each rear corner of the case
b. using a different kind of pivot release latch at each rear corner of the case

Acoustic Top Case Opening

WARNING

The support rod will only hold the weight of the top cover if it is locked in the stop groove. An improperly secured rod will allow the top cover to fall and result in personal injury.

1. Open rear door and look inside drive to determine how case is secured.

2. Release top case as follows:

   a. If case is secured by 1/4-turn fasteners, use a screwdriver to release the two 1/4-turn fasteners. Then lift up on rear of case.
   b. If case is secured by a slide-bolt latch, use a 6 mm hex wrench to actuate the latch while lifting upward on rear of case.

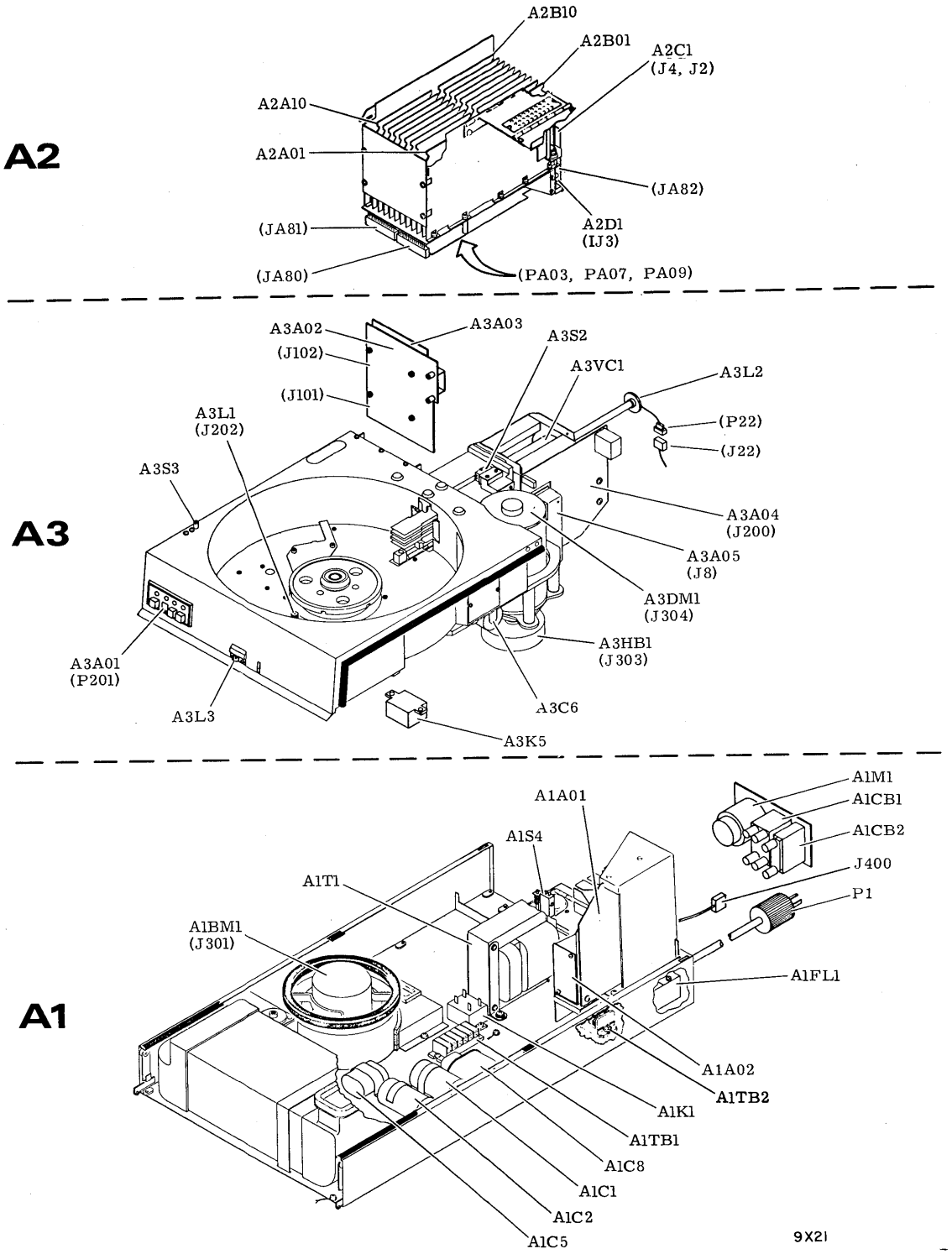

Figure 2-3. Physical Location Codes

TABLE 2-4. PHYSICAL LOCATION CODES

Physical Location Code	Title	Parts	Diagrams
A1	Base Assembly (AC Power System)	3-32 3-33	302
A1A01 *	Plus and Minus 42V Supply and Emergency Retract	3-35	31X
A1A02 *	Plus and Minus 20V, Plus and Minus 12V Supplies	3-36	32X
A1A03 *	Plus and Minus 5V Supply	3-37	33X
A1BM1	Blower Motor	3-32-2 3-33-2	302
A1C1	Servo Capacitor (+)	3-32-2 3-33-2	312
A1C2	Servo Capacitor (-)	3-32-2 3-33-2	312
A1C5	Blower Motor Start Capacitor	3-32-2 3-33-2	302
A1C8	Transformer Tuning Capacitor	3-32-2 3-33-2	302
A1CB1	AC Power Circuit Breaker	3-32-3 3-33-3	302
A1CB2	Power Supply Circuit Breaker	3-32-3 3-33-3	302
A1FL1	Line Filter	3-32-3 3-33-3	302
A1K1	Run Triac	3-32-1 3-33-1	302
A1K2	Emergency Retract Relay	3-34	312

Table Continued on Next Page

TABLE 2-4. PHYSICAL LOCATION CODES (Contd)

Physical Location Code	Title	Parts	Diagrams
A1M1	Elapsed Time Meter	3-32-3 3-33-3	302
A1S4	Deck Interlock Switch	3-32-1 3-33-1	302
A1T1	AC Power Transformer	3-32-1 3-33-1	302
A1TB1	Terminal Board	3-32-1 3-33-1	302
A1TB2	Terminal Block (50 Hz S/C 31 & Abv) (60 Hz s/C 34 & Abv)	3-32-3 3-33-3	302
A1J1A **	Power Supply Connector	3-34	31X
A1J1B **	Power Supply Connector	3-34	32X
A1J100 **	Power Supply Connector	3-34	33X
A1J400	Fan Connector (Acoustic Top Mount Only)	3-18 3-19	302
A1P1	AC Power Connector	3-32-3 3-33-3	302
A2XXX	Logic Chassis - Logic chassis and associated cards are shown on figure 3-21, sheet 1. Part number information for each card is presented in Spare Parts List in section 3. Logic diagrams for each card are found in Hardware Maintenance, Volume II, see preface for publication number.		

Table Continued on Next Page

TABLE 2-4. PHYSICAL LOCATION CODES (Contd)

Physical Location Code	Title	Parts	Diagrams
A3	Deck Assembly	3-25	- -
A3A01	Control Panel	3-23	25XX
A3A02	Head Select and Read Amplifier	3-25-5	26X
A3A03	Writer	3-25-5	27X
A3A04	Power amplifier	3-25-1	28X
A3A05	Track Servo Preamplifier	3-25-1	29X
A3C6	Drive Motor Capacitor	3-25-6	302
A3DM1	Drive Motor	3-25-6	302
A3HB1	Hysteresis Brake	3-25-6	302
A3K5	Start Triac	3-25-6	302
A3L1	Speed Transducer	3-25-4	103
A3L2	Velocity Transducer	3-29	072
A3L3	Pack Cover Solenoid (optional)	3-25-2	102
A3S2	Heads Loaded Switch	3-27	302
A3S3	Pack Cover Switch	3-25-1	252
A3VC1	Voice Coil	3-28	312

NOTES

* 3 Card Power Supply uses all three physical location codes separately;
2 Card Power Supply combines all three into one location code A1A01

** 3 Card Power Supply connectors are separate from cards.
2 Card Power Supply connectors are located on card.

3. Continue to lift case upward until support rod reaches its end of travel.

4. Then lower case until support rod bottoms securely in stop groove of support rod slide.

Acoustic Top Case Closing

1. Push case assembly forward until it reaches its end of travel.

2. Lift up on support rod.

3. Lower case while continuing to lift up on support rod just long enough for it to clear stop groove in guide; then continue to lower case to its closed position.

4. Secure case as required by:

   a. using a screwdriver to turn the two 1/4-turn fasteners to their locked positions, or
   b. confirming that the slide-bolt is fully extended below the latch catch.

Pedestal Case Opening

1. Look at the rear of case assembly to determine how case is secured. If the latches are secured by socket head screws, loosen them.

CAUTION

Lift up case only about one inch during next step.

2. Release case as follows:

   a. Depress the release catches and lift up case slightly, or
   b. Depress the socket head screws and lift up case slightly.

3. After case has been released and raised about an inch, swing hinged rear panel of case outward to clear the rear of the actuator assembly.

4. Pivot case upward and toward the front until it rests on case support arms.

Pedestal Case Closing

CAUTION

To avoid damage to latches and actuator assembly, carefully follow instructions pertaining to the case rear panel as the case is lowered.

1. Pivot case toward rear and downward, and, as it is being lowered, swing hinged rear panel of case outwards so it clears actuator. Do not completely close case.

2. When case is aobut one inch from touching frame, swing hinged rear panel inward until it reaches its end of travel.

3. While holding in hinged rear panel, lower case assembly to its fully closed position.

4. Ensure that the latches catch. If socket head screws are used, tighten them.

Normal Case Opening

1. Pull out drawer-mounted drive to its fully extended position.

CAUTION

Lift up case only aobut one inch-during the next step.

2. Release case as follows:

   a. If case has similar latch tabs protruding through the rear corners of the case, push down on both tabs while lifting up on rear of case.

   b. If case has a different kind of latch in each corner:
      (1) Push down on latch tab protruding through a slot in the left side (rear) of the case.
      (2) Insert a 6 mm hex wrench into the socket inset in the right side (rear) of the case and turn wrench to release the latch.

3. After case has been released and raised about an inch, swing hinged rear panel of case outward to clear the rear of the actuator assembly.

4. Pivot case upward and toward the front until it rests on case wupport arms.

Normal Case Closing

CAUTION

To avoid damage to latches and actuator assembly, carefully follow instructions pertaining to the position of the case rear panel as the case is lowered.

1. Pivot case toward rear and downward, and, as it is being lowered, swing hinged rear panel outward so it clears actuator. Do not completely close case.

2. When case is about one inch from touching frame, swing hinged rear panel inward until it reaches its end of travel.

3. While holding in hinged panel, lower case assembly to its fully closed position.

4. Ensure that latches catch.

RAISING AND LOWERING DECK

There are two positions the deck can be in: (1) normal operating (2) maintenance. In the normal oerating position the deck is secured to the shock mounts on the base by two holddown screws inside the shroud and next to the spindle. While in this position, the rear deck holddown screw (center of three screws at rear of deck casting) and associated spacer are stored in the keeper hole at the rear of the deck casting. The following procedure assumes that power is removed from the drive and that the disk pack is removed from the spindle. This procedure describes raising the deck to the maintenance position.

Raise the deck as follows:

1. Remove (and set aside for future use) deck holddown screws from inside shroud (refer to figure 2-4).

2. Remove rear deck holddown screw and spacer from keeper hole on back of deck casting.

3. Insert spacer between deck and base hinge (refer to inset on figure 2-4). Insert rear deck holddown screw through deck and spacer and secure to base hinge.

4. Perform step 4a for units in S/C 16 and below, perform step 4b for units in S/C 17-19, perform step 4c for units S/C 20 and above. (Optional FCO 55172 can be installed to bring units built before S/C 20 up to the latest configuration.)

   a. Lift up deck from front of drive and install deck support bracket. Bracket is inserted into shock mounts on base and into holddown screw holes in bottom of deck casting.

   b. Lift up deck from front of drive until deck support bracket is completely extended. Carefully lower deck until support bracket slides into locking position (hinge in center of bracket should point slightly towards rear of drive).

   c. Lift deck from front of drive until deck support bracket is completely extended. Carefully lower deck until support bracket slides into locking position (hinge in center of bracket should point slightly towards rear of drive). Remove thumb screw from storage hole and secure in the locking hole located on the face of the deck supprt bracket. The thumb screw must be in the locking hole when deck is in raised position.

Lower the deck as follows:

1. Perform step 1a for units in S/C 16 and below, perform step 1b for units in S/C 17 through 19 and perform step 1c for units in S/C 20 and above.

   a. Lift deck and remove deck support bracket.

   b. Lift deck until the deck support bracket disengages from locked position and push back of bracket slightly forward, then lower deck slowly.

   c. Remove thumb screw from locking hole and secure in storage hole. Lift deck until the deck support bracket disengages from locked position and push back of bracket slightly forward, then lower deck slowly.

2. Lower deck to normal operating position.

3. Secure deck to front shock mounts using two deck front holddown screws.

4. Remove rear deck holddown screw and spacer. Store in keeper hole.

RAISING AND LOWERING LOGIC CHASSIS - S/C 16 & BELOW

There are two positions for the logic chassis; (1) normal operating (2) maintenance. In the normal operating position the logic chassis sits alongside the actuator and the 1/4-turn fastener at the rear is secured to the deck casting. The following procedure describes raising the logic chassis to the maintenance position. It also describes removal of the logic chassis protective panel. Returning the logic chassis to the normal operating position is performed in the reverse order. This procedure assumes that power is removed from the drive.

1. Release 1/4-turn fastener securing logic chassis to rear of deck casting. Ensure that ring on 1/4-turn fastener does not interfere with logic chassis bracket when chassis is raised.

2. Slide logic chassis toward rear of drive to disengage chassis ears from logic chassis support rod.

3. Lift up on chassis until flat spring pops into place.

4. Pivot chassis 90 degrees and slide it over top of magnet assembly.

5. Remove attaching hardware securing logic chassis protective panel.

CAUTION

Use care not to damage cables or connectors when removing logic chassis cover.

6. Carefully slide logic chassis protective panel toward front of drive enough to disengage rear of panel from slot. Carefully slide panel along cables far enough to access back panel.

RAISING & LOWERING LOGIC CHASSIS - S/C 17 & ABOVE

There are two positions for the logic chassis: (1) normal operation (2) maintenance. In the normal operating position the logic chassis sits alongside the actuator and the 1/4-turn fastener at the rear is secured to the deck casting. The following procedure describes raising the logic chassis to the maintenance position. Returning the logic chassis to the normal operating position is performed in the reverse order. This procedure assumes that power is removed from the drive.

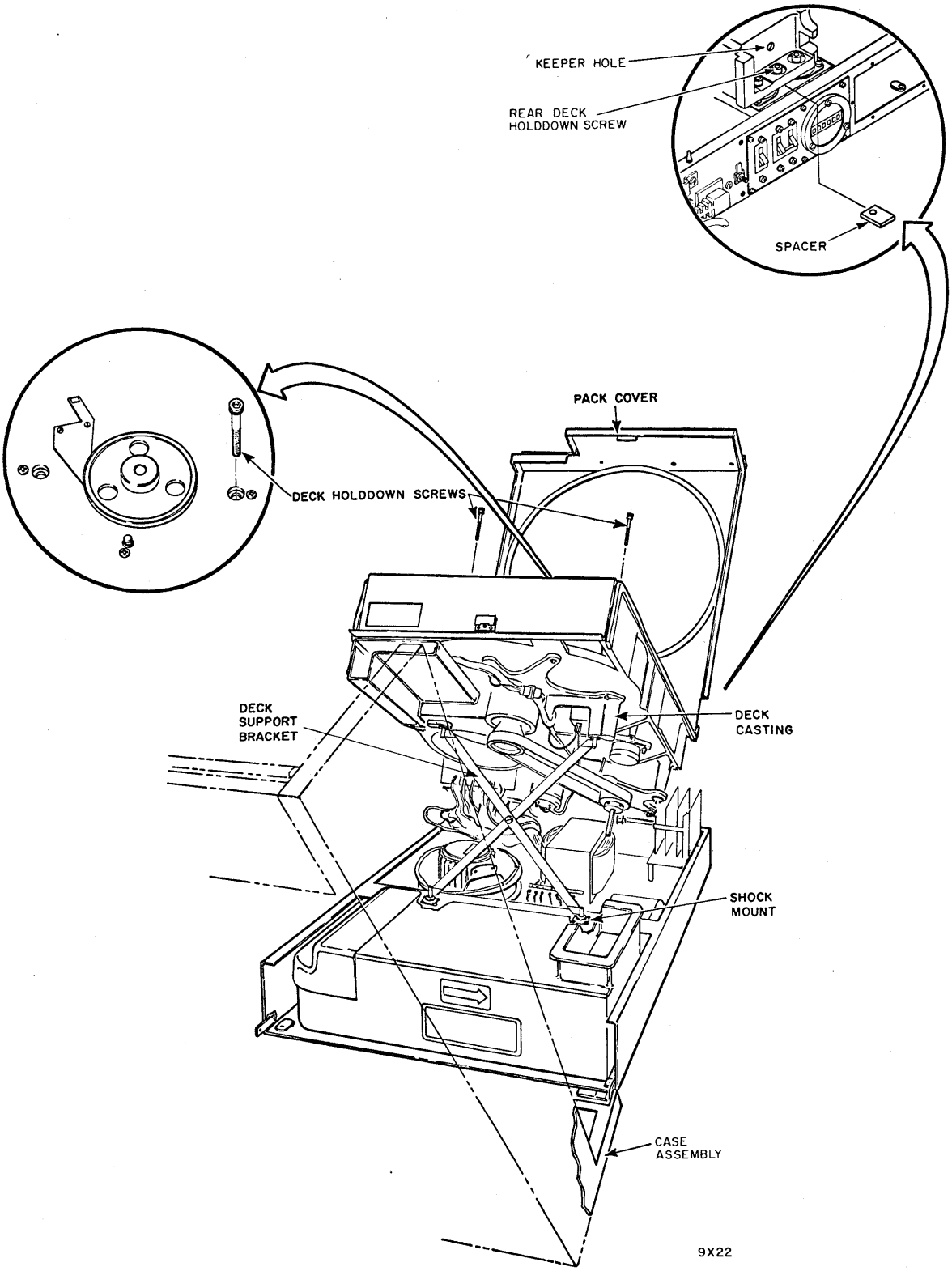

Figure 2-4. Deck Maintenance position (Sheet 1 of 2)
S/C 16 & Below

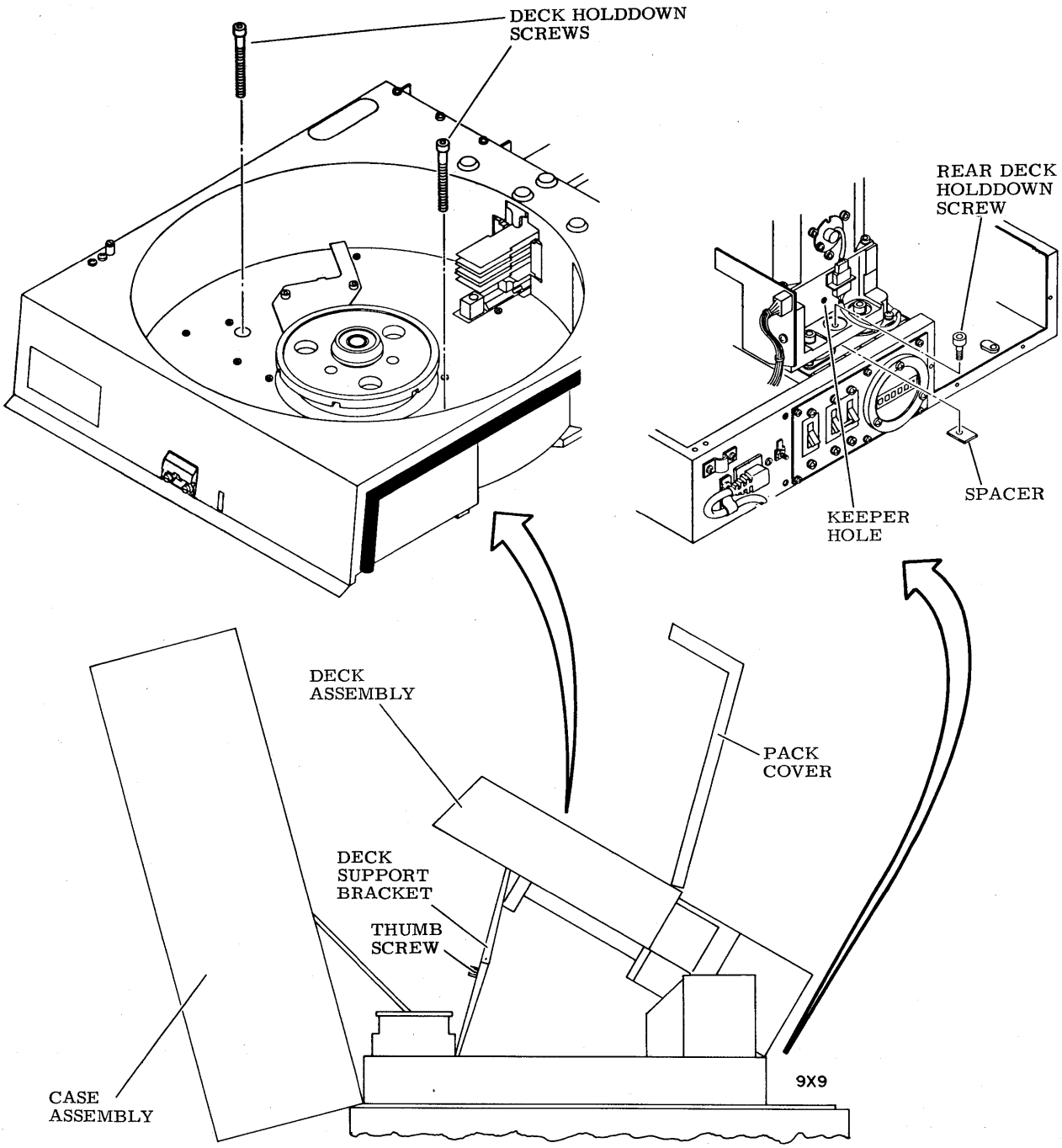

Figure 2-4. Deck Maintenance Position (Sheet 2)
S/C 17 & Above

1. Release 1/4-turn fastener securing logic chassis to rear of deck casting. Ensure that ring on 1/4-turn fastener does not interfere with logic chassis bracket when chassis is raised.

2. Loosen the two front clamping screws securing the front of the logic chassis.

3. Lift the rear of the logic chassis ewnough to clear the 1/4-turn fastener hole and slide the chassis back until it stops. This distance is approximately 19 mm (3/4 in).

4. Raise the logic chassis from the slide, up and over the voice coil until it comes to rest on the coil.

SECTION 2B

PREVENTIVE MAINTENANCE

GENERAL

This section provides all information necessary to perform the required preventive maintenance on a drive in the field. Proper performance of the drive is dependent on adequate and timely execution of preventive maintenance routines. Many potential drive problems can be caught and corrected by strict adherence to the preventive maintenance schedule.

Procedures in this section assume the reader is familiar with the information provided in Section 2A General Maintenance Information. Refer to section 2A for information on safety precautions, maintenance tools and materials, test point locations, and accessing information (the opening and closing procedures for the various components of the drive).

Table 2-5 provides the preventive maintenance index. The index consists of six levels of maintenance based on a calendar period or hours of operation, whichever comes first.

The index assumes that the drives are installed in a computer room environment, and as such has scheduled maintenance consistent with that assumption. If the installation site is something other than a computer room environment, the maintenance schedule needs to be adjusted accordingly. The main factor in setting maintenance intervals is the cleanliness of the installation site. Under no circumstances should the maintenance intervals exceed those specified in table 2-5.

The following are the definitions of the six preventive maintenance levels:

Level 1 - Weekly or 150 hours

Level 2 - Bimonthly or 1000 hours

Level 3 - Quarterly or 1500 hours

Level 4 - Semiannually or 3000 hours

TABLE 2-5. PREVENTIVE MAINTENANCE INDEX

Level	Est Time (Minutes)	Procedure
4	10	General Cleaning
4	5	Clean Primary Filter
6	20	Replace Absolute Filter
4	1	Clean Shroud and Spindle
4	2	Clean and Lubricate Lockshaft
4	5	Inspect and Clean Rails and Bearings
4	2	Check Power Supply Output
5	120	Check Head Alignment
2	20	Head Dusting *

*The Head Dusting level 2 interval is recommended for the average site. However, the interval may be shorter or longer or the procedure eliminated depending upon site conditions.

Level 5 - Annually or 6000 hours

Level 6 - Biennially or 9000 hours

PREVENTIVE MAINTENANCE PROCEDURES

GENERAL

Perform preventive maintenance in accordance with the tme or claendar schedule as specified in table 2-5. The following procedures are contained in this section in the order specified.

- General Cleaning
- Clean Primary Filter
- Replace Absolute Filter
- Clean Shroud and Spindle
- Clean and Lubricate Lockshaft

- Inspect and clean Rails and Bearings
- Check Power Supply Output
- Check Head alignment
- Head Dusting

GENERAL CLEANING

Since the drive is a precision machine and built to close tolerances, good housekeeping is essential to proper operation. A thorough cleaning on a regular basis prevents many problems. THis procedure assumes tht pwer is removed from the drive.

1. Carefully vacuum interior of cabinet and case, paying particular attention to flat surfaces where dust accumulates.

2. With deck in normal operating position, vacuum exterior surfaces of electronic assembly. Use a soft cloth dampened in a mild detergent solution to remove any greasy residue.

3. Raise deck to maintenance position and vacuum underside of deck and base asssembly. Again, use a dampened cloth to remove any residue.

4. Inspect cables and connections for any sign of damage and correct as necessary.

5. Inspect drive belt for signs of fraying or cracking. Replace belt as necessary.

6. Return deck ro normal operating postion and close case and door assemblies.

7. Using a soft cloth dampened in a mild detergent solution, carefully wipe all cabinet surfaces. Use care not to allow moisture to run into drive.

CLEAN PRIMARY FILTER

The primary filter must be kept clean in order to allow sufficient passage of air to keep the drive cool. If the filter cannot be cleaned by the following procedure, it must be

replaced. This procedure assumes that power has been removed from the drive.

1. Remove primary filter from drive:

   - For non-acoustic drives see figure 3-7, 3-10, or figure 3-11, depending on drives mounting configuration.

   - For acoustic drives see figure 3-3, sheet 3

2. Clean filter by agitating in mild detergent solution.

3. Rinse thoroughly in clean running water. Shake vigorously to remove excess water and allow to dry.

4. Spray filter thoroughly with filter coat or suitable substitute.

5. Replace filter in drive.

REPLACE ABSOLUTE FILTER

An adequate supply of clean air to the pack area is essential to proper operation of the drive. The absolute filter traps all dirt particles too small to be stopped by the primary fiolter. Eventually the filter becomes too clogged to yield a sufficient airflow, and it must be replaced. its useful life depends on the rives operating environment.

The user has two options: (1) replace the absolute filter at fixed intervals dependent on site environment or (2) obtain a pressure gauge (see table 2-1) and replace the absolute filter when it fails the testing procedure given below.

With the first option, replacement of the absolute filter is required once every two years when the drive is operated in a computer room environment. If the drive is operated in something other than a computer room environment, absolute filter replacement is required more often. In a non-computer room environment, it is suggested that the absolute filter be replaced every year or whenever there is doubt about the ability of the filter to pass air into the shroud area.

With the second option, maintenance personnel can periodically check the airflow through the absolute filter to determine the proper time for filter replacement. Regardless of a planned testing schedule, testing should be performed whenever there is doubt about the ability of the filter to pass air into the shroud area.

The following describes testing and replacement of the absolute filter.

Testing Absolute Filter

1. Remove power from the drive.

2. Gain access to absolute filter and determine whether filter has a hole and plastic plug for test purposes. If not,

   a. Remove filter from drive.

   b. Drill a 6.35 mm 0.25 in hole in the location shown in Figure 2-5.

   c. Thoroughly clean shavings from filter before reinstalling it in drive.

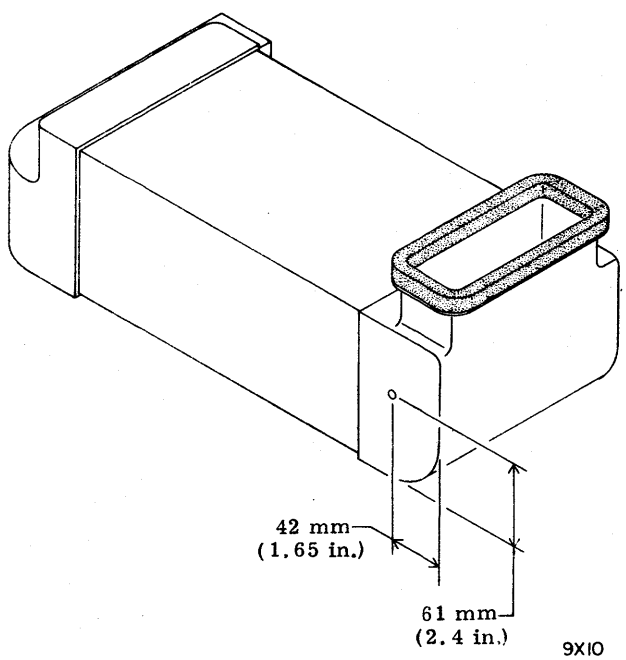

Figure 2-5. Drilling of Absolute Filter

3. Remove plastic plug and insert tubing attached to the differential pressure gauge (refer to list of Maintenance Tools and Materials).

4. Apply power to drive and load heads.

5. If pressure is 0.5 inch-water or less, filter should be replaced. If pressure is above 0.5 inch-water, filter need not be replaced at this time.

6. Remove tubing and insert plug. (Spare plastic plugs are included in the gauge test kit.) The plastic plug must be inserted at all times except when making pressure measurements.

7. Return drive to normal operation.

REPLACING ABSOLUTE FILTER

1. Remove power from drive and raise deck to maintenance position.

2. Remove screw and lockwasher securing filter retaining bracket (see Figure 3-30 Sheet 1).

3. Remove bracket by pivoting it toward front of drive and disengaging flange on bracket from slot in base pan.

4. Remove absolute filter by pulling it toward front of drive. It may be necessary to jiggle filter to disengage it from blower motor outlet.

5. Wipe base pan clean in area under absolute filter and around blower motor outlet.

6. Install new filter by sliding it in from front of drive and engaging it in blower motor outlet.

7. Install filter retaining bracket and secure with screw and lockwasher.

8. Return deck to normal operating position.

CLEAN SHROUD AND SPINDLE

In order to pevent head-to-disk contact, it is imperative that the pack area be kept clean. The following procedure assumes that power is removed from the drive and that the disk pack is removed from the spindle.

1. Carefully vacuum entire pack area.

2. Using a wad of adhesive type tape, remove any particles not removed during vacuuming.

3. Using a piece of lint free gauze dampened in media cleaning solution, wipe all surfaces of the shroud. Remove all smudges and dirt. Carefully clean all surfaces of spindle.

4. Close pack access cover immediately after cleaning to ensure that dust does not enter pack area.

CLEAN AND LUBRICATE LOCKSHAFT

In order to prevent damage to the lockshaft and the disk pack it is necessary to keep the threads in the top of the lockshaft clean. This procedure assumes that power is removed from the drive and that the disk pack is removed from the spindle.

1. Using a stiff brush or a sharp pointed instrument, remove old lubricant paste from threads in lockshaft.

2. Using a piece of lint free gauze dampened in media cleaning solution, wipe all surfaces of spindle to remove traces of lubricant paste.

3. Apply a thin coat of new lubricant paste to threads of lockshaft.

INSPECT AND CLEAN RAILS AND BEARINGS

In order to ensure that the carriage is able to move freely along the rails, it is essential that the rail and bearing surfaces be kept clean. Any obstruction to free movement of the carriage may cause cylinder address errors. This procedure assumes that power is removed from the drive and that the disk pack is removed from the spindle.

1. Remove magnet cover (see figure 3-17) by grasping edge of cover and snapping it out of place.

2. Grasp coil through opening in top of magnet assembly. Carefully and slowly push coil forward to extend heads.

3. Once head arms have cleared cams, gently slide carriage and coil assembly back and forth along full length of rails. While moving coil, be aware of any possible irregularity (bumps or jerks) in movement. A sudden irregularity indicates dirt on rails or bearings. Do not confuse pressure of flex leads and head leads with a sudden irregularity in motion. Pressure from leads is a smooth change.

4. If a sudden irregularity in motion was noted in previous step proceed to next step. If not sudden irregularity in motion was noted, cleaning is not required. Terminate procedure by returning carriage to heads unloaded position (fully retracted) and replace magnet cover.

5. Using a cotton swab dampened (not soaked) in media cleaning solution, clean rail and bearing surfaces. Access front portion of lower rail from interior of pack area. Access rear position of lower rail and all of top rail from sides of actuator. Raise logic chassis as required to gain access from left side of actuator. Move carriage back and forth while cleaning in order to ensure all surfaces are reached.

6. When rail and bearing cleaning is completed, repeat step 3 to ensure that carriage moves freely without sudden irregularities in its motion. If carriage now moves smoothly throughout its travel, proceed to step 7. If sudden irregularities persist, visually inspect rails and bearings using a strong light. Look for deterioration of rail or bearing surfaces. Surface deterioration requires replacement of defective parts. Since neither carriage nor rails are field replaceable, contact factory maintenance representative.

7. Return carriage to heads unloaded position (fully retracted) and replace magnet cover.

CHECK POWER SUPPLY OUTPUT

Perform the Plus and Minus 5 Volt Adjustment procedure contained in Section 2C Tests and Adjustments.

CHECK HEAD ALIGNMENT

Perform the Head Alignment procedure contained in Section 2C, Tests and Adjustments.

HEAD DUSTING

NOTE

Head dusting is a dry process. Do not use any type of cleaning solution.

1. Turn off drive motor.

2. Before removing the disk pack, use a lint-free cloth moistened with head and media cleaning solution to wipe off the top of the drive and around and behind the pack access cover.

3. Remove disk pack.

4. Set Power Supply and AC Power circuit breakers to Off.

5. Place index finger on the bottom surface of head arm assembly, as shown in figure 2-6. Avoid touching rear surface of head pad. Push up and pull the head arm assemblies toward the spindle to the point just before the head arms slide off the head cam. If the head arm assemblies are extended beyond this point, follow the directions in step 10 to move them to the retracted position; then repeat this step.

6. Use the following procedure to blow off the loose oxide dust particles from the flying surface, spoiler holes, and leading edge of each head. (See figure 2-7.)

WARNING

Aim nozzle of can of dust remover away from face to prevent personal injury in case hose snaps off nozzle.

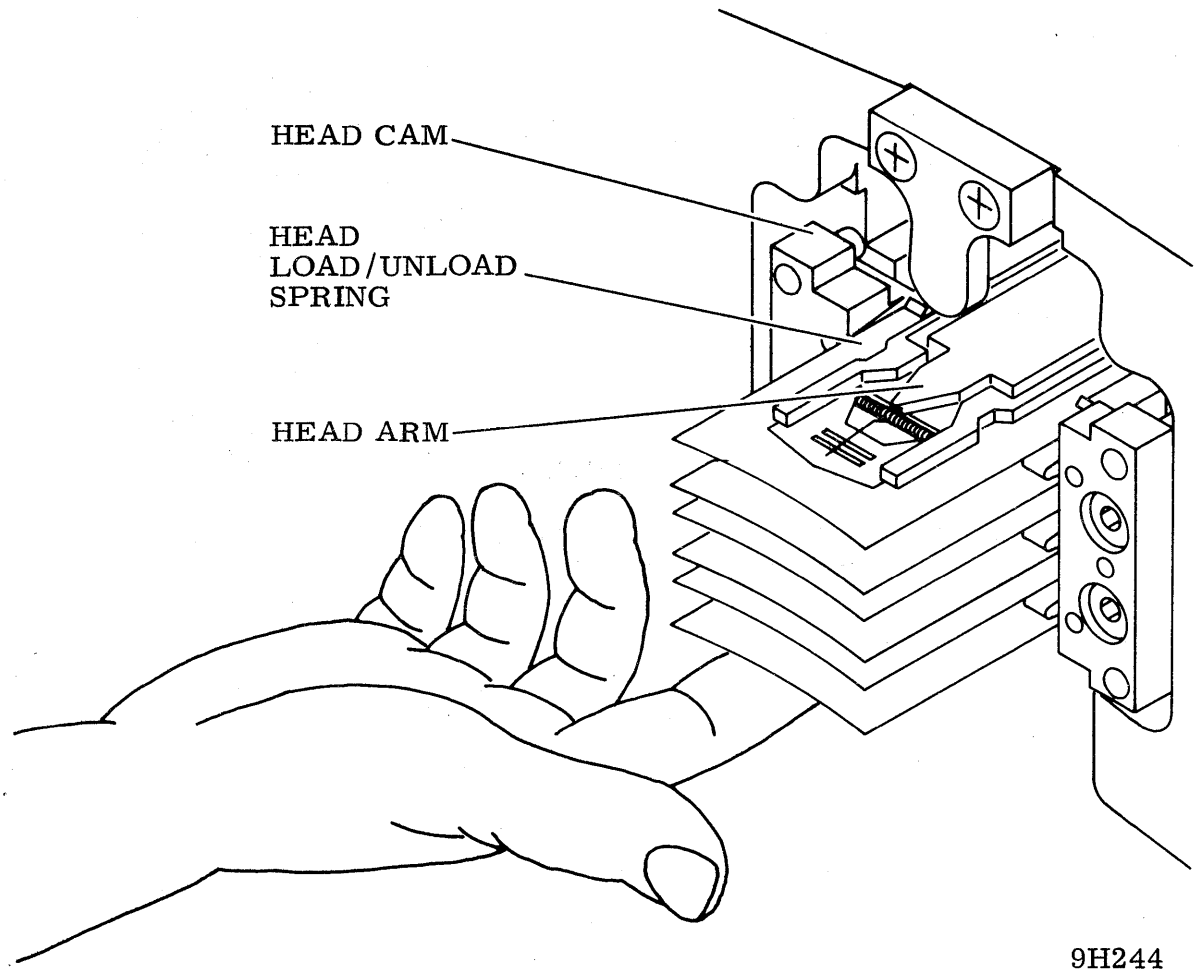

Figure 2-6. Positioning Head Arm Assemblies

NOTE

Keep can of dust remover in an upright position to prevent liquid propellant from spraying on the heads.

a. Connect plastic hose to nozzle of super dry dust remover can. (See figure 2-8.)

b. Set the can of dust remover on a flat surface inside the shroud.

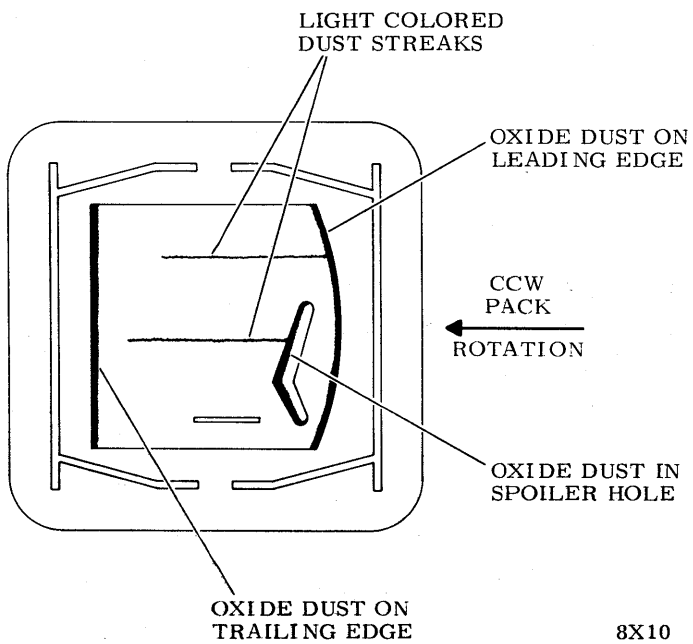

Figure 2-7. Typical Formation of Oxide Particles on Head Pad

NOTE

Always start with the top head and proceed to the next lower head, doing the bottom head last.

c. Hold end of plastic hose about 6 mm (1/4 in) from head to be cleaned. Aim it upward for downward-facing heads or downward for upward-facing heads.

d. While spraying, move hose back and forth six to eight times.

7. Buff the flying surface of each head as follows. (See figure 2-9.)

a. Hold a 200 mm (8 in) strip of lint-free gauze between the thumb and forefinger of both hands. Hold gauze tightly, not slack.

b. Place the gauze over a head and move the gauze back and forth eight to ten times on each head while applying light pressure.

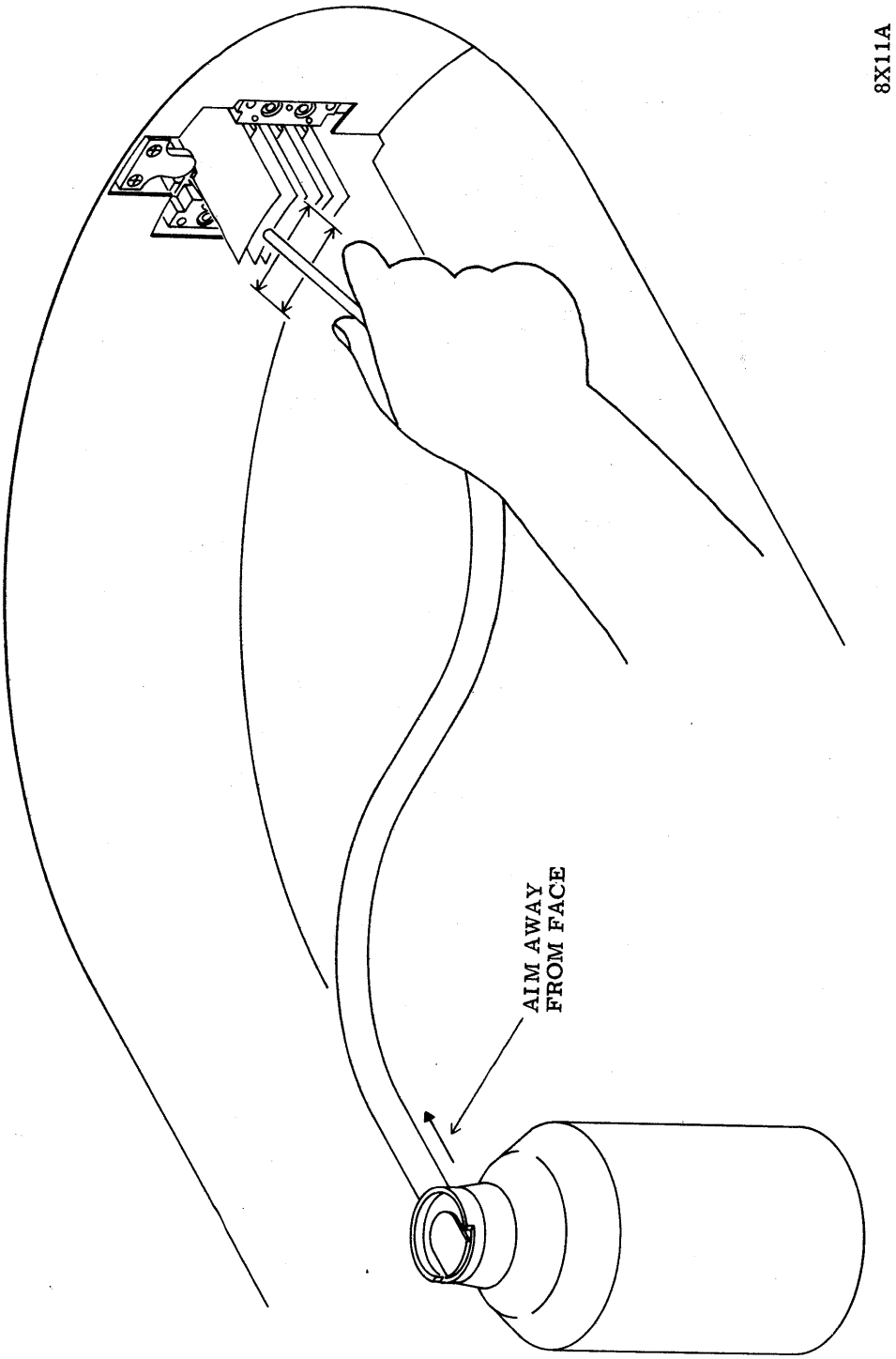

Figure 2-8. Using Super Dry Dust Remover

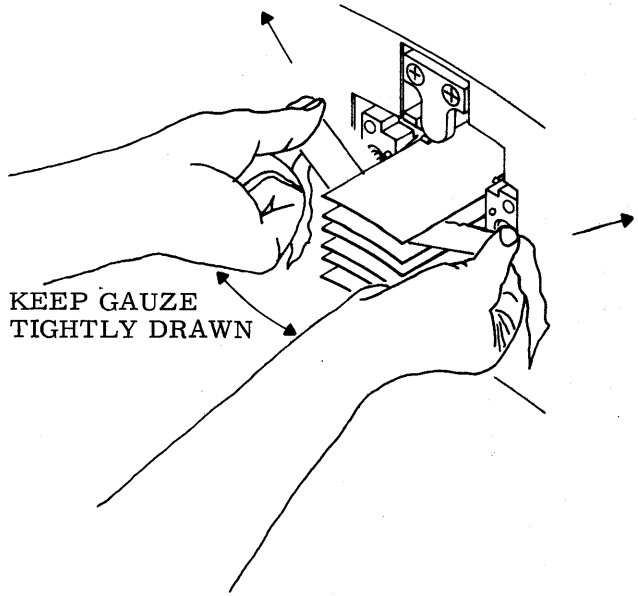

DOWN FACING HEADS

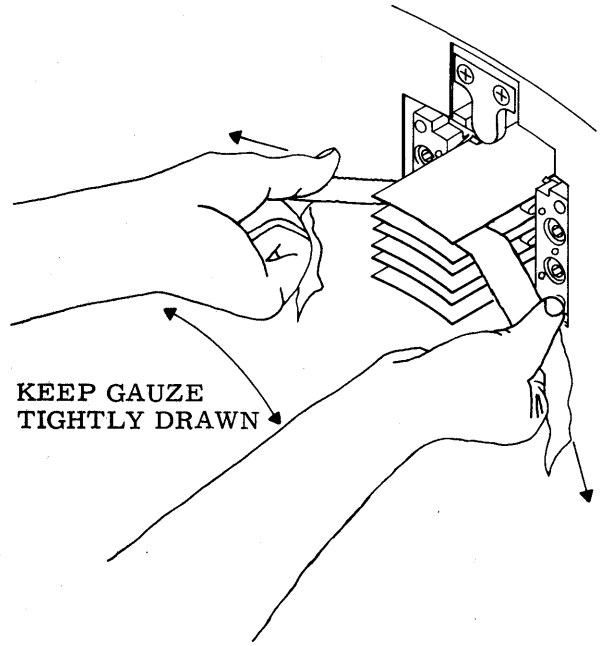

UP FACING HEADS

8X12A

Figure 2-9. Wiping Head Pads

c. Buff each head using the same piece of gauze.

d. Repeat a through c using a new piece of gauze each time until there is no longer any evidence of oxide on the gauze.

If, after buffing heads three times, the gauze still shows evidence of oxide, the heads will have to be removed from the drive and cleaned as described in the head cleaning procedure in this manual.

8. Blow off heads again using the super dry dust remover, as in step 6. Be sure all lint and dust are removed.

9. Inspect heads with a high intensity light to see if any loose oxide dust particles remain. Use a two-inch minimum square mirror to view heads facing downward.

   If after inspection, any head still shows evidence of oxide on flying surface, remove the head and clean or replace it as described in this manual.

10. When finished dusting heads, place the index finger on surface of the carriage indicated by the arrow in figure 2-10. Push the head arm assemblies back to the retracted position. Avoid touching the head load/unload springs.

11. Set Power Supply and AC Power circuit breakers to On.

12. With the air blower on, wipe the inside of the shroud using a lint-free cloth moistened with head and media cleaning solution.

NOTE

If available, use scratch pack in steps 13 and 14. Replace scratch pack with customer pack after allowing drive to run on scratch pack for one minute.

13. Place disk pack in drive and close pack access cover. Allow the air flow to purge the system for one minute.

14. Start up drive and observe that drive functions properly.

15. Return drive to computer operator.

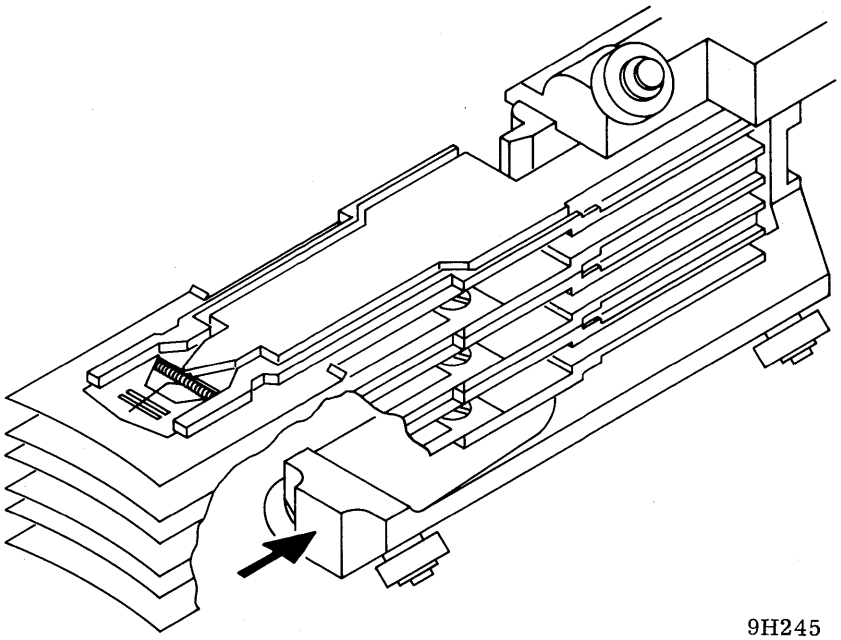

Figure 2-10. Returning Head Arm Assembly to retracted position

The following materials are required for head dusting (see the list of Maintenance Tools and Materials for the applicable CDC part numbers):

Description

1. Super Dry Dust Remover

2. Hose Assembly

3. High Intensity Light

4. Lint-free Tube Gauze

5. Two Inch Minimum Square Front Surface Mirror

The following material is used only for moistening the lint-free cloth to wipe off the top of the pack access cover and inside the shroud:

6. Head and Media Cleaning Solution

7. Lint-free cloth

SECTION 2C

TEST AND ADJUSTMENTS

GENERAL

This section provides information on all the electrical test and adjustments which can be performed in the field. The adjustments contained here are limited to those which can be performed at the drive level. These tests should only be performed as required elsewhere in this manual, or when there is suspicion that the drive is not functioning properly. A drive that passes all the requirements in this section may be considered operationally acceptable. If any of the adjustments, contained in this section, cannot be completed satisfactorily, terminate the procedure and perform trouble analysis.

Mechanical adjustments are contained in the Repair and Replacement section. A person performing these tests and adjustments should already be familiar with the information contained in the General Maintenance Information section. Refer to that section for information on safety precautions, maintenance tools and materials, test point locations, and information on opening and closing of the various components of the drive.

These procedures assume that an FTU is connected to the drive (or that suitable software is available), that a scratch pack is installed (or CE pack where noted), and that the drive is powered on. All the following tests are written, providing first a check procedure, and then the adjustment. If the drive meets the criteria of the check, there is no need of the adjustment.

The following procedures are contained in this section, in the order specified:

- Plus and Minus 5 Volt Adjustment
- Head Arm Alignment
- Velocity Gain Adjustment (40 MB)
- Velocity Gain Adjustment (80 MB)

PLUS AND MINUS 5 VOLT ADJUSTMENT (3 CARD POWER SUPPLY)

This procedure checks the output of the plus and minus 5-volt power supplies while the drive is doing repeat seeks. Power supply outputs are checked at the logic chassis backpanel. Therefore, the supplies are being checked in a manner to account for both line loss and loading.

This procedure assumes that the FTU is connected to the drive, a scratch pack is installed, and power is applied.

CAUTION

Drive should not be operated for extended period with logic chassis in maintenance position. Loss of cooling air (when logic chassis is raised) could cause drive to overheat.

1. Raise logic chassis to maintenance position.
2. Connect digital volt/ohmmeter between GND AND +5 V fastons on logic chassis backpanel.
3. Command drive to do repeat seeks between cylinders 0 and 32.
4. Plus 5-volt output should be from +5.05 to +5.15 volts. If not, adjust +5 V potentiometer on card A1A03 (see figure 2-11) until output is within specification.
5. Move volt/ohmmeter leads to -5 V faston.
6. Minus 5-volt output should be from -5.05 to -5.15 volts. If not, adjust -5 V potentiometer on card A1A03 (see figure 2-11) until output is within specification.
7. If any adjustment was necessary in preceeding steps, recheck both outputs.
8. When both power supply outputs are within specification, restore drive to normal operation.

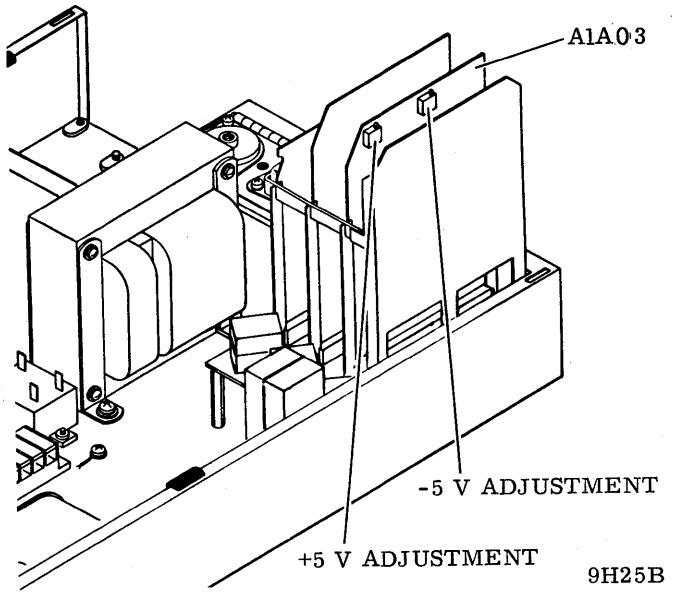

Figure 2-11. Power Supply Adjustment Locations (3 Card Power Supply)

PLUS AND MINUS 5 VOLT ADJUSTMENT (2 CARD POWER SUPPLY)

This procedure checks the output of the plus and minus 5-volt power supplies while the drive is doing repeat seeks. Power supply outputs are checked at the logic chassis backpanel. Therefore, the supplies are being checked in a manner to account for both line loss and loading.

This procedure assumes that the FTU is connected to the drive, a scratch pack is installed, and power is applied.

CAUTION

Drive should not be operated for extended period with logic chassis in maintenance position. Loss of cooling air (when logic chassis is raised) could cause drive to overheat.

1. Raise logic chassis to maintenance position.

2. Connect digital volt/ohmmeter between GND and +5 V fastons on logic chassis backpanel.

3. Command drive to do repeat seeks between cylinders 0 and 32.

4. Plus 5-volt output should be from +5.05 to +5.15 volts. If not, adjust +5 V potentiometer on card A1A01 (see figure 2-11) until output is within specification.

5. Move volt/ohmmeter leads to -5 V faston.

6. Minus 5-volt output should be from -5.05 to -5.15 volts. If not, adjust -5 V potentiometer on card A1A01 (see figure 2-4) until output is within specification.

7. If any adjustment was necessary in preceeding steps, recheck both outputs.

8. When both power supply outputs are within specification, restore drive to normal operation.

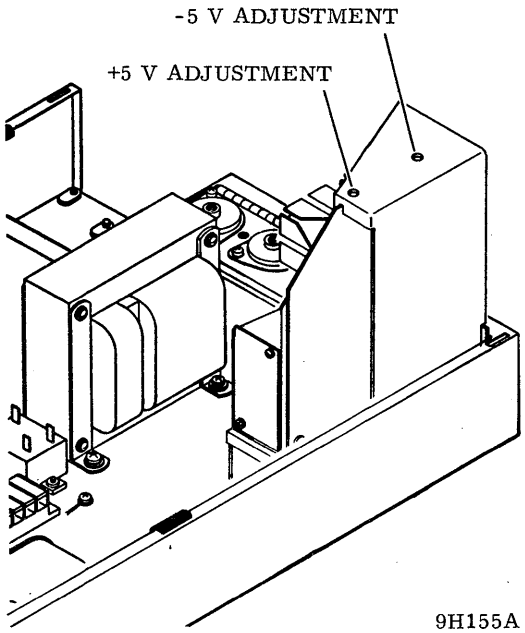

Figure 2-11. Power Supply Adjustment Locations (2 Card Power Supply)

HEAD ALIGNMENT

GENERAL

Alignment of the heads is checked under the following conditions:

- During initial installation of the drive.
- After replacing one or more head arm assemblies.
- When misalignment of one or more heads is suspected. (For example, inability to read a pack written on another drive).

If it is determined that a head is misaligned, the head arm is adjusted to bring the alignment of the head within specifications. Figure 2-12 is a flowchart summarizing the basic functions of the head alignment check and adjustment procedure.

Head alignment is performed by using a Field Test Unit (FTU) or by using the controller, microprogram diagnostics, head alignment card and meter. This procedure applies only to the method using an FTU. Refer to the FTU maintenance manual for switch settings and functions called for in this procedure.

When performing head alignment, give special consideration to the following:

Thermal Stabilization - In order to ensure accuracy during head alignment, it is important that the drive, CE pack, and FTU be at their normal operating temperature. This requires that all three be connected and allowed to operate (pack turning and heads loaded to cylinder zero) for a minimum of 60 minutes. If head alignment is being performed on more than one drive, and provided that the pack was taken immediately from a previous drive, and provided that the drive under test has been operating with heads loaded for a minimum of 60 minutes preceding tests; then the CE pack only requires a 14-minute stabilization time.

Alignment Tool - Use only the head alignment tool specified in the maintenance tools and materials table. Use of a different tool may cause damage to head arm or carriage. Always inspect the adjustment end of tool prior to use. Toool must be free of nicks and scratches and must have a polished surface where it enters the carriage alignment hole. If any aluminum deposits are present, polish tool surface with crocus cloth. Any other

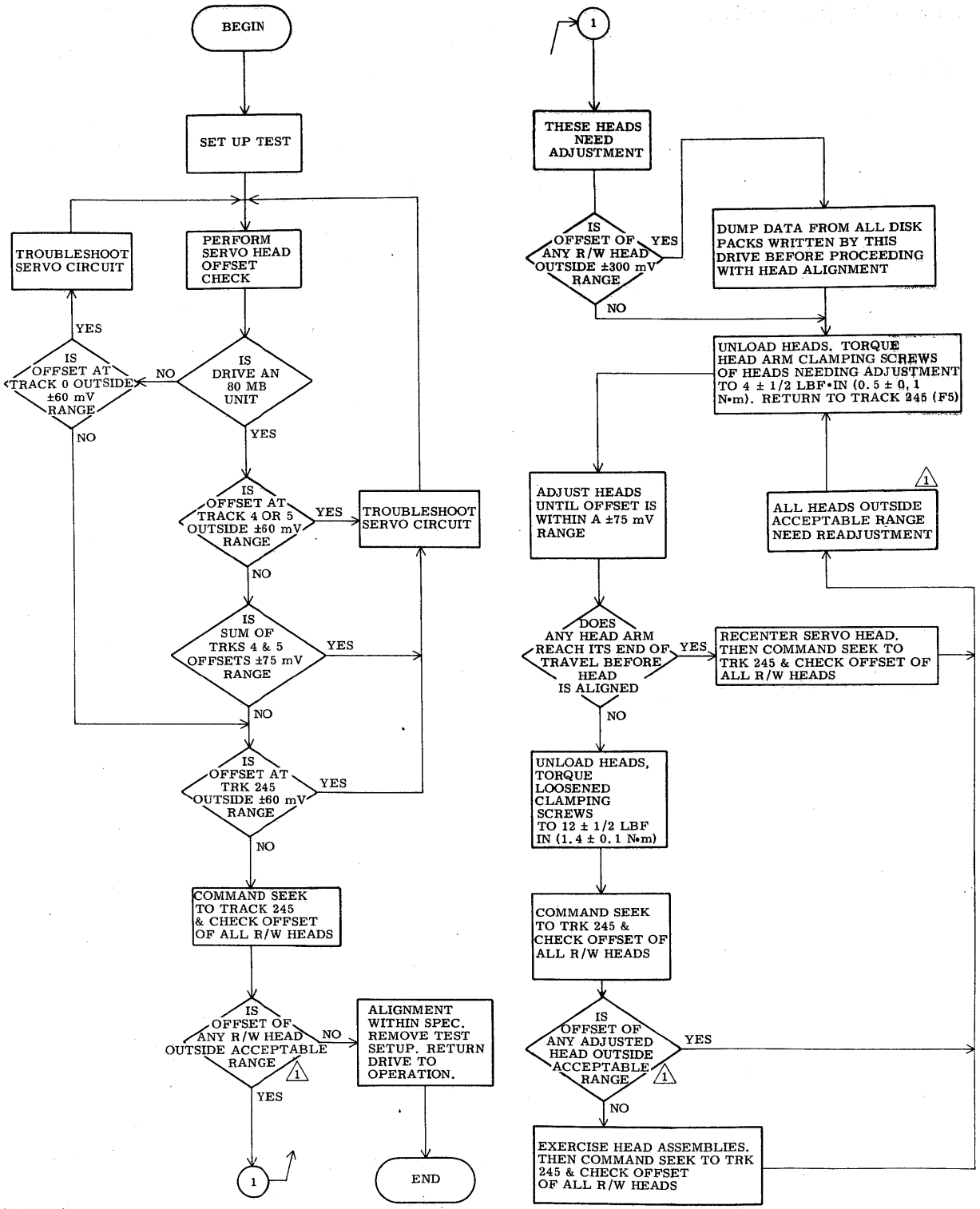

Figure 2-12. Basic Head Alignment Check & Adjustment Procedure

polishing medium will damage the tool. Do not use a defective tool; repair or replace tool if damage exists. When using tool, position it so that pin in end of tool engages alignment slot in head arm. The tool should slip easily through the alignment hole in the carriage and into the alignment slot in the head arm. If anything more than a small amount of force is required to adjust the head, the tool is probably binding in the hole of the carriage. Ensure that alignment tool is kept perpendicular to hole in carriage at all times.

Carriage Locking - During the alignment procedure (when the heads are over the alignment track) the carriage locking pin and ring assembly must be installed in the ALIGN TRACK LOCK hole in the rail bracket assembly. This locks the carriage in one head alignment position. Failure to install the pin and ring assembly would allow the carriage to retract if any emergency retract signal were generated. Since your hands are in the actuator during the head alignment procedure, the retract could be dangerous.

CAUTION

Should an emergency retract condition be generated when the locking pin is in the ALIGN TRACK LOCK hole, the following results may occur:

- Blown fuses,
- Tripped dc circuit breaker
- Blown power amplifier transistors, and
- Unretracted heads on a stationary CE pack.

Carefully observe the instructions regarding the installation and removal of the carriage locking pin and ring assembly.

INITIAL SETUP

1. Install CE disk pack and perform thermal stabilization.
2. Set AC POWER and POWER SUPPLY circuit breakers to OFF.
3. Raise case assembly to maintenance position.
4. Install head alignment card into location A2A02.
5. Raise logic chassis.

6. Connect FTU to drive. Refer to FTU maintenance manual for installation instructions.

7. Install terminator on I/O connector. If unit is dual channel, install terminator on I/O connector of channel being used by FTU.

8. Connect meter cables between head alignment card and FTU null meter. (Refer to figure 2-13).

9. Connect oscilloscope to test point Z (ground) and test point Y (dibits) on head alignment card.

10. Install head alignment cable between A2A02 pins 8-11 A and B and A3A02 J104.

11. Set AC POWER and POWER SUPPLY circuit breakers to ON.

12. Press START switch to start drive motor and load heads.

CAUTION

The CE disk pack has odd-even dibits on tracks 000 through 330 only. Do not attempt to access beyond cylinder 330.

SERVO HEAD OFFSET CHECK

1. Set head alignment card S/RW switch to S and X.1X1 switch to X.1.

2. Command continuous seeks between cylinders 240 and 245 for a minimum of 30 seconds.

3. Command direct seek either to cylinder 000 (for 40 MB drive) or 004 (for 80 MB drive).

4. Observe dibit pattern on oscilloscope. It should be similar to that shown on figure 2-13.

5. Toggle P/N switch to both P and N postitons and record null meter readings. If both P and N readings are less than 50 mV, the X.1X1 switch can be set to X1 position for more accurate readings.

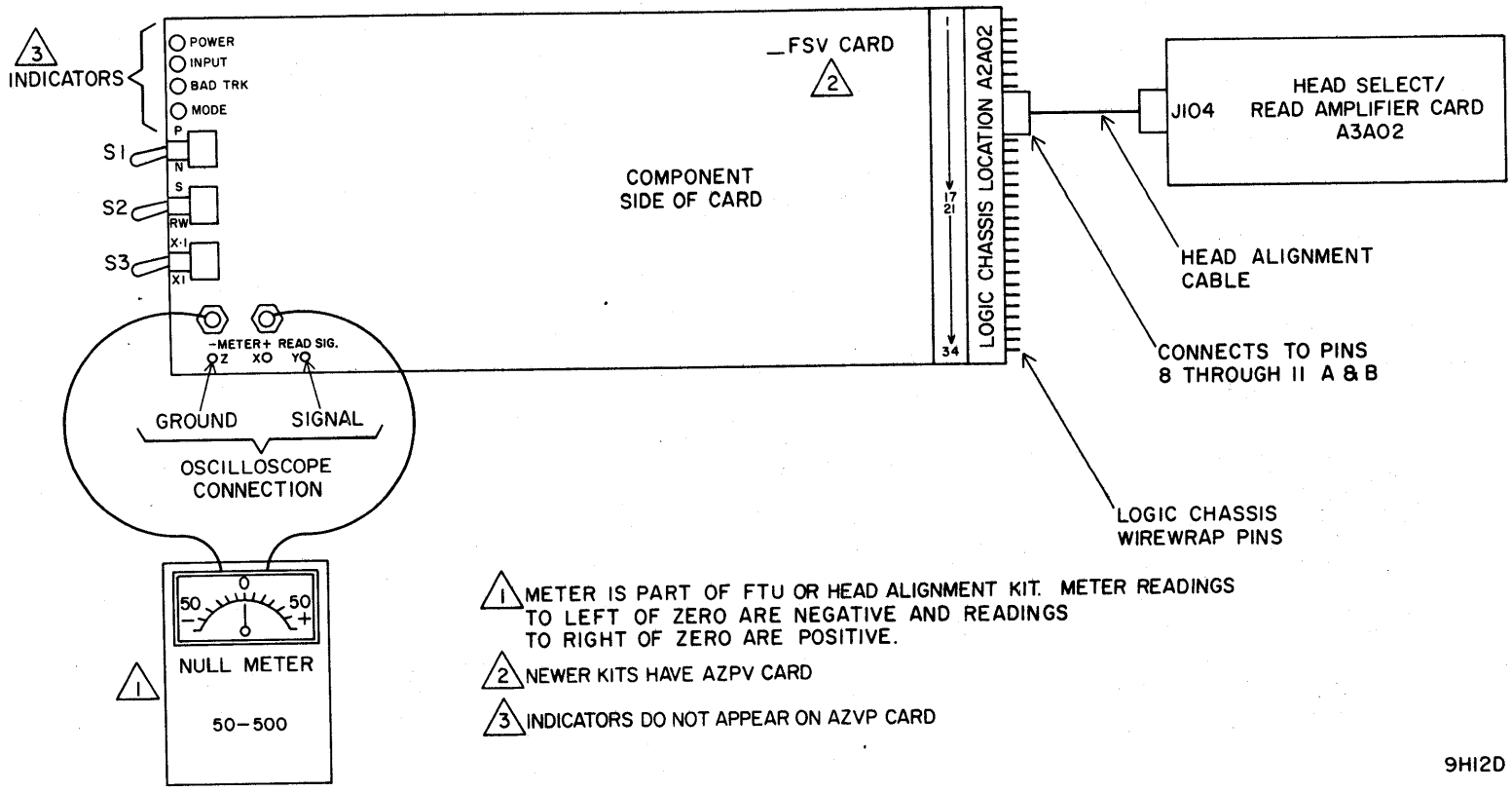

Figure 2-13. Head Alignment Setup

OSCILLOSCOPE SETTINGS

LOGIC GND TO SCOPE GND

VOLTS / DIV
- CH 1 - 20MV/CM
- CH 2 - NOT USED

TIME / DIV
- A - 1μS/CM
- B - NOT USED

TRIGGERING
- A- +INTERNAL
- B- NOT USED

PROBE CONNECTIONS
- CH 1 TO TPY (RD SIGNAL) ON HD ALIGNMENT CARD
- CH 2 TO NOT USED

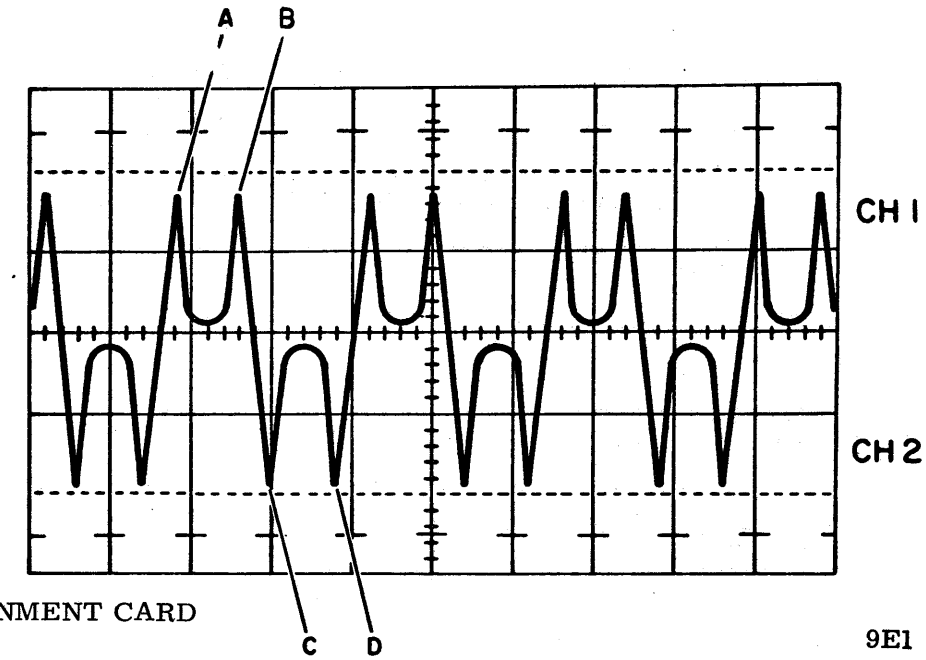

9E1

Figure 2-14. Head Alignment Waveform

6. Calculate head offset by using the following formula:

$$(P) - (N) = OFFSET$$

Where P is meter reading with P/N switch in P position and N is meter reading with switch in N position. Meter readings to right of zero are positive and meter readings to left of zero are negative.

Example: P = +20 N = +15

(P) - (N) = (+20) - (+15) = +5

Example: P = +20 N = -15

(P) - (N) = (+20) - (-15) = +35

Example: P + -20 N = +15

(P) - (N) = (-20) - (+15) = -35

7. Record offset calculated in step 6.

8. Evaluate servo head offset as follows:

- If offset ranges between +60 mV and -60 mV, it is acceptable to proceed with head alignment.
- If offset is outside ±60 mV range, it is unacceptable. In this case, trouble shoot servo system before proceeding with head alignment.

NOTE

If performing head alignment on a 40 MB drive, skip steps 9 and 10.

9. Command direct seek to cylinder 005 and repeat steps 4 through 8.

10. Add offset readings from cylinders 004 and 005. This sum should range between +75 mV and -75 mV. If it does not, troubleshoot servo system.

Example 1:

$P_4 = -25$ $N_4 = -15$

(P) - (N) = (-25) - (-15) = -10 mV

$P_5 = +10$ $N_5 = -10$

(P) - (N) = (+10) - (-10) = +20 mV (-10) + (20) = +10 mV

Sum is within ±75 mV range and is therefore acceptable.

Example 2:

$P_4 = +30$ $N_4 = -10$

(P) - (N) = (+30_ - (-10) = +40 mV

$P_5 = +15$ $N_5 = -30$

(P) - (N) = (+15) - (-30) = +45 mV (+40) + (+45) = +85 mV

Sum is outside ±75 mV range and is therefore unacceptable. Servo system troubleshooting is required.

11. Command direct seek to cylinder 245, install carriage locking pin into alignment hole (refer to figure 2-15) and repeat steps 4 through 8.

READ/WRITE HEADS CHECK AND ADJUSTMENT

1. Set R/RW switch to RW. Observe that dibit pattern is similar to that shown on figure 2-14.

2. Calculate offset of all read/write heads by using same method given in steps 5 and 6 of Servo Head Check.

3. Remove carriage locking pin.

CAUTION

If any offset exceeds a 0 ±300 mV range, those heads are excessively misaligned. Therefore, to avoid possible loss of data, transfer data from packs written with those heads to other storage before proceeding with alignment.

4 Evaluate read/write head offset as follows.

a. When using same CE pack as used for last alignment, offsets must range between +150 mV and -150 mV. If all offsets are within this range, alignment is satisfactory so proceed to step 16.

b. When using a different CE pack than the one used for last alignment, offsets must range between +225mV and -225 mV. If all offsets are within this range, alignment is satisfactory so proceed to step 16.

c. If any offsets are outside acceptable range, as defined in steps a or b (whichever applies), these heads are misaligned. Proceed to step 5.

5. Press START switch to stop drive motor and unload heads.

6. Remove connector support bracket (see figure 2-32).

7. Loosen head-arm mounting screws securing heads requiring alignment and torque these screws to 0.5 ±0.1 N·m (4 ±1/2 lbf·in).

8. Press START switch to start drive motor and load heads.

9. Command direct seek to cylinder 245.

CAUTION

Use extreme care to avoid short circuit contact with write driver board when installing or removing head alignment tool and torque wrench.

NOTE

When performing alignment on an 80 MB drive, the force exerted during adjustment can move the heads from the alignment cylinder to an adjacent cylinder. This will result in an improper alignment. Prevent this by connecting a jumper from A2B09-11A (Seek Error) to ground. However, be sure to remove the jumper before commanding the drive to perform another seek.

10. Align heads as follows:

a. Select head to be aligned.

WARNING

To prevent personal injury in case of an emergency retract, install carriage locking pin in head alignment hole prior to positioning head alignment tool. Be sure to remove pin before next seek is performed.

b. Install head alignment tool so that tool pin engages head-arm alignment slot (refer to figure 2-15).

c. Observe oscilloscope and adjust head to obtain balanced dibit pattern. Pattern is balanced when point A amplitude equals point B and point C equals point D (see figure 2-13).

d. Observe null meter and adjust head until offset ranges between +75 mV and -75 mV. Calculate offset as described in steps 5 and 6 of Servo Head Check. Occasionally, a head cannot be aligned because its adjustment slot is at its end of travel. If this occurs, check position of servo head-arm adjustment slot and, if necessary, recenter it. However, it should be noted that any slight adjustment of the servo head required realignment of all read/write heads. Torque servo head to 1.4 ±0.1 N·m (12 ±1/2 lbf·in).

e. Repeat steps a through d for all heads to be aligned.

11. Remove carriage locking pin and also remove jumper from A2B09-11A (if it was installed).

12. Press START switch to stop drive motor and unload heads.

13. Torque head-arm clamp screws of each head adjusted to 1.4 ±0.1 n·m (12 ±1/2 lbf·in). While torqueing screws, use only straight arm allen wrench and keep it as perfectly aligned as possible with screws. If care is not taken during this operation, head may be pushed out of alignment.

14. Check each head adjustment to see if torqueing screws affected alignment. If any heads are outside ±150 mV range, readjust them as directed in steps 7 through 13.

15. Perform the following to ensure that heads will remain aligned under normal operating conditions.

    a. Command continuous seeks between cylinders 240 and 245 for a minimum of 30 seconds.

    b. Unload and load heads at least twice.

c. Command direct seek to cylinder 245.

d. Check alignment of each head adjusted. If any heads are outside acceptable range (as defined in step 4), repeat this procedure starting with step 10.

16. Press START switch to stop drive motor.

17. Set AC POWER and POWER SUPPLY circuit breakers to OFF.

18. Disconnect test setup and remove alignment card and terminator (if installed).

19. Replace connector support bracket (see figure 2-32).

20. Lower logic chassis to normal operating position.

21. Lower case assembly.

22. Remove CE pack.

23. Restore drive to on-line operation.

VELOCITY GAIN ADJUSTMENT (40 MB)

The following procedures provide information on checking and, if necessary, adjusting the servo system veolcity gain. if the precedures cannot be completed satisfactorily, terminate, and begin performing trouble an analysis.

The Velocity Gain procedure will vary depending on the card type found in location A12. For units using the BLQV or LLQV, perform procedure a. For units using the MLQV (or any later generation card, NLQV for example), perform Procedure B.

Both procedures assume that the FTU is connected, and that a scratch pack is installed on the drive.

PROCEDURE A. WITH BLQV OR LLQV

1. With the drive case closed, command random seeks for 10 minutes minimum in order to thermally stabilize drive.

2. Stop random seeks and set up oscilloscope per figure 2-8. Oscilloscope ground references must be as shown.

3. Command 410 (hex 19A) cylinder continuous seeks and adjust oscilloscope trigger level to obtain waveform shown in figure 2-8.

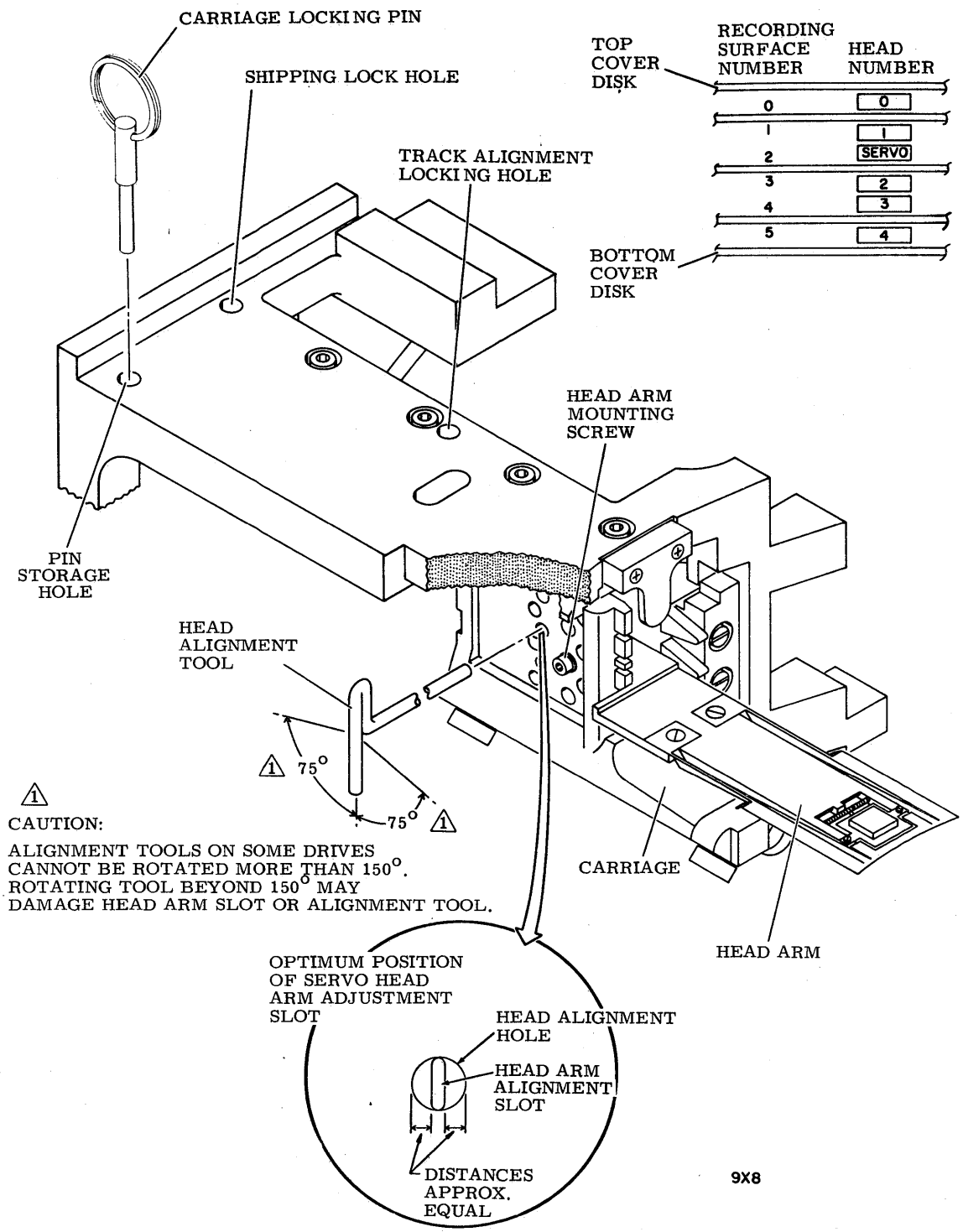

Figure 2-15. Head Arm Alignment

4. Measure amplitude of Velocity signal (displayed on channel 2) and null-to-null time of Fine Position Analog signal (displayed on channel 1). Amplitude of Velocity signal and null-to-null time of Fine Position Analog signal must correspond as shown in table 2-6.

TABLE 2-6. 40 MB VELOCITY VOLTAGE VS NULL TIME

NOTE

Voltage readings in column A are ±.1 volt.
Null-to-null readings in column B are ±4 μsec.

A (volts)	B (μsec)	A (volts)	B (μsec)
5.2	100	6.7	77
5.3	98	6.8	76
5.4	96	6.9	75
5.5	94	7.0	74
5.6	93	7.1	73
5.7	91	7.2	72
5.8	89	7.3	71
5.9	88	7.4	70
6.0	86	7.5	69
6.1	85	7.6	68
6.2	84	7.7	67
6.3	82	7.8	67
6.4	81	7.9	66
6.5	80	8.0	65
6.6	79		

NOTE

Velocity amplitude changes as null-to-null time of Fine Position Analog signal is adjusted. Be sure th check both measurements while performing adjustment.

5. If time versus voltage relationship, measured in previous step, was not as specified in table, perform velocity transducer gain adjustment. On card A2A07, adjust potentiometer E2R6 (see figure 2-17 until relationship between time and voltage is as specified in table 2-6.

6. When velocity transducer gain adjustment is correct, change oscilloscope setup to that shown in figure 2-18.

Figure 2-16. 40 MB Velocity Transducer Gain Waveforms

OSCILLOSCOPE SETUP

	VOLTS / DIV	TEST POINT	SIGNAL NAME
CH 1 - (USE X 10 PROBE)	0.2 V	A2A08 TPF	+ FINE POSITION ANALOG
CH 2 - (USE X 10 PROBE)	0.1 V	A2A07 TPF	+ VELOCITY

	SLOPE / SOURCE	TEST POINT	SIGNAL NAME
TRIGGER A - (USE X 10 PROBE)	+/EXT	A2B09 14B	-T ≥ 128
TRIGGER B - (USE X PROBE)	NOT USED		

TIME / DIV: 20 μs **MODE TRIGGER:** CHOP

ADDITIONAL SETTINGS: NONE

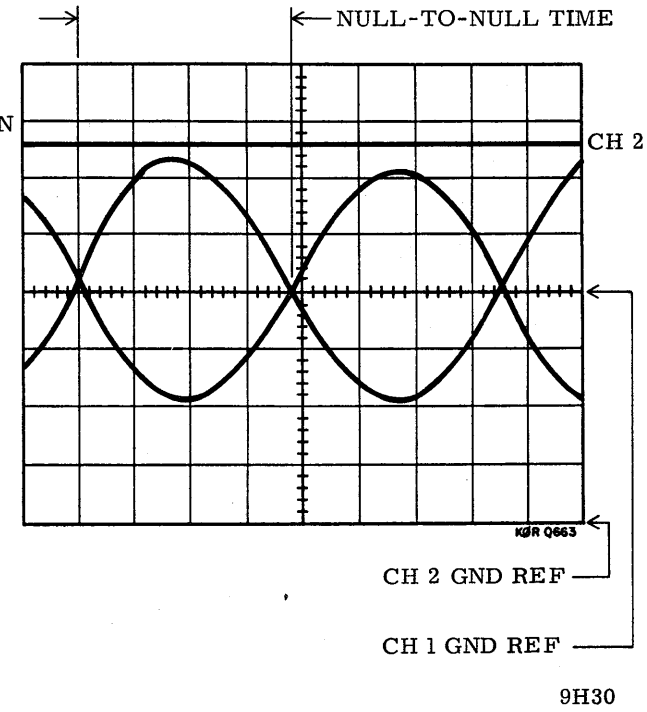

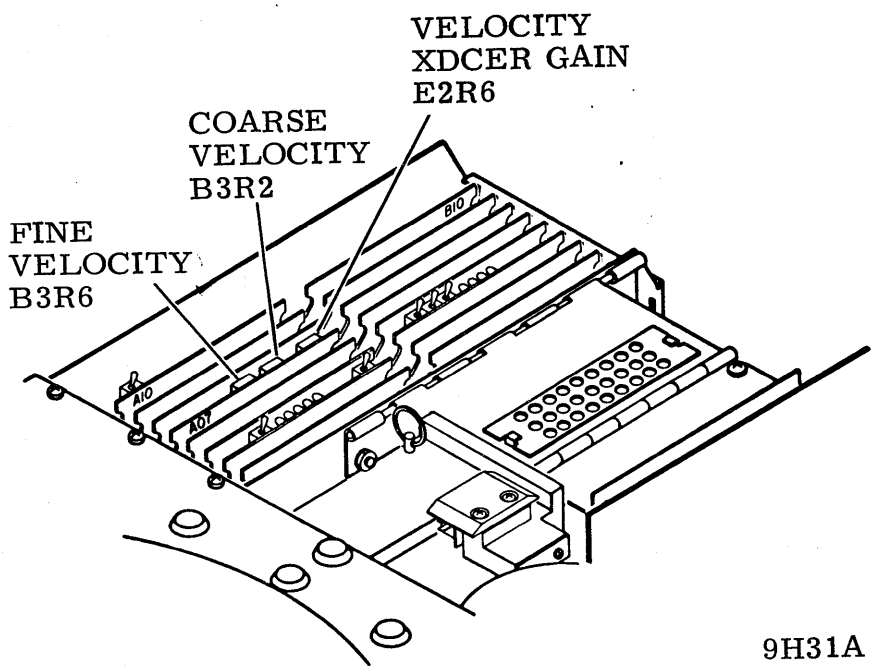

Figure 2-17. 40 MB Velocity Gain Adjustment Locations

7. Measure full length seek time. Time between On Cylinder Sense pulses (displayed on channel 2) should be 50 to 52 milliseconds.

8. If full length seek time is not as specified, perform coarse velocity adjustment. On card A2A07, adjust coarse velocity potentiometer B3R2 (see figure 2-17) until time between On Cylinder Sense pulses is 50 to 52 milliseconds.

NOTE

Position of oscilloscope probe connections does not change between coarse and fine velocity adjustments.

9. When coarse velocity adjustment is correct, change oscilloscope setup to that shown in figure 2-19.

10. Command random seeks.

11. Fine Position Analog signal (displayed on channel 1) should show a slight ripple just as it is nulling out. Also, there could be a slight overshoot of the forward and reverse signals. On Cylinder Sense signal should be

relatively stable. Referring to figure 2-11, note difference between Velocity Too Fast, Velocity Too Slow, and Correct Velocity.

12. If overshoot of Fine Position Analog signal and jitter of On Cylinder Sense signal are not approximately as shown in figure 2-19, (correct velocity) perform fine velocity adjustment. On card A2A07, adjust fine velocity potentiometer B3R6 (see figure 2-17 until velocity is as fast as possible without excessive overshoot or breakup of On Cylinder Sense waveform.

13. If fine velocity adjustment was required in previous step, repeat coarse velocity adjustment. Continue to perform adjustments until both coarse and fine velocity adjustments meet specifications.

14. Return drive to normal operation

PROCEDURE B. WITH MLQV OR LATER

1. With the drive case closed, command random seeks for 10 minutes minimum in order to thermally stabilize drive.

2. Stop random seeks and set up oscilloscope per figure 2-20. Oscilloscope ground references must be as shown.

3. Command 410 (HEX 19A) cylinder continuous seeks and adjust oscilloscope trigger level to obtain waveform shown in figure 2-20.

4. Measure full length seek time. Time between On Cylinder pulses should be 52 ±2 milliseconds.

5. If full length seek time is not as specified, perform velocity gain adjustment. On card A2A07, adjust velocity gain potentiomenter E2R6 (see figure 2-21) until time between leading edges of On Cylinder pulses is 52 ±2 milliseconds.

6. Return drive to normal operation.

VELOCITY GAIN ADJUSTMENT (80 MB)

This procedure provides information on the checking and, if necessary, adjusting of the 80 megabyte servo system velocity signal. If the adjustment cannot be completed staisfactorily, the procedure must be terminated. If tis happens, perform trouble analysis. The following procedure assumes that the FTU is connected, and that a scratch pack is installed on the drive.

OSCILLOSCOPE SETUP

	VOLTS / DIV	TEST POINT	SIGNAL NAME
CH 1 - (USE X 10 PROBE)	0.5 V	A2A08 TPF	+ FINE POSITION ANALOG
CH 2 - (USE X 10 PROBE)	0.5 V	A2B09 15A	+ ON CYLINDER SENSE

	SLOPE / SOURCE	TEST POINT	SIGNAL NAME
TRIGGER A - (USE X 10 PROBE)	+/EXT	A2B09 16B	- COURSE
TRIGGER B - (USE X PROBE)	NOT USED		

TIME / DIV: 10 ms MODE TRIGGER: CHOP

ADDITIONAL SETTINGS: NONE

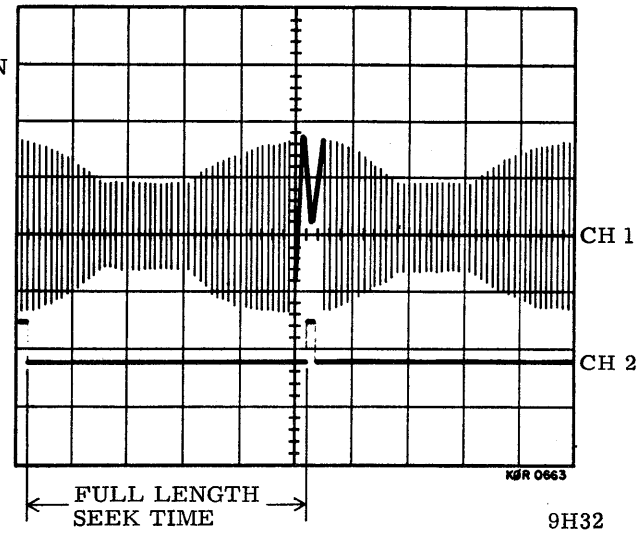

Figure 2-18. 40 MB Coarse Velocity Waveform

OSCILLOSCOPE SETUP

	VOLTS / DIV	TEST POINT	SIGNAL NAME
CH 1 – (USE X 10 PROBE)	0.5 V	A2A08 TPF	+ FINE POSITION ANALOG
CH 2 – (USE X 10 PROBE)	0.5 V	A2B09 15A	+ ON CYLINDER SENSE

	SLOPE / SOURCE	TEST POINT	SIGNAL NAME
TRIGGER A – (USE X 10 PROBE)	+/EXT	A2B09 16B	- COARSE
TRIGGER B – (USE X PROBE)	NOT USED		

TIME / DIV: 0.5 ms MODE TRIGGER: CHOP

ADDITIONAL SETTINGS: NONE

VELOCITY TOO FAST

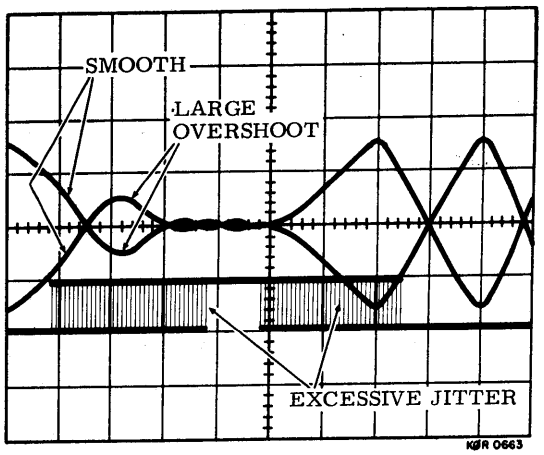

VELOCITY TOO SLOW

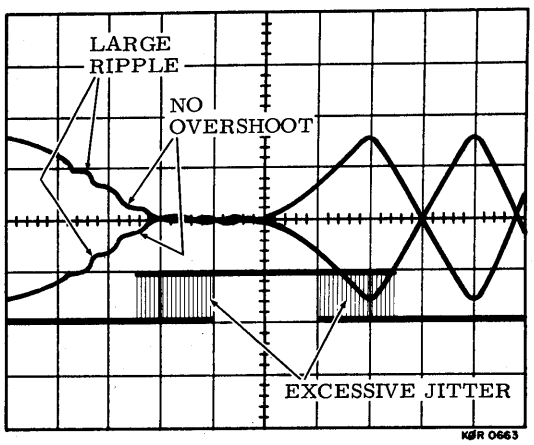

CORRECT VELOCITY

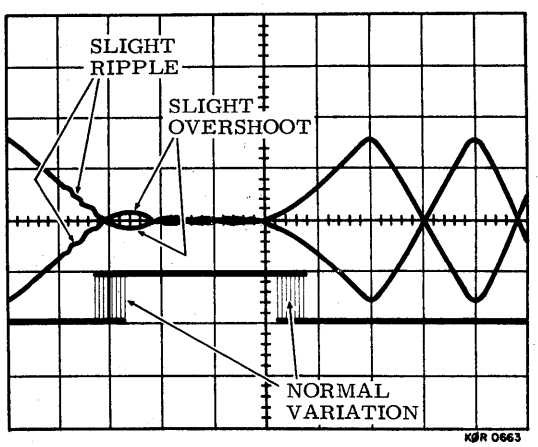

9X23

Figure 2-19. 40 MB Fine Velocity Waveforms

OSCILLOSCOPE SETUP

	VOLTS / DIV	TEST POINT	SIGNAL NAME
CH 1 - (USE X 10 PROBE)	0.2 V	A2B09 03A	+ ON CYLINDER
CH 2 - (USE X PROBE)	NOT USED		

	SLOPE / SOURCE	TEST POINT	SIGNAL NAME
TRIGGER A - (USE X 10 PROBE)	+/EXT	A2B09 07A	- FORWARD SEEK
TRIGGER B - (USE X PROBE)	NOT USED		

TIME / DIV: 10 ms **MODE TRIGGER:** CH 1

ADDITIONAL SETTINGS: NONE

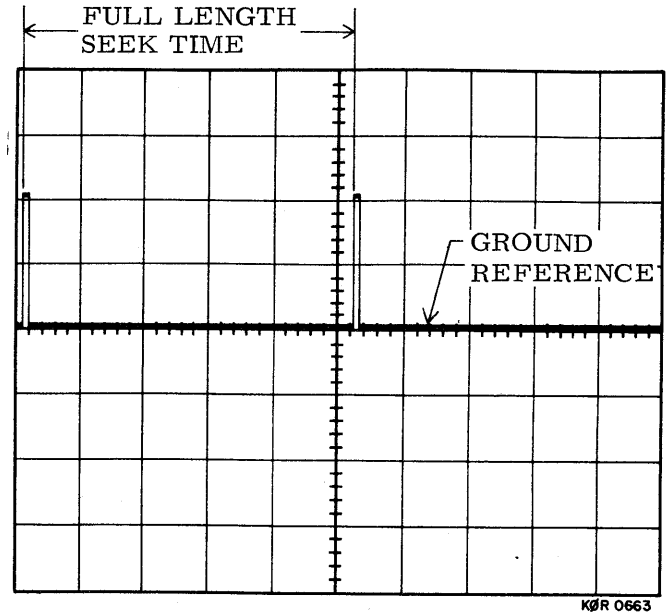

9H34B

Figure 2-20. Procedure B and All 80 MB Velocity Gain Waveform

1. With the drive case closed, command random seeks for 10 minutes minimum in order to thermally stabilize drive.

2. Stop random seeks and set up oscilloscope per figure 2-20. Oscilloscope ground references must be as shown.

3. Command 822 (hex 336) cylinder continuous seeks and adjust oscillowscope trigger level to obtain waveform shown in figure 2-20.

4. Measure full length seek time. Time between On Cylinder pulses hsould be 52 to 54 milliseconds.

5. If full length seek time is not as specified, perform velocity gain adjustment. On card A2A07, adjust velocity gain potentiomenter E2R6 (see figure 2-21) until time between leading edges of On Cylinder pulses is 52 to 54 milliseconds.

6. Return drive to normal operation

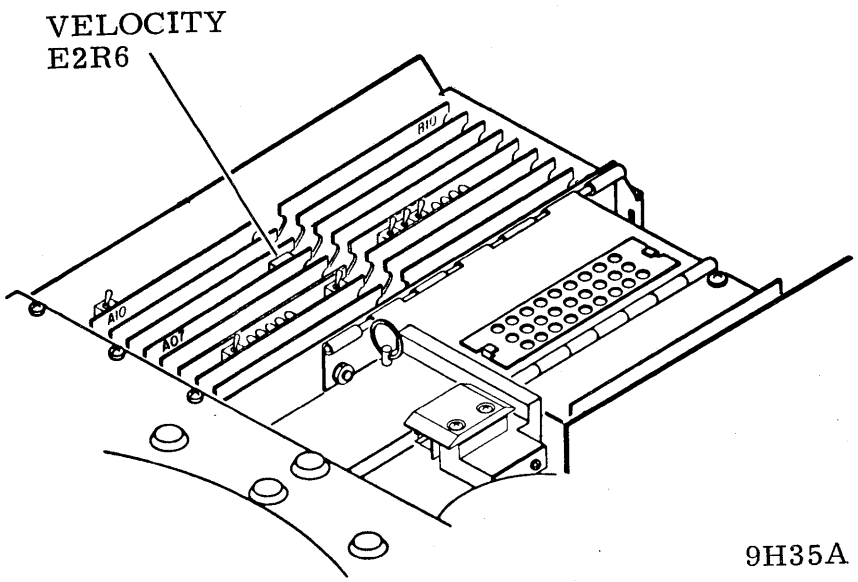

Figure 2-21. 80 MB Velocity Gain Adjustment Location

SECTION 2D

REPAIR AND REPLACEMENT

GENERAL

This section assumes that the particular assembly has previously been identified as malfunctioning. It then provides all necessary procedures pertaining to the adjustment, replacement, and repair of field replaceable parts of the drive. In addition, it identifies what to do when a particular part of the drive cannot be replaced in the field.

Information contained in this section assumes that the reader is thoroughly familiar with the information presented in the General Maintenance Information section of this manual. Also, this section relies heavily on the illustrations contained in the Parts Data section of this manual. These illustrations show the assembly and disassembly relationship of all the parts in the various assemblies. Individual procedures make specific references to the parts data illustrations.

Throughout the section, procedures for the various components or assemblies provide information on adjustment, removal-replacement, and repair in that order. If an adjustment procedure is included, and if there is some doubt as to the need for replacement, the adjustment procedure should be attempted before the final decision to replace the part is made.

Unless otherwise specified, all procedures in this section assume that the drive is powered down and that the customer disk pack is removed. Also, unless otherwise specified, all procedures can be performed with the drive installed in its normal operating position (in line with other drives, or in an equipment rack). Procedures for opening and closing the various cabinet components, and for raising and lowering the deck and logic chassis are included in the General Maintenance section under Access Drive For Maintenance.

CABINET REPAIR

GENERAL

Cabinet repair is limited to the removal and replacement of the various assemblies and their subcomponents, and to the adjustment of those assemblies for proper seating. Information

is presented for all of the various mounting configuratons of the drive. For this reason, ensure that the procedure is applicable to you drive (acoustic, non-acoustic, cabinet mounted, slide rail mounted, etc.).

Information is presented in the following order:

- Case Assemblies
- Drive Seals/Gaskets
- Pack Access Cover Assemblies
- Door Assemblies
- Side Panel Assemblies
- Slide Assemblies

CASE ASSEMBLIES

The case assemblies applicable to the various mounting configurations of the drive are illustrated in figures 3-8 and 3-13.

Adjustment

There are three adjustments applicable to the case assemblies: (1) Alignment to pack access cover (applicable to all mounted configurations), (2) Alignment to 1/4-turn fasteners (applicable only to acoustic top mount drives with these fasteners) and (3) Alignment of slide bolt latch (applicable only to acoustic top mount drives with slide bolt installed on frame).

Alignment To Pack Access Cover - The case assembly must be parallel to, and centered around, the pack access cover. Before making this adjustment, ensure that the pack access cover is properly adjusted. Adjust the case assembly by carefully bending the pivot pin tabs on the base assembly (A1). The case assembly is properly adjusted when the gap between the case and pack access cover (with cover installed and closed) is approximately equal on all sides and the edges are approximately parallel.

Alignment To 1/4-Turn Fasteners - When the case assembly is closed, the case must align with the 1/4-turn fasteners such that the fasteners can engage and secure the case to the frame. Before making this adjustment, ensure that the pack access cover is properly adjusted and that the case is properly aligned to the pack access cover. Adjust the case by loosening all four sets of attaching hardware (see figure 3-3, Sheet 1) which secure the drive electronics assembly to the frame. Move

the drive electronics assembly in relation to the frame, until the case can be secured by the 1/4-turn fasteners. When adjustment is complete and case can be secured, tighten the attaching hardware securing the drive electronics assembly to the frame.

Alignment of Slide-Bolt Latch

The slide-bolt latch and the bracket it is attached to are slotted to permit vertical and lateral positioning. Both adjustments should be made to achieve latching that is reliable with a minimum amount of play.

Removal-Replacement

Although the various cazse assemblies are distinctive, the following procedure (with differences noted) applies to all case assemblies. Replacement is simply performed in the reverse order of removal.

1. Open case assembly from rear and pivot it forward on case pivot pin until it rests on case support arm (or support rod).

2. Remove ground cable by pulling it from quick disconnect terminal.

3. Disengage two halves of case support arm (or disengage support rod from slot in frame) while supporting case.

4. While still supporting case, slide case pivot pins (both sides) towards center of drive to disengage pivot pins from brackets.

5. Lift off case assembly.

Repair

Case assembly repair consists of removing and replacing broken or damaged parts. Section 3 lists all parts of the case assemblies which are field replaceable. There are no special tools required for case repair. The following items require the use of special materials:

- When replacing the support arm on all except the acoustic top case, put a light coat of Loctite grade C on threads of attaching screw.

CAUTION

Spray adhesive may get into drive if sprayed into air in computer room.

- When replacing acoustical foam panels on acoustic case assemblies, use a light coat of sprayable adhesive. First remove paper backing from foam. Then spray the adhesive around all edges of panel appoximately one inch from edge. Also apply adhesive in an "X" pattern across center of panel. Place panel in position on case and press firmly into position.

DRIVE SEALS/GASKETS

Drive seals and gaskets serve as a noise buffer and reduce contamination in the pack area. Drive seals and gaskets are illustrated in figures 3-3, (Sheet 3), 3-9, and 3-24 (sheet 6).

Adjustment

There is no adjustment applicable to the drive seals and gaskets.

Removal-Replacement

Removal and replacement of gaskets is accomplished in accordance with parts data section information. The following procedure covers drive seal removal and replacement.

1. Apply pressure and pull to break adhesive seal.
2. Carefully remove adhesive residue by scraping or by using alcohol based solution.
3. Apply adhesive in track of seal and replace. Ensure seals are properly oriented (rounded side up on shroud, rounded side out on frame, deck, and case).

Repair

No repair is possible for drive seals and gaskets. Damaged parts should be replaced.

PACK ACCESS COVER ASSEMBLIES

The non-acoustic and acoustic pack access cover assemblies are illustrated in figures 3-14 and 3-15 respectively.

Adjustment

Pack access cover adjustment is required if the gasket on the bottom of the cover does not seal on the shroud. Check the sealing by placing a piece of paper on the shroud and closing the cover. If the paper can be easily pulled out, the cover needs adjustment. Check the sealing at a minimum of four points around the shroud.

There are three points of adjustment on the pack access cover: (1) left hinge bracket (2) right hinge bracket (3) cover catch. The hinge brackets provide enough play to allow an up and down adjustment which controls the sealing of the gasket at the rear of the pack access cover. The cover catch also provides up and down adjustment. The cover catch controls the sealing of the gasket at the front of the cover.

In addition to pack access cover sealing adjustment, the cover must also be aligned parallel to and centered between the edges of the case assembly. Center cover on shroud by using pack cover spacers (as required) between bracket and bearing as shown on final assembly figure (3-2 and 3-6). Spacers may go on either side of cover as necessary to center cover. It may be necessary to readjust cover centering in order to complete case assembly centering adjustment.

Removal-Replacement

The following procedure applies to both the non-acoustic and acoustic pack access cover. Cover replacement is simply the reverse order of removal.

1. Open pack access cover and remove ground strap by pulling loose quick disconnect on left side under shroud.

2. Remove retaining ring from pin securing gas spring to pack access cover.

3. While supporting pack access cover, pull out pin securing gas spring to cover.

4. Carefully loosen screws securing rightside hinge bracket. When screws have been loosened sufficiently, disengage hinge bracket and remove pack access cover.

Repair

Pack access cover repair consists of replacing broken and damaged parts. Section 3 lists all field replaceable parts of the covers. There are no special tools or materials required for pack access cover repair.

DOOR ASSEMBLIES

The door assemblies for the various mounting configurations of the drive are illustrated in figures 3-16 and 3-19.

Adjustment

The only adjustment required for the door assemblies is that they be aligned to the rest of the cabinet, and that they not rub on other cabinet members through the arc of their swing. All adjustment is accomplished by positioning the hinge members. Once the door is properly aligned, some adjustment of the keeper latch may be required to ensure proper latching.

Removal-Replacement

Removal and replacement procedures for the door assemblies depend on the style of the cabinet: non-acoustic or acoustic. The following procedures describe door removal; replacement is accomplished in the reverse order or removal.

Non-Acoustic Door - Door removal is accomplished by first opening the door and pulling the ground strap from the quick-disconnect terminal. The door is then removed by removing the lower hinge brcket and disengaging the door from the top hinge.

Acoustic door - Door removal is accomplished by first opening the door and removing the attaching hardware securing the ground strap (and unplugging connector P400 on rear doors). The door is then removed by pulling out the hinge pin in thge lower hinge and ligting the door from the upper hinge.

Repair

Door repair is limited to replacing broken or damaged parts. Section 3 lists all field replaceable parts of the doors. There are no special tools required for door repair. The only special material required is sprayable adhesive. This is used in attaching the acoustical foam panels to acoustic door assemblies. Procedure for using the adhesive is the same as that listed under case assembly repair.

SIDE PANEL ASSEMBLIES

The non-acoustic and acoustic side panels are illustrated in figures 3-20 and 3-21 respectively. All work on the side panels requires that the drive be accessible on all sides.

Adjustment

Side panel adjustment is required only on acoustic cabinets. Adjustment is required in three directions (see figure 2-22). The four brackets on the side panel (A in figure 2-22) control the up-down adjustment for the side panel. The four brackets on the frame (B in figure 2-22) control the front-back and in-out adjustment of the side panel.

Perform the up-down adjustment to cause the top of the side panel to be parallel and flush with the top of the cabinet frame. Perform the front-back adjustment to cause the front edge of the side panel to be parallel to, and approximately 40 mm (1-1/2 in) in front of the front cabinet frame member (see figure 2-22). For this adjustment also ensure that front edge of side panel is flush with the front door when it is installed. Perform the in-out adjustment to cause the acoustic seals on the side panel to be in contact with the cabinet frame. This adjustment should be snug enough to cause a slight squashing of the seals when the side panel is secured in place.

A complete side panel adjustment is performed in the following order:

1. Adjust lower two brackets on side panel until panel meets up-down adjustment requirements.

2. Adjust lower two brackets on frame until panel meets front-back and in-out adjustment requirements. Lower rear bracket on frame governs exact front-back placement, while lower front bracket needs only an approximate placement.

3. Adjust top two brackets on frame so that 1/4-turn fasteners line up with side panel in front-back direction and that side panel meets in-out requirements.

4. Adjust top two brackets on side panel so that they line up with 1/4-turn fasteners.

Removal-Replacement

Removal and replacement procedures for the side panel assemblies depend on the style of the cabinet: non-acoustic or

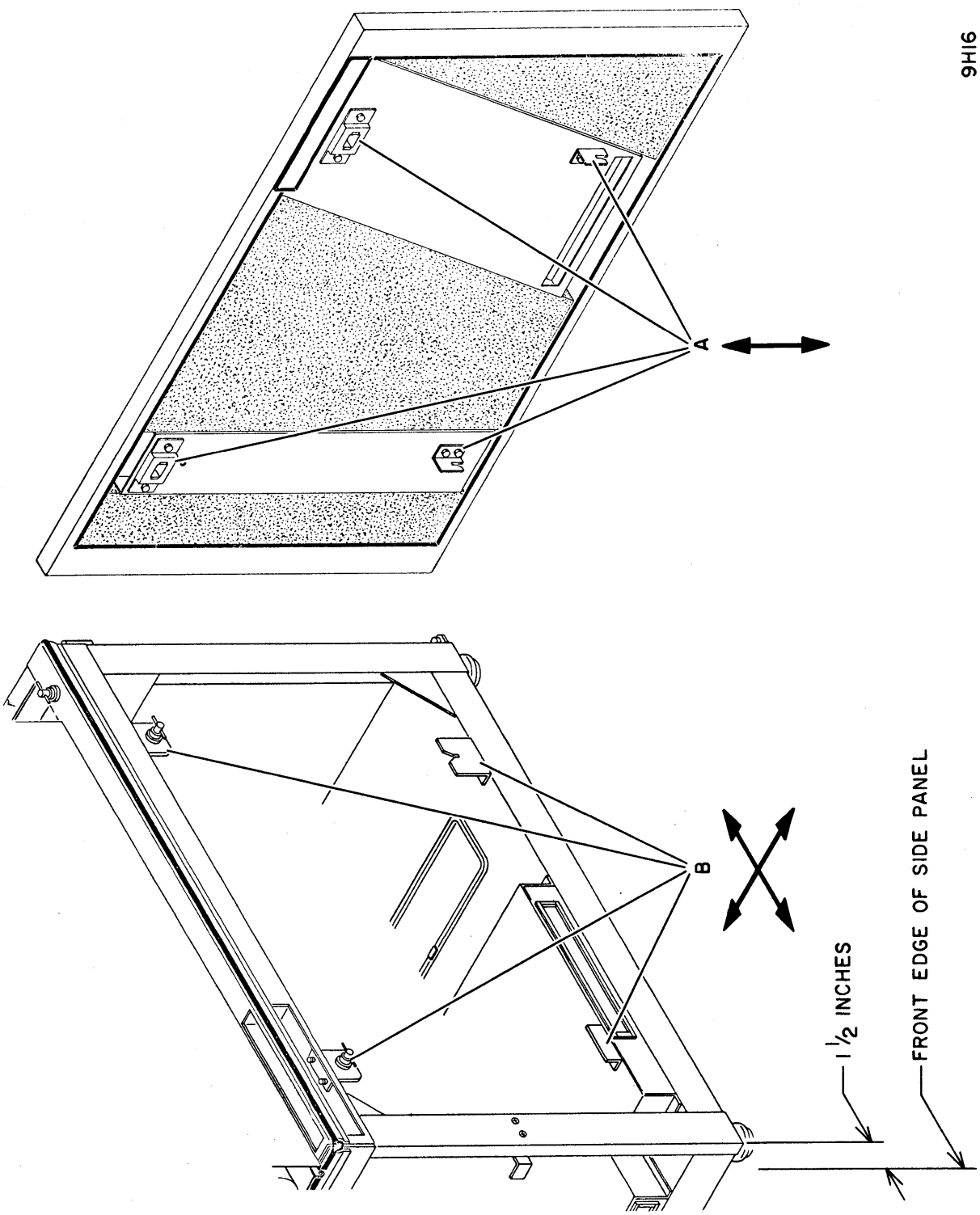

Figure 2-22. Side Panel Adjustment

acoustic. The following procedures describe side panel removal. Replacement is accomplished in the reverse order of removal.

Non-Acoustic Side Panel - Remove side panel as follows:

1. Open front door and remove ground cable(s) from side panel(s) by pulling cable from quick-disconnect.

2. Remove front attaching hardware from side panel(s).

3. Open rear door and remove rear attaching hardware while supporting side panel(s).

4. Lift side panel up to clear side panel brackets.

Acoustic Side Panel - Remove side panel as follows:

1. Open rear door and remove ground cable from side panel(s) by removing screw and lock washer.

2. Release rear 1/4-turn fastener(s).

3. Open front door (or fully extend lower drive on its slides) and release front 1/4-turn fastener(s) while supporting side panel.

4. Lift side panel up to clear side panel brackets.

Repair

Side panel repair it limited to replacing broken or damaged parts. Section 3 lists all field replaceable parts of the side panels. There are no special tools required for side panel repair.

The only special material required is sprayable adhesive. This is used in attaching the acoustical foam panels to acoustic side panels. Procedure for using the adhesive is the same as that listed under case assembly repair.

SLIDE ASSEMBLIES

The slide assembly relationship to the drive and frame is illustrated in figures 3-4 through 3-6. Identification of the various slide parts is shown in figure 2-23.

Adjustment

Adjustment of the slide assemblies is covered in the replacement procedure.

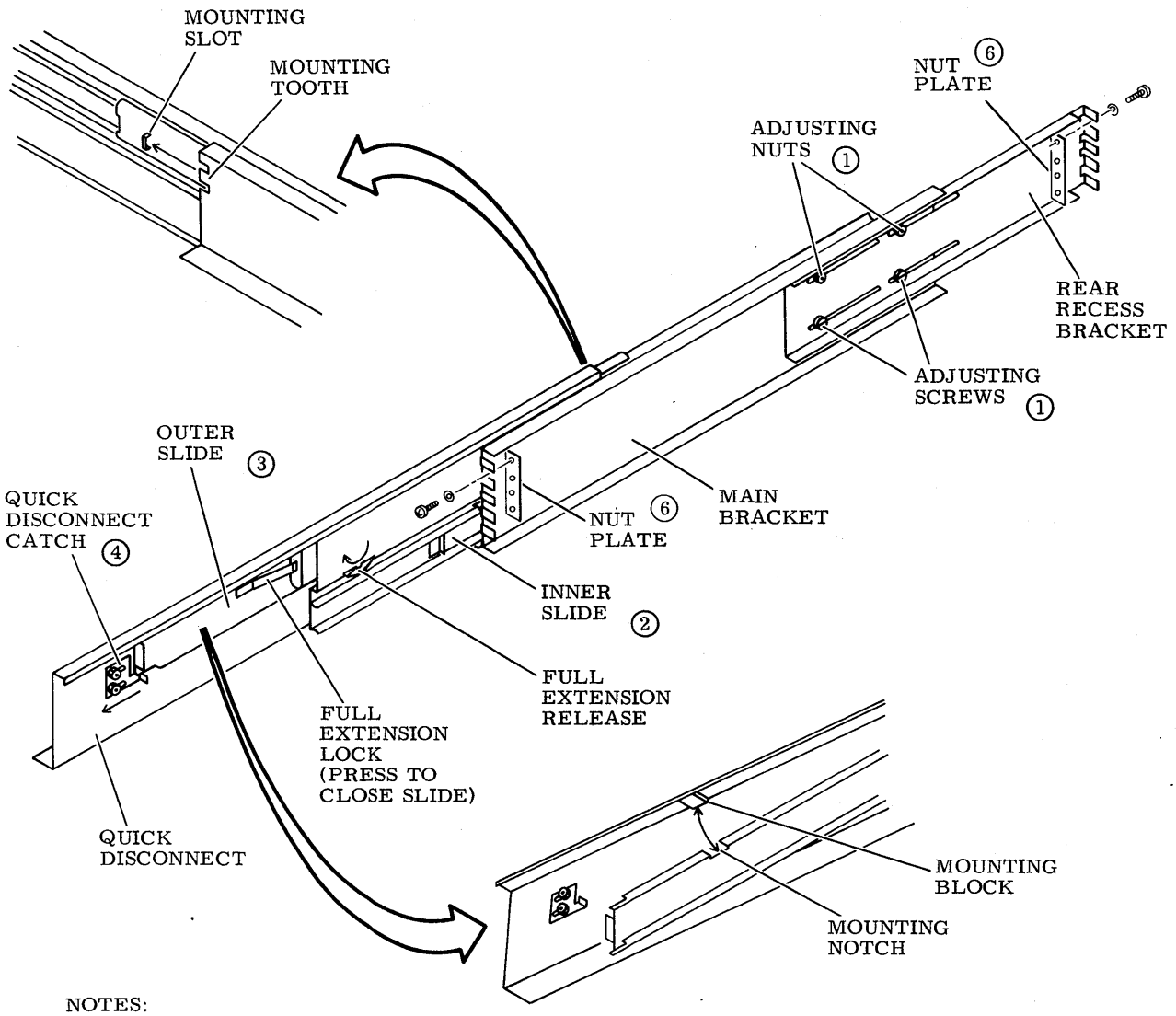

NOTES:

1. ALLOW REAR RECESS BRACKET ADJUSTMENT.
2. LOCKS IN EXTENDED POSITION WHEN OUTER SLIDE IS FULLY EXTENDED.
3. EXTENDED BY PRESSING FULL EXTENSION RELEASE. FULL EXTENSION LOCK SNAPS OUT WHEN THIS SLIDE IS FULLY EXTENDED.
4. LOOSENING NUTS ALLOWS CATCH TO MOVE IN DIRECTION OF ARROW THUS ALLOWING QUICK DISCONNECT TO BE REMOVED.

9XII

5 ASSEMBLY SHOWN IS FOR RIGHT SIDE OF DRIVE.

6. NUT PLATES, WHICH ARE FURNISHED WITH SLIDE, ARE SUPPLIED WITH EITHER HOLES CENTERED IN THE NUT PLATE OR HOLES OFFSET FROM THE CENTER OF THE NUT PLATE. ON NUT PLATES WITH OFFSET HOLES, INSTALL NUT PLATES SO HOLES ARE CLOSE TO THE BRACKETS.

Figure 2-23. Slide Assembly Parts Location

Removal-Replacement

The following procedures (with differences noted) apply to all drive configurations which use slide assemblies.

Removal - Remove slide assembly as follows:

1. Pull drive out to its fully extended position by pressing full extension releases.

2. Disconnect I/O cables, power cable, and system ground.

3. Loosen nuts securing quick-disconnect catches and slide catches toward front of drive.

CAUTION

Two people are required to lift drive off slide assemblies.

4. Carefully lift drive (with quick disconnects attached to drives base assembly) from slide assemblies and set on a solid support.

5. Remove quick disconnects from drives base assembly by removing attaching screws and washers.

6. Push slide assemblies to fully closed position by pressing in full extension releases and pushing in slide assemblies.

7. Loosen mounting hardware securing slide assemblies to frame.

8. Disengage slide assemblies from frame by pulling slotted ends of slides out from between nut plate and frame.

Replacement - Install slide assemblies as follows:

1. Loosen adjusting screws and adjusting nuts on slide assemblies such that rear recess bracket can slide back and forth.

2. Push slide assemblies into fully closed position.

3. Loosely attach screws, lock washers, and nut plates to frame. Leave hardware loose enough so that slotted ends of slide assembly can be inserted between nut plate and frame.

4. Adjust position of rear recess bracket such that slide assemblies can be positioned in frame. Position slide

assemblies in frame with quick disconnect flanges at bottom and facing one another.

5. Tighten mounting hardware securing slide assemblies to frame. Tighten adjusting screws and adjusting nuts securing rear recess bracket to main bracket.

6. Ensure that slide assemblies are aligned both horizontally and vertically by pressing full extension releases.

7. Pull both slide assemblies to their fully extended position by pressing full extension releases.

8. Separate quick disconnects from slide assemblies by loosening nuts securing quick disconnect catch and sliding catch forward.

9. Remove rubber mounting pads from bottom of drive (some units may not have mounting pads).

NOTE

For ease of assembly and to prevent damage to case assembly, remove case before installing drive on slide assemblies.

10. Using four countersunk flat-head screws and countersunk washers on each side, attach quick disconnects to drives base assembly.

CAUTION

Before mounting drive ensure that all slide assembly mounting hardware is secure. Use two people to lift drive on to slides. When installing drawer mounted drive, use care not to exert undue downward pressure or frame may tip forward.

11. Carefully lift drive over fully extended slide assemblies. Engage mounting tooth on quick disconnects with mounting slot on outer slide. Ensure that mounting block is properly seated in mounting notch.

12. Slide quick disconnect catch into position uner outer slide and tighten nuts.

13. Press in to release full extension locks and then slide drive in and out several times to ensure that it slides

freely and that binding does not occur. If binding occurs, slide assemblies are not properly aligned.

14. Connect I/O cables, power cable, and system ground.

15. When slide installation is complete, install side panels (drawer mounted drives only) and then install case assembly.

Repair

No repair of the slide assemblies is possible at the field level. If a slide assembly is damaged, the entire assembly must be replaced.

ELECTRONIC PACKAGE REPAIR

GENERAL

Electronic package repair is limited to the removal and replacement of the various assemblies and parts of the drive, and to the adjustment of those components. The illustrations in section 3 show all the field replaceable parts of the drive and their interrelationship to one another. Most parts of the drive can be replaced simply by studying the parts list illustrations. However, there are some procedures which are not obvious or which require the use of special tools or materials. These procedures are arranged in alpha-numeric order according to their physical location codes. The mechanical assemblies, which do not have physical location codes (drive belt), are located next to a part with which they logically associate (drive motor). The following procedures are included in the order stated:

- 42 Volt Supply/Emergency Retract Assembly (A1A01) (3 Card Power Supply)
- Power Supply Assembly (A1A01) (2 Card Power Supply)
- 12 And 20 Volt Supply (A1A02) (3 Card Power Supply)
- 5 Volt Supply (A1A03) (3 Card Power Supply)
- Blower Motor (A1BM1)
- Run Triac (A1K1)
- Deck Interlock Switch (A1S4)
- Logic Chassis (A2)

- Control Panel Assembly (A3A01)
- Power Amplifier Assembly (A3A04)
- Track Servo Preamplifier (A3A05)
- Drive Belt
- Drive Motor and Brake Assemblies (A3DM1, A3HB1)
- Spindle Assembly
- Static Ground Spring
- Speed Transducer (A3L1)
- Velocity Transducer (A3L2)
- Pack Cover Solenoid (A3L3)
- Rail Bracket Assembly
- Carriage and Coil Assembly
- Heads Loaded Switch (A3S2)
- Flex Lead Assembly
- Magnet Assembly
- Head Arm Assemblies
- Cable Assemblies (W1 through W4, W6, W11, W12)

42 VOLT SUPPLY/EMERGENCY RETRACT ASSEMBLY (A1A01) (3 CARD POWER SUPPLY)

The plus and minus 42 volt power supply, emergency retract assembly is illustrated in figure 3-35.

Adjustment

There are no adjustments applicable to the 42 volt power supply. If the output does not meet specification, repair or replace the card.

Removal-Replacement

There are no special procedures for removing the card. Simply remove the power supply cover and lift the card straight out of the power supply chassis.

Repair

Repair of the 42 volt power supply card consist of removing and replacing the electrical components in accordance with the parts data information. In replacing resistors R1 and R2, use RTV adhesive sealant, or a suitable substitute, to cement the resistor body to the board blank.

POWER SUPPLY ASSEMBLY (A1A01) (2 CARD POWER SUPPLY)

The plus and minus 42, 20, and 12 volt power supply is illustrated in figure 3-39.

Adjustment

There are no adjustments applicable to the 42, 20, and 12 volt power supply. The outputs should be 42 ±2 V, 20 ±2 V, and 12 ±2 V. If any voltages are out of tolerance, replace the card.

Removal-Replacement

1. Remove protective cover assembly.
2. Unplug connectors from J1, J2, and J3.
3. Remove four screws securing the power supply assembly to the base.
4. Lift the power supply assembly out of the drive

Repair

Repair of the power supply card consists of removing and replacing the electrical components in accordance with the parts data information. When replacing the large capacitors be sure to secure them with a tie wrap. Use dielectric grease between the base of the transistor and the heat sink.

12 & 20 VOLT SUPPLY (A1A02) (3 CARD POWER SUPPLY)

The plus and minus 12 volt and plus and minus 20 volt power supply is illustrated in figure 3-36.

Adjustment

There are no adjustments applicable to the 12 and 20 volt power supply. If the output does not meet specification, repair or replace the card.

Removal-Replacement

There are no special procedures for removing the card. Simply remove the power supply cover and lift the card straight out of the power supply chassis.

Repair

Repair of the 12 and 20 volt power supply consists of removing and replacing the electircal components in accordance with the parts data information. In replacing voltage regulator diodes VR1 and VR2, apply a thin coat of dielectric grease between the base of the diode and the heatsink.

5 VOLT SUPPLY (A1A03) (3 CARD POWER SUPPLY)

The plus and minus 5 volt power supply is illustrated in figure 3-37.

Adjustment

Adjustment of the 5 volt power supply is covered in Section 2C, Test and Adjustment.

Removal-Replacement

There are no special procedures for removing the card. Simply remove the power supply cover and lift the card straight out of the power supply chassis.

Repair

Repair of the 5 volt power supply consists of removing and replacing the electrical components in accordance with the parts data information. In replacing resistor R20, use RTV adhesive sealant (or a suitable substitute) to cement the resistor body to the board blank. In replacing transistors Q4, Q9, and Q10, apply a thin coat of dielectric grease between the base of the transistor and the heatsink.

BLOWER MOTOR ASSEMBLY (A1BM1)

The blower motor is illustrated in figures 3-32, and 3-33 (sheet 2).

Adjustment

There is no adjustment applicable to the blower motor.

Removal-Replacement

Removal and replacement of the blower motor assembly is accomplished in accordance with the information in the parts data section. Before removing the blower motor, first remove the absolute filter and the logic chassis air plenum. If the square shoulder grommets between the base and the blower motor are removed or need to be replaced, ensure that the wide shoulder on the grommet is installed toward the blower. The foam tape gasket between the blower and the logic chassis air plenum is not part of the blower motor assembly. Refer to Repair for the replacement of the gasket.

Repair

Repair of the blower motor assembly is limited to the replacement of connectors, pins, quick connect terminals, insulating pods, and the foam gasket next to the logic chassis air plenum. Refer to the paragraph on cable assembly removal-replacement and repair for information concerning the electrical terminals.

Gasket replacement requires approximately 305 to 330 mm (12 to 13 in) of foam tape. Proceed as follows:

NOTE

Use care not to damage gasket when installing logic chassis air plenum.

1. Cut two lengths of foam tape, each 140 mm (5-1/2 in) long.

2. Place logic chassis air plenum on base next to blower motor and align holddown holes. Mark position of each end of plenum on blower motor with a pencil.

3. Remove backing from one 140 mm (5-1/2 in) length of tape to expose adhesive. Position edge of tape against base (to seal space under blower) and center around two

marks made on blower motor. Press tape firmly into position against blower and base.

4. Remove backing from second length of foam tape to expose adhesive. Position tape above upper edge of cutout in blower, edge of tape must be even with edge of cutout. Align ends of tape with first piece of tape and press into place on blower.

5. Cut two lengths of foam tape to length required to fill space between two lengths of tape already installed. Remove backing from tape and position with outer edges of tape even with ends of installed tape. Press into position.

RUN TRIAC (A1K1)

The run triac is illustrated in figures 3-32 and 3-33 (sheet 1).

Adjustment

There is no adjustment applicable to the run triac.

Removal-Replacement

Removal and replacement of the run triac is performed in accordance with the information in the parts data section. When replacing the run triac, apply a light coat of dielectric grease to the base of the triac.

Repair

No repair of the run triac is possible. If the triac fails it must be replaced.

DECK INTERLOCK SWITCH (A1S4)

The deck interlock switch is illustrated in figures 3-32 and 3-33 (Sheet 1).

Adjustment

Adjustment of the deck interlock switch is not a critical adjustment. Should it be necessary to adjust the deck interlock switch, use the adjusting screw in the end of the plunger to increase or decrease the travel of the plunger.

Removal-Replacement

1. Remove power from the unit.

2. Remove the case assembly (top cover), raise the deck, and install a deck support bracket. (Refer to figure 2-4.)

NOTE

A 6 in long hex driver is recommended for easier removal of the front and rear deck mounting screws.

3. Remove the two front deck hold down screws located in the shroud area.

4. Remove the two wires from the deck interlock switch, located directly behind the transformer.

5. Remove the deck support bracket and return the deck to its original condition.

6. Unplug the velocity transducer and remove its mounting bracket, located at the rear of the magnet. This is necessary to allow removal of the two rear deck mounting screws.

7. Remove the velocity transducer cable clamp and lay the cable aside.

8. Remove the two rear deck mounting screws. The rear deck hold down screw and spacer should be in the keeper hole. All screws are located directly above the running time meter.

9. Unplug connector P200 from power amp card and remove the tie wrap closest to this connector to allow more harness movement.

WARNING

Use care when reaching under the raised deck to avoid any accidents.

10. Raise the rear of the deck about 100 mm (4 in). Lift the hinged, shock-mount bracket containing the interlock switch away from the magnet until it stops. Slowly lower the rear deck assembly until it rests on the mounting bracket.

11. Remove the two mounting screws from the underside of the interlock switch, and remove the switch.

Repair

No repair of the deck interlock switch is possible.

LOGIC CHASSIS ASSEMBLY (A2)

The logic chassis assembly is illustrated in figure 3-24.

Adjustment

There is no adjustment applicable to the logic chassis assembly.

Removal-Replacement

The following procedure covers removal of the entire logic chassis from the drive and removal of the wirewrap assembly from the logic chassis. However, the most common repair of the logic chassis is the changing of pins on the wirewrap panel. For these procedures it is not necessary to remove the entire logic chassis assembly. Replacement of the logic chassis is performed in reverse order of removal.

1. Disconnect I/O cables in accordance with procedure listed under Standard Test Conditions.

2. Remove I/O card(s) from location D1 (and D2).

3. If terminators are installed, remove them from locations C1 (and C2).

4. Remove all cards from logic chassis.

5. Raise logic chassis to maintenance position and remove all connectors, power and ground leads, and logic chassis cover from back of wirewrap panel (refer to figure 3-22, sheet 2).

6. To remove logic chassis:

   a. S/C 16 and below - With logic chassis in maintenance position, press in on flat spring and slide logic chassis off hinge.

   b. S/C 17 and above - Lower logic chassis to operating position and remove hardware securing logic chassis hinge to magnet. Lift chassis up and out of base.

7. Remove parts of logic chassis as necessary, in accordance with illustration in parts data section.

8. If it is necessary to remove wirewrap assembly from logic chassis proceed as follows:

   a. Use a pliers to open crimp on end of each guide rail. When all crimps have been opened and each guide rail member is sufficiently straight, guide rails can be pulled out of wirewrap assemby.

   b. Remove hardware securing wirewrap assembly to logic chassis and remove wirewrap assembly. When replacing apply Loctite, grade C, to first few threads of studs on logic chassis.

Repair

Logic chassis repair is limited to the removal and replacement of broken or damaged parts in accordance with the parts data section, and to the repair of wires and replacement of wirewrap panels pins. The following procedures provide information on wirewrap replacement and pin straightening/replacement.

Wirewrap Replacement - This procedure describes removal and replacement of backpanel wirewrap connections.

1. Using end of wirewrap tool with notch opposing direction of wires wrap, slide tool over pin and carefully turn tool to unwrap wire.

CAUTION

Do not attempt to rewrap a previously wrapped wire. Cut off old wrap and restrip wire, or replace with new wire.

2. If wire is being replaced, cut new wire to proper length and strip approximately 30 mm (1-1/8 in) of insulation from each end of wire.

3. Insert one end of wire into wirewrap tool until insulation rests against stop.

4. Slide tool over backpanel pin, leaving a small gap between bottom of post or lower wrap level and new wire.

5. Hold wire securely (allow small amount of slack to assure one turn of insulation) and twist tool to wrap wire around pin. As tool is twisted, wire wrapping around pin forces tool up and off wire.

6. When wire is completely wrapped, remove tool and inspect connection. Each connection must have one turn of insulation and six to seven turns of bare wire around pin.

Pin Straightening/Replacement - Wirewrap panel pin straightening is accomplished using the pin straightener listed in maintenance tools and materials. This procedure describes removing a damaged pin from the wirewrap panel and replacing it with a new one.

1. Remove card from logic chassis position associated with pin removal.

NOTE

Remove wires from pin, noting levels from which removed. When reinstalling wires, follow procedures in wirewrap replacement paragraph.

2. Remove all wires from subject pin.

3. Slide I/O pin removal tool over pin from wirewrap side of panel and apply pressure toward panel and apply pressure toward panel until bond breaks and pin starts to slide out.

4. Grasp shank of pin (with long nose pliers or similar tool) from card side of panel and pull it out. If collar (see figure 2-21.) comes out with pin, proceed to step 5. If collar remains secure in panel, proceed to step 6.

5. Coat collar of replacement pin (not hole) with fast cure epoxy and insert pin and collar into panel from wirewrap side. Proceed to step 7.

6. Insert replacement pin (with collar removed) into panel from wirewrap side until it is same length as adjacent pins.

CAUTION

Any epoxy on shaft of pin will prevent an electrical connection.

7. Carefully apply a fast cure epoxy (obtain commercially) around pin on wirewrap side of panel.

8. Following epoxy cure, reconnect wires and replace logic card in card slot.

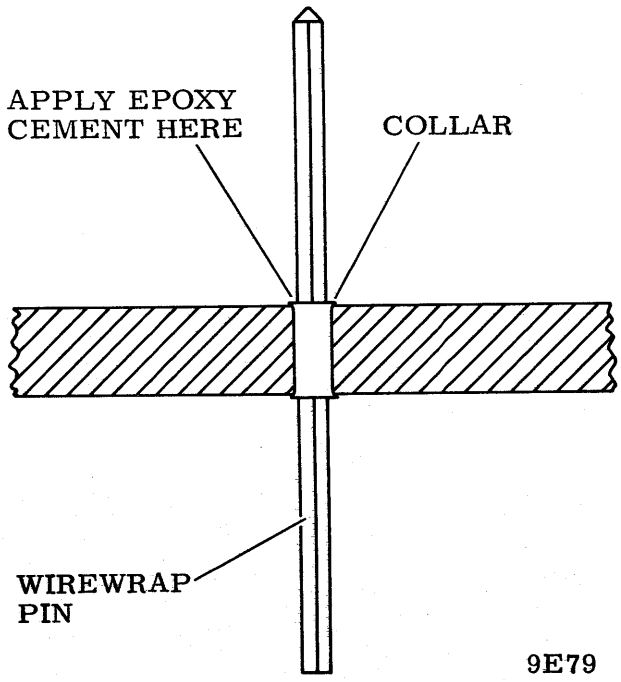

Figure 2-24. Wirewrap Pin Replacement

CONTROL PANEL ASSEMBLY (A3A01)

The control panel assembly is illustrated in figures 3-22 and 3-23.

Adjustment

There is no adjustment applicable to the control panel assembly.

Removal-Replacement

Remove the control panel from the shroud by reaching behind the shroud and carefully pressing on the back of the panel. Lift the panel out the front of the shroud and disconnect connector P201. Replacement is performed in reverse order.

Repair

Repair of the control panel is limited to the removal and replacement of broken or damaged parts in accordance with the parts data information. When replacing any of the switches or lens diffused LEDs, ensure that they are properly aligned to clear the bezel before they are soldered in place. It is especially important that the switches not bind on the bezel after assembly.

POWER AMPLIFIER ASSEMBLY (A3A04)

The power amplifier is illustrated in figure 3-25, sheet 1 and in figure 3-31.

Adjustment

There is no adjustment applicable to the power amplifier assembly.

Removal-Replacement

The following procedure removes the power amplifier from the drive. Replacement is performed in reverse order.

1. Remove quick connect terminal (yellow leadwire) from faston on upper left hand corner of assembly.

2. Loosen attaching hardware securing upper left hand corner such that assembly can later be removed.

3. Raise deck to maintenance position.

4. Remove connector J200. It may be necessary to use a tool to pry apart two halves of connector.

5. Remove two sets of attaching hardware securing assembly to deck casting. It may be necessary to raise deck higher in order to gain adequate access to attaching hardware.

6. Carefully lift assembly from behind attaching hardware loosened in step 2.

Repair

Repair of the power amplifier assembly consists of removing and replacing broken or damaged parts in accordance with the parts data section. When replacing any of the resistors on the board, use RTV adhesive sealant, or a suitable substitute, to cement the resistor body to the board blank. When replacing transistors Q1 through Q4, apply a thin coat of dielectric grease between the base of the transistor and the heat sink. Transistor Q5 uses the insulating wafer and does not need the dielectric grease.

TRACK SERVO PREAMPLIFIER (A3A05)

The track servo preamplifier assembly is illustrated in figure 3-25, sheet 1.

Adjustment

There is no adjustment applicable to the servo preamplifier assembly.

Removal-Replacement

The following procedure covers removal of the servo preamplifier assembly from the mounting plate and leaves the mounting plate secured to the deck. Replacement is performed in the reverse order of removal.

1. Raise deck to maintenance position.

2. Reach behind servo preamplifier from under deck and disconnect connector J8. It may be necessary to cut and remove cable tie strap.

3. Loosen attaching hardware on upper left hand corner of assembly. Carefully slide servo preamplifier shield from behind attaching hardware and leave it hanging on servo head cable.

4. Remove attaching hardware securing servo preamplifier housing to mounting plate. It may be necessary to remove deck support bracket and move deck up or down in order to have clear access to attching hardware. Especially on cabinet mounted drives, it is easier to have one person manipulate deck into position and have a second person remove attaching hardware.

5. Unplug servo head connector from servo preamplifier board. Carefully remove preamplifier housing (containing board) from between deck and power supply. It may be easier to remove preamplifier housing if deck is lowered to normal operating position.

6. Remove attaching hardware securing servo amplifier board to housing.

Repair

There is no repair of the servo preamplifier possible at the field level. If the board is malfunctioning it must be replaced.

DRIVE BELT

The drive belt and associated adjusting hardware are shown in figure 3-25, sheet 5.

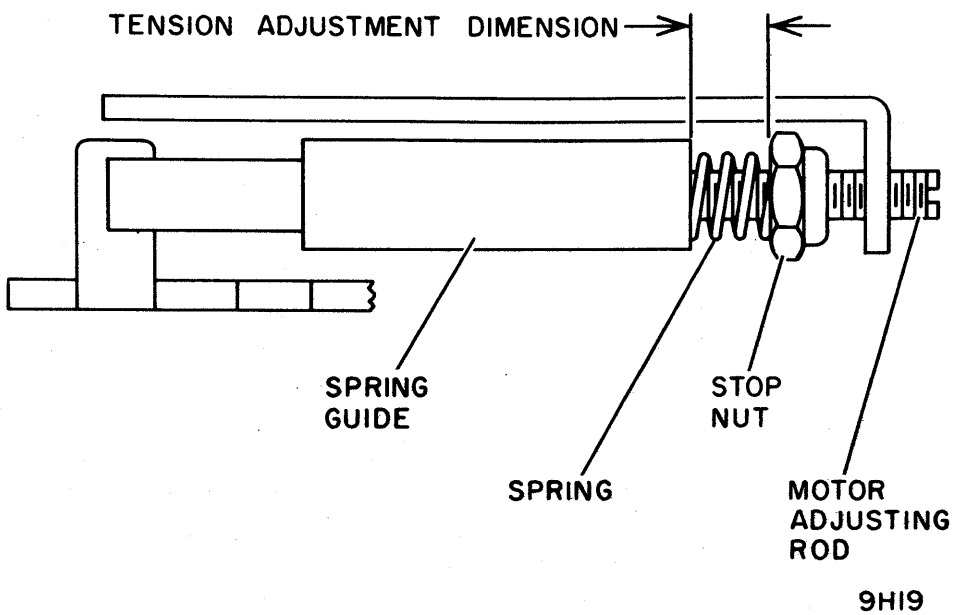

Figure 2-25. Drive Belt Adjustment

Adjustment

The drive belt adjustment may be performed any time there is suspicion that the belt may be slipping or as required by other procedures in this manual. Before performing the adjustment, check the belt for any signs of damage: fraying, cracking, or checking of belt surface. If any of these signs exist, replace the belt before performing adjustment.

1. Raise deck to maintenance position.

2. Referring to figure 2-25, measure distance between spring guide and stop nut. Distance must be as follows:

   - Between 8.9 and 11.4 mm (0.35 to 0.45 in) for 50 Hz drives.

   - Between 5.1 and 7.6 mm (0.20 to 0.30 in) for 60 Hz drives.

3. If dimension is not correct, turn motor adjusting rod until it meets specification.

4. Open pack access cover and rotate spindle while checking drive belt tracking. Belt must run true on both motor pulley and spindle pulley. Belt not tracking properly indicates pulley misalignment.

5. When belt is tracking properly, close pack access cover and return deck to normal operating position.

Apply power to drive and press START switch to start drive motor. Again watch drive belt and see that it is tracking properly.

Removal-Replacement

The following procedure covers both the removal and replacement of the drive belt and applies to all drives.

1. Raise deck to maintenance position.

CAUTION

Failure to relieve pressure on compression spring may cause the motor shaft to be bent.

2. Turn motor adjusting rod out until pressure on compression spring is fully relieved.

3. Remove drive belt from motor by rolling belt off motor pulley while rotating pulley. Disengage belt from spindle pulley and slip it out from around brake.

4. To install drive belt, slip belt up over brake and then engage other end of belt in groove on spindle pulley. Apply tension to belt and guide it on to motor pulley while manually rotating drive belt and drive motor pulley.

5. Manually rotate drive motor pulley several times to make certain that drive belt is tracking properly.

6. Perform Adjustment procedure.

Repair

There is not repair of the belt possible.

DRIVE MOTOR AND BRAKE ASSEMBLIES (A3DM1, A3HB1)

The drive motor and brake assemblies are illustrated in figure 3-30.

Adjustment

There are two adjustments pertaining to the drive motor and brake assemblies 1) drive belt adjustment 2) brake adjustment. The drive belt adjustment procedure is provided in the Drive Belt paragraph. The brake adjustment is performed during the replacement and is provided in the Removal-Replacement paragraph under brake replacement.

Removal-Replacement

The brake assembly may be removed and replaced separately, or the drive motor and brake assemblies may be removed and replaced as a unit. When removing the drive motor, the brake must also be removed. Removal and replacement of either the brake or drive motor and brake is self evident when using the illustration in the parts data section. Before beginning any work on the drive motor and brake assemblies, perform the drive belt removal procedure. The following information presents details of the reassembly procedures which are not obvious. Be thoroughly familiar with this information before attempting replacement.

Brake Replacement - The following procedure is to be used when ever a brake is installed on the drive motor shaft.

CAUTION

In order to prevent damage to drive motor shaft, brake replacement must be performed in the order specified.

1. Loosely install brake mounting bracket on motor mounting plate (see figure 3-30).

2. Install brake shaft collar (with ridge of collar facing away from drive motor) and then brake on drive motor shaft.

3. Slide brake on motor shaft so that collar slides on split shaft of brake armature and so that stud on brake strikes end of slot in brake mounting bracket. Tighten nut securing brake to brake mounting bracket.

CAUTION

In following step, be certain that brake is centered around drive motor shaft. If brake is miscentered it could cause damage to, or breaking of, drive motor shaft.

4. Support brake to maintain centering on motor shaft while tightening screw securing brake mounting bracket to motor mounting plate.

5. While holding motor pulley to prevent shaft from turning, rotate hysteresis brake armature several turns to eliminate any binding between drive motor shaft and brake armature.

NOTE

To minimize motor and brake vibration, ensure that the socket head screw in the brake shaft collar is positioned opposite the set screw in the pulley shaft collar.

6. With brake shaft collar resting on brake, tighten hex head socket screw in collar as follows:

   - On newer units (use a 9/64-in hex wrench) tighten screw to a torque between 3.2 and 3.6 N·M (28 and 32 Lbf·in).

   - On older units (use a 7/64-in hex wrench) tighten screw to a torque between 2.1 and 2.5 N·M (18 and 22 Lbf·in).

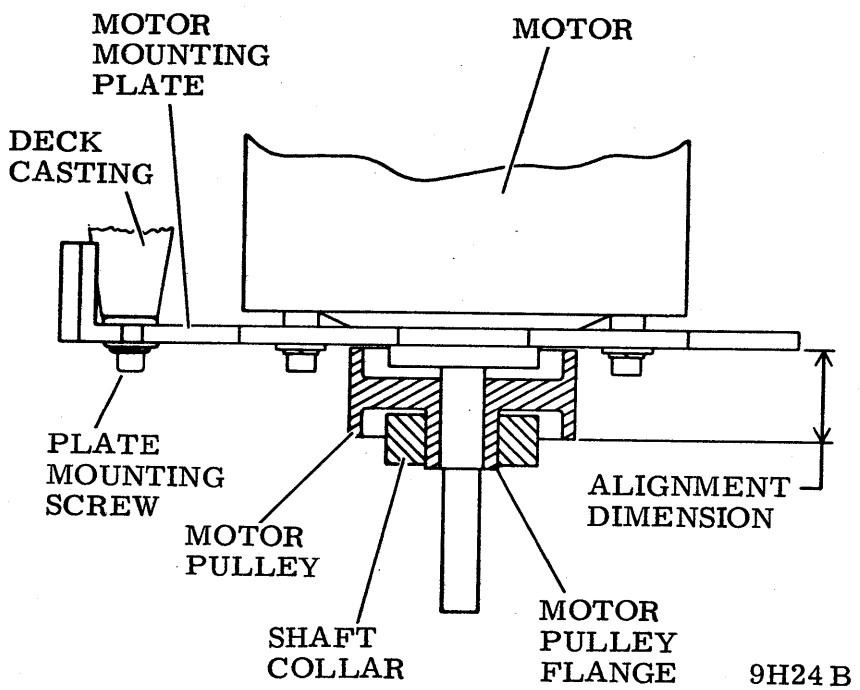

Figure 2-26. Drive Motor Pulley Adjustment

NOTE

Replacement brakes are supplied with extension cabling (required on older units.) If extension cable is not required, discard it.

7. Connect brake leadwires.

8. Replace cable ties, being certain that all wires are secured so they will not be rubbed by drive belt.

Drive Motor Replacement - Observe the following when reassembling the drive motor assembly:

NOTE

If it is necessary to replace drive motor assembly because of an electrical failure of the motor, also replace capacitor A3C6. It is likely that this capacitor is associated with failure.

1. Tighten plate mounting screws to a torque between 0.9 and 1.3 N·M (8 and 12 Lbf·in).

2. With motor mounted on motor mounting plate, position pulley on drive motor shaft so that alignment dimension shown in figure 2-23 is 20.7 ±0.8 mm (13/16 ±1/32 in).

3. Ensure that motor pulley flange protrudes slightly through shaft collar.

4. Tighten set screw in shaft collar to a torque between 6.8 and 7.9 N·M (60 and 70 Lbf·in).

Repair

Repair of the drive motor and brake assemblies is limited to removing and replacing broken or damaged parts in accordance with information in the parts data section.

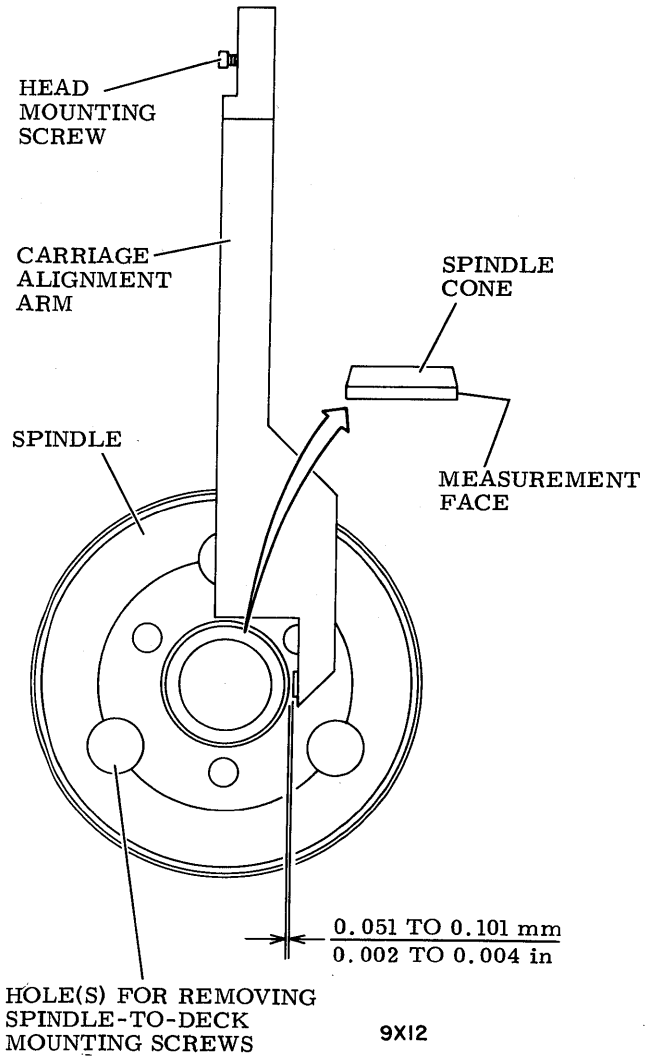

Figure 2-27. Spindle/Carriage Alignment

SPINDLE ASSEMBLY

The spindle assembly is illustrated in figure 3-26.

Adjustment

Spindle adjustment must be performed any time the attaching hardware securing the spindle to the deck has been loosened.

1. Remove head arm assembly number 3 (second from bottom).

2. Install carriage alignment arm in slot on carriage just vacated by head arm assembly number 3. Secure alignment arm to carriage and tighten attaching hardware until torque is between0.40 and 0.51 N·M (3.5 and 4.5 Lbf·in).

3. Extend carriage until alignment arm is aligned as shown in figure 2-24.

4. Using non-metallic feeler gauge, check that distance between alignment arm and spindle is as specified in figure 2-24. If adjustment is required, go to step 5. If specification is met go to step 11.

5. Retract carriage and rotate spindle until holes in top of spindle align with mounting hardware.

6. Remove screws and washers securing spindle to deck. Install screws (without washers) and just snug screws tight.

7. Extend carriage until alignment arm is positioned as shown in figure 2-24.

8. Using a plastic faced hammer, gently tap spindle until dimension between alignment arm and spindle is as specified in figure 2-24.

9. Tighten one screw at a time and check dimension after tightening each screw.

10. When last screw is tightened in step 9, remove first screw tightened and install washer on it. Then reinstall screw, tighten it, and recheck dimensional requirement. Repeat this procedure for the second and third screws.

11. Remove alignment arm and install head arm assembly in slot number 3 in carriage.

12. Perform static ground spring adjustment and head arm alignment procedures.

Removal-Replacement

The following procedure covers removing and replacing the entire spindle assembly. It is not necessary to remove the spindle to perform lockshaft replacement. Refer to Repair for information concerning lockshaft replacement.

CAUTION

When spindle assembly is removed from drive or shipping container do not allow it to rest on pulley end of assembly. When it must set down, lay it on its side or on spindle face plate. Improper handling of spindle assembly may cause damage to spindle bearings which could result in premature failure of spindle or even damage to disks and heads.

1. Raise deck to maintenance position.

2. Referring to figure 3-25, sheet 6, remove attaching hardware securing ground cable to static ground spring block.

3. Remove drive belt and set it aside.

4. Lower drive belt and set it aside.

5. Rotate spindle until holes in top of spindle align with mounting hardware.

6. Remove attaching hardware securing spindle assembly to deck.

7. Lift spindle assembly from deck, being careful to avoid damage to static ground spring.

8. Remove attaching hardware securing static ground spring mounting block to spindle assembly. Remove static ground spring assembly and install it on replacement spindle assembly.

9. Carefully lower replacement spindle assembly through deck opening in shroud. Orient spindle assembly so that ground spring mounting block faces drive motor.

10. Secure spindle assembly to deck using screws only. Lock washers are installed during Adjustment procedure.

11. Raise deck to maintenance position.

12. Install ground cable to static ground spring mounting block and install drive belt.

13. Perform Drive Belt Adjustment procedure and then the Spindle Assembly Adjustment procedure. Following spindle assembly adjustment, check speed sensor adjustment.

Repair

Repair of the spindle assembly is limited to removal and replacement of the lockshaft and associated hardware as indicated in the parts data section. The following procedure covers removal and replacement of the lockshaft.

1. Raise deck to maintenance position.

2. Referring to figure 3-25, sheet 6, remove attaching hardware securing ground cable to static ground spring block.

3. Remove static ground spring from mounting block.

4. Remove shaft end seal by prying down with a pair of opposing screw drivers.

5. Reaching in from bottom of spindle, remove shoulder screw and associated washers and spring. Spindle may be locked in position during shoulder screw removal, by pressing down on end of brake plate.

6. Lift lockshaft out from top of spindle.

7. Install replacement lockshaft, sliding it in from top of spindle. If smaller compression spring came out with old lockshaft, assemble it on new lockshaft before assembly.

8. Assemble two washers and compression spring on shoulder screw as shown in figure 3-25. Apply a thin coat of Loctite primer, grade T, to last four threads of shoulder screw, being careful not to get any primer on spring or washers.

9. Allow Loctite primer to air dry for approximately 5 minutes.

10. When Loctite primer is dry apply a thin coat of Loctite, grade C, to last four threads of shoulder screw. Parts must be assembled within three minutes of Loctite application.

11. Assemble shoulder screw and hardware into bottom of lockshaft. Tighten shoulder screw to a torque between 4.0 and 5.0 N·M (35 and 45 Lbf·in)

12. Press shaft end seal into position on bottom of spindle assembly. Lower deck to normal operating position and allow Loctite to air dry for approximately three hours.

13. Following Loctite cure, raise deck to maintenance position and assemble static ground spring and associated ground cable.

14. Perform Clean and Lubricate Lockshaft procedure (see preventive maintenance).

15. Perform Static Ground Spring Adjustment procedure.

STATIC GROUND SPRING

The static ground spring (located on the bottom of the spindle assembly) is illustrated in figure 3-25, sheet 6.

Adjustment

The ground spring adjustment procedure must be performed any time the screws securing the spring or mounting block have been loosened, or as required by other procedures in this manual.

1. Raise deck to maintenance position.

2. Connect push-pull gauge to outer end of ground spring.

3. Using a force in-line with lockshaft, pull down on push-pull gauge. Force required to pull ground spring free of spindle end seal must be 90 ±25 grams.

4. If force is within specification, go to step 7. If force is not within specification, loosen attaching hardware securing ground spring mounting block to side of spindle assembly.

5. Adjust spring tension by sliding mounting block toward deck (to increase tension) or away from deck (to decrease tension) and retightening attaching hardware.

6. Repeat force measurement and adjustment steps until specifications are met. If specifications cannot be met, replace ground spring.

7. Remove attaching hardware securing ground cable to ground spring mounting block and disconnect ground cable.

8. Connect multimeter (set to RX1) between ground cable and ground spring. Meter should indicate zero ohms. If specification is met go to step 10, if it is not met, go to step 9.

9. Clean bottom of shaft end seal (on bottom of spindle) using a piece of gauze slightly dampened with media cleaning solution. Repeat step 8. If specification is not met, replace ground spring.

10. Disconnect multimeter and connect ground cable to ground spring mounting block.

11. Lower deck to normal operating position.

Removal-Replacement

There are no special procedures for the removal and replacement of the static ground spring. Perform the removal-replacement in accordance with the information in the parts data section.

Repair

No repair of the static ground spring is possible. If any of the parts fail, they must be replaced.

SPEED TRANSDUCER (A3L1)

The speed transducer assembly is illustrated in figure 3-25, sheet 4.

Adjustment

Speed transducer adjustment is required whenever the relative position of the spindle and the speed transducer has been changed, or as required by other procedures in this manual.

1. Inside the pack area, place Go-NoGo Tool across top of spindle face plate so that gauge extends out over top of speed transducer.

2. Check dimension from top of speed transducer to top of spindle face plate (see figure 2-25). Dimension should be as specified in figure. If adjustment is required, proceed to step 6. If no adjustment is required, verify correct output of speed transducer by performing steps 3, 4, and 5.

3. Install scratch pad.

4. With drive powered up and heads loaded, connect oscilloscope to back panel pin A10-27A (Speed Transducer Output). Sync negative internal. Calibrate scope trace to ground.

5. Observe waveform on oscilloscope. Signal should reach at least -1 to +4.5 vdc on positive swing. If oscilloscope reading is within tolerance, terminate procedure. If oscilloscope is not within tolerance; power down drive, remove pack, and proceed to step 6.

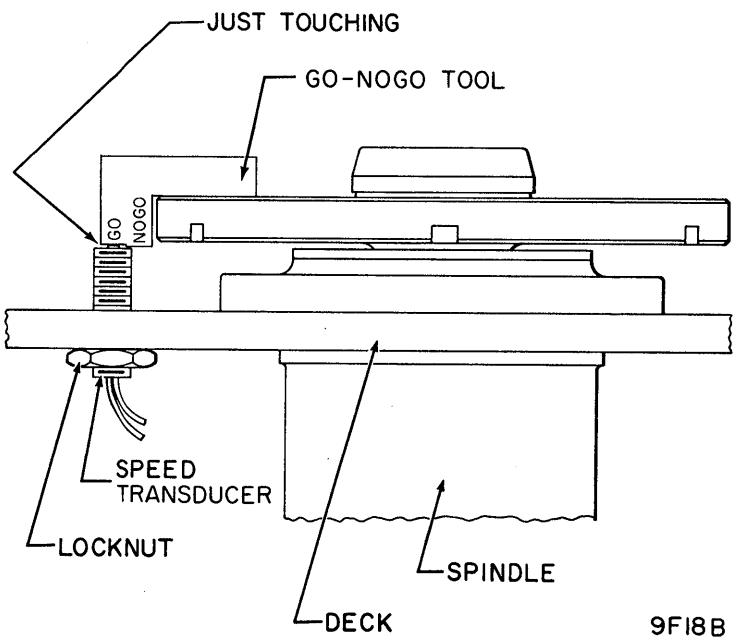

Figure 2-28. Speed Transducer Adjustment

6. Raise deck to maintenance position.

7. Loosen locknut on bottom of speed transducer. Disconnect connector J202 so that leads are free to turn during adjustment.

8. Rotate speed transducer until top of transducer makes contact with the GO surface of the Go-NoGo Tool. Tighten locknut until torque is between 0.45 and 0.67 N·M (4 and 6 Lbf·in). Recheck dimension with Go-NoGo Tool.

9. When dimension is correct and locknut is tightened, install connector J202.

10. Lower deck to normal operating position and verify correct output of speed transducer (steps 3, 4, and 5).

11. If oscilloscope reading is not within tolerance, replace transducer (see Removal-Replacement procedure).

Removal-Replacement

There are no special procedures for the removal or replacement of the speed transducer. The speed transducer is removed and replaced from the bottom side of the deck assembly. When replacement is completed, perform the adjustment procedure.

Repair

Repair of the speed transducer is limited to the replacement of the connector and pins in accordance with the parts data section. Refer to Cable Assembly repair procedures for information on connector and pin replacement.

VELOCITY TRANSDUCER (A3L2)

The velocity transducer is illustrated in figure 3-29 and shown in parts data illustration 3-17.

Adjustment

Velocity transducer adjustment is covered in the removal and replacement procedure.

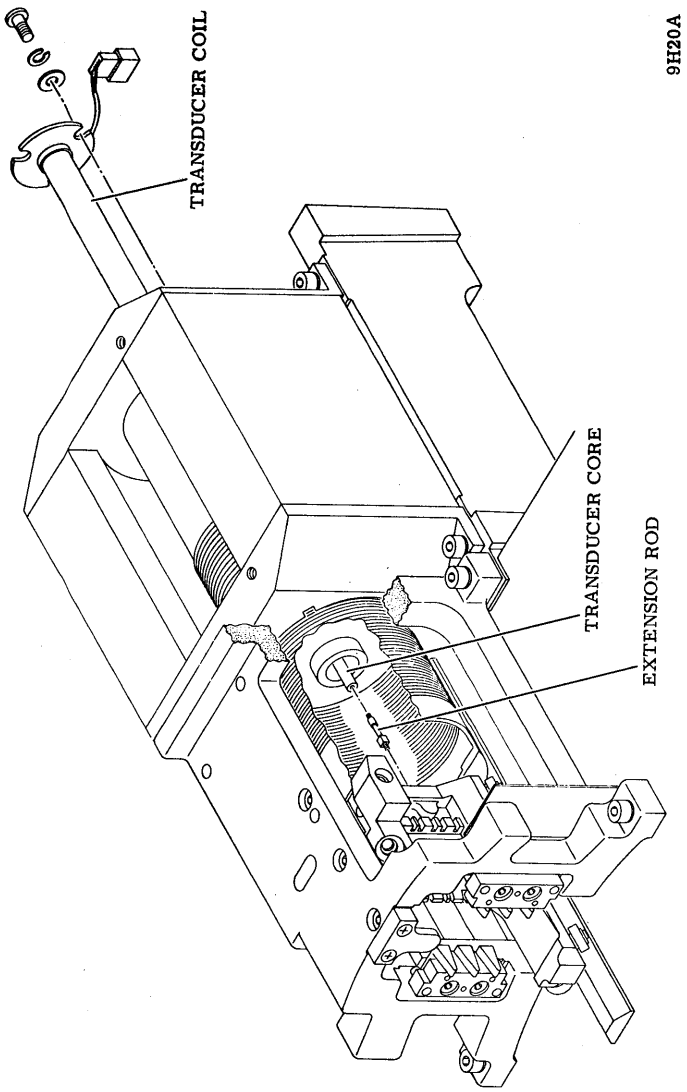

Figure 2-29. Velocity Transducer Replacement

Removal-Replacement

The velocity transducer assembly consists of a transducer coil (complete with housing and connector), a transducer core, and an extension rod. Whenever it is necessary to change any part of the transducer assembly, all parts of the assembly must be changed.

NOTE

When ordering the velocity transducer assembly, be certain to also order the extension rod.

The following procedure first covers replacement of the transducer coil, aligning it to the old transducer core. It then covers replacement of the core.

1. Remove attaching hardware, securing transducer coil to rear of magnet assembly. Unplug connector P22.

2. Carefully remove transducer coil, sliding it straight out rear of magnet assembly.

3. Slowly and carefully slide replacement transducer coil into rear of magnet assembly.

4. Align one of the three slots on back of transducer coil with mounting hole in magnet. Manually extend heads and slide carriage back and forth. Be aware of any drag or of any rubbing sound. Rotate coil and move carriage again for each of remaining two slots on back of transducer coil.

5. Select mounting slot which produced minimum drag and minimum rubbing. Orient this slot to mounting hole and install and tighten attaching hardware.

6. Connect connector P22. Extend heads and move carriage back and forth to verify alignment of transducer coil.

7. Reach in from logic chassis side of drive and disconnect extension rod from rear of carriage assembly using a 1/8-inch open end wrench.

8. Push extension rod and transducer core through coil and out rear of magnet assembly.

9. Apply light coat or Loctite grade C to threads of new extension rod and screw rod into end of replacement transducer core. Wipe off excessive Loctite.

NOTE

Do not apply Loctite to remaining end of extension rod until completing next step.

10. Slowly and carefully slide replacement transducer core and extension rod through coil from rear.

CAUTION

Use extreme care not to allow Loctite to get on carriage rails or bearings.

11. Very carefully apply a light coat of Loctite grade C to threads on end of extension rod. Thread extension rod into rear of carriage and lightly tighten. Wipe away excessive Loctite.

12. Manually extend heads and move carriage back and forth to verify that carriage moves freely and there is no excessive drag.

Repair

Repair of the velocity transducer assembly is limited to removing and replacing the connector and pins in accordance with the parts data section. Refer to Cable Assembly repair procedures for information on connector and pin replacement.

PACK COVER SOLENOID (A3L3)

The pack cover solenoid (optional) is illustrated in figure 3-25, sheet 2.

Adjustment - S/C 16 & Below

The pack cover solenoid adjustment is required whenver the solenoid is changes or if the pack cover does not lock when power is removed from the drive. There are two adjustments pertaining to the olenoid: 1) clearance, 2) spring tension.

The clearance adjustment is made to obtain minimum clearance adjustment is made to obtain minimum clearance between the interlock latch (see figure 2-30) and the interlock keeper on the pack access cover. When the pack access cover is latched (solenoid deenergized, and latch in up position) the keeper must strike the latch and not allow the pack cover catch to be released. Loosen the attaching hardware securing the solenoid assembly to the shroud, and slide the assembly backwards or forwards to achieve this adjustment.

The spring tension adjustment is made to fully extend the solenoid plunger when the solenoid is deengergized. The tension should not be so great as to prevent the plunger from fully retracting when the solenoid is energized. Perform the adjustment by loosening the spring mounting hardware and sliding it up or down in the mounting slot.

Adjustment S/C 17 & Above

The pack cover solenoid adjustment is required whenever the solenoid is changed or if the pack cover does not lock when power is removed from the drive. There are two adjustments pertaining to the solenoid: (1) horizontal, (2) vertical.

1. Adjust horizontal position of the interlock using adjustment slots to obtain a gap of 0.635 to 1.397 mm (0.025 to 0.055 in) between the interlock latch and pack cover latch. Refer to figure 2-30.

2. Adjust vertical position of solenoid using the adjustment slots to obtain clearance between interlock latch and the pack cover latch when the plunger of the solenoid is bottomed. The travel of the plunger cannot be so great as to prevent retracting the plunger when the solenoid is energized.

Removal-Replacement

There are no special procedures for removal and replacement of the pack cover solenoid. Perform the removal and replacement in accordance with the information in the parts data section.

Repair

No repair of the pack cover solenoid is possible. If any part fails, it must be replaced.

RAIL BRACKET ASSEMBLY

The rail bracket assembly is illustrated in figure 3-27.

Adjustment

The rail bracket assembly is not adjustable in the field. Refer to Removal-Replacement for additional information.

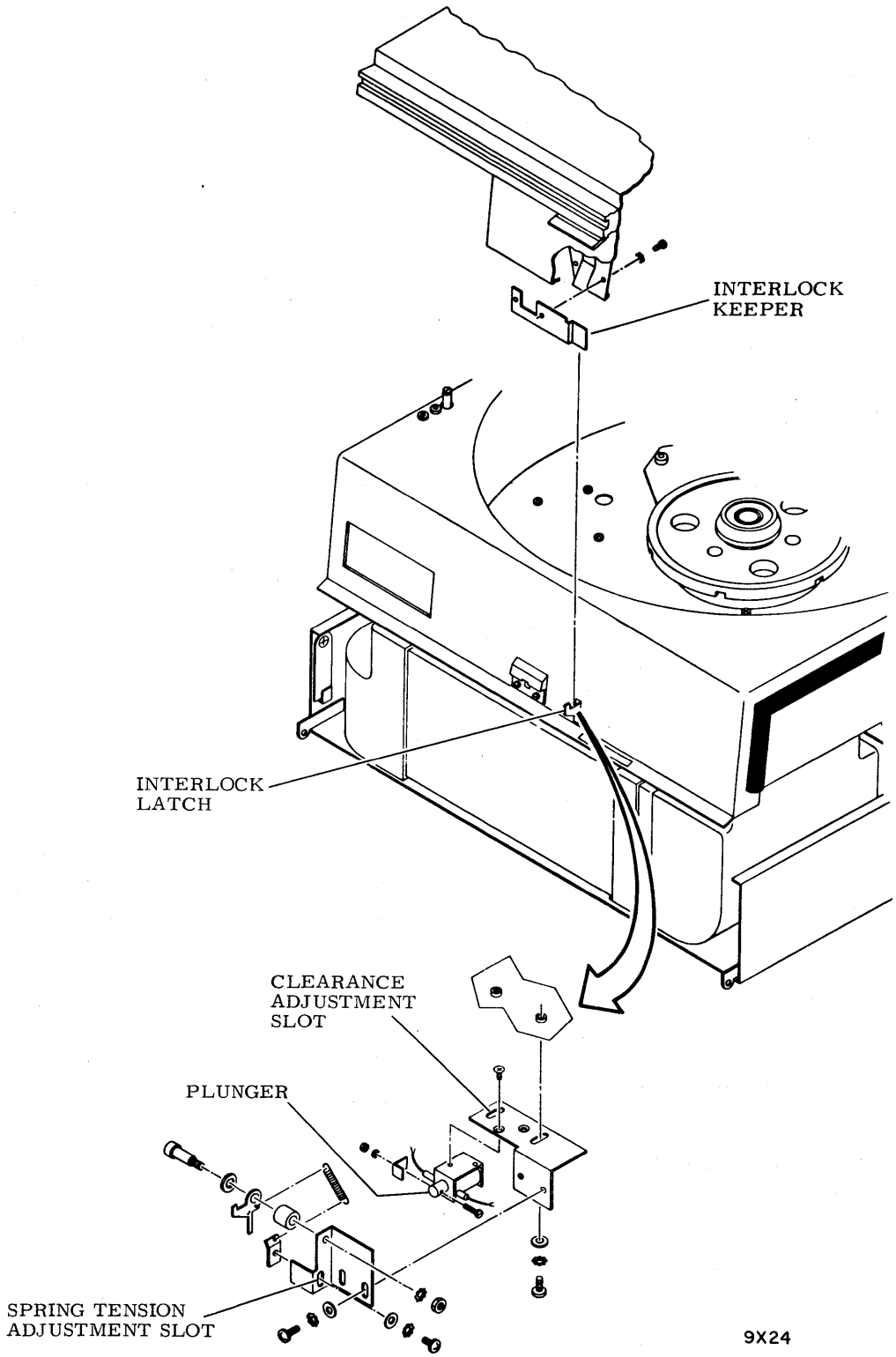

Figure 2-30. Pack Cover Solenoid Adjustment (Sheet 1 of 2)
S/C 16 & Below

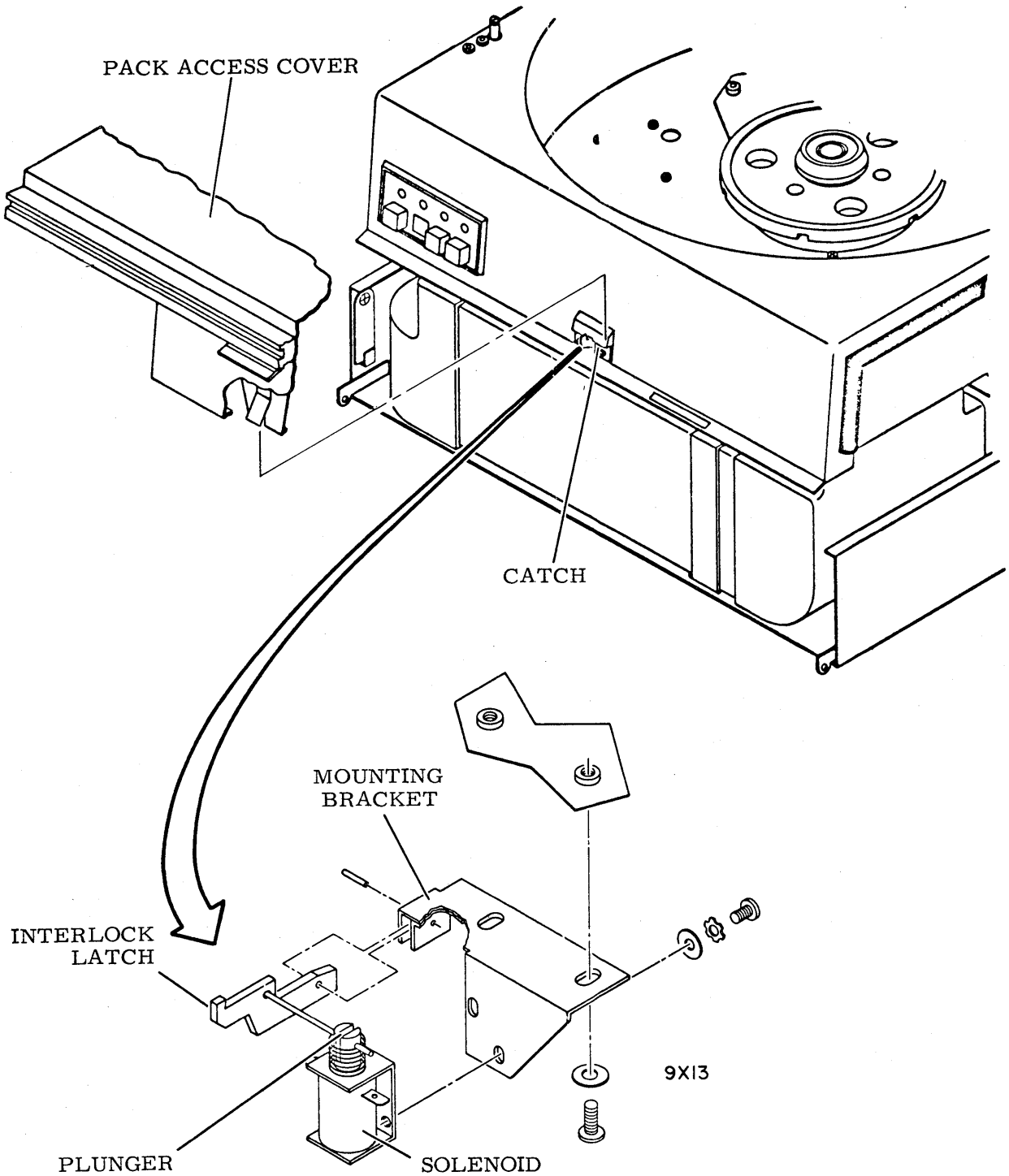

Figure 2-30. Pack Solenoid Adjustment (Sheet 2)
S/C 17 and Above

Removal-Replacement

Because of the precision alignment, and the special tools and training required to accomplish the alignment, it is not possible to perform adjustment or replacement of the rails or the rail bracket assembly in the field. Under no circumstances should the screws securing the rails or the rail bracket to the deck be loosened. If either the rails or the rail bracket assembly are damaged or misaligned, contact the factory maintenance representative for service.

Repair

Repair of the rail bracket assembly is limited to the replacement of those items mounted on the bracket, as specified in the parts data section. In addition to the following information, refer to the Heads Loaded Switch and the Flex Lead Assembly procedures.

When replacing the cam towers, tighten attaching screws to torque between 0.57 and 0.79 N·M (5 and 7 Lbf·in). When replacing the upper stop block, the rubber stop bumper must also be replaced. Attach the stop bumper to the stop block using a small amount of rubber silicone sealant.

CARRIAGE AND COIL ASSEMBLY

The carriage and coil assembly is illustrated in figure 3-28. Because of the precision alignment of the carriage bearings, and the special tools and training required to accomplish the alignment, the carriage and coil assembly cannot be replaced in the field. If either the carriage or coil is damaged or misaligned, call the factory maintenance representative for service.

The flex lead assembly, also illustrated in figure 3-28, can be replaced in the field.

Refer to that procedure for service information.

HEADS LOADED SWITCH (A3S2)

The heads loaded switch is illustrated in figure 3-27.

Adjustment

Perform the heads loaded switch adjustment under any of the following conditions:

- Heads do not fully retract when drive is powered down
- Unknown cause of a power amplifier or power amplifier fuse failure
- Heads loaded switch is changed or in any way moved
- Instructed to do so by another procedure

1. Disconnect leadwires from heads loaded switch, taking note of leadwire placement.

2. Connect multimeter (set to RX1 scale) between ground contact and normally open contact as shown in figure 2-28. With carriage fully retracted, multimeter should indicate zero ohms.

NOTE

Measure carriage travel between rear edge of voice coil and inside back edge of magnet assembly.

3. Note measurement from rear of voice coil to inside back edge of magnet assembly with carriage retracted. Manually extend head very slowly, while observing multimeter. Measure carriage travel at point that multimeter switches from zero ohms to infinity. Difference between fully retracted measurement and heads extended measurement should be from 2.29 to 4.06 mm (0.090 to 0.160 in).

4. If switch does not transfer within specified measurement, loosen hardware securing switch mounting bracket to rail bracket assembly and adjust switch position.

5. When adjustment is complete recheck carriage travel per step 3. Assuming adjustment is correct, reconnect leadwires to heads loaded switch.

Removal-Replacement

No special procedures are required for replacement of the heads loaded switch.

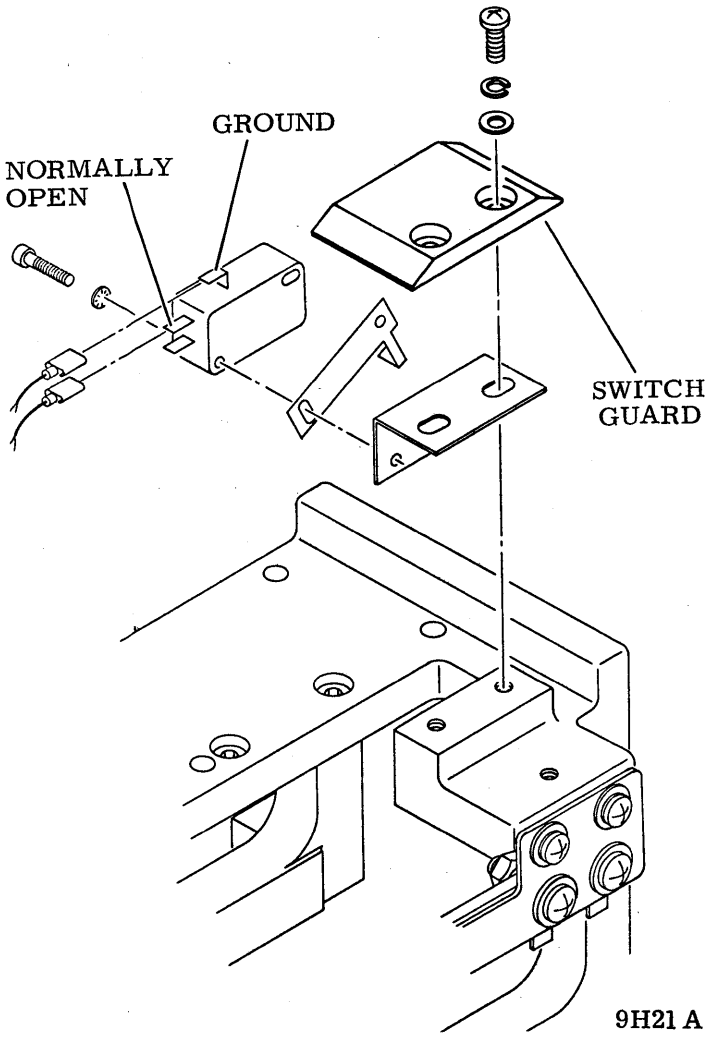

Figure 2-31. Heads Loaded Switch Replacement

Repair

No repair of the heads loaded switch is possible. If the switch fails, it must be replaced.

FLEX LEAD ASSEMBLY

The flex lead assembly is shown in relation to the carriage and coil assembly in figure 3-28.

Adjustment

Adjust the flex lead assembly any time the assembly is changed, or any time work is done in the area which could cause the flex lead assembly to become misaligned.

Adjustment of the flex lead assembly is a matter of positioning the assembly so that it is parallel with the travel of the carriage and coil. When the flex lead assembly is properly aligned, there is no buckling of the leads during extension and retraction of the carriage and coil assembly. Likewise, there is a parallel motion with the carriage, without evidence of the leads either riding up or down.

Removal-Replacement

There are no special procedures for the removal and replacement of the flex lead assembly. Perform the removal and replacement in accordance with the information in the parts data section.

Repair

No repair of the flex lead assembly is possible. If any of the parts are damaged or frail, the assembly must be replaced.

MAGNET ASSEMBLY

The magnet assembly and associated hardware is shown in figure 3-29.

Adjustment

The magnet assembly must be adjusted any time the mounting hardware securing the magnet to the deck is loosened.

The magnet assembly is properly adjusted when the coil slides through its complete travel without contacting the magnet assembly. Ensure that when the magnet assembly is secured to the deck, a 0.005 inch non-metallic feeler gauge passes between the coil and the magnet. The 0.005 inch clearance must be maintained at all points around the coil in the front opening of the magnet assembly. After securing the magnet to the deck, and before installing the velocity transducer, manually extend the heads and move the carriage and coil assembly back and forth through its full travel. There should be no rubbing or scraping sound and there should be no drag felt during this movement.

Removal-Replacement

There are no special procedures for the removal and replacement of the magnet assembly. Perform the removal and replacement in accordance with the information in the parts data section.

Repair

Repair of the magnet assembly is limited to the removal and replacement of the velocity transducer assembly. Refer to that procedure for service information.

HEAD ARM ASSEMBLIES

The head arm assemblies are shown in figure 3-25, sheet 1. In addition, the various parts involved in the removal and replacement of the head arms are identified in figures 2-29 and

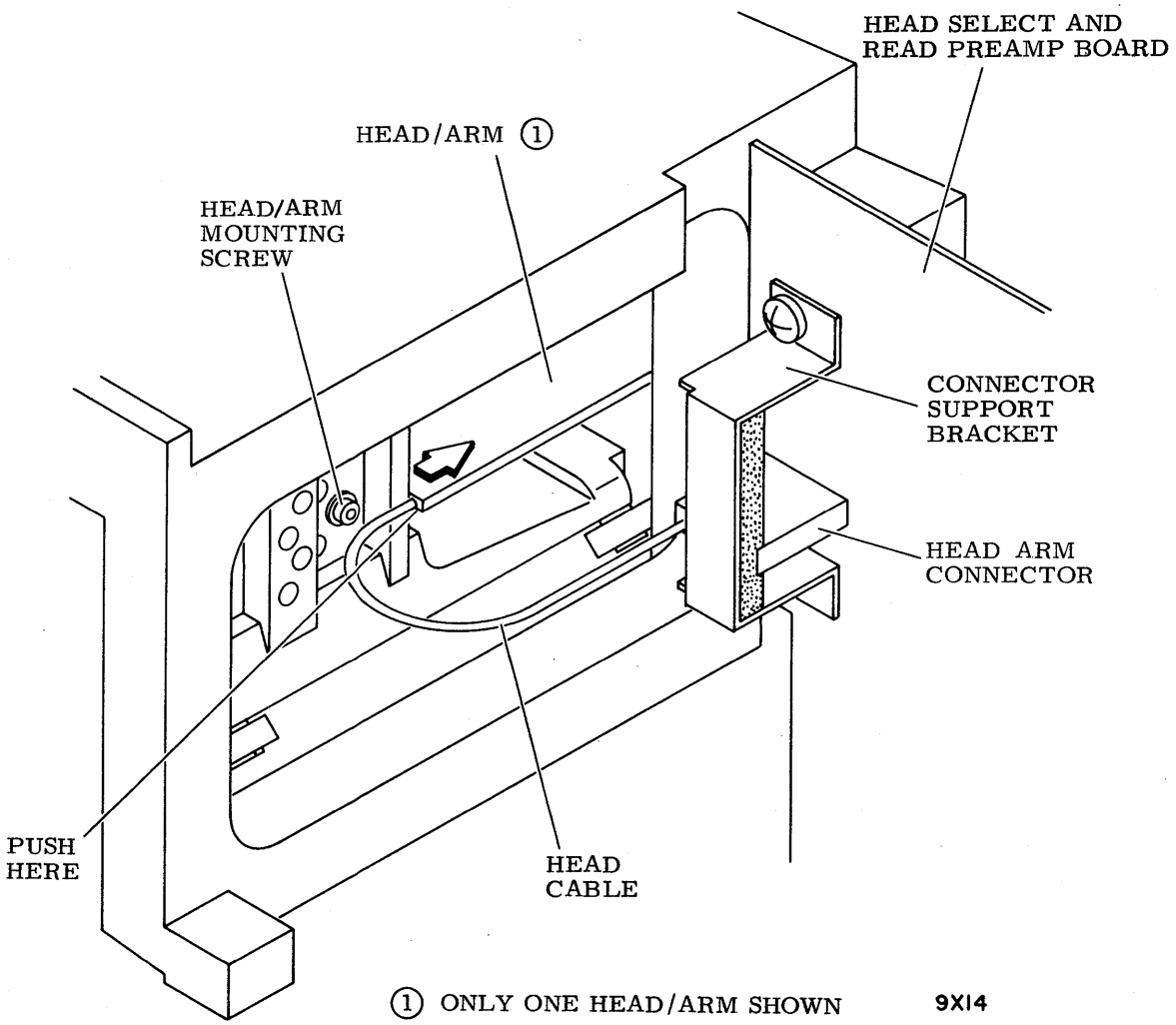

Figure 2-32. Head Replacement - Left Side View

2-30. Repair of the head arm assemblies is limited to inspection and cleaning, refer to the Repair paragraph for details and limits.

Adjustment

Adjustment of the head arm assemblies is covered in Section 2C, Test and Adjustment.

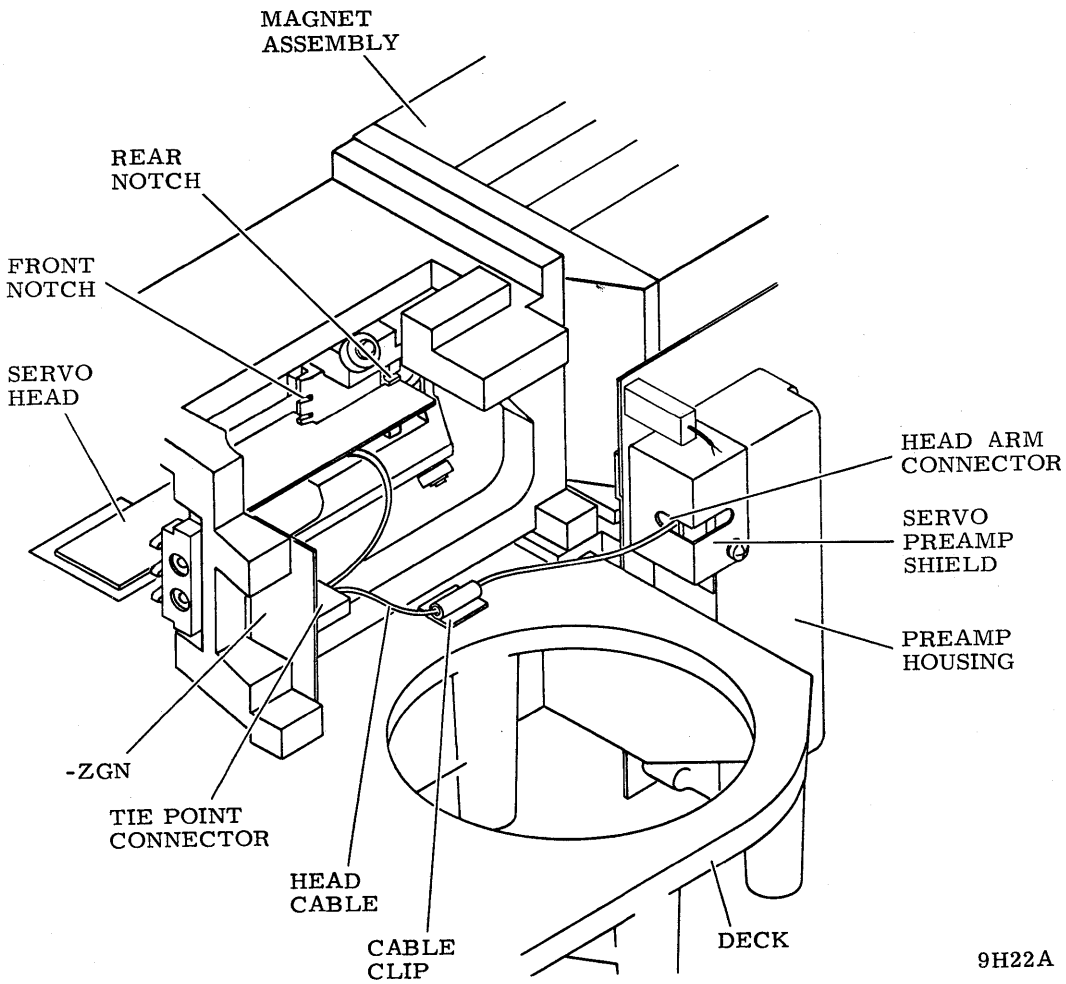

Figure 2-33. Head Replacement - Right Side View

Removal-Replacement

The following procedure covers removal and replacement of either the servo head or the read/write heads. Remove heads from the carriage only to perform head inspection and cleaning, or as directed by other procedures in this manual. When removing the servo head also remove read/write head number two. This allows room for the head cable and connectors to pass between the adjacent head arms with a lessened chance of doing damage.

1. Remove connector support bracket or servo pre-amplifier shield and disconnect head arm connector for subject head (for servo head, also remove head cable from cable clip and disconnect tie point connector).

2. Remove head mounting screw and associated hardware.

3. Manually extend heads far enough to be able to grasp front of head arm from inside pack area.

CAUTION

Head pads and gimbal springs are extremely delicate and easily damaged. Grasp head arms carefully and only be edges of head arm. If head pad is touched, perform head cleaning procedure.

4. Carefully grasp subject head arm at front and also push gently on rear of head arm as shown in figure 2-32. Guide head arm and connector(s) through adjacent head arms and into pack area.

5. Perform required maintenance procedure.

6. Install head arm assembly by fully extending heads into pack area, and guiding head arm connector between adjacent head arms. Use care not to damage adjacent heads.

7. Seat head arm in both front and rear notches on carriage.

8. Carefully position head arm as required in order to insert head mounting screw. Support head arm from opposite side when inserting head mounting screw or forward pressure of wrench may dislodge head arm.

9. Ensure that head arm assembly is aligned in relation to remainder of heads where they protrude into pack area.

10. Tighten screw, securing head arm assembly toi carriage, util torque is between 1.3 and 1.4 N·M (11.5 and 12.5 Lbf·in).

11. Carefully receonnect head arm connector and replace related hardware removed in step 1.

12. Perform Head Arm Adjustment procedure.

Repair

The drive has a positive pressure filtration system that eliminates the need for periodic inspection and cleaning of heads. The heads should be inspected for the following reasons only:

1. A problem is traced to a specific head or heads; for example, excessive data errors.

2. Head to disk contact is suspected. This may be indicated by an audible ping, scratching noise, or a burning odor when the heads are over the disk area.

3. Concentric scratches are observed on the disk surfaces.

4. Contamination of pack is suspected (possibly due to improper storage of the pack).

5. The pack has been physically damaged (possibly due to dropping or bumping.

CAUTION

Do not attempt to operate the media on another drive until full assurance is made that no dam- age or contamination has occurred to the media.

Do not attempt to operate the drive with another media until full assurance is made that no damage or contamination has occurred to the drive heads or to the shroud area.

Head Inspection

CAUTION

Do not smoke when inspecting or cleaning heads. Use extreme care not to damage the head.

Do not touch the head pad or gimbal spring with fingers or tools.

If head must be laid down, do not allow the head pad or gimbal spring to touch anything.

Remove suspected head as described in the Read/Write Servo Head/Arm Replacement procedure. Referring to figure 2-31, observe the head/arm, and perform the suggested remedy as follows:

1. If reddish-brown oxide deposits exist on the head, replace or clean the head/arm assembly.

2. If head appears scratched, replace or clean the head/arm assembly.

3. If head appears damaged, replace the head/arm assembly.

4. If the gimbal spring (it holds the head pad to the arm) is bent or damaged, replace the head/arm assembly.

Head Cleaning

CAUTION

Head cleaning is a delicate procedure which is not recommended. It should not be undertaken unless it is absolutely necessary and then it should be performed by properly trained personnel only.

Refer to figure 2-32 if head cleaning is required and perform the following procedure. Use care not to damage any part of the head arm assembly.

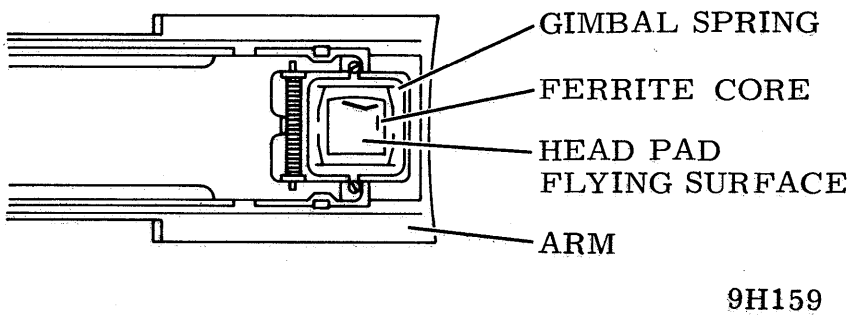

Figure 2-34. Typical Head/Arm Components

CAUTION

In the following step, hold the can of dust remover upright (vertical). If the can is not held upright, liquid propellant will be sprayed on the head.

1. Use super dry dust remover (see list of Maintenance Tools and Materials) to blow off all loose particles from the head pad (flying surface), from the edge of the head pad, and from the holes in the head pad. Hold the nozzle 6 to 12 mm (1/4 to 1/2 in) from the head pad. Spray with a back and forth motion across the head pad, making certain to hold the can only in a vertical position.

2. Clean a smooth, flat working surface, for example, a glass or formica table top.

3. Place a new, unpunched, clean computer card with the back side up (printing down) on the clean flat working surface as shown in figure 2-32.

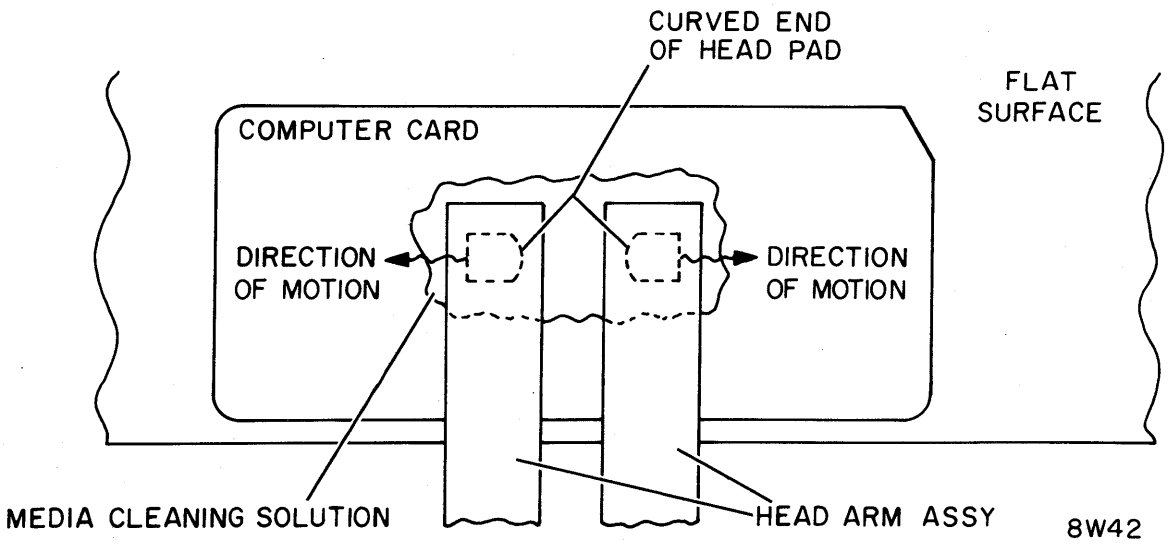

Figure 2-35. Head Cleaning Motion

CAUTION

Care should be taken to avoid excess cleaning solution. Excess solution on the head cable may remove the plasticizer and make the cable stiff. A stiff cable reduces the flexibility of the head pad and could cause broken wires.

4. Moisten a small area in the center of the card with media cleaning solution. (Refer to the list of Maintenance Tools and Materials.)

CAUTION

Inspect the media cleaning solution for contamination, rust, dirt, etc. Do not use contaminated solution.

5. Very carefully place the head pad flying surface on moistened area and move head pad from moistened area to dry area in a zig-zag motion as shown in figure 2-32. Move head in a direction away from curved end of head pad. If it is moved in the opposite direction the sharp edge of the curved end will cut into the computer card and prevent movement and proper cleaning.

6. Blow off the head again using the super dry dust remover as in step 1.

NOTE

Discoloration of media cleaning solution and computer card indicate that oxide particles are being removed from head pad flying surface.

7. Repeat steps 3, 4, 5 and 6 using a clean computer card and clean media cleaning solution each time until no discoloration on card is present.

8. After discoloration has ceased, inspect head to determine that oxide deposits were removed. If deposits remain but show signs of being removed repeat cleaning procedure until deposits are removed.

9. If oxide deposits cannot be removed, replace head/arm assembly.

10. If oxide deposits were removed and head passes inspection according to the Head/Arm Replacement Criteria, reinstall head.

11. Follow Read/Write or Servo/Head Arm Replacement procedure to install cleaned head or a replacement head as required.

Head/Arm Replacement Criteria

A head arm assembly requires replacement if any of the following conditions exist:

1. Consistent oxide buildup on the same head, indicating repeated head to disk contact.

2. Appreciable oxide buildup which cannot be removed.

3. Scratches on the head flying surface.

4. Imbedded particles in the head pad flying surface.

5. Bent or damaged gimbal spring.

6. Any apparent physical damage to head/arm assembly.

CABLE ASSEMBLIES (W1 THROUGH W4, W6, W11, W12)

Part numbers for all cable assemblies are listed on figure 3-22, sheet 1. Cable assemblies are not illustrated in their entirety; however, all connectors, pin, etc, are illustrated (and the part numbers given) at the point of origin or destination. This information is, therefore, spread throughout the parts data section.

Adjustment

Other than positioning the cable assemblies to provide proper strain relief, no adjustment of the cable assemblies is required.

Removal-Replacement

The cable assemblies rarely, if ever, need to be removed from the drive. However, during normal maintenance, it may be necessary to separate the cable from the item to which it is attached. The connectors on all cables in the drive may be removed directly, or simply by squeezing its locking devices. If a connector does not separate easily from its mating half, carefully insert a blunt tool between the two halves and gently pry them apart. Trying to exert excessive force, in the process of separating a connector, could cause damage to other components in the drive.

Repair

Repair of the various cable assemblies consists of replacing broken or damaged parts. All parts of the cable assemblies are called out in the parts data section. Some of the connections in the drive are crimp-type, and require the use of expensive tools. These connections can be repaired by first tinning the wires and then carefully crimping them into the pins with a pair of pliers. To ensure electrical and mechanical integrity of these connections, they should then be carefully reheated with a soldering iron to allow the solder to flow onto the pin.

SECTION 3

PARTS DATA

INTRODUCTION

This section provides an Illustrated Parts Breakdown and a Spare Parts List for all the storage module drives (SMDs) listed in the preface of this manual.

Information in this section is divided into two major categories as follows:

Illustrated Parts Breakdown - This breakdown provides part number information for all field replaceable items.

Spare Parts List - This is a list of recommended spare parts.

NOTE

Parts listed in the illustrated parts breakdown, but not in the spare parts list, may be long lead time items subject to significant delays.

SECTION 3A

ILLUSTRATED PARTS BREAKDOWN

GENERAL

The Illustrated Parts Breakdown (IPB) provides the information needed to order field replaceable parts. This information is presented in assembly illustrations and parts lists.

The symbols used in this section are explained in the following paragraphs along with a definition of some of the abbreviations used. Refer to the front of this manual for a complete list of abbreviations.

The illustrated parts breakdown is structured as follows. Each major assembly is shown in an exploded view and assigned a figure number. More than one illustration per figure number may be required for a complex assembly. In this case, the illustrations are titled X (sheet 1); figure X (sheet 2), etc. The parts shown on the illustration are numbered. A parts list for each illustration begins on the page facing the illustration. The numbers on the figure correspond to the index numbers on the associated parts list. In some cases, the parts list will have more than one page for the corresponding sheet of a figure.

The Illustrated Parts Breakdown is divided into four columns:

Index Number Column - The numbers given in this column correspond to the numbers shown on the illustration. When more than one entry is given for a particular index number, the use of each part is defined in the Notes column. Items may be listed without index numbers, and are mentioned for reference only. These items do not appear on the illustration.

Part Number Column - This column provides the eight digit number by which a part may be ordered. There are several conditions when there will be an incomplete number or no number at all. In some cases the last two digits (referred to as tab numbers) may be shown as XX. This situation exists when an assembly changes tab numbers rapidly in the course of normal factory build. If it is necessary to order an assembly catalogued in this manner, the actual part number can be found

on the part number label attached to the assembly. If the actual part number cannot be determined, be sure to include on the order the series code of the machine and a listing of all the change orders installed. NFR in the part number column indicates that an assembly is not field replaceable. If repair of the NFR item is necessary, refer to the maintenance section of this manual for further information.

The symbol ## in the part number column indicates that the item is a recommended spare part, and that the part number is located in the Spare Parts List section. To find the part number refer to the instructions for using the Spare Parts List (section 3B).

Description Column - This column gives the name and a brief description of each part and assembly. The relationship of parts and assemblies is shown within the column by means of indentation. Each indented item is part of the previously listed item as a lesser indentation.

When the attaching hardware or associated parts for an item cannot be shown on the illustration, the note (ATTACHING PARTS) or (ASSOCIATED PARTS) appears in the Description column. All attaching/associated parts for the previously listed part or assembly are listed beneath this note and are separated from the rest of the parts list by the symbol ---*---.

When necessary, items are identified as being right side or left side. Right and left are determined by facing the front (pack end) of the drive.

Notes Column - This column defines multiple part number entries for a single index number. Multiple entries may be necessary to identify differences such as machine configuration (for example, whether the part is for a 50 Hz or 60 Hz unit) or to track history (for example, the part issued only on a series code 17 unit with Engineering Change Order (ECO) 48700 installed). Information that is unique to one particular equipment or application will also be noted in this column.

TABLE 3-1. COLOR CODE CHART

COLOR CODE	CASE			PACK ACCESS COVER		FRONT DOOR		REAR DOOR		LEFT SIDE PANEL		RIGHT SIDE PANEL		TOP PANEL		CASE DOOR		FILLER PANEL-UPPER		FILLER PANEL-LOWER		COMMENTS
	ASSY TAB *	ASSY TAB +	PC PT TAB	ASSY TAB	PC PT TAB	ASSY TAB	PC PT TAB	ASSY TAB	PC PT TAB	ASSY TAB	PC PT TAB	ASSY TAB	PC PT TAB	ASSY TAB	PC PT TAB	ASSY TAB	PC PT TAB	ASSY TAB	PC PT TAB	ASSY TAB	PC PT TAB	
A	00	02	03	32	09	–	–	–	–	–	–	–	–	–	–	–	03	–	–	–	–	S/C 32 & BLW
A	00	02	03	64	09	–	–	–	–	–	–	–	–	–	–	–	03	–	–	–	–	S/C 33 & ABV
B	01	06	03	32	09	–	–	–	–	–	–	–	–	–	–	–	03	–	–	–	–	S/C 32 & BLW
B	01	06	03	64	09	–	–	–	–	–	–	–	–	–	–	–	03	–	–	–	–	S/C 33 & ABV
C	01	07	03	32	09	–	06	–	06	–	03	–	03	–	03	–	03	–	–	–	–	S/C 32 & BLW
C	01	07	03	64	09	–	06	–	06	–	03	–	03	–	03	–	03	–	–	–	–	S/C 33 & ABV
D	01	09	03	31	09	–	–	18	09	–	–	–	–	–	–	–	03	–	03	–	09	
E	01	09	03	31	09	–	–	19	09	–	–	–	–	–	–	–	03	–	03	–	09	
F	01	23	03	31	09	01	09	22	09	02	03	03	03	–	–	–	–	–	–	–	–	
G	01	23	03	31	09	01	09	23	09	02	03	03	03	–	–	–	–	–	–	–	–	
H	02	08	36	42	36	–	36	–	37	–	37	–	37	–	37	–	36	–	–	–	–	S/C 32 & BLW
H	02	08	36	74	36	–	36	–	37	–	37	–	37	–	37	–	36	–	–	–	–	S/C 33 & ABV
J	04	10	72	45	71	–	71	–	71	–	72	–	72	–	72	–	72	–	–	–	–	
K	03	09	63	43	66	–	63	–	64	–	65	–	65	–	63	–	63	–	–	–	–	S/C 32 & BLW
K	03	09	63	75	66	–	63	–	64	–	65	–	65	–	63	–	63	–	–	–	–	S/C 33 & ABV
L	–	04	34	28	33	–	33	–	33	–	34	–	34	–	34	–	34	–	–	–	–	S/C 15 W/O 48576 & BLW
L	–	01	03	28	33	–	33	–	33	–	03	–	03	–	03	–	03	–	–	–	–	S/C 15 S/C 16 W/48576
L	01	07	03	44	33	–	33	–	33	–	03	–	03	–	03	–	03	–	–	–	–	S/C 17 – S/C 32
																						(See Note *)
L	01	07	03	76	33	–	33	–	33	–	03	–	03	–	03	–	03	–	–	–	–	S/C 33 & ABV
M	–	11	34	18	33	05	33	29	33	10	34	11	34	–	–	–	–	–	–	–	–	S/C 15 W/O 48576 & BLW
M	–	04	03	18	33	03	33	29	33	02	03	03	03	–	–	–	–	–	–	–	–	S/C 15,S/C 16 W/48576

* W/55155B
\+ W/O 55155B

KØR 0659-IA

This color code chart, used in conjunction with the equipment configuration chart (see front of this manual) and the parts list, will provide the eight-digit number needed to order painted parts for all units covered by this manual.

First, determine the correct color code by referring to the equipment configuration chart. Then, find that code in the color code column of this chart. Following the code are the tab numbers for each painted part. If an entire assembly is being replaced, use the two digits listed under ASSY TAB. If just the piece part is needed use the two digits listed under PC PT TAB. The parts list contains the first six digits of each part number plus the symbol "**" (for example 775601**). The complete number is obtained by substituting the tab numbers in place of the symbol "**".

TABLE 3-1. COLOR CODE CHART

COLOR CODE	CASE			PACK ACCESS COVER		FRONT DOOR		REAR DOOR		LEFT SIDE PANEL		RIGHT SIDE PANEL		TOP PANEL		CASE DOOR		FILLER PANEL-UPPER		FILLER PANEL-LOWER		COMMENTS
	ASSY TAB		PC PT TAB	ASSY TAB	PC PT TAB	ASSY TAB	PC PT TAB	ASSY TAB	PC PT TAB	ASSY TAB	PC PT TAB	ASSY TAB	PC PT TAB	ASSY TAB	PC PT TAB	ASSY TAB	PC PT TAB	ASSY TAB	PC PT TAB	ASSY TAB	PC PT TAB	
	*	+																				
M	01	23	03	35	33	05	33	29	33	02	03	03	03	–	–	–	–	–	–	–	–	S/C 17 & ABV (See Note*)
N	–	06	34	18	33	–	–	21	33	–	–	–	–	–	–	–	–	–	–	–	–	S/C 15 W/O 48576 & BLW
N	–	01	03	18	33	–	–	21	33	–	–	–	–	–	–	–	–	–	–	–	–	S/C 15,S/C 16 W/48576
N	01	09	03	35	33	–	–	21	33	–	–	–	–	–	–	–	–	–	–	–	–	S/C 17 & ABV (See Note*)
P	–	–	–	30	04	–	–	–	–	–	–	–	–	–	–	–	–	–	–	–	–	
R	–	06	34	18	33	–	–	25	33	–	–	–	–	–	–	–	–	–	–	–	–	S/C 15 W/O 48576 & BLW
R	01	09	03	18	35	–	–	25	33	–	–	–	–	–	–	–	–	–	–	–	–	S/C 15 & ABV W/ 48576 (See Note *)
S	05	27	81	45	80	18	79	49	79	30	81	31	81	–	–	–	–	–	–	–	–	
T	04	15	81	45	80	–	–	16	79	–	–	–	–	–	–	–	81	–	79	–	79	
U	04	15	81	45	80	–	–	27	79	–	–	–	–	–	–	–	81	–	79	–	79	
V	06	13	74	49	73	–	74	–	74	–	74	–	74	–	74	–	74	–	–	–	–	S/C 32 & BLW
V	06	13	74	80	73	–	74	–	74	–	74	–	74	–	74	–	74	–	–	–	–	S/C 33 & ABV
W	07	15	85	51	85	–	85	–	84	–	84	–	84	–	84	–	85	–	–	–	–	S/C 32 & BLW
W	07	15	85	81	85	–	85	–	84	–	84	–	84	–	84	–	85	–	–	–	–	S/C 33 & ABV
X	–	19	73	26	73	15	74	47	74	26	74	27	74	–	–	–	–	–	–	–	–	S/C 21 & BLW W/O 55155B (See Note +)
X	12	35	73	43	73	15	74	47	74	26	74	27	74	–	–	–	–	–	–	–	–	S/C 21 & ABV W/ 55155B (See Note *)
Y	–	19	73	26	73	15	74	48	74	27	74	27	74	–	–	–	–	–	–	–	–	S/C 21 & BLW W/O 55155B (See Note +)
Y	12	19	73	43	73	15	74	48	74	27	74	27	74	–	–	–	–	–	–	–	–	S/C 21 & ABV W/ 55155B (See Note *)
Z	05	27	81	45	80	18	79	50	79	30	81	31	81	–	–	–	–	–	–	–	–	
AA	05	16	87	46	86	–	–	28	88	–	–	–	–	–	–	–	87	–	88	–	88	
AB	14	37	87	46	86	19	88	52	88	34	87	35	87	–	–	–	–	–	–	–	–	
AC	06	17	04	30	04	–	–	29	04	–	–	–	–	–	–	–	04	–	04	–	04	

* W/55155B
+ W/O 55155B

KØR-0659A

TABLE 3-1. COLOR CODE CHART

COLOR CODE	CASE			PACK ACCESS COVER		FRONT DOOR		REAR DOOR		LEFT SIDE PANEL		RIGHT SIDE PANEL		TOP PANEL		CASE DOOR		FILLER PANEL-UPPER		FILLER PANEL-LOWER		COMMENTS
	ASSY TAB *	ASSY TAB +	PC PT TAB	ASSY TAB	PC PT TAB	ASSY TAB	PC PT TAB	ASSY TAB	PC PT TAB	ASSY TAB	PC PT TAB	ASSY TAB	PC PT TAB	ASSY TAB	PC PT TAB	ASSY TAB	PC PT TAB	ASSY TAB	PC PT TAB	ASSY TAB	PC PT TAB	
AD	00	22	02	30	04	21	04	54	04	38	04	39	04	–	–	–	–	–	–	–	–	
AE	–	06	76	31	77	–	75	–	75	–	76	–	76	–	76	–	76	–	–	–	–	S/C 21 & BLW W/O 55155B (See Note +)
AE	05	11	76	47	77	–	75	–	75	–	76	–	76	–	76	–	76	–	–	–	–	S/C 21-S/C 32 (See Note *)
AE	05	11	76	79	77	–	75	–	75	–	76	–	76	–	76	–	76	–	–	–	–	S/C 33 & ABV
AF	16	39	91	48	92	22	92	55	92	40	91	41	91	–	–	–	–	–	–	–	–	
AG	16	39	91	48	92	22	92	56	92	40	91	41	91	–	–	–	–	–	–	–	–	
AH	00	02	03	53	03	–	–	–	–	–	–	–	–	–	–	–	03	–	–	–	–	S/C 32 & BLW
AH	00	02	03	83	03	–	–	–	–	–	–	–	–	–	–	–	03	–	–	–	–	S/C 33 & ABV
AJ	08	16	99	54	98	–	98	–	99	–	99	–	99	–	99	–	99	–	–	–	–	S/C 32 & BLW
AJ	08	16	99	84	98	–	98	–	99	–	99	–	99	–	99	–	99	–	–	–	–	S/C 33 & ABV
AK	–	09	05	56	06	–	03	–	05	–	04	–	04	–	05	–	05	–	–	–	–	
AL	23	–	03	54	–	28	–	58	–	48	–	49	–	–	–	–	–	–	–	–	–	
AM	–	–	–	32	09	–	–	–	–	–	–	–	–	–	–	–	–	–	–	–	–	S/C 32 & BLW
AM	–	–	–	64	09	–	–	–	–	–	–	–	–	–	–	–	–	–	–	–	–	S/C 33 & ABV
AN	01	–	03	56	09	30	–	59	–	02	–	03	–	–	–	–	–	–	–	–	–	
AP	01	–	03	56	09	30	–	60	–	02	–	03	–	–	–	–	–	–	–	–	–	
AR	02	–	96	58	09	–	–	–	–	–	–	–	–	–	–	–	96	–	–	–	–	S/C 32 & BLW
AR	02	–	96	88	09	–	–	–	–	–	–	–	–	–	–	–	96	–	–	–	–	S/C 33 & ABV
AS	26	–	13	57	14	32	14	37	14	54	13	55	13	–	–	–	–	–	–	–	–	
AT	27	–	13	58	14	33	14	38	14	56	13	57	13	–	–	–	–	–	–	–	–	
AU	10	–	13	57	14	–	–	–	–	–	–	–	–	–	–	–	13	–	14	–	14	
AV	10	–	13	58	14	–	–	–	–	–	–	–	–	–	–	–	13	–	14	–	14	
AW	12	–	72	69	71	–	71	–	71	–	72	–	72	–	72	–	72	–	–	–	–	S/C 29 W/O 55925 & BLW
AW	12	–	31	69	71	–	71	–	71	–	31	–	31	–	31	–	31	–	–	–	–	S/C 29 W/55925 & ABV
AX	01	–	11	59	11	–	–	–	–	–	–	–	–	–	–	–	11	–	–	–	–	S/C 32 & BLW
AX	01	–	11	89	11	–	–	–	–	–	–	–	–	–	–	–	11	–	–	–	–	S/C 33 & ABV
AY	13	–	22	36	22	–	22	–	22	–	23	–	23	–	23	–	22	–	–	–	–	S/C 32 & BLW

* W/55155B
\+ W/O 55155B

KØR-0659A

TABLE 3-1. COLOR CODE CHART

COLOR CODE	CASE			PACK ACCESS COVER		FRONT DOOR		REAR DOOR		LEFT SIDE PANEL		RIGHT SIDE PANEL		TOP PANEL		CASE DOOR		FILLER PANEL-UPPER		FILLER PANEL-LOWER		COMMENTS
	ASSY TAB *	ASSY TAB +	PC PT TAB	ASSY TAB	PC PT TAB	ASSY TAB	PC PT TAB	ASSY TAB	PC PT TAB	ASSY TAB	PC PT TAB	ASSY TAB	PC PT TAB	ASSY TAB	PC PT TAB	ASSY TAB	PC PT TAB	ASSY TAB	PC PT TAB	ASSY TAB	PC PT TAB	
AY	13	–	22	68	22	–	22	–	22	–	23	–	23	–	23	–	22	–	–	–	–	S/C 33 & ABV
AZ	09	–	45	40	46	–	45	–	44	–	44	–	44	–	45	–	45	–	–	–	–	S/C 32 & BLW
AZ	09	–	45	72	46	–	45	–	44	–	44	–	44	–	45	–	45	–	–	–	–	S/C 33 & ABV
BA	14	–	20	62	21	–	20	–	20	–	20	–	20	–	20	–	20	–	–	–	–	S/C 32 & BLW
BA	18	–	40	92	21	–	40	–	40	–	40	–	40	–	40	–	40	–	–	–	–	S/C 33 & ABV
BB	03	–	19	61	18	–	–	–	–	–	–	–	–	–	–	–	19	–	–	–	–	S/C 32 & BLW
BB	03	–	19	91	18	–	–	–	–	–	–	–	–	–	–	–	19	–	–	–	–	S/C 33 & ABV
BC	15	–	03	41	53	–	54	–	54	–	53	–	53	–	54	–	54	–	–	–	–	S/C 32 & BLW
BC	15	–	03	73	53	–	54	–	54	–	53	–	53	–	54	–	54	–	–	–	–	S/C 33 & ABV
BD	11	–	27	62	26	–	–	–	–	–	–	–	–	–	–	–	27	–	26	–	26	
BE	30	–	27	62	26	37	27	56	26	62	27	63	27	–	–	–	–	–	–	–	–	
BF	30	–	27	62	26	37	27	57	26	62	27	63	27	–	–	–	–	–	–	–	–	
BG	01	–	00	00	03	–	–	–	–	–	–	–	–	–	–	–	03	–	–	–	–	
BH	32	–	33	64	01	39	33	59	34	66	33	67	33	–	–	–	–	–	–	–	–	
BJ	32	–	33	64	01	39	33	60	34	66	33	67	33	–	–	–	–	–	–	–	–	
BK	12	–	33	64	01	–	–	59	34	–	–	–	–	–	–	–	33	–	33	–	33	
BL	12	–	33	64	01	–	–	60	34	–	–	–	–	–	–	–	33	–	33	–	33	
BM	33	–	36	65	36	40	36	61	35	68	35	69	35	–	–	–	–	–	–	–	–	
BN	33	–	36	65	36	40	36	62	35	68	35	69	35	–	–	–	–	–	–	–	–	
BP	03	–	96	94	95	–	–	–	–	–	–	–	–	–	–	–	96	–	–	–	–	
BR	40	–	96	66	95	42	95	63	95	72	96	73	96	–	–	–	–	–	–	–	–	
BS	09	–	09	55	09	–	–	–	–	–	–	–	–	–	–	–	09	–	09	–	09	
BT	24	–	10	55	09	29	09	35	09	50	10	51	10	–	–	–	–	–	–	–	–	
BU	24	–	10	55	09	29	09	36	09	50	10	51	10	–	–	–	–	–	–	–	–	
BV	41	–	53	67	57	43	53	64	52	74	53	75	53	–	–	–	–	–	–	–	–	
BW	42	–	58	68	59	44	59	65	59	76	58	77	58	–	–	–	–	–	–	–	–	
BX	44	–	34	70	39	46	38	67	38	80	38	81	38	–	–	–	–	–	–	–	–	
BY	44	–	34	70	39	46	38	68	38	80	38	81	38	–	–	–	–	–	–	–	–	
BZ	45	–	06	71	06	47	03	69	05	82	04	83	04	–	–	–	–	–	–	–	–	

* W/55155B
\+ W/O 55155B

KØR-0659A

TABLE 3-1. COLOR CODE CHART

COLOR CODE	CASE			PACK ACCESS COVER		FRONT DOOR		REAR DOOR		LEFT SIDE PANEL		RIGHT SIDE PANEL		TOP PANEL		CASE DOOR		FILLER PANEL-UPPER		FILLER PANEL-LOWER		COMMENTS
	ASSY TAB		PC PT TAB	ASSY TAB	PC PT TAB	ASSY TAB	PC PT TAB	ASSY TAB	PC PT TAB	ASSY TAB	PC PT TAB	ASSY TAB	PC PT TAB	ASSY TAB	PC PT TAB	ASSY TAB	PC PT TAB	ASSY TAB	PC PT TAB	ASSY TAB	PC PT TAB	
	*	+																				

* W/55155B
+ W/O 55155B

KØR-0659A

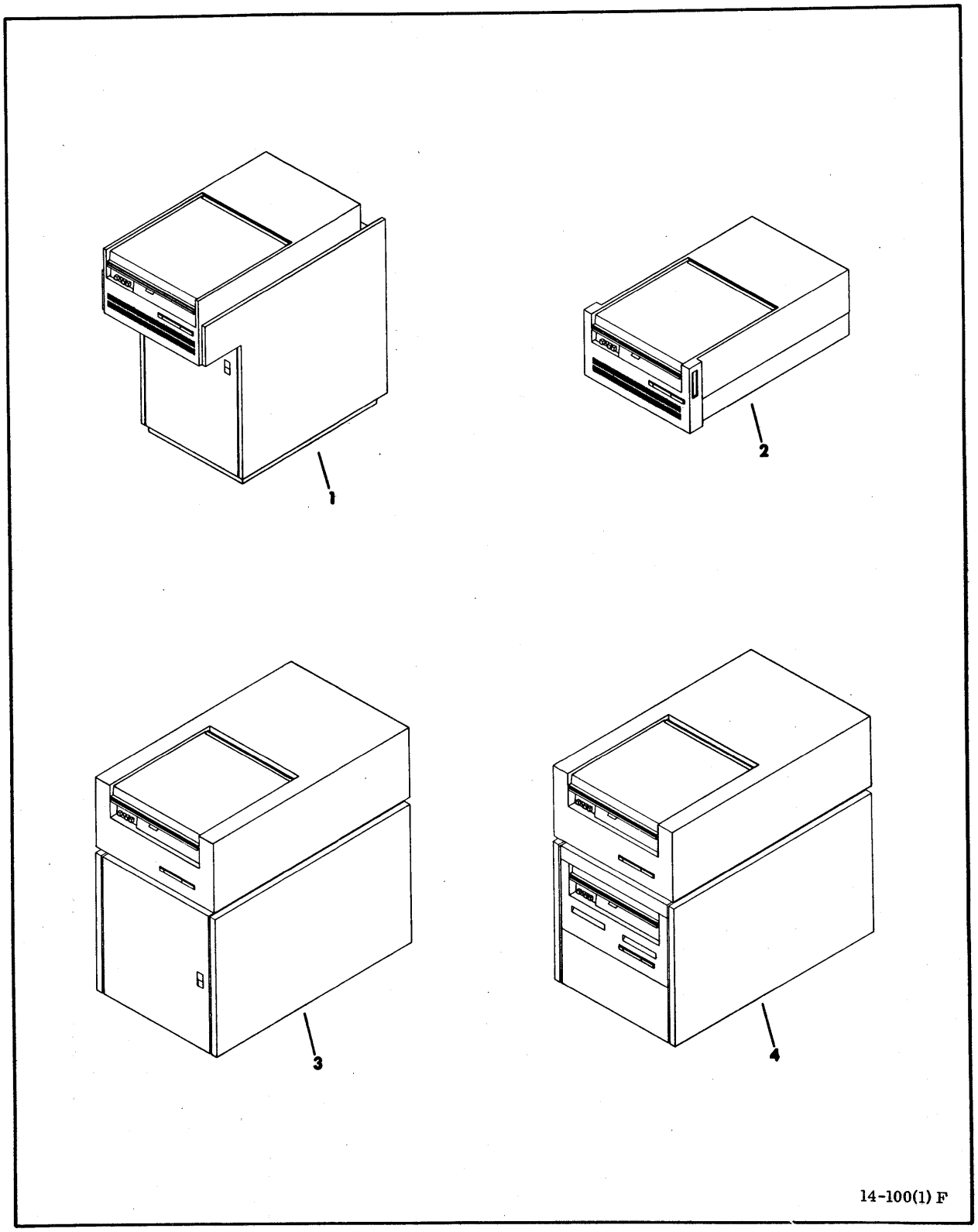

Figure 3-1. Final Assembly (Sheet 1 of 2)

INDEX NO	PART NO	PART DESCRIPTION	NOTE
3-1		FINAL ASSEMBLY (Sheet 1 of 2)	
1		FINAL ASSEMBLY, Pedestal (See Figure 3-2)	
2		FINAL ASSEMBLY, 30 inch Rack Mount (See Figure 3-5)	
2		FINAL ASSEMBLY, 36 inch Rack Mount (See Figure 3-6)	
3		FINAL ASSEMBLY, Acoustic Cabinet (See Figure 3-3)	
4		FINAL ASSEMBLY, Acoustic Drawer (See Figure 3-4)	

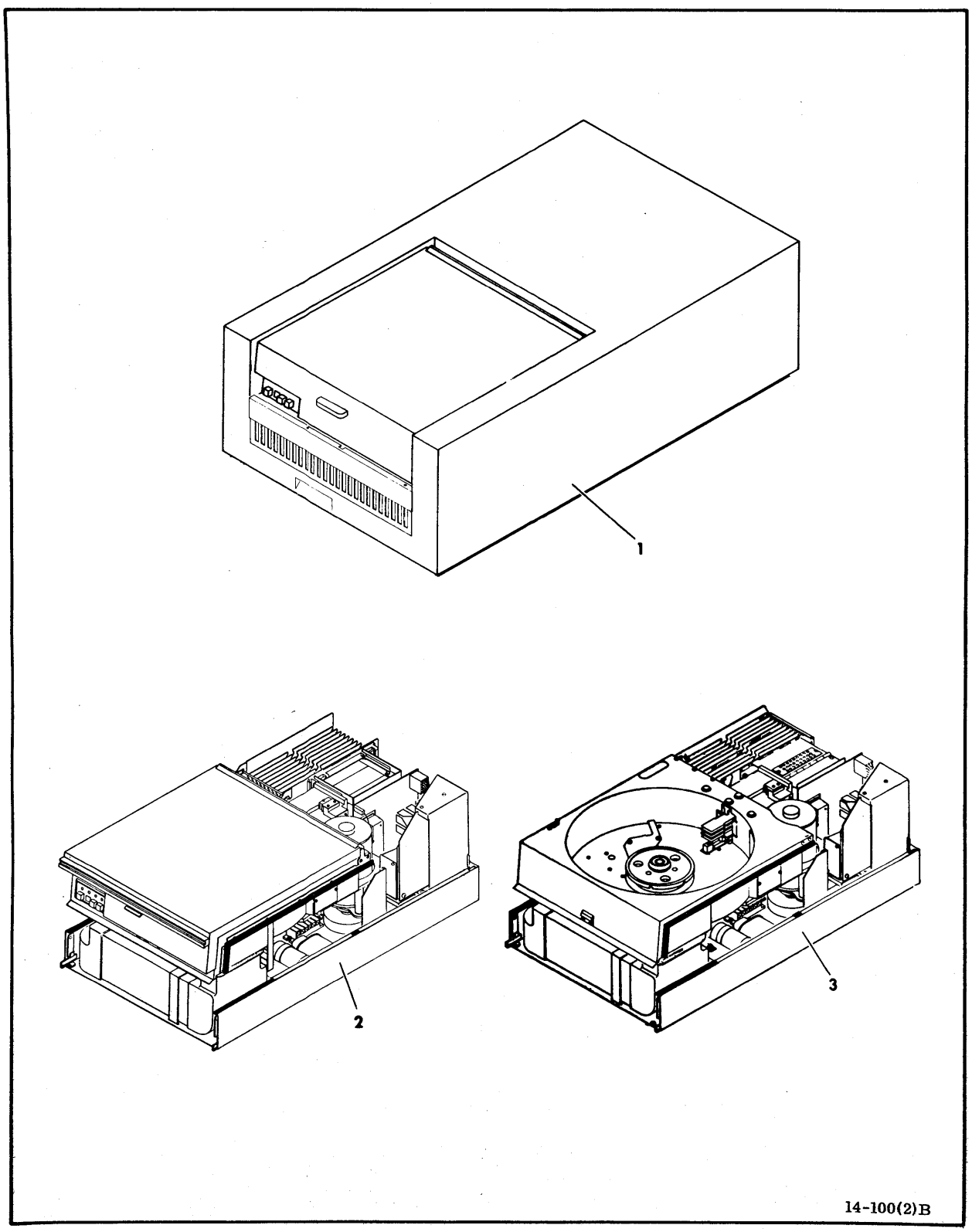

Figure 3-1. Final Assembly (Sheet 2)

INDEX NO	PART NO	PART DESCRIPTION	NOTE
3-1		FINAL ASSEMBLY (Sheet 2)	
1		FINAL ASSEMBLY, Universal Cabinet (See Figure 3-6)	
2		FINAL ASSEMBLY, Nude (See Figure 3-7)	
3		FINAL ASSEMBLY, Basic (See Figure 3-22)	

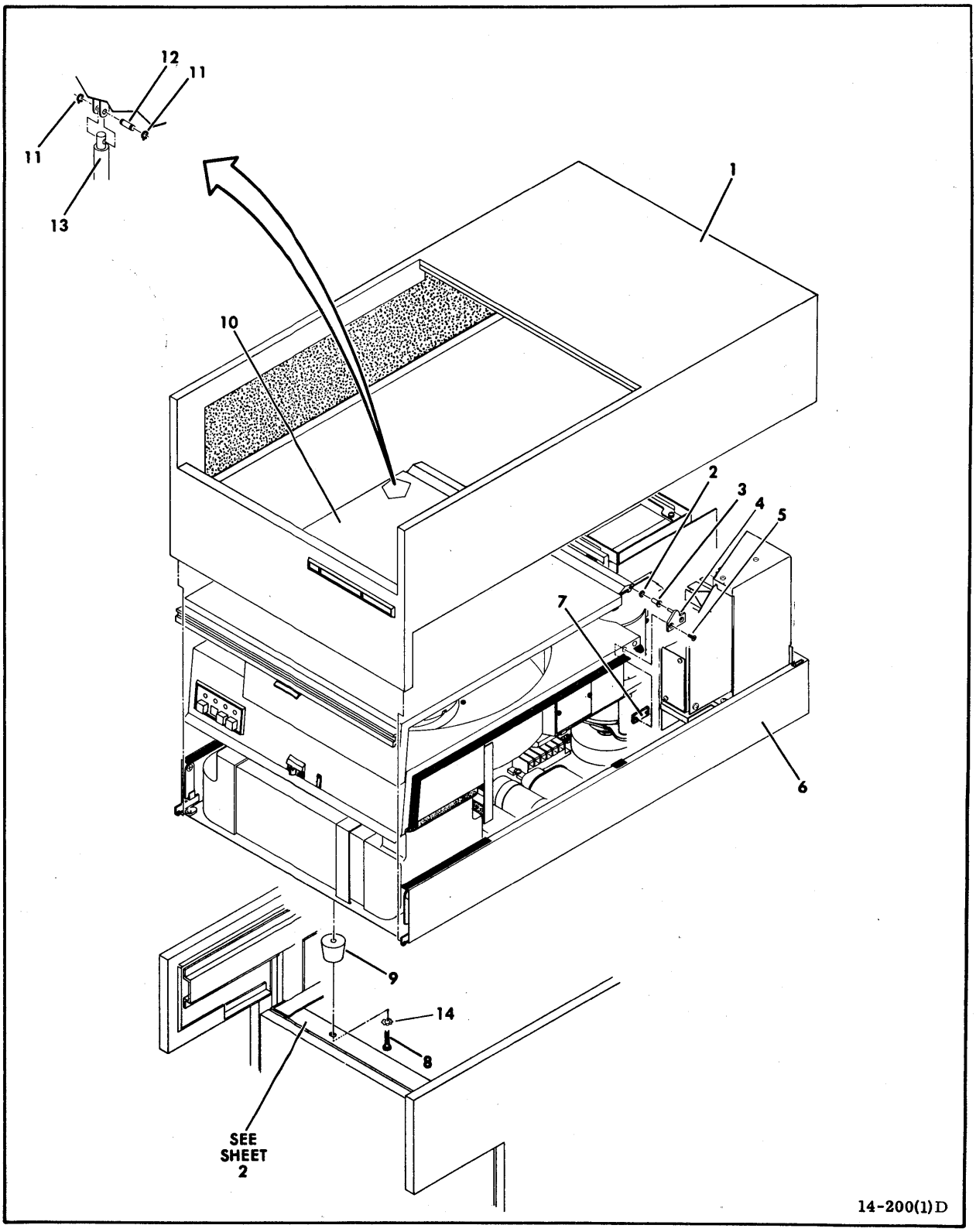

Figure 3-2. Final Assembly - Pedestal (Sheet 1 of 2)

INDEX NO	PART NO	PART DESCRIPTION	NOTE
3-2		FINAL ASSEMBLY, Pedestal (Sheet 1 of 2)	
1		CASE ASSEMBLY, Pedestal (See Figure 3-8)	
2	76419100	SPACER, Pack Cover	S/C 32 & Blw
2	75174202	WASHER, Slide	S/C 33 & Abv
3	41274008	BEARING, Flanged	S/C 32 & Blw
3	76429600	BUSHING, Pack Cover	S/C 33 & Abv
4	75070000	HINGE, Pin	Right Side, S/C 32 & Blw
4	75070002	HINGE, Pin	Right Side, S/C 33 & Abv
4	75070001	HINGE, Pin (Not Shown)	Left Side, S/C 32 & Blw
4	75070003	HINGE, Pin (Not Shown)	Left Side, S/C 33 & Abv
5	10125715	SCREW, 6-32 x 1/2, Flat Head	
6		DRIVE ELECTRONICS (See Figure 3-22)	
7	75173306	PLATE, Nut	
8	10127147	SCREW, 10-32 x 1, Pan Head Machine	
9	43109282	SPACER, Stand Off	
10		PACK ACCESS COVER ASSEMBLY, Non-acoustic (See Figure 3-14)	
11	92033221	RING, Retaining	
12	75071700	PIN, Cover Pivot	
13		SPRING, Gas (See Deck Assembly, Sheet 6, For Part Number)	
14	10126403	WASHER, #10 External Tooth Lock	

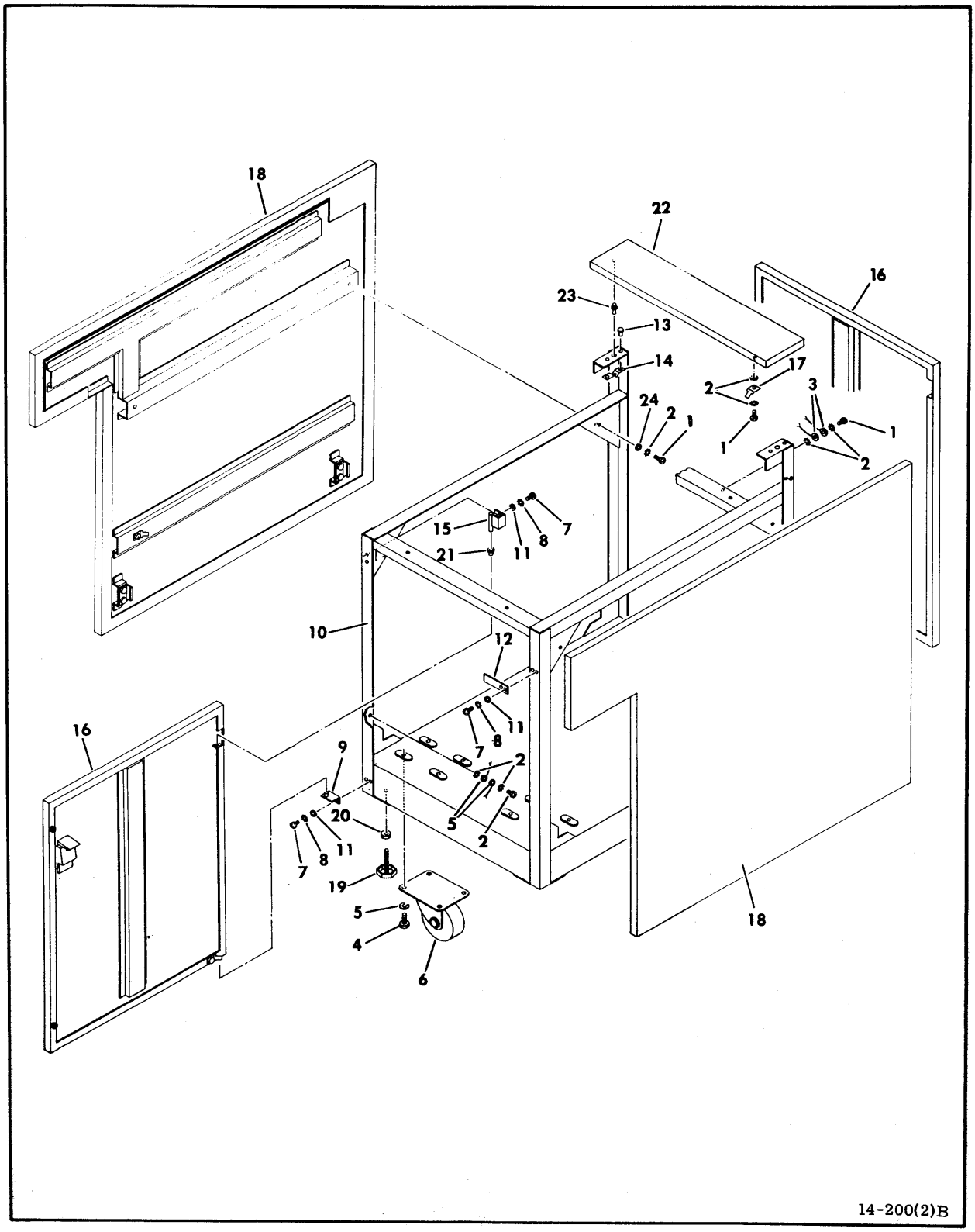

Figure 3-2. Final Assembly - Pedestal (Sheet 2)

INDEX NO	PART NO	PART DESCRIPTION	NOTE
3-2		FINAL ASSEMBLY, Pedestal (Sheet 2)	
	47308701	FRAME ASSEMBLY	
1	10127131	SCREW, 10-24 x 3/8, Pan Head Machine	
2	10126403	WASHER, #10 External Tooth Lock	
3	94369530	CABLE, Ground	
4	92151017	SCREW, Hex Head	
5	10125807	WASHER, 5/16 Spring Lock	
6	92703015	CASTER	
7	10127121	SCREW, 8-32 x 5/16 Pan Head Machine	
8	10126402	WASHER, #8 External Tooth Lock	
9	76418400	HINGE, Lower Door	
10	47297800	FRAME, Base	
11	10125606	WASHER, #8 Flat	
12	75074800	KEEPER, Latch	
13	16345307	PIVOT	
14	93325001	CATCH, Spring	
15	75074900	HINGE, Upper Door	
		- - - * - - -	
16		FRONT AND REAR DOOR, Nonacoustic (See Figure 3-16)	
17	94274140	TERMINAL, Quick Connect	
18		SIDE PANEL ASSEMBLY, Nonacoustic (See Figure 3-20)	
19	93697013	LEVELER	
20	10125303	NUT, 3/8 - 16 Hex	
21	93847001	BEARING, Flanged	
22	765160**	PANEL, Top	Used on all units except BK4A5C/D & BK5A5N/P
22	473133**	PANEL, Top	Used on BK4A5C/D & BK5A5N/P only
23	93326004	STUD, Ball	
24	10125607	WASHER, #10 Flat	

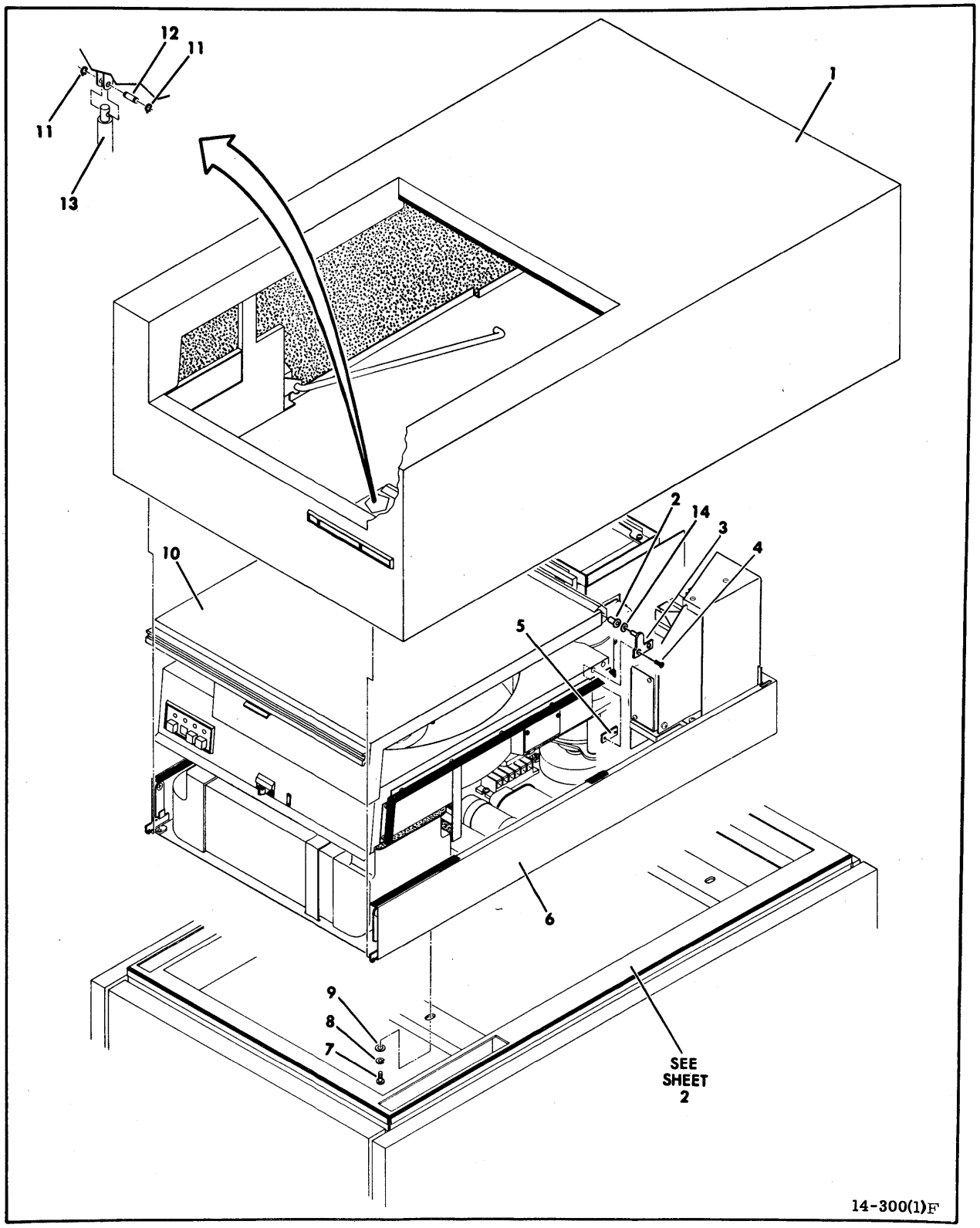

Figure 3-3. Final Assembly - Acoustic Cabinet (Sheet 1 of 3)

INDEX NO	PART NO	PART DESCRIPTION	NOTE
3-3		FINAL ASSEMBLY, Acoustic Cabinet (Sheet 1 of 3)	
1		CASE ASSEMBLY, Acoustic Cabinet (See Figure 3-9)	
2	76429600	BEARING, Flanged	
3	77560300	PIVOT, Cover Pin	Right Side
3	77560200	PIVOT, Cover Pin (Not Shown)	Left Side
4	92958206	SCREW, 8-32 x 7/16 Flat Head	
5	75173307	PLATE, Nut	Right Side
5	77560400	PLATE, Nut (Not Shown)	Left Side
6		DRIVE ELECTRONICS (See Figure 3-22)	
7	10127143	SCREW, 10-32 x 1/2 Pan Head Machine	
8	10125805	WASHER, #10 Spring Lock	
9	10125607	WASHER, #10 Flat	
10		PACK ACCESS COVER, Acoustic (See Figure 3-15)	
11	92033221	RING, Retaining	
12	75071700	PIN, Cover Pivot	
13		SPRING, Gas (See Deck Assembly Sheet 6, For Part Number)	
14	76419100	SPACER, Pack Cover	

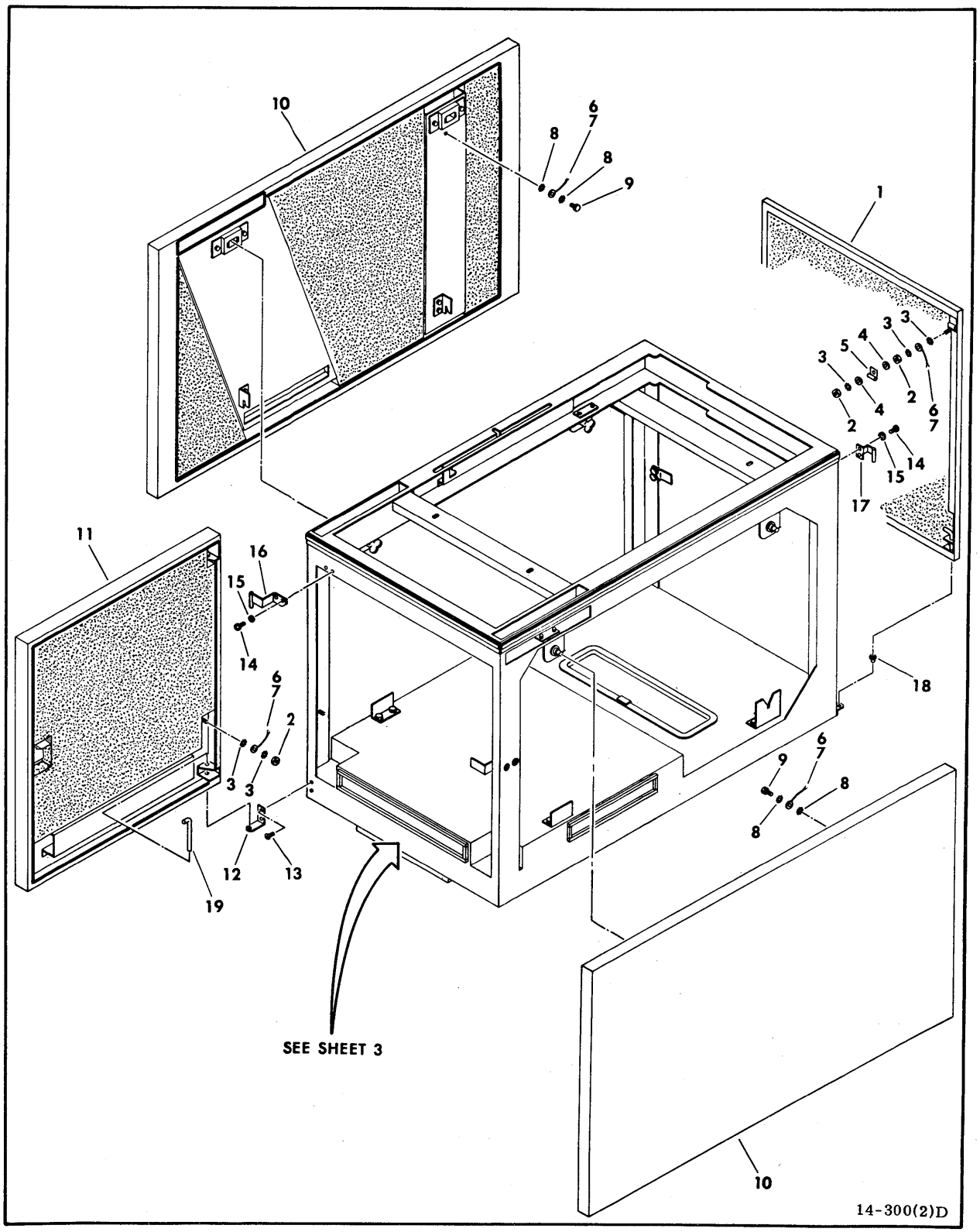

Figure 3-3. Final Assembly - Acoustic Cabinet (Sheet 2)

INDEX NO	PART NO	PART DESCRIPTION	NOTE
3-3		FINAL ASSEMBLY, Acoustic Cabinet (Sheet 2)	
1		REAR DOOR ASSEMBLY, Acoustic Cabinet (See Figure 3-18)	
2	10125106	NUT, 8-32 Hex	
3	10126402	WASHER, #8 External Tooth Lock	
4	10125606	WASHER, #8 Flat	
5	92602002	CLAMP, Nylon Cable	
6	94281494	CABLE, Ground	
7	94274105	TERMINAL, Quick Connect	
8	10126403	WASHER, #10 External Tooth Lock	
9	93592428	SCREW, 10-32 x 3/8 Hex Head	
10		SIDE PANEL ASSEMBLY, Acoustic (See Figure 3-21)	
11		FRONT DOOR ASSEMBLY, Acoustic (See Figure 3-17)	
	77563200	FRAME ASSEMBLY	S/C 21 W/O 55155B & Blw
	47291400	FRAME ASSEMBLY	S/C 21 W/55155B & Abv
12	77561600	HINGE, Lower Front Door	
13	10125747	SCREW, 10-32 x 1/2 Flat Head	
14	10127142	SCREW, 10-32 x 3/8 Pan Head Machine	
15	10126105	WASHER, #10 Internal Tooth Lock	
16	77561700	HINGE, Door	
17	76428300	HINGE, Top	
18	92373003	NYLINER, Snap In	
19	70948500	PIN, Hinge	

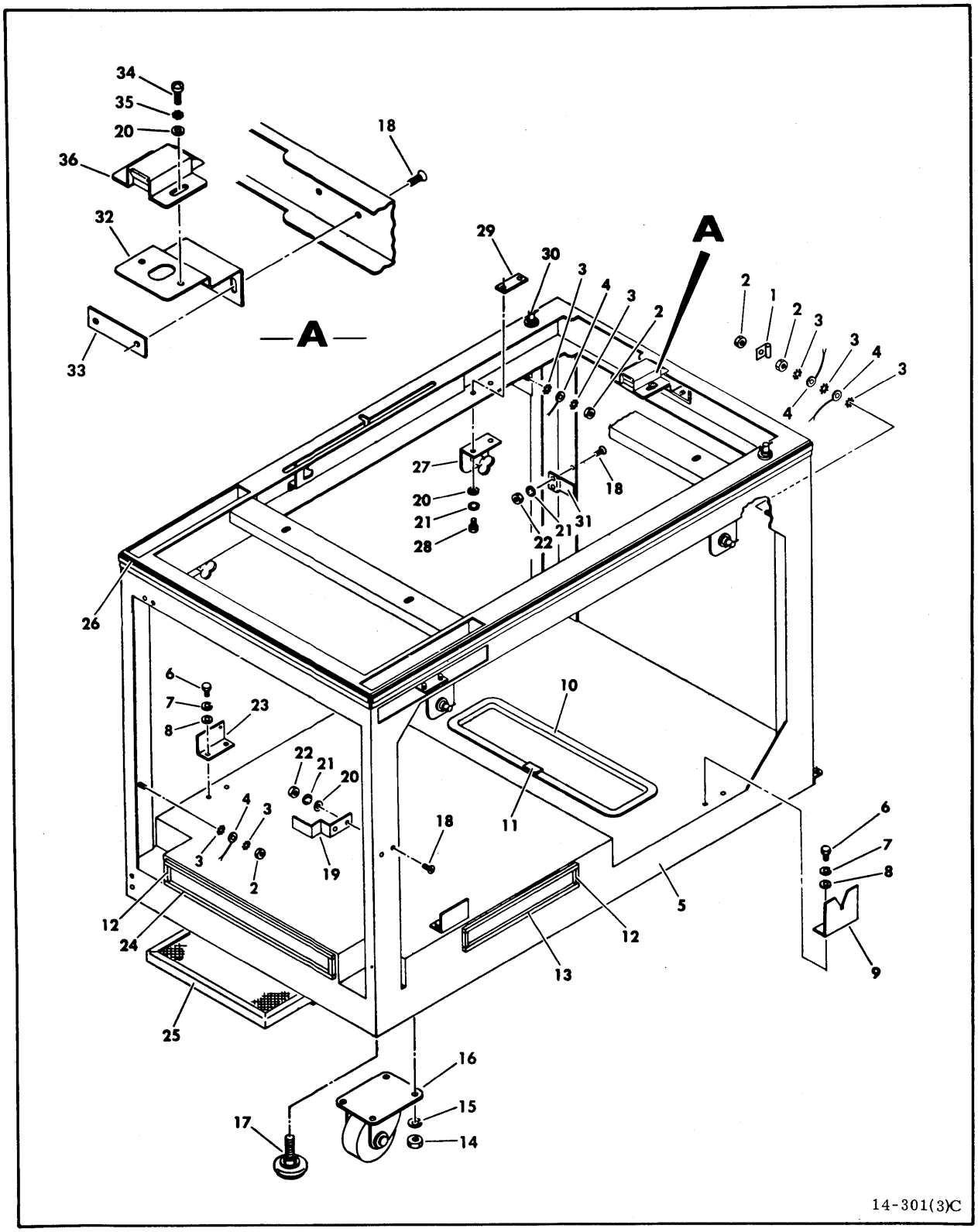

Figure 3-3. Final Assembly - Acoustic Cabinet (Sheet 3)

INDEX NO	PART NO	PART DESCRIPTION	NOTE
3-3		FINAL ASSEMBLY, Acoustic Cabinet (Sheet 3)	Unless Otherwise Noted All Parts And Assemblies Listed Here Are Common To Both The Acoustic Cabinet And The Acoustic Drawer.
		FRAME ASSEMBLY (See Sheet 2 for Additional Frame Information)	
1	92602002	CLAMP, Nylon Cable	
2	10125106	NUT, 8-32 Hex	
3	10126402	WASHER, #8 External Tooth Lock	
4	94281494	CABLE, Ground	
5	83285600	FRAME, Main	S/C 21 W/O 55155B & Blw
5	47291200	FRAME, Main	S/C 21 W/55155B & Abv
6	10126501	SCREW, 1/4-20 x 5/8 Hex Head	
7	10125806	WASHER, 1/4 Spring Lock	
8	10125608	WASHER, 1/4 Flat	
9	75007400	BRACKET, Side Panel	
10	94237703	TRIM, Black Safety	
11	41282100	CLIP, Safety Trim	
12	76429302	SEAL, Acoustical	
13	76429300	SEAL, Acoustical	
14	10125302	NUT, 5/16-18 Hex	
15	10125807	WASHER, 5/16 Spring Lock	
16	92703005	CASTER	
17	93697021	LEVELER	
18	10125747	SCREW, 10-32 x 1/2 Flat Head	
19	77561800	KEEPER, Latch	
20	10125607	WASHER, #10 Flat	
21	10126105	WASHER, #10 Internal Tooth Lock	
22	10125108	NUT, 10-32 Hex	
23	75007300	BRACKET, Panel	
24	76429301	SEAL, Acoustical	
25	##	FILTER, Aluminum	
26	93993001	EXTRUSION, Rubber	
27	40029500	BRACKET, Stud	
28	10125062	SCREW, 10-32 x 1/2 Hex Head	

INDEX NO	PART NO	PART DESCRIPTION	NOTE
3-3		FINAL ASSEMBLY, Acoustic (Contd)	
29	75031800	PLATE, Nut	
30	93573004	STUD ASSEMBLY (ATTACHING PARTS)	
	93571002	GROMMET	
	93572001	RING, Snap	
		- - - * - - -	
31	76428400	LATCH, Door	
32	73029700	BRACKET, Mounting Latch	S/C 21 S/55155B & Abv only
33	75173313	PLATE, Nut	S/C 21 W/55155B & Abv only
34	10127142	SCREW, 10-32 x 3/8 Pan Head Machine	S/C 21 W/55155B & Abv only
35	10126403	WASHER, #10 External Tooth Lock	S/C 21 W/55155B & Abv only
36	92008601	LATCH, Slide Bolt	S/C 21 W/55155B & Abv only
37	93573004	STUD ASSEMBLY, (Attaching Parts)	Used S/C 21 W/O 55155B & Blw only
	93571002	GROMMET	
	93572001	RING, Snap	
		- - - * - - -	

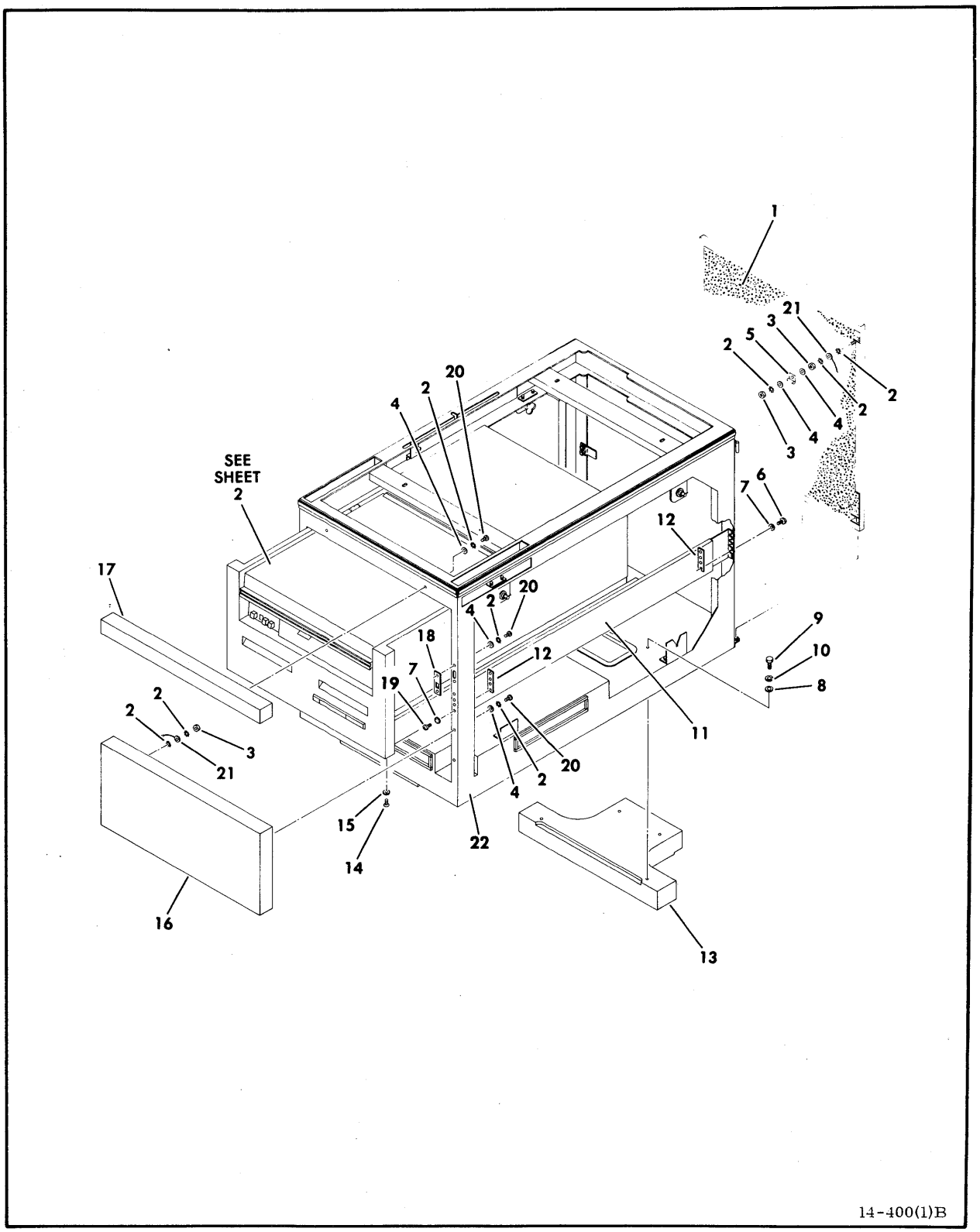

Figure 3-4. Final Assembly - Acoustic Drawer (Sheet 1 of 2)

INDEX NO	PART NO	PART DESCRIPTION	NOTE
3-4		FINAL ASSEMBLY, Acoustic Drawer (Sheet 1 of 2)	
1		REAR DOOR ASSEMBLY, Acoustic Drawer (See Figure 3-19)	
2	10126402	WASHER #8 External Tooth Lock	
3	10125106	NUT, 8-32 Hex	
4	10125606	WASHER, #8 Flat	
5	92602002	CLAMP, Nylon Cable	
6	10126244	SCREW, 10-32 x 3/8 Socket Hex Head	
7	10126105	WASHER, #10 Internal Tooth Lock	
8	10125608	WASHER, 1/4 Flat	
9	10126502	SCREW, 1/4-20 x 3/4 Hex Head	
10	10125806	WASHER, 1/4 Spring Lock	
11	94393001	SLIDE	Right Side
11	94393000	SLIDE (Not Shown)	Left Side
12		PLATE, Nut	Supplied As Part Of Slide
13	77563300	BALLAST	
14	10125746	SCREW, 10-32 x 3/8 Flat Head	
15	76422600	WASHER, Special	
16	775627**	PANEL, Lower Front	Used on all units except BK5C4C/D & BK5A7V/W
16	473292**	PANEL, Lower Front	
16	473292**	PANEL, Lower Front	Used on BK5C4C/D & BK5A7V/W only
17	764286**	PANEL, Upper Front	Used on all units except BK5C4C/D & BK5A7V/W
17	473262**	PANEL, Upper Front	Used on BK5C4C/D & BK5A7V/W only
	94386402	MOUNT, Cable	Secures A Cable on base of frame
	94386407	MOUNT, Cable	
	94277424	STRAP, Cable Tie	
	77523505	STRAP, Cable	
	82377300	CLAMP	
	93154110	TUBING, Heat Shrink	

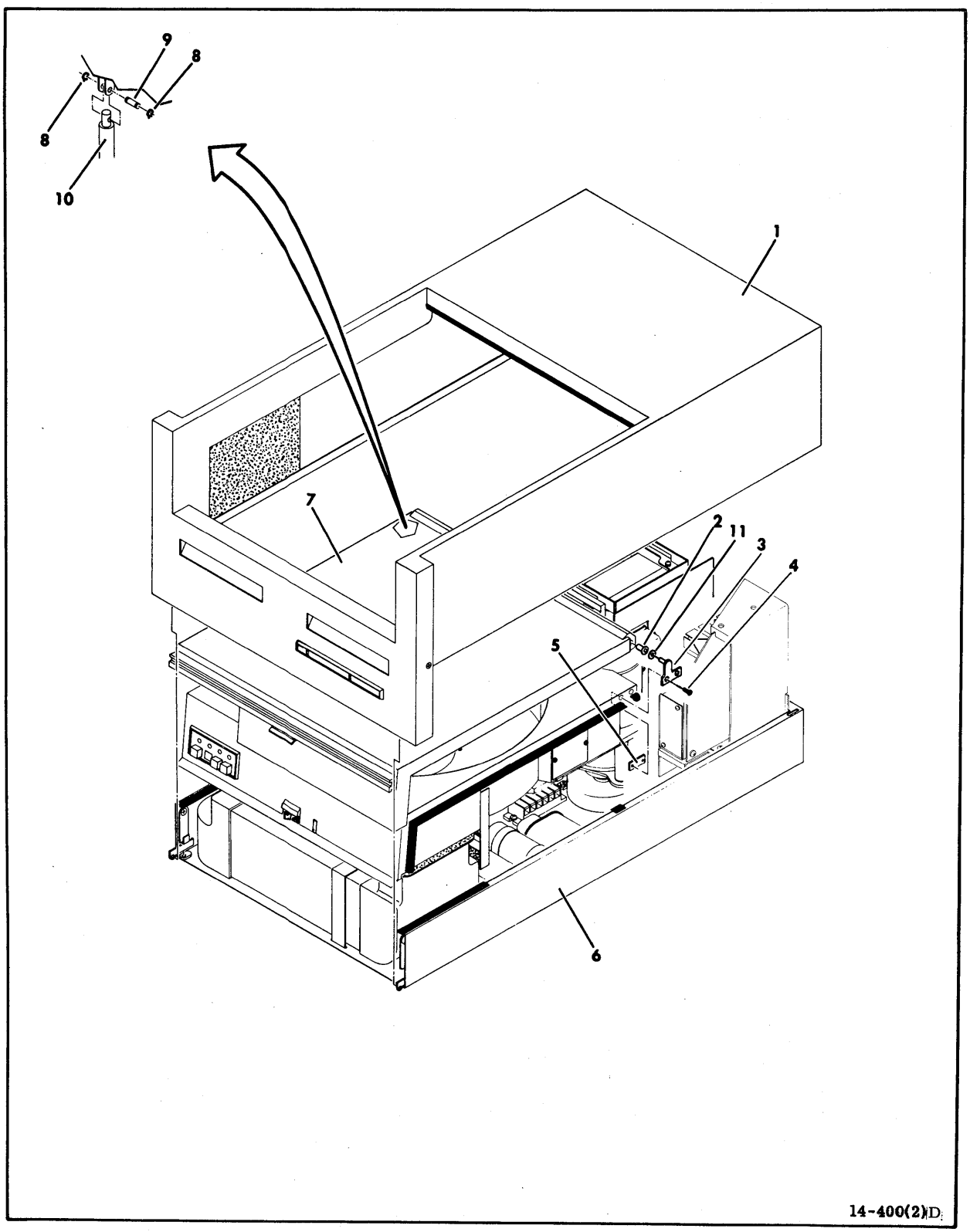

Figure 3-4. Final Assembly - Acoustic Drawer (Sheet 2)

INDEX NO	PART NO	PART DESCRIPTION	NOTE
3-4		FINAL ASSEMBLY, Acoustic Drawer (Sheet 2)	
1		CASE ASSEMBLY, Acoustic Drawer (See Figure 3-10)	
2	76429600	BEARING, Flanged	
3	77560300	PIVOT, Cover Pin	Right Side
3	77560200	PIVOT, Cover Pin (Not Shown)	Left Side
4	92958206	SCREW, 8-32 x 7/16 Flat Head	
5	77560400	PLATE, Nut	Right Side
5	75163307	PLATE, Nut (Not Shown)	Left Side
6		DRIVE ELECTRONICS (See Figure 3-22)	
7		PACK ACCESS COVER ASSEMBLY, Acoustic (See Figure 3-15)	
8	92033221	RING, Retaining	
9	75071700	PIN, Cover Pivot	
10		SPRING, Gas (See Deck Assembly Sheet 6, For Part Number)	
11	76419100	SPACER, Pack Cover	

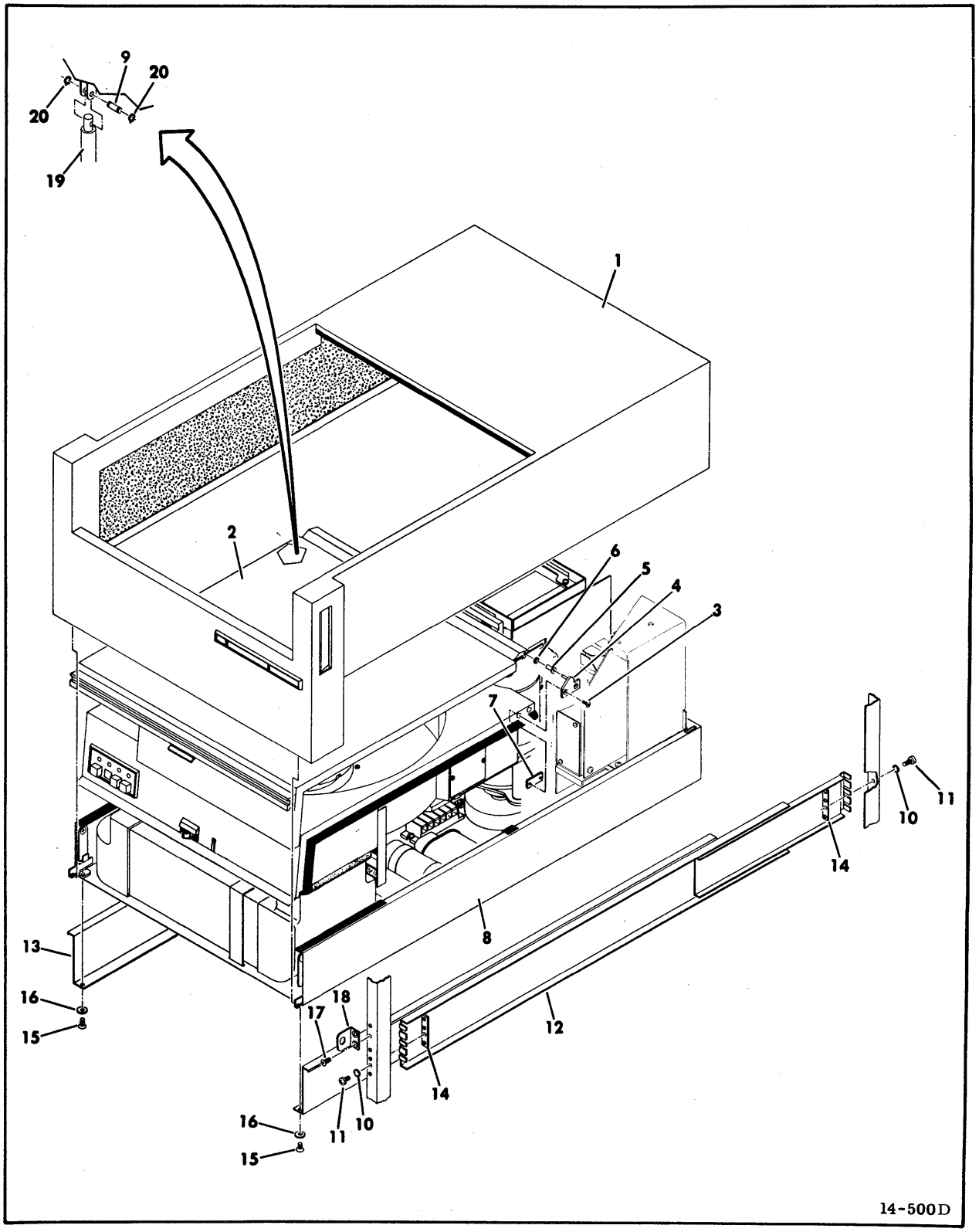

Figure 3-5. Final Assembly - 30 Inch Rack Mount

INDEX NO	PART NO	PART DESCRIPTION	NOTE
3-5		FINAL ASSEMBLY, 30 Inch Rack Mount	
1		CASE ASSEMBLY, 30 Inch Rack Mount (See Figure 3-11)	
2		PACK ACCESS COVER ASSEMBLY, Nonacoustic (See Figure 3-14)	
3	10125715	SCREW, 6-32 x 1/2 Flat Head	
4	75070000	HINGE, Pin	Right Side, S/C 32 & Blw
4	75050002	HINGE, Pin	Right Side, S/C 33 & Abv
4	75070001	HINGE, Pin (Not Shown)	Left Side, S/C 32 & Blw
4	75070003	HINGE, Pin (Not Shown)	Left Side, S/C 33 & Abv
5	41274008	BEARING, Flanged	S/C 32 & Blw
5	76429600	BUSHING, Pack Cover	S/C 33 & Abv
6	76419100	SPACER, Pack Cover	S/C 32 & Blw
6	75174202	WASHER, Slide	S/C 33 & Abv
7	75173306	PLATE, Nut	
8		DRIVE ELECTRONICS (See Figure 3-22)	
9	75071700	PIN, Cover Pivot	
	77569501	SLIDE ASSEMBLY	Not applicable when customer provides their own
10	10126105	WASHER, #10 Internal Tooth Lock	
11	10125062	SCREW, 10-32 x 3/8 Pan Head Machine	
12	94383601	SLIDE	Right Side
13	94383600	SLIDE	Left Side
14		PLATE, Nut	Supplied As Part Of Slide
15	10125746	SCREW, 10-32 x 3/8 Flat Head	
16	76422600	WASHER, Special	
17	10125931	SCREW, 10-32 x 7/16 Flat Head	
18	77564700	KEEPER, Latch	
19		SPRING, Gas (See Deck Assembly Sheet 6 For Part Number)	
20	92033221	RING, Retaining	

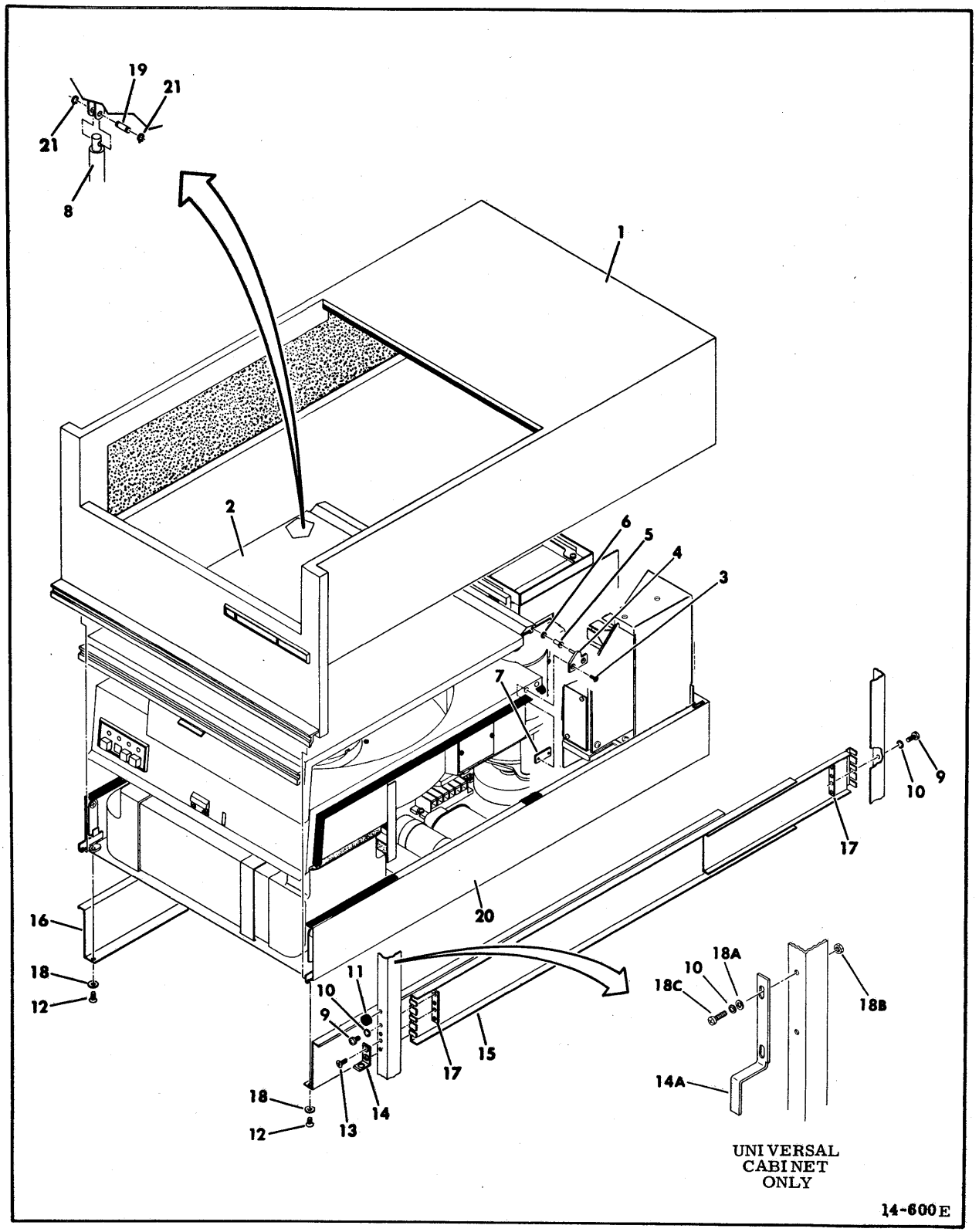

Figure 3-6. Final Assembly - 36 Inch Rack Mount

INDEX NO	PART NO	PART DESCRIPTION	NOTE
3-6		FINAL ASSEMBLY, 36 Inch Rack Mount	
3-6		FINAL ASSEMBLY, Universal Cabinet	
1		CASE ASSEMBLY, 36 Inch Rack Mount (See Figure 3-12)	
1		CASE ASSEMBLY, Universal Cabinet (See Figure 3-13)	
2		PACK ACCESS COVER ASSEMBLY, Nonacoustic/Universal (See Figure 3-14)	
3	10125715	SCREW, 6-32 x 1/2 Flat Head	
4	75070000	HINGE, Pin	Right Side, S/C 32 & Blw
4	75070002	HINGE, Pin	Right Side, S/C 33 & Abv
4	75070001	HINGE, Pin (Not Shown)	Left Side, S/C 32 & Blw
4	75070003	HINGE, Pin (Not Shown)	Left Side, S/C 33 & Abv
5	41274008	BEARING, Flanged	S/C 32 & Blw
5	76429600	BUSHING, Pack Cover	S/C 33 & Abv
6	76419100	SPACER, Pack Access Cover	S/C 32 & Blw
6	75174202	WASHER, Slide	S/C 33 & Abv
7	75173306	PLATE, Nut	S/C 32 & Blw
8		SPRING, Gas (See Deck Assembly, Sheet 6 for Part Number)	
	77569500	SLIDE ASSEMBLY	Used on all units except BK5A1G/H
	77569502	SLIDE ASSEMBLY	Used on BK5A1G/H only
9	10125062	SCREW, 10-32 x 1/2 Hex Head Machine	Used on all units except BK5A1G/H
9	10127142	SCREW, 10-32 x 3/8 Pan Head Machine	Used on BK5A1G/H only
10	10126105	WASHER, #10 Internal Tooth Lock	
11	92633003	BUMPER, Grommet	
12	10125746	SCREW, 10-32 x 3/8 Flat Head	
13	10125747	SCREW, 10-32 x 1/2 Flat Head	
14	76030900	KEEPER, Pin	

INDEX NO	PART NO	PART DESCRIPTION	NOTE
3-6		FINAL ASSEMBLY, 36 Inch Rack Mount (Contd)	
14A	73052000	KEEPER, Latch	Right side; used on BK5A1G/H only
14B	73052100	KEEPER, Latch (not shown)	Left side; used on BK5A1G/H only
15	94393001	SLIDE	Right Side
15	94383600	SLIDE	Left Side; used on BK5A1G/H only
16	94393000	SLIDE	Left Side
16	94383601	SLIDE	Right Side; used on BK5A1G/H only
	77569502	SLIDE ASSEMBLY	Used on BK5A1G/H only
17		PLATE, Nut	Supplied as Part Of Slide
18	76422600	WASHER, Special	
18A	10125607	WASHER, #10 Flat	Used on BK5A1G/H only
18B	10125108	NUT, 10-32 Hex	Used on BK5A1G/H only
18C	10127144	SCREW, 10-32 x 5/8 Pan Head Machine	Used on BK5A1G/H only
19	75071700	PIN, Cover Pivot	
20		DRIVE ELECTRONICS (See Figure 3-22)	
21	92033221	RING, Retaining	

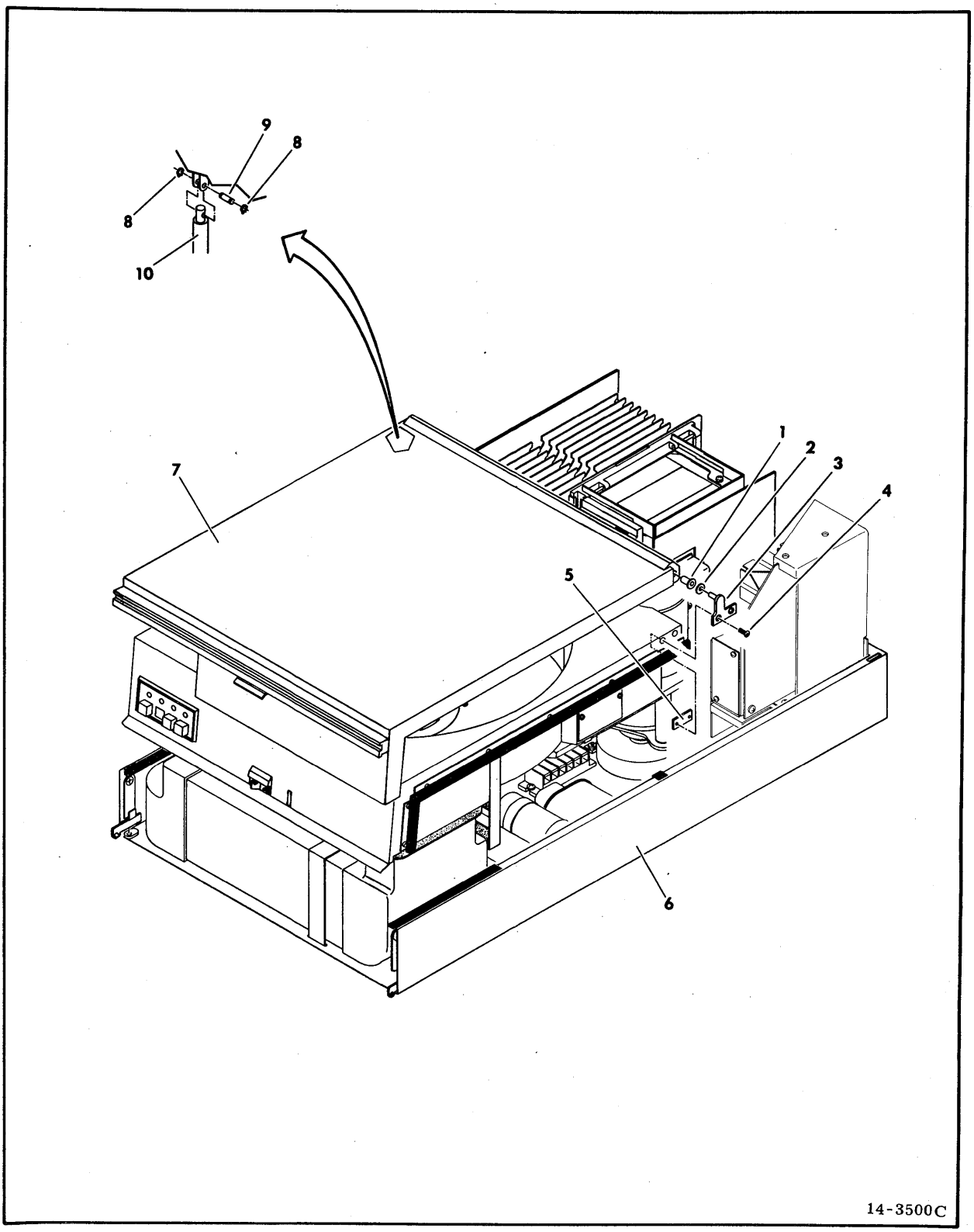

Figure 3-7. Final Assembly - Nude

INDEX NO	PART NO	PART DESCRIPTION	NOTE
3-7		FINAL ASSEMBLY, Nude	
1	76429600	BEARING, Flanged	
2	76419100	SPACER, Pack Cover	
3	77560300	PIVOT, Cover Pin	
3	77560200	PIVOT, Cover Pin (Not Shown)	
4	92958206	SCREW, 8-32 x 7/16 Flat Head Machine	
5	75173307	PLATE, Nut	
5	77560400	PLATE, Nut (Not Shown)	
6		DRIVE ELECTRONICS (See Figure 3-22)	
7		PACK ACCESS COVER, Acoustic (See Figure 3-15)	
8	92033221	RING, Retaining	
9	75071700	PIN, Cover Pivot	
10		SPRING, Gas (See Deck Assembly Sheet 6, For Part Number)	

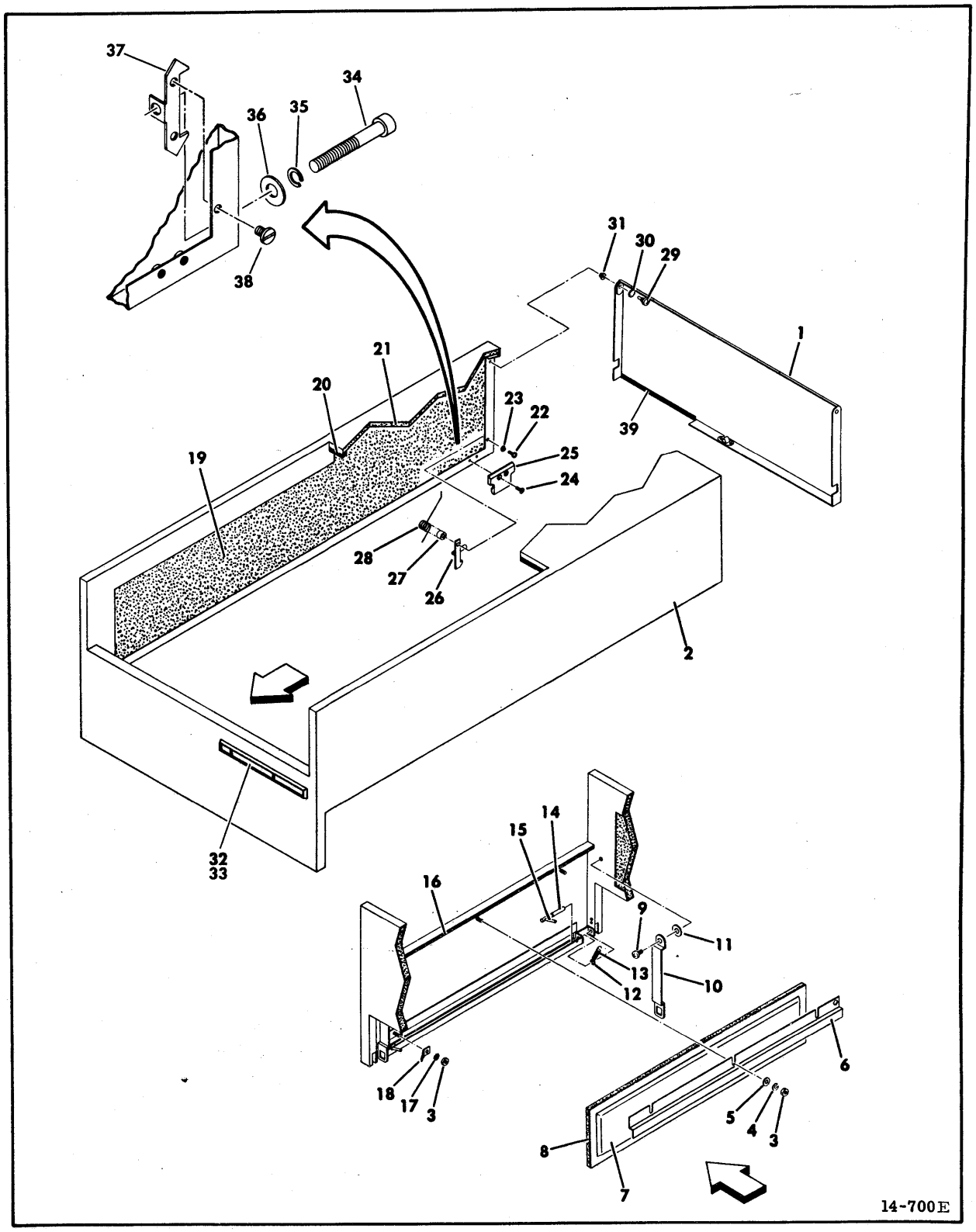

Figure 3-8. Case Assembly - Pedestal

INDEX NO	PART NO	PART DESCRIPTION	NOTE
3-8	472021**	CASE ASSEMBLY, Pedestal	S/C 21 W/O 55155B & Blw
3-8	472901**	CASE ASSEMBLY, Pedestal	S/C 21 W/55155B & Abv
1	471954**	DOOR, Case	Used on all units except BK4A5C/D & BK5A5N/P
1	473142**	DOOR, Case	Used only on BK4A5C/D & BK5A5N/P
2	474540**	CASE, Top	Used on all units except BK4A5C/D & BK5A5N/P
2	473135**	CASE, Top	Used only on BK4A5C/D & BK5A5N/P
3	10125106	NUT, 8-32 Hex	
4	10125804	WASHER, #8 Spring Lock	
5	10125606	WASHER, #8 Flat	
6	75257700	RETAINER, Filter	
7	##	FILTER, Air	
8	92628413	TAPE, Foam	
9	93826236	SCREW, 10-32 x 3/8 Self-Locking Pan Head	
10	76427601	ARM, Case Support	
11	75062400	WASHER, Insulator	
12	92033037	RING, Retaining	
13	46819300	SPRING, Extension	
14	75065200	PIN, Case Pivot	
15	93530021	PIN, Roll	
16	92628302	TAPE, Black Adhesive Back	
17	10126402	WASHER, #8 External Tooth Lock	
18	94274105	TERMINAL, Quick Connect	
19	75040479	PANEL, Acoustical Foam	Left Side, S/C 21 W/O 55155B & Blw
19	75040480	PANEL, Acoustical Foam (Not Shown)	Right Side, S/C 21 W/O 55155B & Blw
19	47291100	PANEL, Acoustical Foam	Left Side, S/C 21 W/55155B & Abv

INDEX NO	PART NO	PART DESCRIPTION	NOTE
3-8	472021**	CASE ASSEMBLY, Pedestal (Contd)	
19	47291101	PANEL, Acoustical Foam (Not Shown)	Right Side, S/C 21 W/55155B & Abv
20	76429332	SEAL, Acoustical	
21	75040426	PANEL, Acoustical Foam	
22	10127113	SCREW, 6-32 x 3/8 Pan Head Machine	
23	10126103	WASHER, #6 External Tooth Lock	
24	10125714	SCREW, 6-32 x 3/8 Flat Head	S/C 21 W/O 55155B & Blw
25	47198100	CLIP, Case	
26	47175200	LATCH, Case	Left Side, S/C 21 W/O 55155B & Blw
26	47175201	LATCH, Case (Not Shown)	Right Side, S/C 21 W/O 55155B & Blw
27	47195300	SPACER, Latch	S/C 21 W/O 55155B & Blw
28	47195500	SPRING, Torsion	S/C 21 W/O 55155B & Blw
29	75257301	SCREW, Modified	
30	10126105	WASHER, #10 Internal Tooth Lock	
31	92373001	NYLINER, Snap In	
32	15000601	EMBLEM, 97xxSMD Product Identification	The part numbers listed are for standard CDC emblems only.
33	94365001	EMBLEM, CDC Exterior Identification	
34	92097031	SCREW, 10-32 Nylon Socket Head	S/C 21 W/55155B & Abv
35	10125805	WASHER, #10 Lock Spring	S/C 21 W/55155B & Abv
36	10125607	WASHER, #10 Flat	S/C 21 W/55155B & Abv
37	82337200	LATCH, Case	S/C 21 W/55155B & Abv
38	93790156	SCREW, 6-32 x 3/16 Self Locking Pan Head Machine	S/C 21 W/55155B & Abv
39	94385500	GROMMET, Extruded	

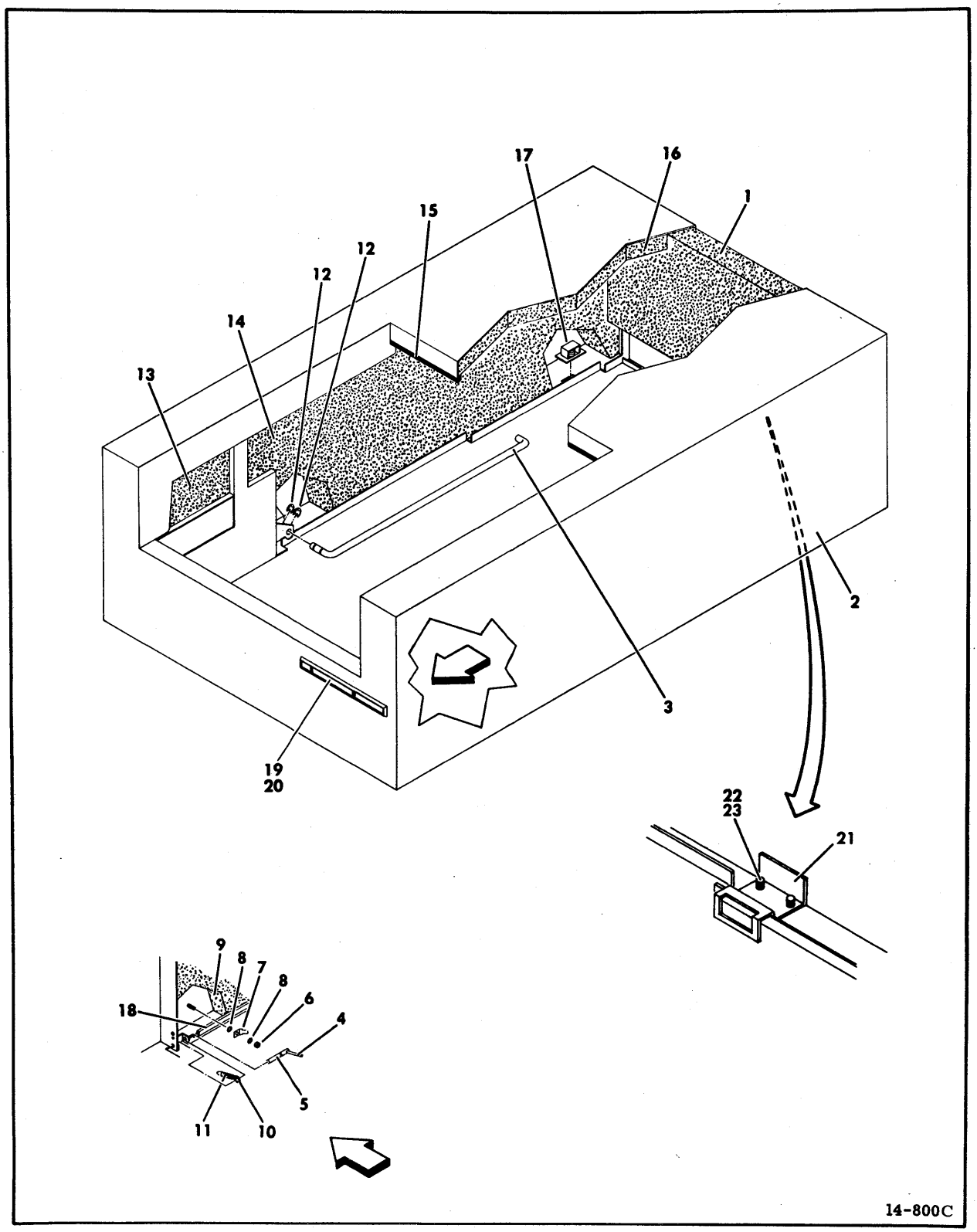

Figure 3-9. Case Assembly - Acoustic Cabinet

INDEX NO	PART NO	PART DESCRIPTION	NOTE
3-9	775628**	CASE ASSEMBLY, Acoustic Cabinet	S/C 21 W/O 55155B & Blw
3-9	472915**	CASE ASSEMBLY, Acoustic Cabinet	S/C 21 W/55155B &Abv
1	75040478	PANEL, Acoustical Foam	
2	474548**	CASE, Acoustical Top	S/C 21 W/O 55155B & Blw
2	472913**	CASE, Acoustical Top	S/C 21 W/55155B & Abv Used on all units except BK4A9E/F/G, BK5A7V/W, BK5C4C/D/E/F/R&S
2	473318**	CASE, Acoustical Top	Used on BK4A9E/F/G, BK5A7V/W, BK5C4C/D/E/F/R&S
3	77561000	SUPPORT, Rod	
4	93530021	PIN, Roll	
5	75065200	PIN, Pivot Case	
6	10125106	NUT, 8-32 Hex	
7	94274105	TERMINAL, Quick Connect	Used on all units except BK5A9T
8	10126402	WASHER, #8 External Tooth Lock	Used on all units except BK5A9T
9	75040450	PANEL, Acoustical Foam	
10	92033037	RING, Retaining	
11	46819300	SPRING, Extension	
12	92033087	RING, Retaining	
13	75040451	PANEL, Acoustical Foam	
14	75040448	PANEL, Acoustical Foam	Left Side
14	75040449	PANEL, Acoustical Foam (Not Shown)	Right Side

INDEX NO	PART NO	PART DESCRIPTION	NOTE
3-9	775628**	CASE ASSEMBLY, Acoustic Cabinet (Contd)	
15	76429320	SEAL, Acoustical	
16	75040474	PANEL, Acoustical Foam	
17	94303500	RECEPTACLE, Clip In	S/C 21 W/O 55155B & Abv only
18	76429322	SEAL, Acoustical	
19	15000601	EMBLEM, 97xxSMD Product Identification	The part numbers listed are for standard CDC emblems only.
20	94365000	EMBLEM, CDC Exterior Identification	
21	73029800	KEEPER, Latch	S/C 21 W/55155B & Abv only
22	10126105	WASHER, #10 Internal Tooth Lock	S/C 21 W/55155B & Abv only
23	10127141	SCREW, 10-32 x 5/16 Pan Head Machine	S/C 21 W/55155B & Abv only
24	10125804	WASHER, #8 Spring Lock	Used on BK5A9T only

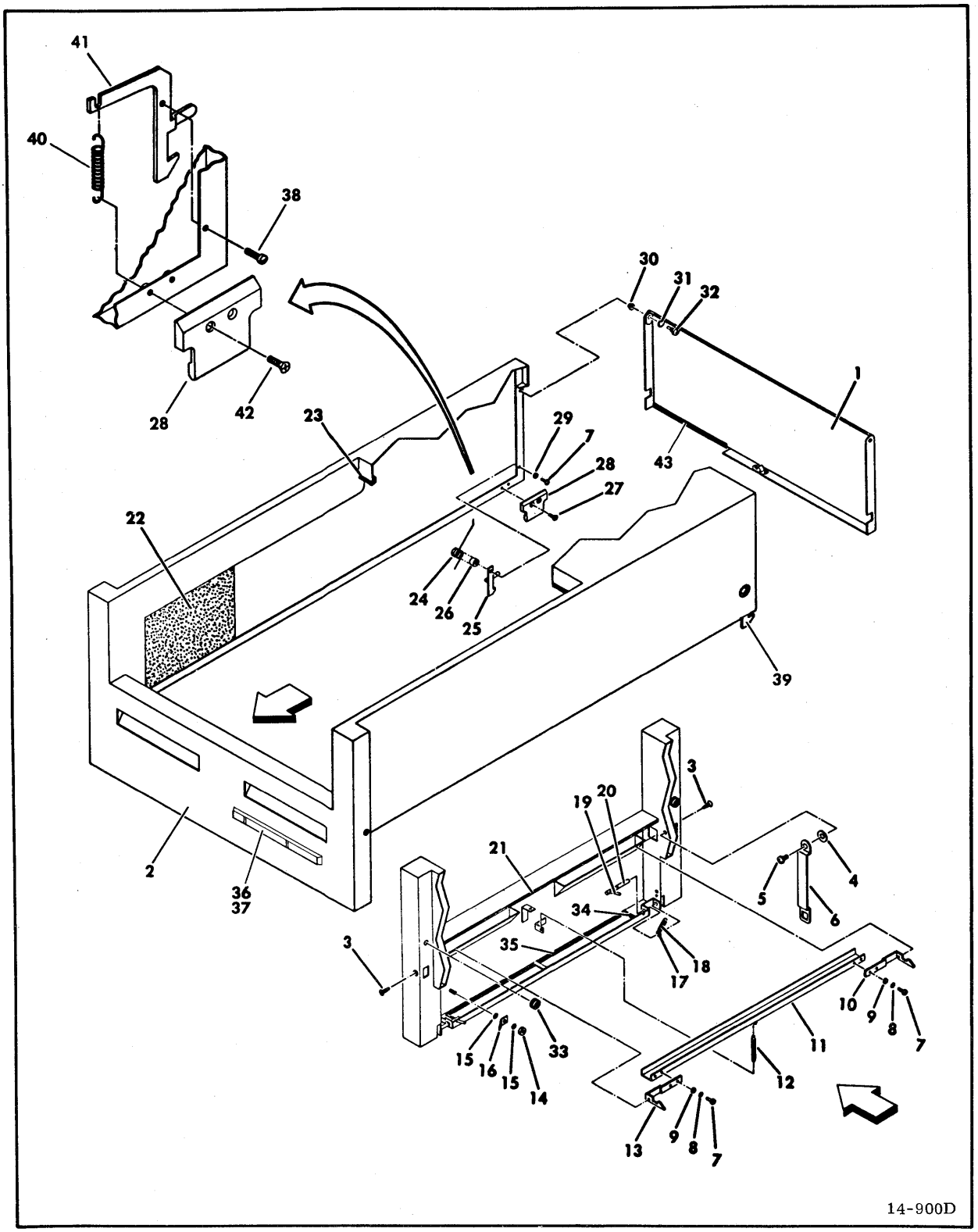

Figure 3-10. Case Assembly - Acoustic Drawer

INDEX NO	PART NO	PART DESCRIPTION	NOTE
3-10	472022**	CASE ASSEMBLY, Acoustic Drawer	S/C 21 W/O 55155B & Blw Used for color codes A thru AT only
3-10	472904**	CASE ASSEMBLY, Acoustic Drawer	S/C 21 W/55155B & Abv Used for color codes AU & Abv only
1	471954**	DOOR, Case	Used on all units except BK5C4C/D & BK5A7V/W
1	473142**	DOOR, Case	Used on BK5C4C/D & BK5A7V/W only
2	474510**	CASE, Acoustical	S/C 21 W/O 55155B Blw
2	472907**	CASE, Acoustical	S/C 21 W/55155B & Abv; Used on all units except BK5C4C/D & BK5A7V/W
2	473220**	CASE, Acoustical	Used on BK5C4C/D & BK5A7V/W only
3	76427900	SCREW, Modified	
4	75062400	WASHER, Insulator	
5	93826236	SCREW, 10-32 x 3/8 Self-Locking Pan Head	
6	76427601	ARM, Case Support	
7	10127113	SCREW, 6-32 x 3/8 Pan Head Machine	
8	10126401	WASHER, #6 External Tooth Lock	
9	10125605	WASHER, #6 Flat	
10	76428000	LATCH, Rack Mount	
11	76428201	ACTUATOR, Latch	
12	40063200	SPRING, Extension	
13	76428001	LATCH, Rack Mount	
14	10125106	NUT, 8-32 Hex	
15	10126402	WASHER, #8 External Tooth Lock	
16	94274105	TERMINAL, Quick Connect	
17	92033037	RING, Retaining	
18	46819300	SPRING, Extension	
19	93530021	PIN, Roll	
20	75065200	PIN, Case Pivot	

INDEX NO	PART NO	PART DESCRIPTION	NOTE
3-10	472022**	CASE ASSEMBLY, Acoustic Drawer (Contd)	
21	92628302	TAPE, Black Adhesive Back	
22	75040498	PANEL, Acoustical Foam	
23	76429320	SEAL, Acoustical	
24	47195500	SPRING, Torsion	S/C 21 W/O 55155B & Blw only
25	47175200	LATCH, Case	Left Side, S/C 21 W/O 55155B & Blw only
25	47175201	LATCH, Case (Not Shown)	Right Side, S/C 21 W/O 55155B & Blw only
26	47195300	SPACER, Latch	S/C 21 W/O 55155B & Blw only
27	10125714	SCREW, 6-32 x 3/8 Flat Head	S/C 21 W/O 55155B & Blw only
28	47198100	CLIP, Case	
29	10126103	WASHER, #6 Internal Tooth Lock	
30	92373001	NYLINER, Snap In	
31	10126105	WASHER, #10 Internal Tooth Lock	
32	75257301	SCREW, Modified	
33	92633021	BUMPER, Grommet	
34	76429310	SEAL, Acoustical	
35	76429309	SEAL, Acoustical	
36	15000601	EMBLEM, 97xx SMD Product Identification	The part numbers listed are for standard CDC emblems only.
37	94365001	EMBLEM, CDC Exterior Identification	
38	93790156	SCREW, 6-32 x 3/16 Self-Locking Machine	S/C 21 W/55155B & Abv only
39	73029200	LATCH, Right Side Case	S/C 21 W/55155B & Abv only
40	94204001	SPRING, Extension	S/C 21 W/55155B & Abv only
41	73029300	LATCH, Left Side Case	S/C 21 W/55155B & Abv only
42	10125716	SCREW, 6-32 x 5/8 Flat Head	S/C 21 W/55155B
43	94385500	GROMMET, Extruded	

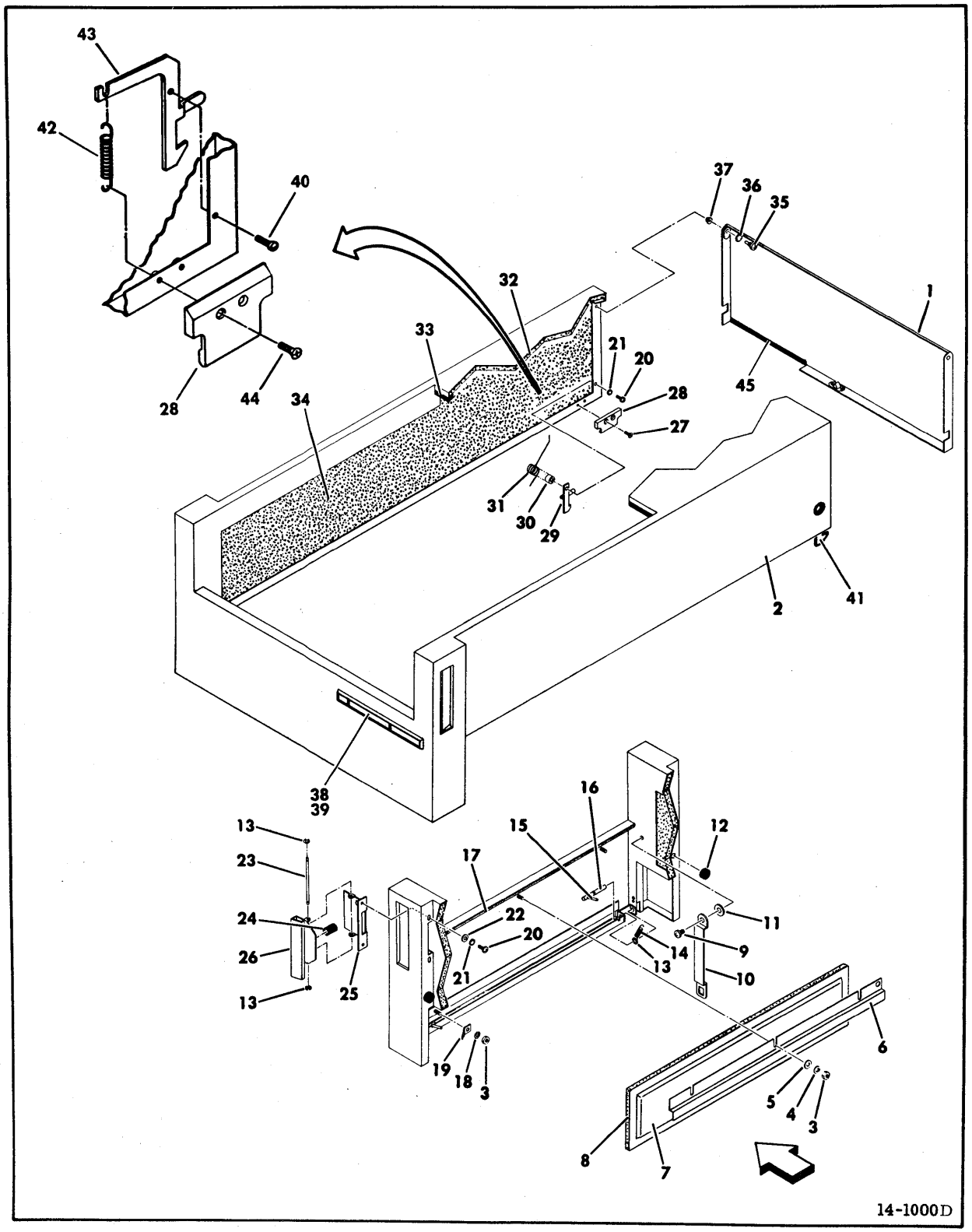

Figure 3-11. Case Asembly - 30 Inch Rack Mount

INDEX NO	PART NO	PART DESCRIPTION	NOTE
3-11	775663**	CASE ASSEMBLY, 30 Inch Rack Mount	S/C 21 W/O 55155B & Blw
3-11	472903**	CASE ASSEMBLY, 30 Inch Rack Mount	S/C 21 W/55155B & Abv
1	471954**	DOOR, Case	
2	474541**	CASE, Mount Rack	S/C 21 W/O 55155B & Blw
2	472906**	CASE, Mount Rack	S/C 21 W/55155B & Abv
3	10125106	NUT, 8-32 Hex	
4	10125804	WASHER, #8 Spring Lock	
5	10125606	WASHER, #8 Flat	
6	75257700	RETAINER, Filter	
7	##	FILTER, Air	
8	92628413	TAPE, Foam	
9	93826236	SCREW, 10-32 x 3/8 Self-Locking Pan Head	
10	76427601	ARM, Case Support	
11	75062400	WASHER, Insulator	
12	92633021	BUMPER, Grommet	
13	92033237	RING, Retaining	
14	46819300	SPRING, Extension	
15	93530021	PIN, Roll	
16	75065200	PIN, Case Pivot	
17	92628302	TAPE, Black Adhesive Backed	
18	10126402	WASHER, #8 External Tooth Lock	
19	94274105	TERMINAL, Quick Connect	
20	10127113	SCREW, 6-32 x 3/8 Pan Head Machine	
21	10126103	WASHER, #6 Internal Tooth Lock	
21A	10126103	WASHER, #6 Internal Tooth Lock	
22	10125605	WASHER, #6 Flat	
23	77564800	PIN, Latch	
24	94205791	SPRING, Compression	
25	77564900	BASE, Latch	
26	77565003	ARM, Latch	Used on all units except BK5A1K
26	77565001	ARM, Latch	Used on BK5A1K only
27	10125714	SCREW, 6-32 x 3/8 Flat Head	S/C W/O 55155B & Blw only
28	49718100	CLIP, Case	

INDEX NO	PART NO	PART DESCRIPTION	NOTE
3-11	775663**	CASE ASSEMBLY, 30 Inch Rack Mount (Contd)	
29	47175200	LATCH, Case	Left Side, S/C 21 W/O 55155B & Blw only
29	47175201	LATCH, Case (Not Shown)	Right Side, S/C 21 W/O 55155B & Blw only
30	47195300	SPACER, Latch	S/C 21 W/O 55155B & Blw only
31	47195500	SPRING, Torsion	S/C 21 W/O 55155B & Blw only
32	75040426	PANEL, Acoustical Foam	
33	76429332	SEAL, Acoustical	
34	75040480	PANEL, Acoustical Foam	Left Side, S/C 21 W/O 55155B & Blw
34	47291101	PANEL, Acoustical Foam	Left Side, S/C 21 W/O 55155B & Blw
34	75040479	PANEL, Acoustical Foam (Not Shown)	Right Side, S/C 21 W/O 55155B & Blw
34	47291100	PANEL, Acoustical Foam	Right Side, S/C 21 W/O 55155B & Blw
35	75257301	SCREW, Modified	
36	10126105	WASHER, #10 Internal Tooth Lock	
37	92373001	NYLINER, Snap In	
38	15000601	EMBLEM, 97xxSMD Product Identification	The part numbers listed are for standard CDC emblems only.
39	94365001	EMBLEM, CDC Exterior Identification	
40	93790156	SCREW,6-32 Self-Locking Machine	S/C 21 W/55155B & Abv only
41	73029200	LATCH, Right Side Case	S/C 21 W/55155B & Abv only
42	94204001	SPRING, Extension	S/C 21 W/55155B & Abv only
43	73029300	LATCH, Left Side Case	S/C 21 W/55155B & Abv only
44	10125716	SCREW, 6-32 x 5/8 Flat Head	S/C 21 W/55155B & Abv only
45	94385500	GROMMET, EXTENDED	

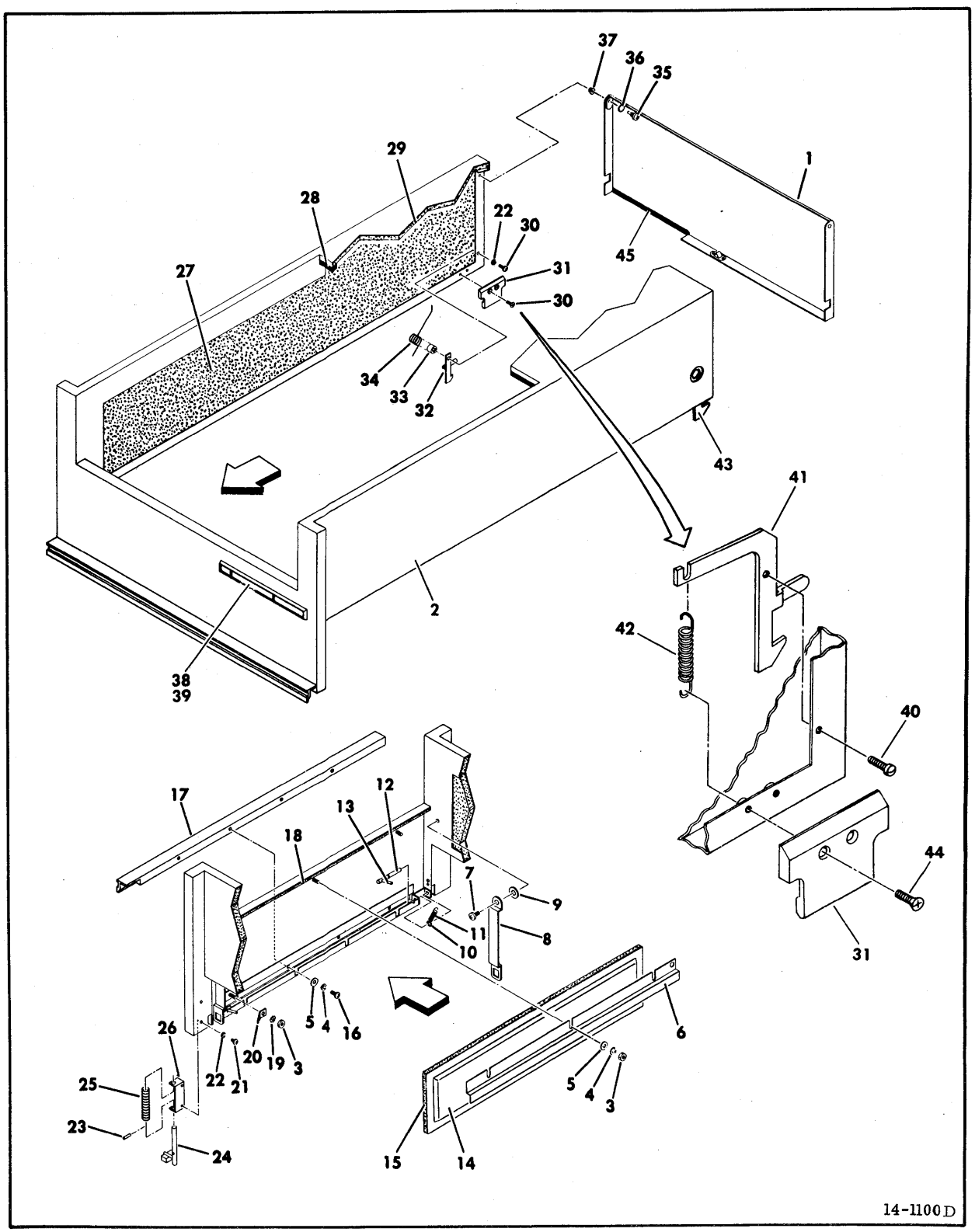

Figure 3-12. Case Assembly - 36 Inch Rack Mount

INDEX NO	PART NO	PART DESCRIPTION	NOTE
3-12	472020**	CASE ASSEMBLY, 36 Inch Rack Mount	S/C 21 W/O 55155B & Blw
3-12	472902**	CASE ASSEMBLY, 36 Inch Rack Mount	S/C 21 W/55155B & Abv
1	471954**	DOOR, Case	
2	832859**	CASE, Rack Mount	S/C 21 W/O 55155B & Blw
2	472905**	CASE, Rack Mount	S/C 21 W/55155B & Abv
3	10125106	NUT, 8-32 Hex	
4	10125804	WASHER, #8 Spring Lock	
5	10125606	WASHER, #8 Flat	
6	75257700	RETAINER, Filter	
7	93826236	SCREW, 10-32 x 5/16 Self-Locking Pan Head	
8	76427601	ARM, Case Support	
9	75062400	WASHER, Insulator	
10	92033037	RING, Retaining	
11	46819300	SPRING, Extension	
12	75065200	PIN, Case Pivot	
13	93530021	PIN, Roll	
14	##	FILTER, Air	
15	92628413	TAPE, Foam	
16	10127122	SCREW, 8-32 x 3/8 Pan Head Machine	
17	76030400	HANDLE, Rack Mount	
18	92628302	TAPE, Black Adhesive Backed	
19	10126402	WASHER, #8 External Tooth Lock	
20	94274105	TERMINAL, Quick Connect	
21	10127331	SCREW, 6-32 x 3/16 Pan Head Machine	
22	10125803	WASHER, #6 Spring Lock	
22A	10125803	WASHER, #6 Spring Lock	S/C 21 W/O 55155B & Blw only
23	93530083	PIN, Roll	
24	76417500	PIN, Latch	
25	76417600	SPRING, Compression	
26	76030600	GUIDE, Pin	
27	75040480	PANEL, Acoustical Foam	Left Side, S/C 21 W/O 55155B & Blw
27	47291101	PANEL, Acoustical Foam	Left Side, S/C 21 W/55155B & Abv

INDEX NO	PART NO	PART DESCRIPTION	NOTE
3-12	472020**	CASE ASSEMBLY, 36 Inch Rack Mount (Contd)	
27	75040479	PANEL, Acoustical Foam (Not Shown)	Right Side, S/C 21 W/O 55155B & Blw
27	47291100	PANEL, Acoustical Foam (Not Shown)	Right Side, S/C 21 W/55155B & Abv
28	76429332	SEAL, Acoustical	
29	75040426	PANEL, Acoustical Foam	
30	10125714	SCREW, 6-32 x 3/8 Pan Head Machine	S/C 21 W/O 55155B & Blw only
31	47198100	CLIP, Case	
32	47175200	LATCH, Case	Left Side, S/C 21 W/O 55155B & Blw only
32	47175201	LATCH, Case (Not Shown)	Right Side, S/C 21 W/O 55155B & Blw only
33	47195300	SPACER, Latch	S/C 21 W/O 55155B & Blw only
34	47195500	SPRING, Torsion	S/C 21 W/O 55155B & Blw only
35	75257301	SCREW, Modified	
36	10126105	WASHER, #10 Internal Tooth Lock	
37	92373001	NYLINER, Snap In	
38	15000601	EMBLEM, 97xxSMD Product Identification	The part numbers listed are for standard CDC emblems only
39	94365001	EMBLEM, CDC Exterior Identification	
40	93790156	SCREW, 6-32 x 3/16 Self-Locking Machine	S/C 21 W/55155B & Abv only
41	73079200	LATCH, Right Side Case	S/C 21 W/55155B & Abv only
42	94204001	SPRING, Extension	S/C 21 W/55155B & Abv only
43	73029300	LATCH, Left Side Case	S/C 21 W/55155B & Abv only
44	10125716	SCREW, 6-32 x 5/8 Flat Head	S/C 21 W/55155B & Abv only
45	94385500	GROMMET, Extruded	

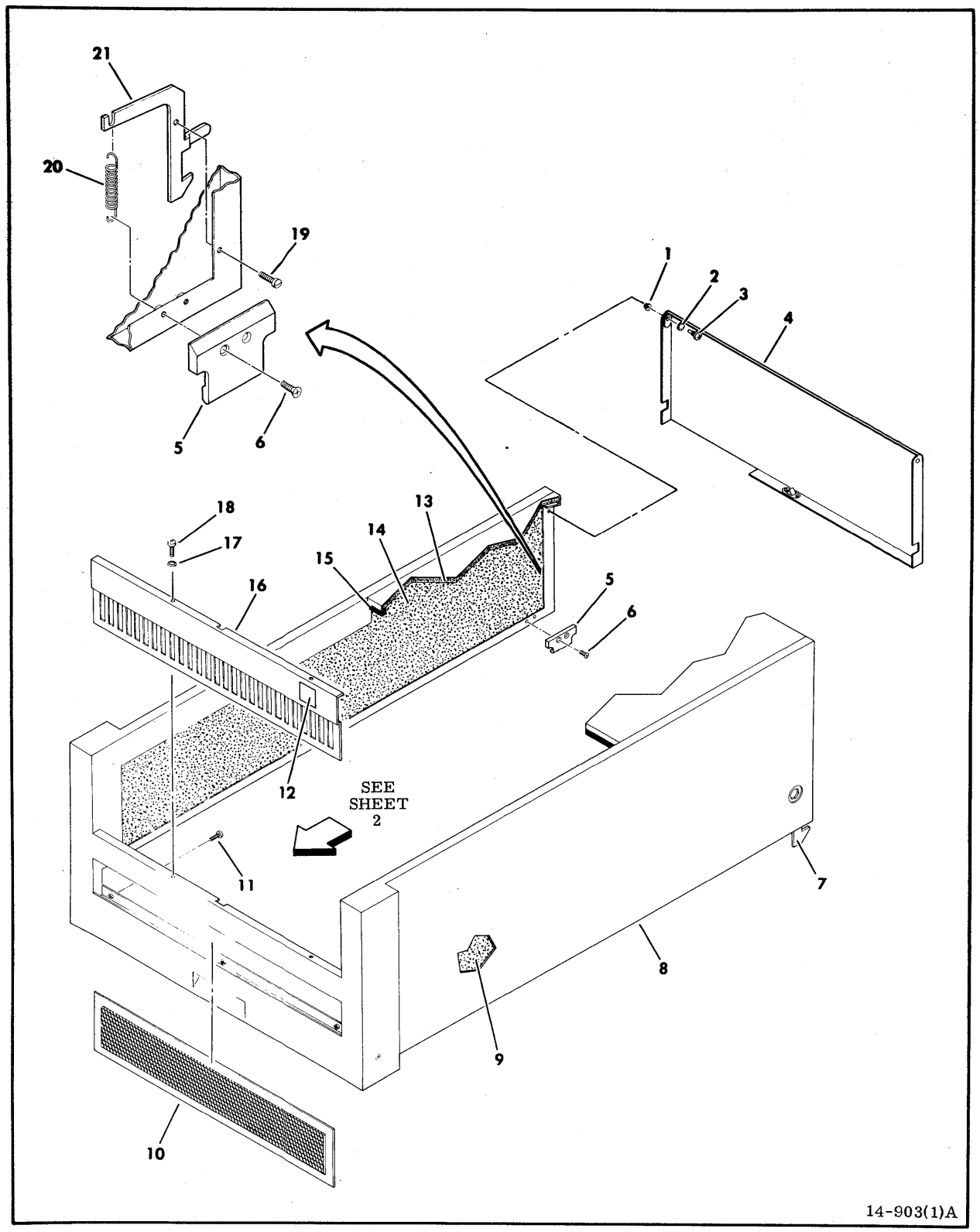

Figure 3-13. Case Assembly - Universal (Sheet 1 of 2)

INDEX NO	PART NO	PART DESCRIPTION	NOTE
3-13	751659**	CASE ASSEMBLY, Universal (Sheet 1 of 2)	
1	92373001	NYLINER, Snap In	
2	10126105	WASHER, #10 Internal Tooth Lock	
3	75257301	SCREW, Modified	
4	47195403	DOOR, Case	
5	47198100	CLIP, Case	
6	10125716	SCREW, 6-32 x 5/8 Cross Recessed Flat Head	
7	73029200	LATCH, Right Rack Case	
8	73051603	CASE, Universal Cabinet	
9	47291100	PANEL, Acoustical Foam	
10	94364903	FILTER, Aluminum Washable Air	
11	10127123	SCREW, 8-32 x 1/2 Pan Head Machine	
12	94397016	EMBLEM, Product Identification	
13	75040426	PANEL, Acoustical Foam	
14	47291101	PANEL, Acoustical Foam	
15	76429332	SEAL, Acoustical	
16	73051719	PANEL, Front Case	
17	10126103	WASHER, #6 Internal Tooth Lock	
18	93725143	SCREW, Phillips Truss Head Machine	
19	93790156	SCREW, Selflocking Pan Head Machine	
20	94204001	SPRING, Extension	
21	73029300	LATCH, Left Rack Case	

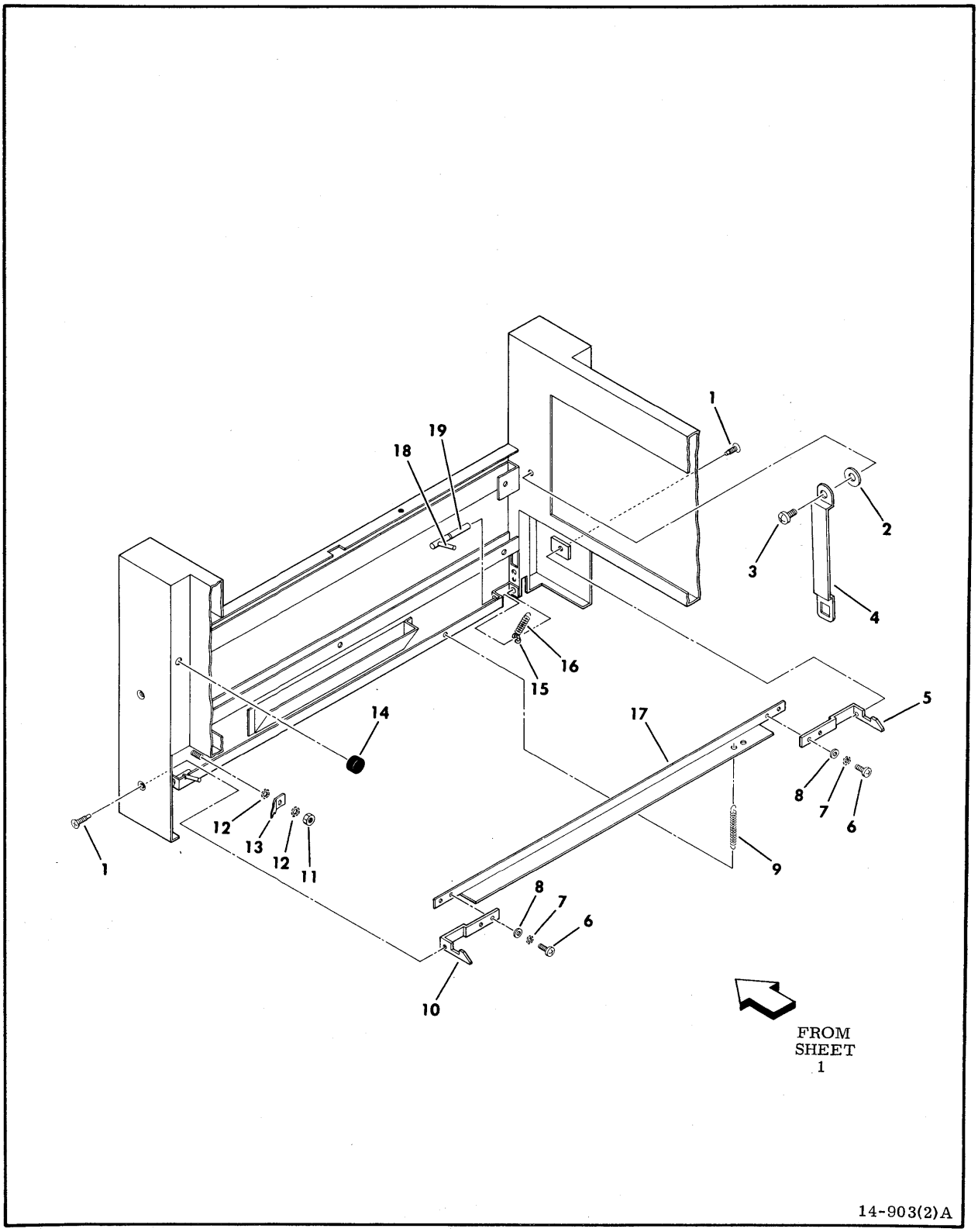

Figure 3-13. Case Assembly - Universal (Sheet 2)

INDEX NO	PART NO	PART DESCRIPTION	NOTE
3-13		CASE ASSEMBLY, Universal (Sheet 2)	
1	76427900	SCREW, Modified Cross Threaded	
2	75062400	WASHER, Insulator	
3	93826236	SCREW, 10-32 x 5/16 Pan Head Machine	
4	76427601	ARM, Case Support	
5	73051800	LATCH, Left	
6	10127113	SCREW, 6-32 x 1/2 Pan Head Machine	
7	10126401	WASHER, #6 External Tooth Lock	
8	10125605	WASHER, #6 Flat	
9	40063202	SPRING, Extension	
10	73051900	LATCH, Right	
11	10125106	NUT, 8-32 Hexagon Machine	
12	10126402	WASHER, #8 External Lock	
13	94274105	TERMINAL, Quick Connect	
14	92633021	BUMPER, Grommet Type	
15	92033037	RING, Retaining	
16	46819300	SPRING, Extension	
17	73052200	LATCH, Actuator	
18	93530021	PIN, 0.75 x 0.062 Roll	
19	75065200	PIN, Case Pivot	

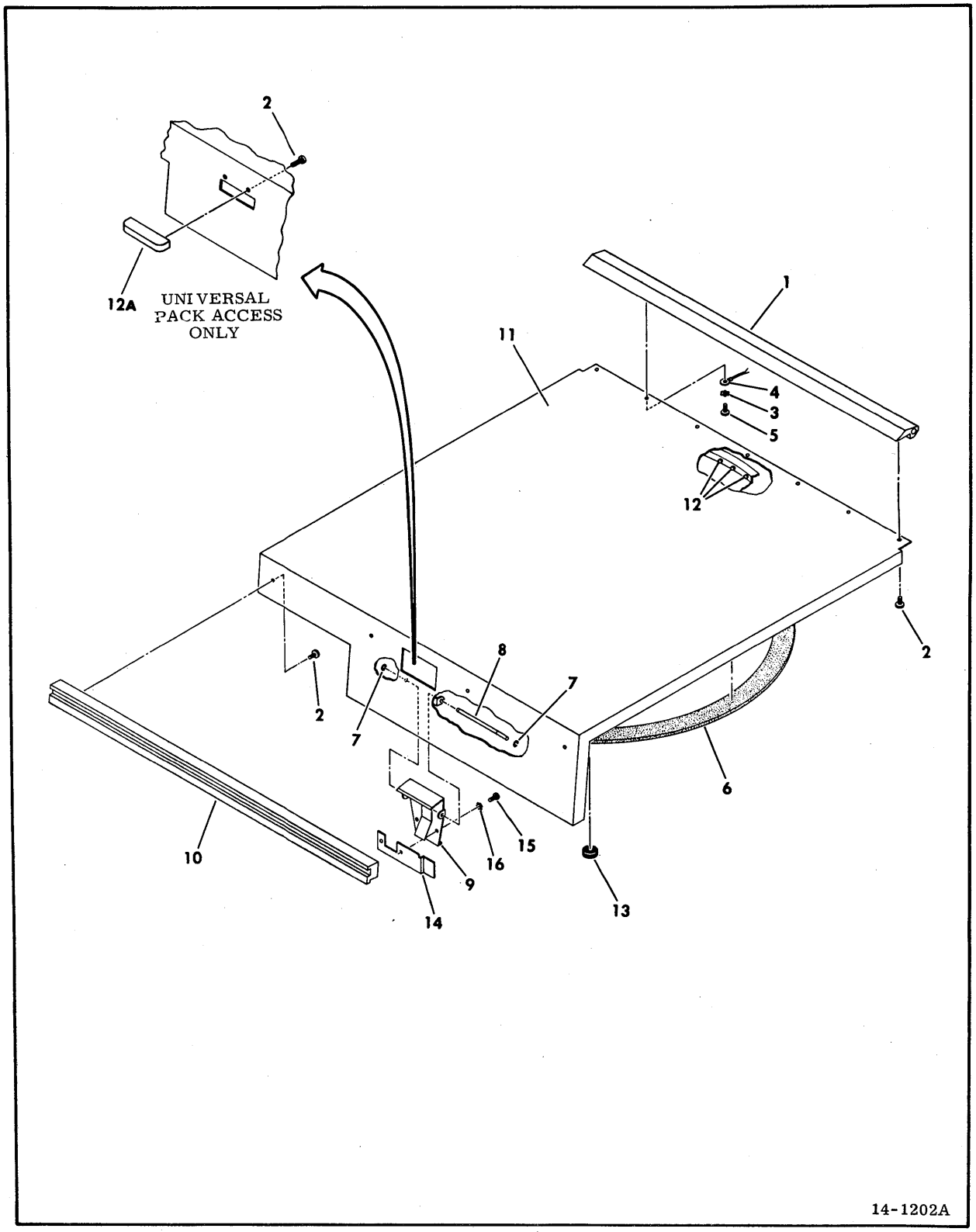

Figure 3-14. Pack Access Cover Assembly - Nonacoustic

INDEX NO	PART NO	PART DESCRIPTION	NOTE
3-14	750602**	PACK ACCESS COVER ASSEMBLY, Nonacoustic	Used on all units except BK5A1G/H
3-14	730531**	PACK ACCESS COVER ASSEMBLY, Universal	Used on BK5A1G/H only
1	75070200	RETAINER, Pack Cover	S/C 32 & Blw
1	73063600	RETAINER, Pack Cover	S/C 33 & Abv
2	93749158	SCREW, 6-32 x 1/4 Pan Head Machine	
3	10126401	WASHER, #6 External Tooth Lock	
4	94369529	CABLE, Ground	
5	10127111	SCREW, 6-32 x 1/4 Pan Head Machine	
6	94276611	TAPE, Foam	
7	92033107	RING, Retaining	
8	75070900	ROD, Latch Pivot	
9	75071401	LATCH AND SPRING ASSEMBLY	S/C 16 & Blw
9	75071403	LATCH AND SPRING ASSEMBLY	S/C 17 & Abv
10	77462900	HANDLE, Pack Access Cover	
11	474549**	COVER, Pack Access	S/C 17 & Abv
11	473116**	COVER, Pack Access	Used on BK4A5C/D and BK5A5N/P only
11	778189**	COVER, Pack Access	S/C 16 & Blw
11	730523**	COVER, Pack Access	Used on BK5A1G/H only
12	93549018	BUMPER, Nylon	
12A	73052500	BAR, Pinch	Used on BK5A1G/H only
		(ITEMS LISTED BELOW THIS NOTE ARE NOT PART OF THE PACK ACCESS COVER ASSEMBLY)	
13	75070701	BUMPER, Self Sticking	
14	76421800	KEEPER, Interlock	
15	10127102	SCREW, 4-40 x 1/4 Pan Head Machine	
16	10126400	WASHER, #4 External Tooth Lock	

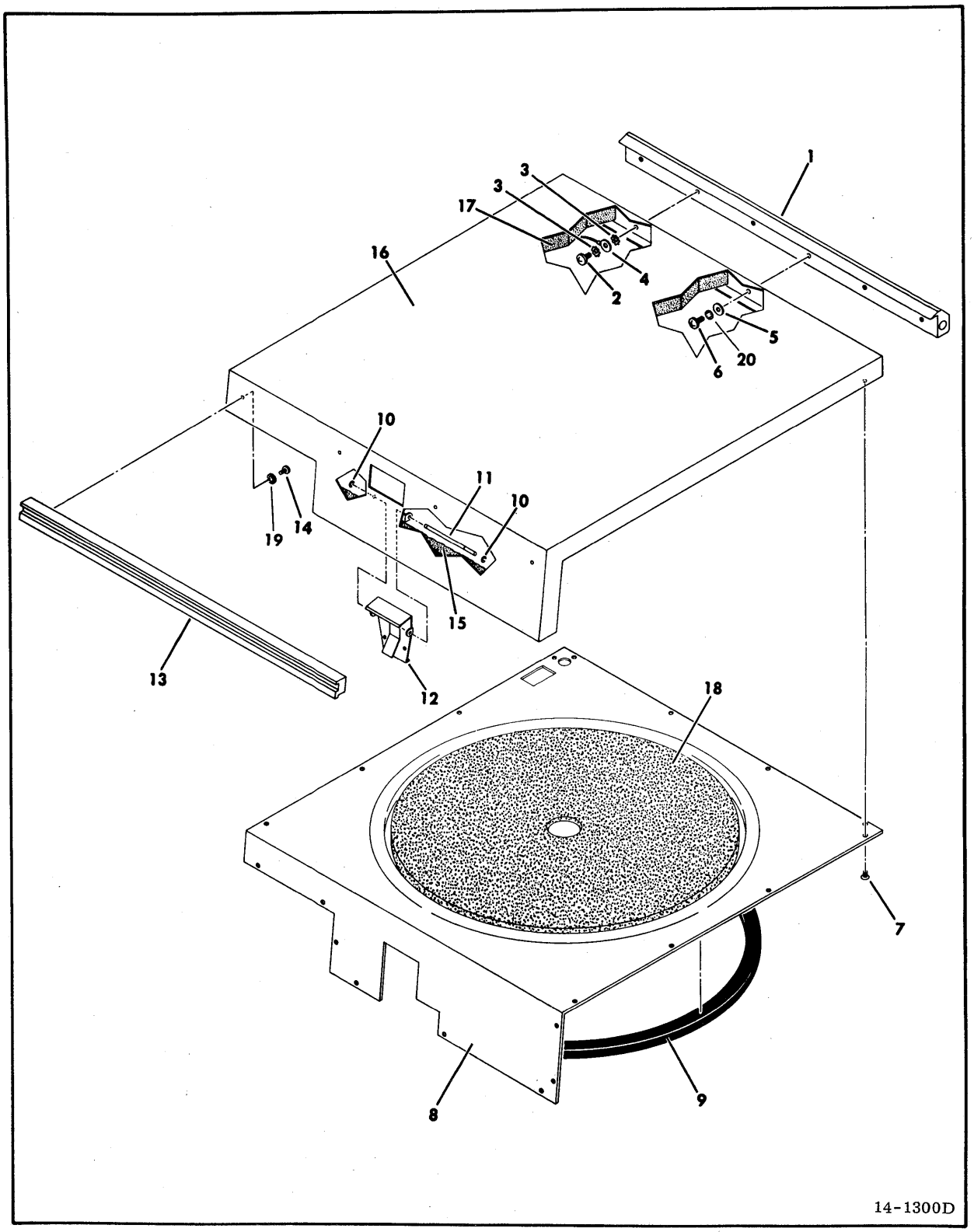

Figure 3-15. Pack Access Cover Assembly - Acoustic

INDEX NO	PART NO	PART DESCRIPTION	NOTE
3-15	775630**	PACK ACCESS COVER ASSEMBLY, Acoustic	
1	77560600	RETAINER, Pack Cover	
2	10127131	SCREW, 10-24 x 3/8 Pan Head Machine	
3	10126403	WASHER, #10 External Tooth Lock	
4	94369526	CABLE, Ground	Used on all units except BK5A7M & BK5A9U
4	94369534	CABLE, Ground	Used on BK5A7M & BK5A9U
5	10125607	WASHER, #10 Flat	
6	10127131	SCREW, 10-24 x .38 Pan Head Machine	
7	93725141	SCREW, Truss Head Machine	
8	83227400	COVER, Inner	
9	77561401	GASKET, Extended Sponge	
10	92033107	RING, Retaining	
11	75070900	ROD, Latch Pivot	
12	77563100	LATCH AND SPRING ASSEMBLY	S/C 16 & Blw
12	77563101	LATCH AND SPRING ASSEMBLY	S/C 17 & Abv
13	77462900	HANDLE, Pack Access Cover	
14	10127111	SCREW, 6-32 x .25 Pan Head Machine	
15	75040455	PANEL, Acoustical Foam	
16	832858**	COVER Pack Access	Used on all units except BK4A9E/F/G, BK5A7V/W, BK5C4C/D/E/F/R&S,
16	473316**	COVER, Pack Access	Used on BK4A9E/F/G, BK5A7V/W, BK5C4C/D/E/F/R&S, only
17	75040454	PANEL, Acoustical Foam	
18	75040456	PANEL, Acoustical Foam	
19	10126103	WASHER, #10 Internal Tooth Lock	
20	10126105	WASHER, #10 Internal Tooth Lock	

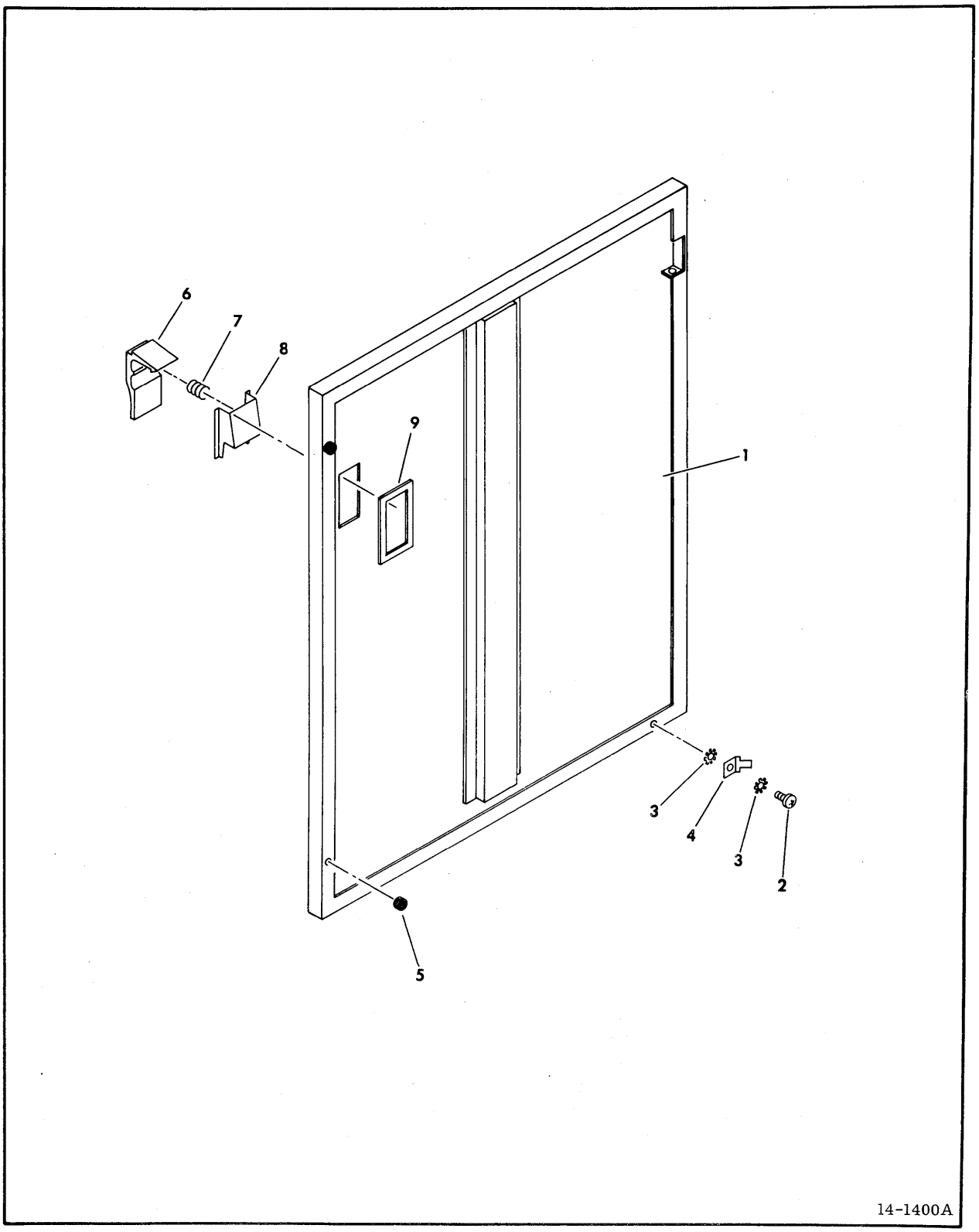

Figure 3-16. Front and Rear Door - Nonacoustic

INDEX NO	PART NO	PART DESCRIPTION	NOTE
3-16		FRONT AND REAR DOOR, Nonacoustic	
1	765158**	DOOR, Front	Used on all units except BK5B5N/P & BK5A6G/H
1	473131**	DOOR, Front	Used on BK5B5N/P & BK5A6G/H only
1	765159**	DOOR, Rear	Used on all units except BK5B5N/P & BK5A6G/H
1	473130**	DOOR, Rear	Used on BK5B5N/P & BK5A6G/H only
2	10127131	SCREW, 10-24 x 3/8 Pan Head Machine	
3	10126403	WASHER, #10 External Tooth Lock	
4	94274140	TERMINAL, Quick Connect	
5	92633021	BUMPER, Grommet	
6	94221400	LATCH, Flush	
7		SPRING, Latch	Supplied With Flush Latch
8		BRACKET, Latch	
9	94224907	SPACER, Latch	

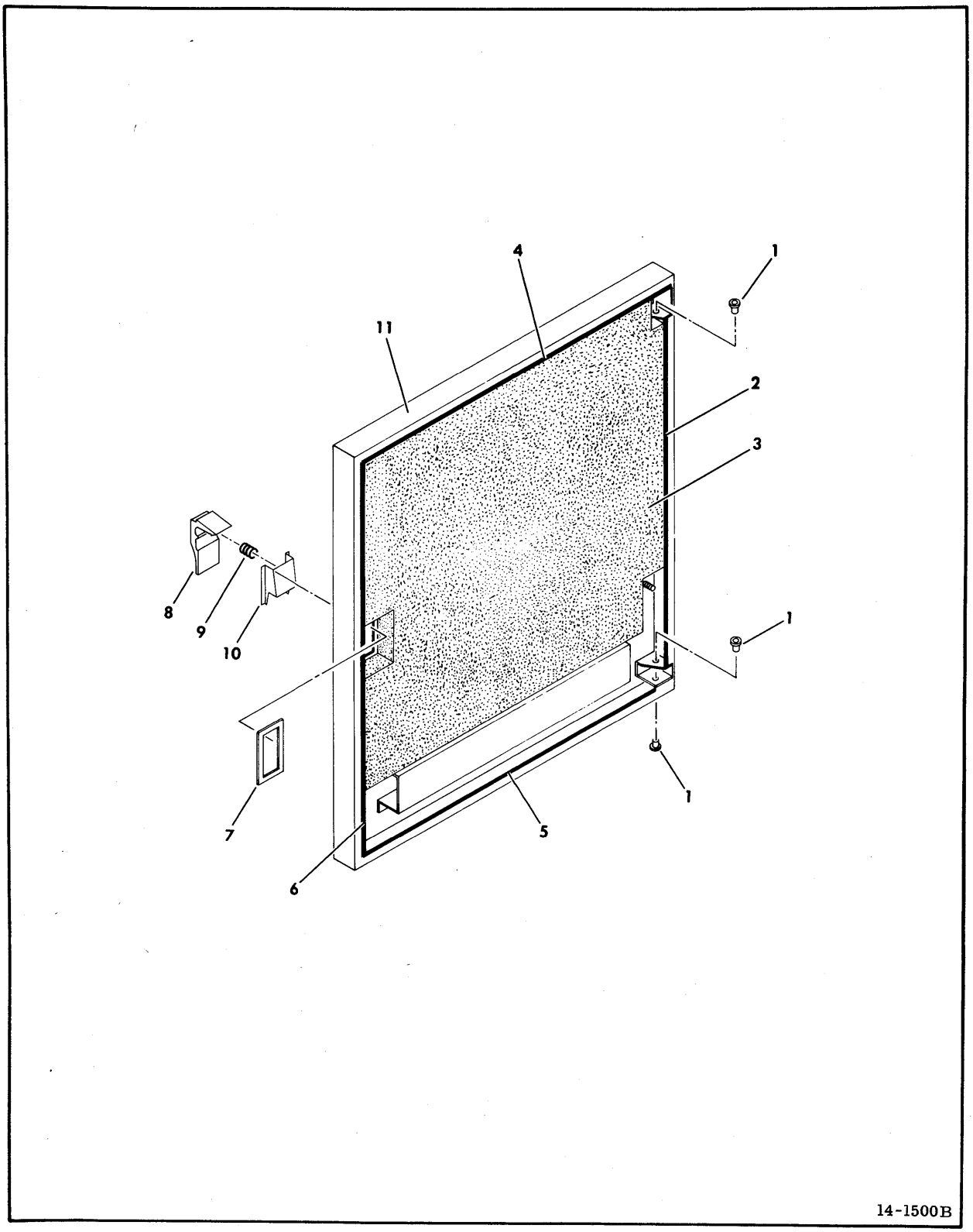

Figure 3-17. Front Door Assembly - Acoustic

INDEX NO	PART NO	PART DESCRIPTION	NOTE
3-17	775624**	FRONT DOOR ASSEMBLY, Acoustic Cabinet	
1	92373003	NYLINER, Snap In	
2	76429317	SEAL, Acoustical	
3	75040460	PANEL, Acoustical Foam	
4	76429314	SEAL, Acoustical	
5	76429315	SEAL, Acoustical	
6	76429313	SEAL, Acoustical	
7	94224906	SPACER, Latch	
8	94221400	LATCH, Flush	
9		SPRING, Latch	Supplied With Flush Latch
10		BRACKET, Latch	
11	775615**	DOOR, Front	Used on all units except BK4A9E/F/G, BK5A7V/W, BK5C4C/D/E/F/R&S
11	473154**	DOOR, Front	Used on BK4A9E/F/G, BK5A7V/W, BK5C4C/D/E/F/R&S only

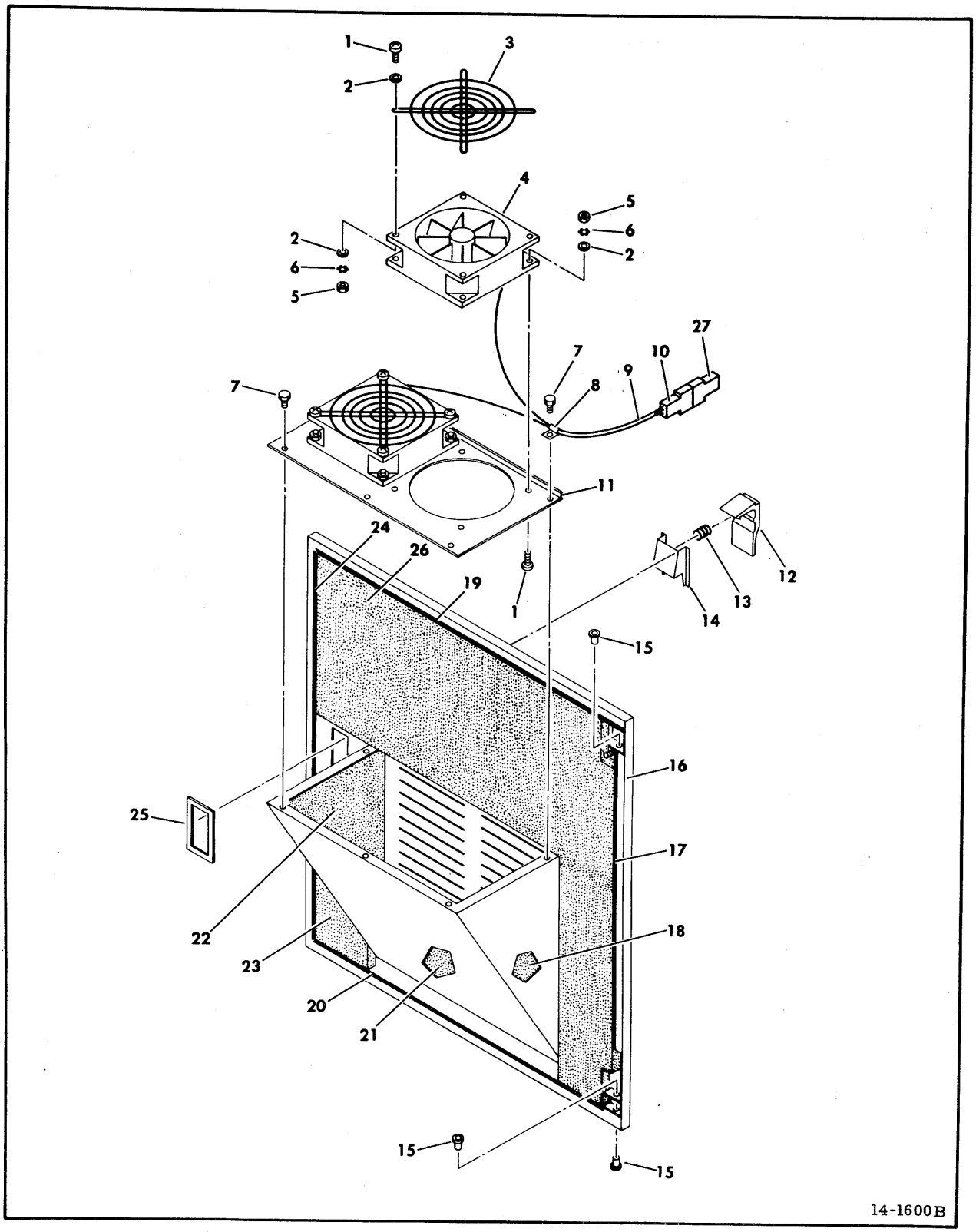

Figure 3-18. Rear Door Assembly - Acoustic Cabinet

INDEX NO	PART NO	PART DESCRIPTION	NOTE
3-18	775625**	REAR DOOR ASSEMBLY, Acoustic Cabinet	
1	10127115	SCREW, 6-32 x 5/8 Pan Head Machine	
2	10125605	WASHER, #6 Flat	
3	40034600	GUARD, Finger	
4	94253100	FAN, Venturi	60 Hz
4	94247101	FAN, Venturi	50 Hz
5	10125105	NUT, 6-32 Hex	
6	10126401	WASHER, #6 External Tooth Lock	
7	93592158	SCREW, 6-32 x 1/4 Self Tapping Hex Head	
8	92602002	CLAMP, Nylon Cable	
9		W11 CABLE ASSEMBLY (See Drive Electronics Assembly For Part Number)	
10	93948003	CONNECTOR, Pin Housing (P400)	
		(ASSOCIATED PARTS)	
	93942009	CONTACT, Pin	
		- - - * - - -	
11	77561900	PANEL, Fan Mounting	
12	94221400	LATCH, Flush	
13		SPRING, Latch	Supplied With
14		BRACKET, Latch	Flush Latch
15	92373003	NYLINER, Snap In	
16	778180**	DOOR, Rear	
17	76429316	SEAL, Acoustical	
18	75040467	PANEL, Acoustical Foam	
19	76429314	SEAL, Acoustical	
20	76429315	SEAL, Acoustical	
21	75040466	PANEL, Acoustical Foam	
22	75040468	PANEL, Acoustical Foam	
23	75040458	PANEL, Acoustical Foam	
24	76429313	SEAL, Acoustical	
25	94224906	SPACER, Latch	
26	75040461	PANEL, Acoustical Foam	
		(ITEMS LISTED BELOW THIS NOTE ARE NOT PART OF THE REAR DOOR ASSEMBLY)	
27	93947004	CONNECTOR, Pin Housing (J400) (Part of W12)	
		(ASSOCIATED PARTS)	
	93943009	CONTACT, Pin	
		- - - * - - -	

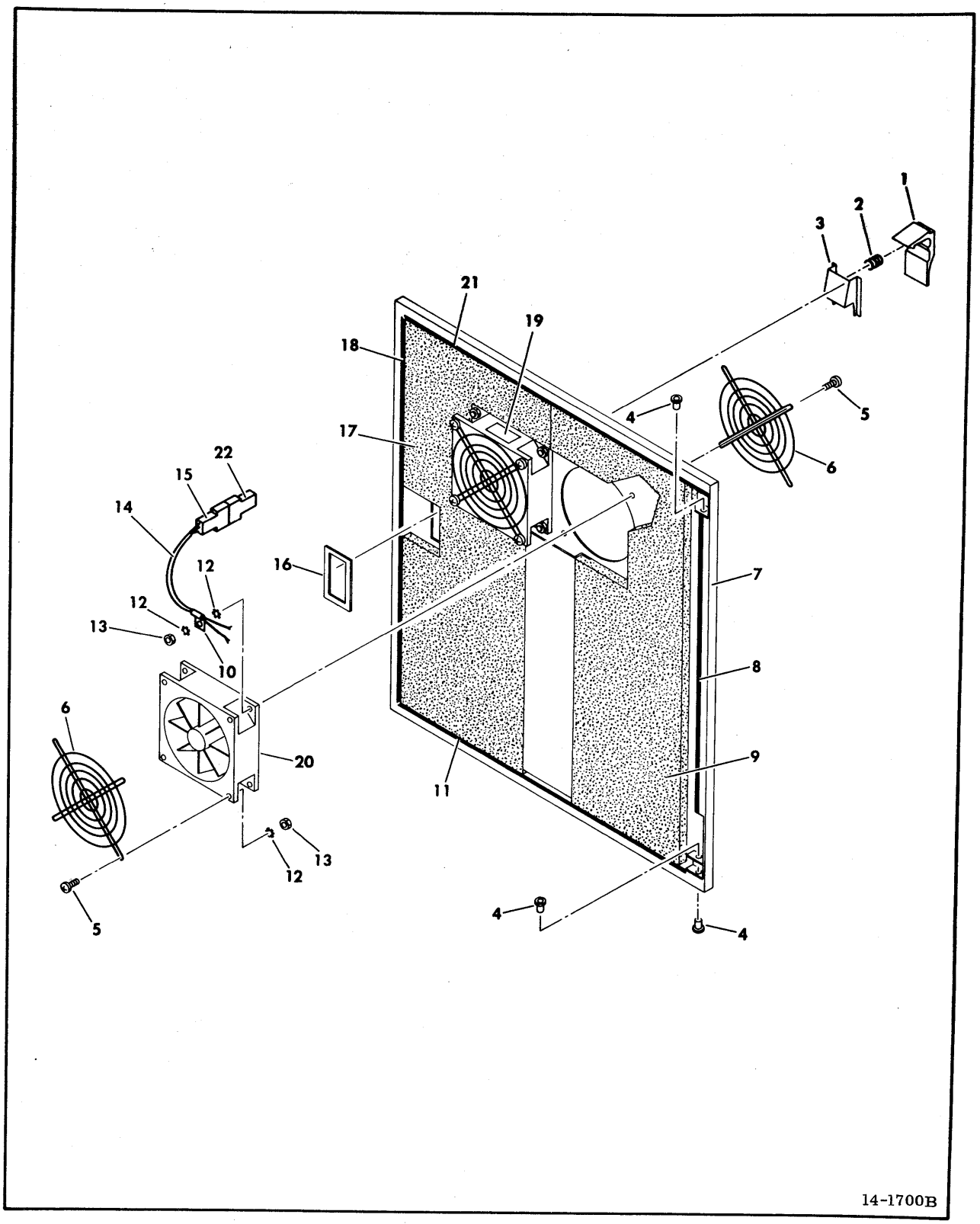

Figure 3-19. Rear Door Assembly - Acoustic Drawer

INDEX NO	PART NO	PART DESCRIPTION	NOTE
3-19	775601**	REAR DOOR ASSEMBLY, Acoustic Drawer	
1	94221400	LATCH, Flush	
2		SPRING, Latch	Supplied With Flush Latch
3		BRACKET, Latch	
4	92373003	NYLINDER, Snap In	
5	10127116	SCREW, 6-32 x 3/4 Pan Head Machine	
6	94375401	FINGER GUARD, Fan Axial	
7	778181**	DOOR, Rear	Used on all units except BK4A9E/F/G, BK5A7V/W, BK5C4C/D/E/F/R&S
7	473155**	DOOR, Rear	Used on BK4A9E/F/G, BK5A7V/W, BK5C4C/D/E/F/R&S only
8	76429316	SEAL, Acoustical	
9	75040470	PANEL, Acoustical Foam	
10	92602002	CLAMP, Nylon Cable	
11	76429315	SEAL, Acoustical	
12	10126401	WASHER, #6 External Tooth Lock	
13	10125105	NUT, 6-32 Hex	
14		W11 CABLE ASSEMBLY (See Drive Electronics Assembly For Part Number)	
15	93948003	CONNECTOR, Pin Housing (P400)	
		(ASSOCIATED PARTS)	
	93942009	CONTACT, Pin	
		- - - * - - -	
16	94224906	SPACER, Latch	
17	75040469	PANEL, Acoustical Foam	
18	76429313	SEAL, Acoustical	
19	94368701	LABEL	
20	94253100	FAN, Venturi	60 Hz, 120 V AC,
20	94253102	FAN, Venturi	60 Hz 220/240 V AC
20	94247101	FAN, Venturi	50 Hz
21	76429314	SEAL, Acoustical	

INDEX NO	PART NO	PART DESCRIPTION	NOTE
		(ITEMS LISTED BELOW THIS NOTE ARE NOT PART OF THE REAR DOOR ASSEMBLY)	
22	93947004	CONNECTOR, Pin Housing (J400) (Part of W12)	
		(ASSOCIATED PARTS)	
	93943001	CONTACT, Pin	

- - - * - - -

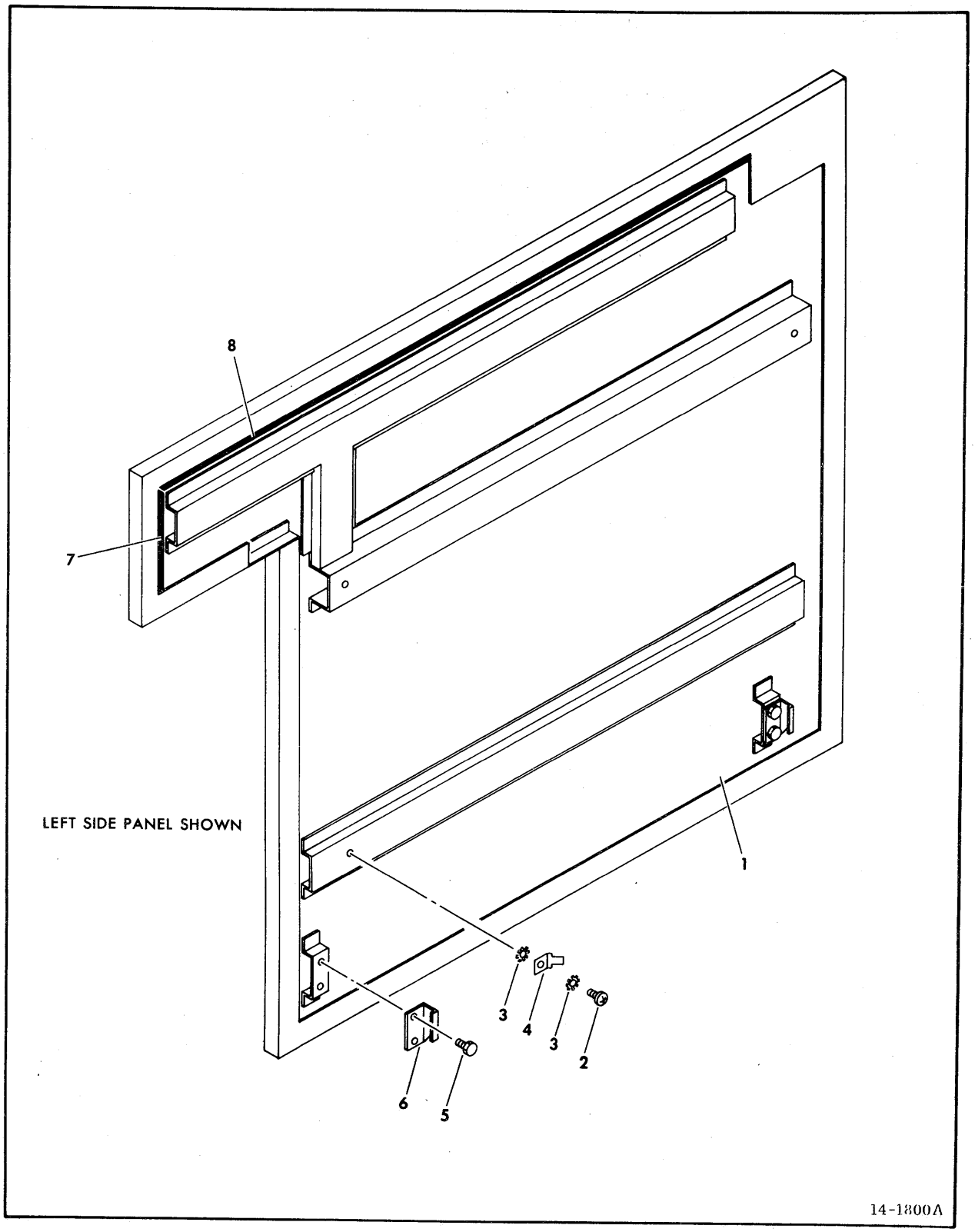

Figure 3-20. Side Panel - Nonacoustic

INDEX NO	PART NO	PART DESCRIPTION	NOTE
3-20		SIDE PANEL, Nonacoustic	
1	760299**	PANEL, Side	Left Side Panel used on all units except BK4A5C/D & BK5A5N/P
1	760298**	PANEL, Side	Right Side Panel used on all units except BK4A5C/D & BK5A5N/P
1	473119**	PANEL, Side	Left Side Panel used on BK5B5N/P BK5A6G/H, BK4A5C/D & BK5A5N/P only
1	473128**	PANEL, Side	Right Side Panel used on BK5B5N/P, BK5A6G/H, BK4A5C/D & BK5A5N/P only
2	10127131	SCREW, 10-24 x 3/8 Pan Head Machine	
3	10126403	WASHER, #10 External Tooth Lock	
4	94274140	TERMINAL, Quick Connect	
5	93592428	SCREW, 10-32 x 3/8 Self Tapping Hex Head	
6	77568600	BRACKET, Panel Mounting	
7	76429342	SEAL, Acoustical	Left Side Panel
7	76429345	SEAL, Acoustical	Right Side Panel
8	76429343	SEAL, Acoustical	Left Side Panel
8	76429344	SEAL, Acoustical	Right Side Panel

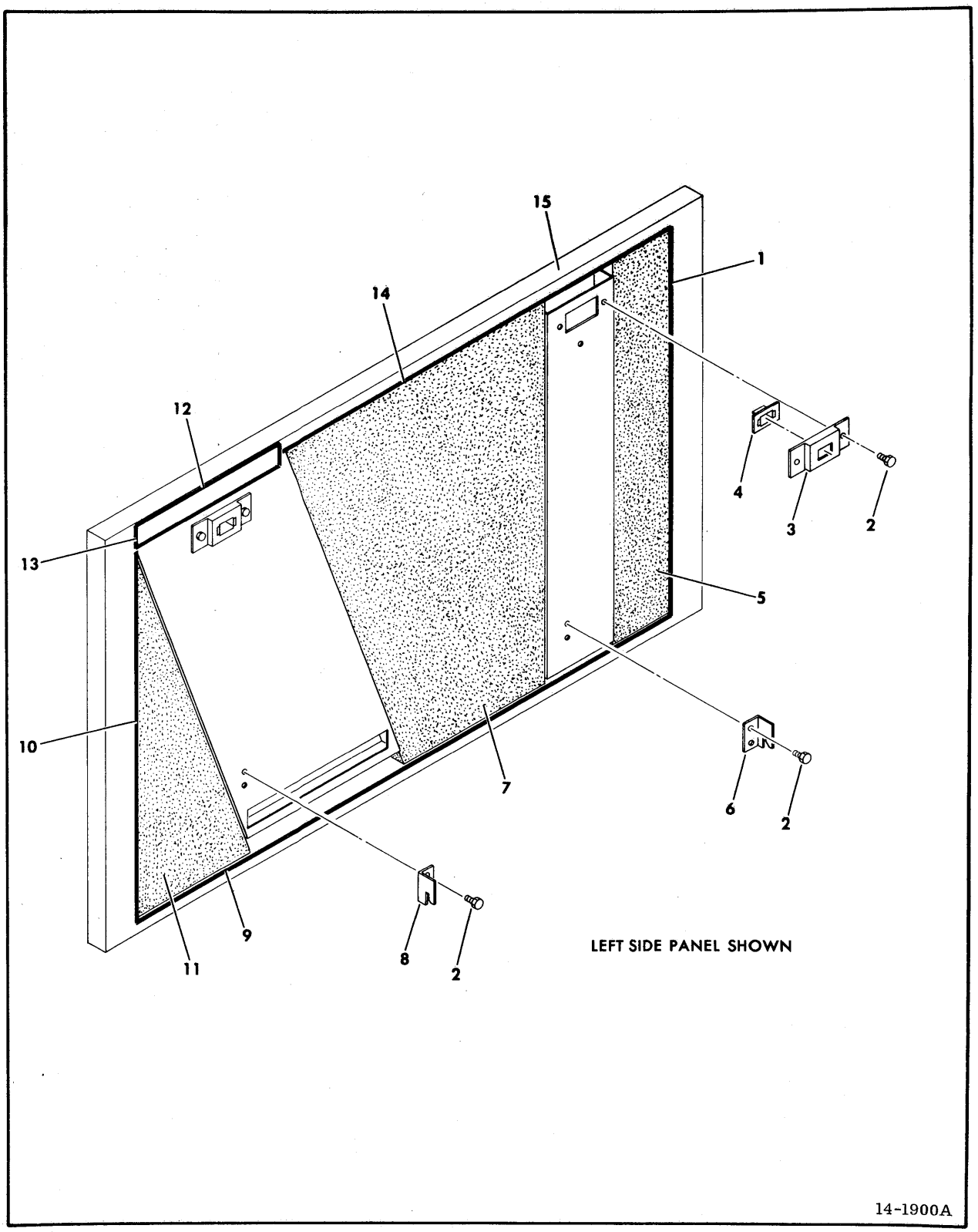

Figure 3-21. Side Panel Assembly - Acoustic

INDEX NO	PART NO	PART DESCRIPTION	NOTE
3-21	775622**	SIDE PANEL ASSEMBLY, Acoustic	
1	76429303	SEAL, Acoustical	
2	93592428	SCREW, 10-32 x 3/8 Self Tapping Hex Head	
3	77561300	BRACKET, Receptacle	
4	94303500	RECEPTACLE, Clip In	
5	75040459	PANEL, Acoustical Foam	
6	75194502	BRACKET, Support	
7	75040464	PANEL, Acoustical Foam	Left Side Panel
7	75040465	PANEL, Acoustical Foam	Right Side Panel
8	75194503	BRACKET, Support	
9	76429304	SEAL, Acoustical	
10	76429308	SEAL, Acoustical	Left Side Panel
10	76429307	SEAL, Acoustical	Right Side Panel
11	75040462	PANEL, Acoustical Foam	Left Side Panel
11	75040463	PANEL, Acoustical Foam	Right Side Panel
12	76429312	SEAL, Acoustical	
13	76429311	SEAL, Acoustical	
14	76429305	SEAL, Acoustical	Left Side Panel
14	76429306	SEAL, Acoustical	Right Side Panel
15	764290**	PANEL, Left Side	Used on all units except BK5C4C/D & BK5A7V/W
15	473156**	PANEL, Right Side	Used on BK5A7V/W & BK5C4C/D only
15	764292**	PANEL, Right Side	Used on all units except BK4A9E/F/G, BK5A7V/W, BK5C4C/D/E/F/R&S
15	473261**	PANEL, Left Side	Used on BK5A7V/W BK5C4C/D/E/F/R&S, BK4A9E/F/G only

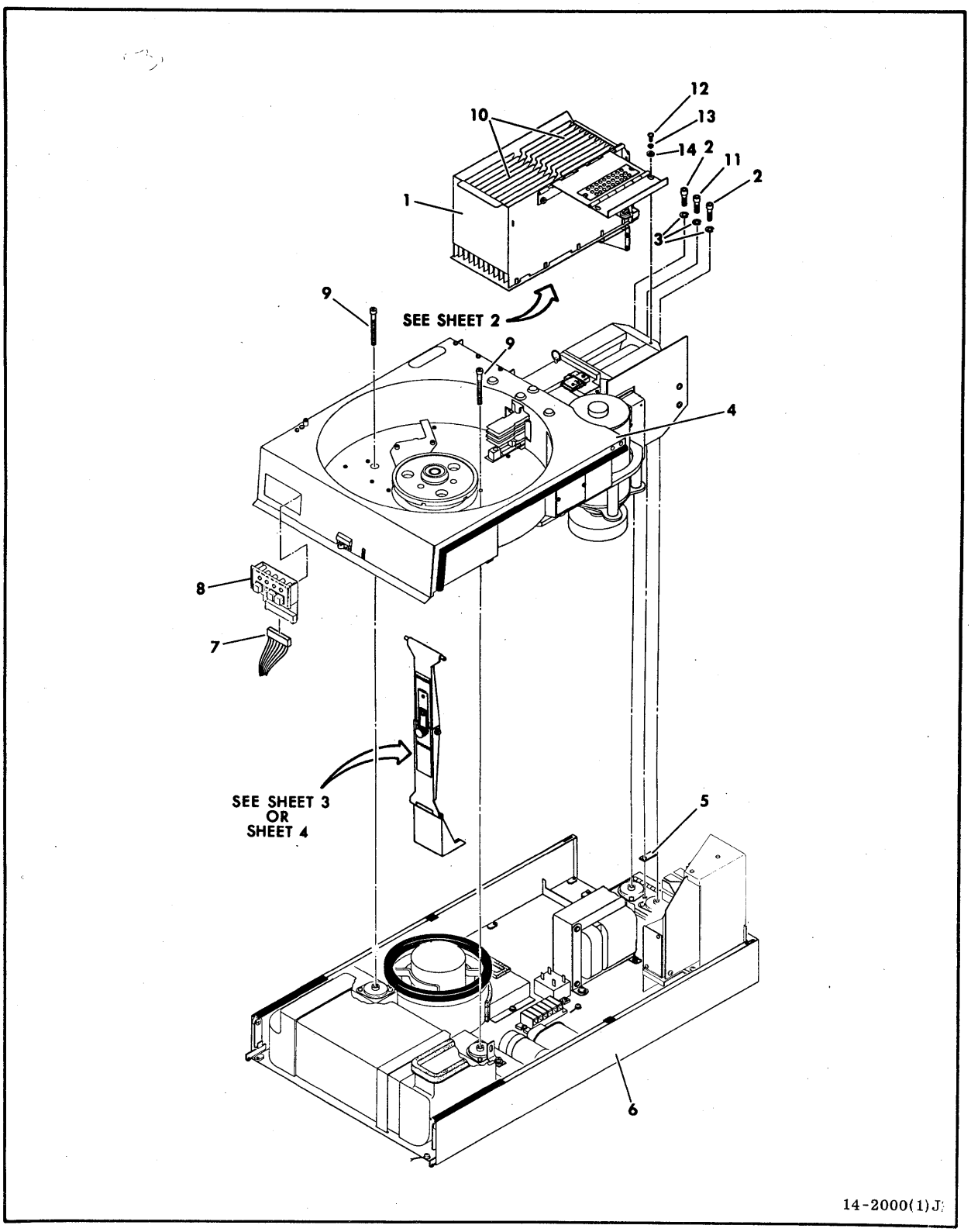

Figure 3-22. Drive Electronics Assembly (Sheet 1 of 4)

INDEX NO	PART NO	PART DESCRIPTION	NOTE
3-22		DRIVE ELECTRONICS ASSEMBLY (Sheet 1 of 4)	
1		LOGIC CHASSIS ASSEMBLY (A2) (See Figure 3-24)	
2	10126259	SCREW, 1/4 x 20 1-1/4 Socket Head	
3	10125806	WASHER, 1/4 Spring Lock	
4		DECK ASSEMBLY (A3) (See Figure 3-25)	
5	76420600	SPACER, Shock	
6		BASE ASSEMBLY (A1) (See Figure 3-32)	Used on all units except BK4B7B, BK5A1K, BK5A7M, BK5A9U, & BK5C1F
6		BASE ASSEMBLY (A1) (See Figure 3-33)	Used on BK4B7B, BK5A1K, BK5A7M, BK5A9U, & BK5C1F only.
7	94261810	BODY, Connector (P201) (Part of W3)	
		(ASSOCIATED PARTS)	
	94245601	CONTACT, Crimp	
		- - - * - - -	
8		CONTROL PANEL ASSEMBLY (A3A01) (See Figure 3-23)	
9	10126264	SCREW, 1/4 x 20 x 2-1/2 Socket Head	
10	##	LOGIC CARDS	
11	10126259	SCREW, 1/4-20 x 1-1/4 Socket Head	
12	10127122	SCREW, 8-32 x 3/8 Pan Head Machine	
13	10125804	WASHER, #8 Spring Lock	
14	10125606	WASHER, #8 Flat	
		(THE PART NUMBERS FOR ALL CABLES AND HARNESSES APPEAR BELOW)	
	47172700	W1 HARNESS ASSEMBLY	50 Hz S/C 30 & Blw; 60 Hz S/C 33 & Blw used on all units except BK4B7B, BK5A1K, BK5A7M, BK5A9U & BK5C1F

INDEX NO	PART NO	PART DESCRIPTION	NOTE
3-22		DRIVE ELECTRONICS ASSEMBLY (Sheet 1 of 4) (Contd)	
	47172702	W1 HARNESS ASSEMBLY	50 Hz S/C 31 & Abv; 60 Hz S/C 34 & Abv, used on all units except BK4B7B, BK5A1K, BK5A7M, BK5A9U, BK5C/F only
	47172701	W1 HARNESS ASSEMBLY	50 Hz S/C 30 & Blw; 60 Hz S/C 33 & Blw, used on BK4B7B, BK5A1K, BK5A7M, BK5A9U, BK5C1F, only
	47172703	W1 HARNESS ASSEMBLY	50 Hz S/C 31 & Abv; 60 Hz S/C 34 & Abv, used on BK4B7B, BK5A1K, BK5A7M, BK5A9U, BK5C1F only
	47171900	W2 CABLE ASSEMBLY	
	47174600	W3 HARNESS ASSEMBLY	Used on units W/3 Card Power Supply only
	47437500	W3 HARNESS ASSEMBLY	Used on units W/2 Card Power Supply only
	47172100	W4 CABLE ASSEMBLY	
	83276700	W6 CABLE ASSEMBLY	Used on BK4B7B, BK5A1K, BK5A7M, BK5A9U, BK5C1F, only
	77562001	W11 CABLE ASSEMBLY	
	77562901	W12 CABLE ASSEMBLY	Not used on basic units

(TERMINALS AND CONNECTORS FOR ALL HARNESSING ARE SHOWN AT THEIR ORIGINS AND DESTINATIONS)

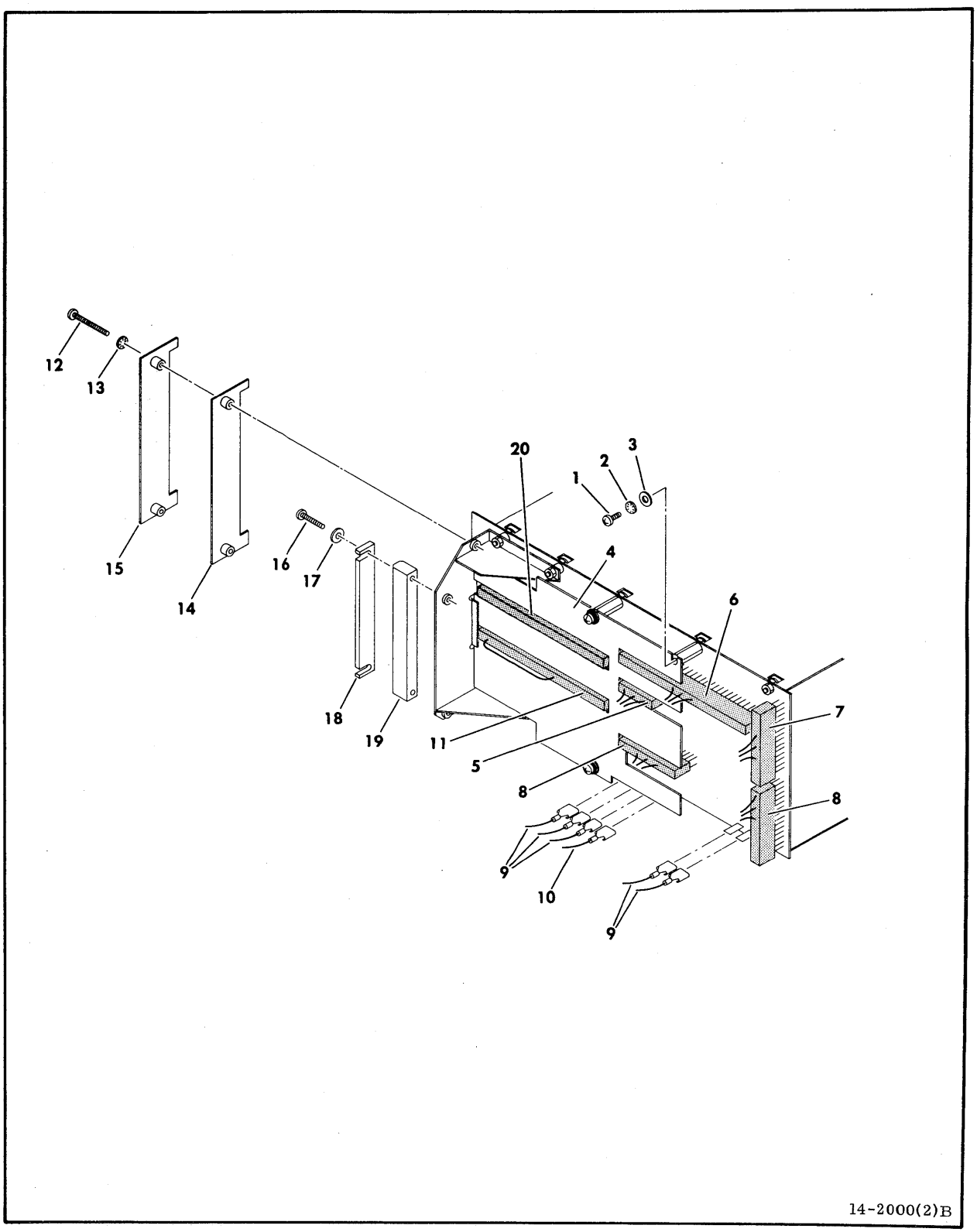

Figure 3-22. Drive Electronics Assembly (Sheet 2)

INDEX NO	PART NO	PART DESCRIPTION	NOTE
3-22		DRIVE ELECTRONICS ASSEMBLY (Sheet 2)	
1	10127113	SCREW, 6-32 x 3/8 Pan Head Machine	
2	10126103	WASHER, #6 Internal Tooth Lock	
3	10125605	WASHER, #6 Flat	
4	47173200	PANEL, Logic Chassis Protective	
5	94261807	BODY, Connector (PA07) (Part of W2)	
		(ASSOCIATED PARTS)	
	94245602	CONTACT, Socket	
		- - - * - - -	
6	94261811	BODY, Connector (PA09) (Part of W3)	
		(ASSOCIATED PARTS)	
	94245606	CONTACT, Socket	
		- - - * - - -	
7	94261810	BODY, Connector (JA81) (Part of W4)	
		(ASSOCIATED PARTS)	
	94245602	CONTACT, Socket	
	94245607	CONTACT, Socket	
	94245604	CONTACT, Socket	
		- - - * - - -	
8	94261810	BODY, Connector (PA03) (JA80) (Part of W3)	
		(ASSOCIATED PARTS)	
	94245601	CONTACT, Socket	
	94245606	CONTACT, Socket	
		- - - * - - -	
9	95643216	CONNECTOR, Quick Connect (Part of W3)	
10		CABLE, Ground (See Base Assembly For Part Number)	
11	47203103	JUMPER PLUG ASSEMBLY	Single Channel Units Only
12	10127119	SCREW, MACHINE, 6-32 x 1 1/4 Pan Head	
13	10126103	WASHER, #6 Internal Tooth Lock	
14	##	I/O CARD, Channel I _XYV COMP ASSY (A2D1)	
15	##	I/O CARD, Channel II _XYV COMP ASSY (A2D2)	Dual Channel Units Only

INDEX NO	PART NO	PART DESCRIPTION	NOTE
3-22		DRIVE ELECTRONICS ASSEMBLY (Sheet 2) (Contd)	
16	92742178	SCREW, 6-32 x 1 3/4 Pan Head Machine	
17	10125605	WASHER, #6 Flat	
18	82377300	CLAMP, I/O	Used on all units except BK5A6G/H
19	82377200	SPACER, Clamp I/O	
20	##	TERMINATOR, _YDV COMP ASSY (A2C1) (Not Shown)	See Note
21	##	TERMINATOR, _YDV COMP ASSY (A2C2) (Not Shown)	See Note

NOTE:

Used to terminate D1 and D2 if drives are in a Star Configuration or if drive is last unit in string.

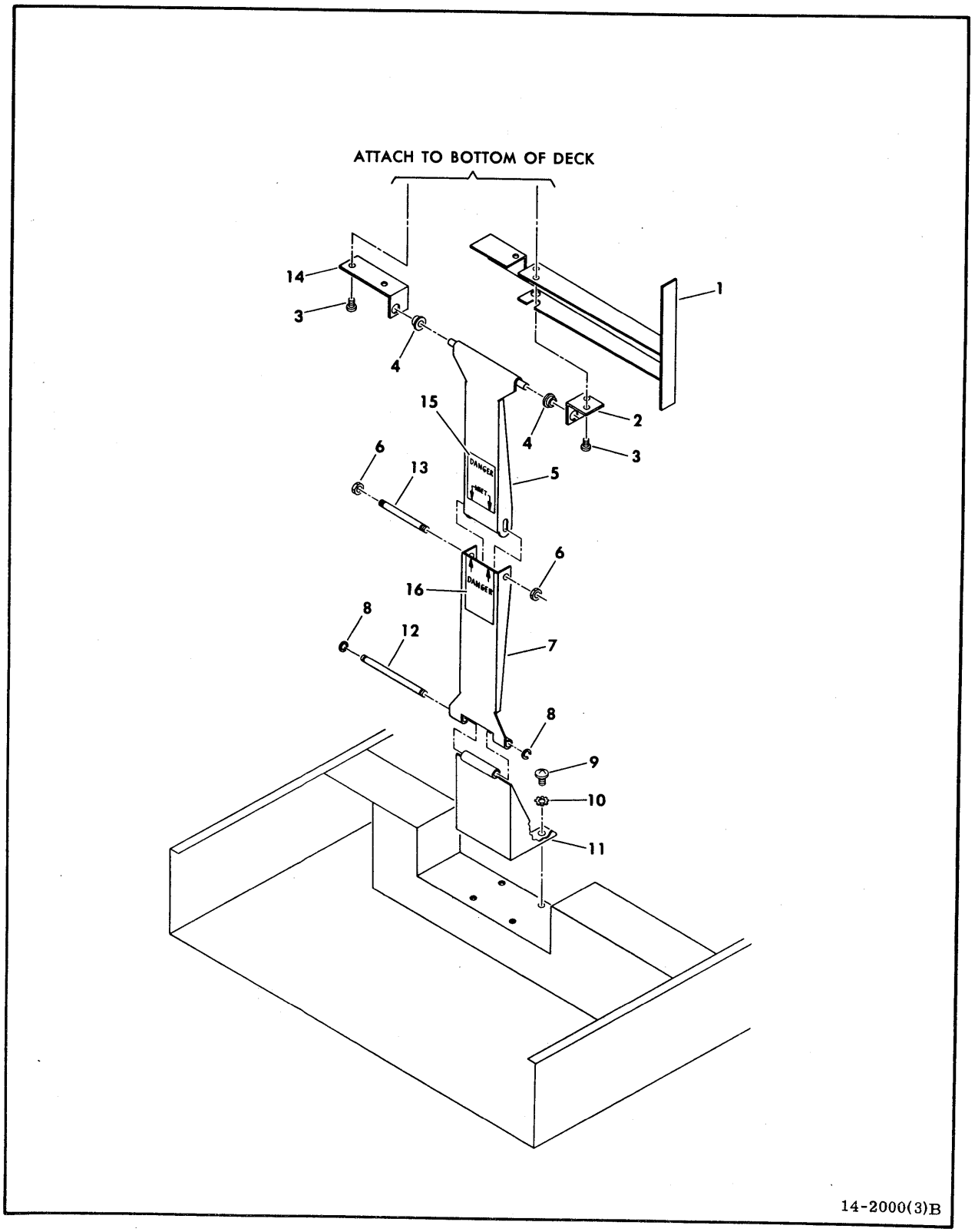

Figure 3-22. Drive Electronics Assembly (Sheet 3)
S/C 19 & Below W/O FCO 55172

INDEX NO	PART NO	PART DESCRIPTION	NOTE
3-22		DRIVE ELECTRONICS ASSEMBLY (Sheet 3)	Used on units S/C 19 & Below W/O FCO 55172
1		BAFFLE, Air (See Deck Assembly Sheet 6 for Part Number)	
2	83278600	PIVOT, Upper	
3	93749162	SCREW, 6-32 x 3/8 Pan Head Machine	
4	94347107	WASHER, Shoulder	
5	83278300	ARM, Upper Deck Support	
6	94218000	NUT, 6-32 Self Locking	
7	83278400	ARM, Lower Deck Support	
8	92033037	RING, Retaining	
9	10127142	SCREW, 10-32 x 3/8 Pan Head Machine	
10	10126403	WASHER, #10 External Tooth Lock	
11	83278500	PIVOT, Lower Deck Support	
12	83278700	SHAFT, Grooved	
13	83278800	STUD	
14	83278601	PIVOT, Upper	
15	94391514	LABEL, Upper Bracket Danger	
16	94391520	LABEL, Lower Bracket Danger	

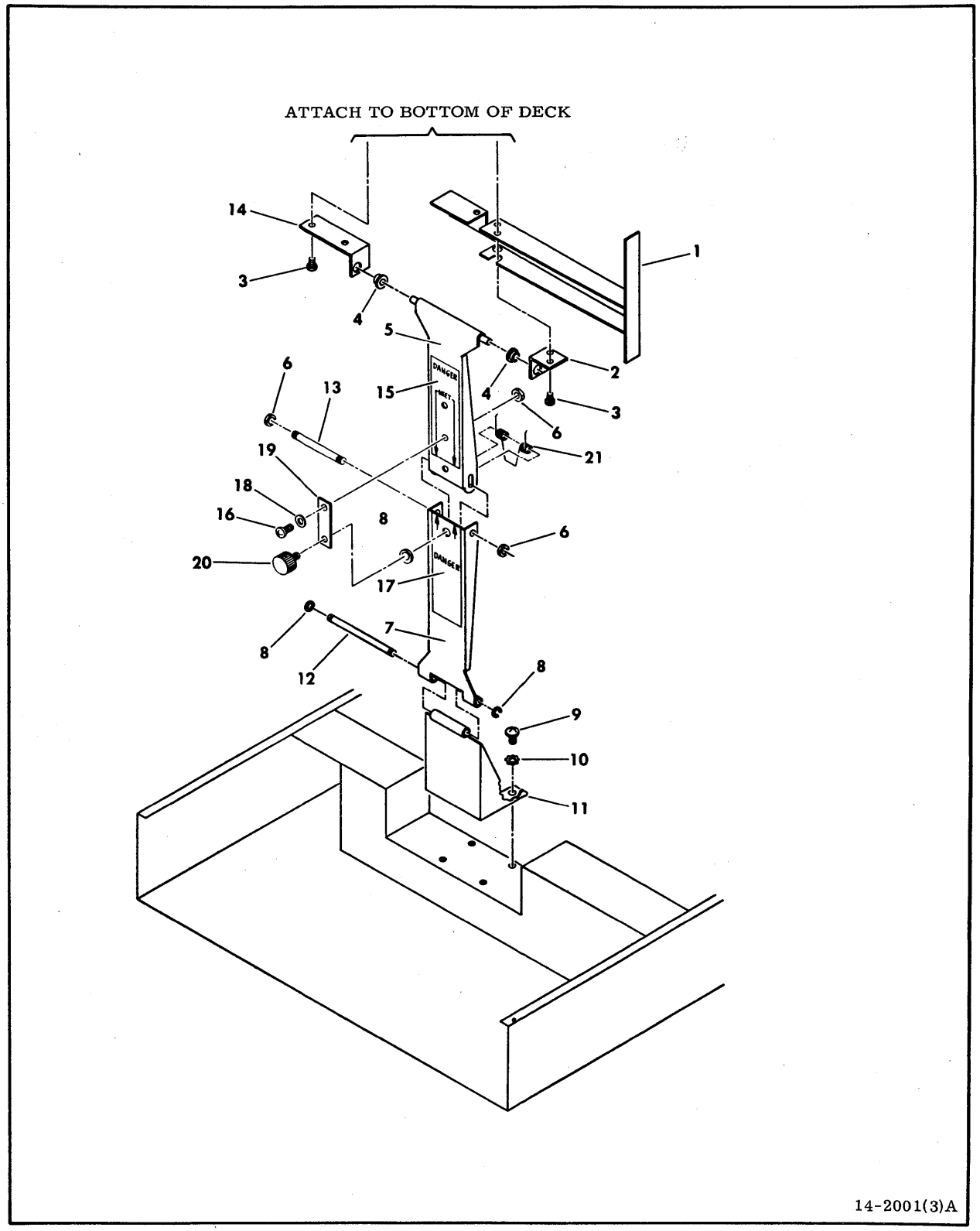

Figure 3-22. Drive Electronics Assembly (Sheet 4)
S/C 20 & Above
S/C 19 & Below With Optional FCO 55172

INDEX NO	PART NO	PART DESCRIPTION	NOTE
3-22		DRIVE ELECTRONICS ASSEMBLY (Sheet 4)	Used on units S/C 20 & Above & on units S/C 19 & Below if optional FCO 55172 is installed.
1		BAFFLE, Air (See Deck Assembly, Sheet 6 for Part Number)	
2	83278600	PIVOT, Upper	
3	93749162	SCREW, 6-32 x 3/8 Pan Head Machine	
4	94347107	WASHER, Shoulder	
5	47443800	ARM, Upper Deck Support	
6	94218000	NUT, 6-32 Self Locking	
7	47443700	ARM, Lower Deck Support	
8	92033037	RING, Retaining	
9	10127142	SCREW, 10-32 x 3/8 Pan Head Machine	
10	10126403	WASHER, #10 External Tooth Lock	
11	83278500	PIVOT, Lower Deck Support	
12	83278700	SHAFT, Grooved	
13	83278800	STUD	
14	83278601	PIVOT, Upper	
15	94391515	LABEL, Danger	
16	10127113	SCREW, 6-32 x 3/8 Pan Head Machine	
17	94218000	NUT, Self-Locking	
18	10125605	WASHER, #6 Flat	
19	82345100	RETAINER, Nylon	
20	82345000	SCREW, Thumb	
21	82345200	SPRING, Torsion	
22	94391516	LABEL, Danger	

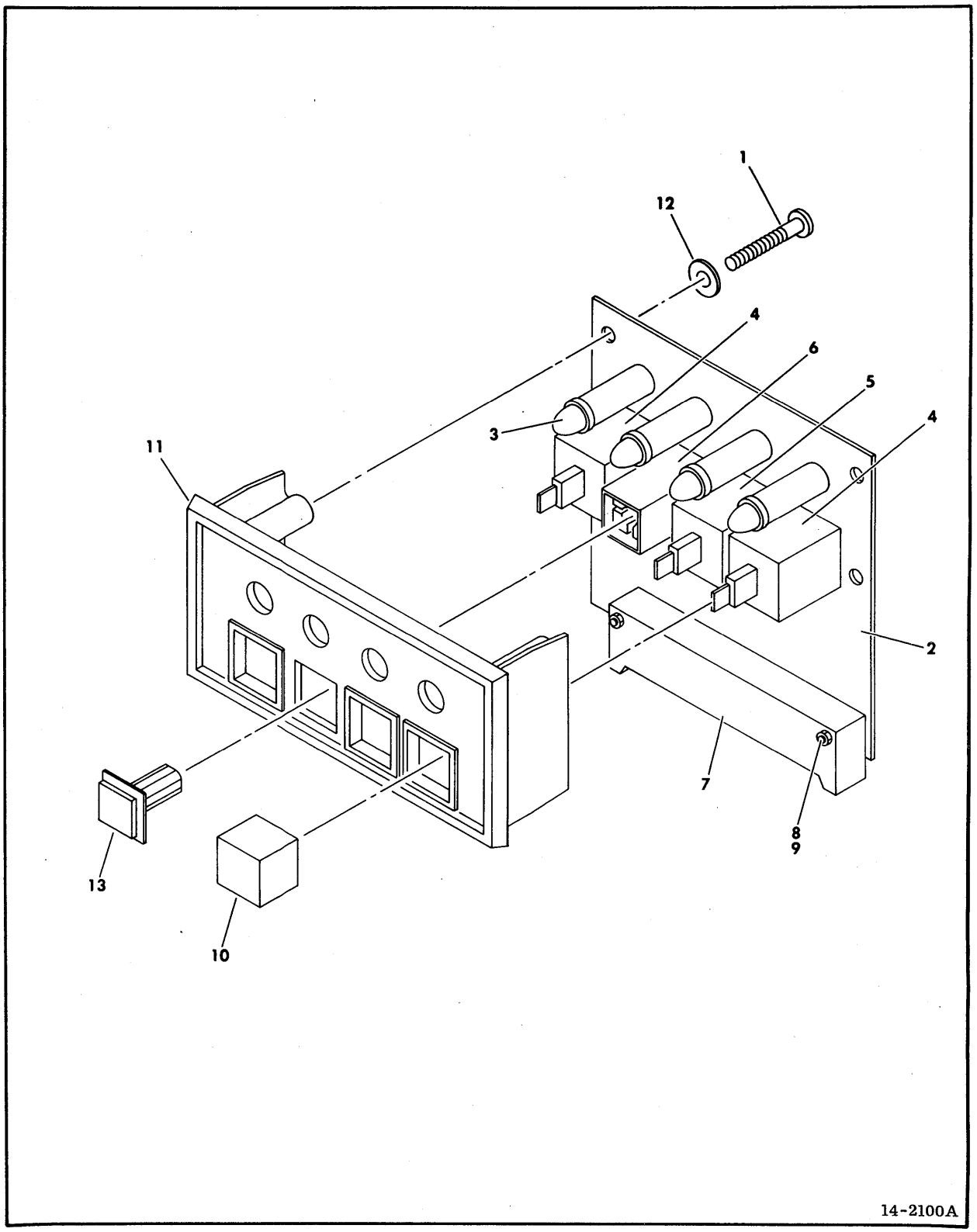

Figure 3-23. Control Panel Assembly

INDEX NO	PART NO	PART DESCRIPTION	NOTE
3-23	##	CONTROL PANEL ASSEMBLY (A3A01)	Used on all except basic units
1	17901505	SCREW, 4-40 x 3/4 Phillips Thread Roll	
2	##	COMPONENT ASSEMBLY, Type _ZYN	
3	94367112	LED, Diffused Lens (1CR2, 1CR3, 1CR4, 1CR6)	
4	94363701	SWITCH, Keyboard (S1, S4)	
5	94363700	SWITCH, Keyboard (S3)	
6	94364816	SWITCH, Programmable (S2)	
7	94365600	HEADER, Pin	
8	92742011	SCREW, 2-56 x 7/16 Pan Head Machine	
9	10125102	NUT, 2-56 Hex	
10	75068300	BUTTON, Front Panel	
11	76422400	BEZEL, Front Panel	Used on all units except BK5C4R/S
11	76422402	BEZEL, Front Panel	Used on BK5C4R/S only
12	10125603	WASHER, #4 Flat	
		(ITEMS LISTED BELOW THIS NOTE ARE NOT PART OF THE CONTROL PANEL ASSEMBLY)	
13	82353600	KIT, Logic Plug	Packaged separately and shipped with unit.
	943724XX	KEY, Programmable Insert (Logical Address Plug) (Tab 00-15)	Part number tab corresponds to to key number.

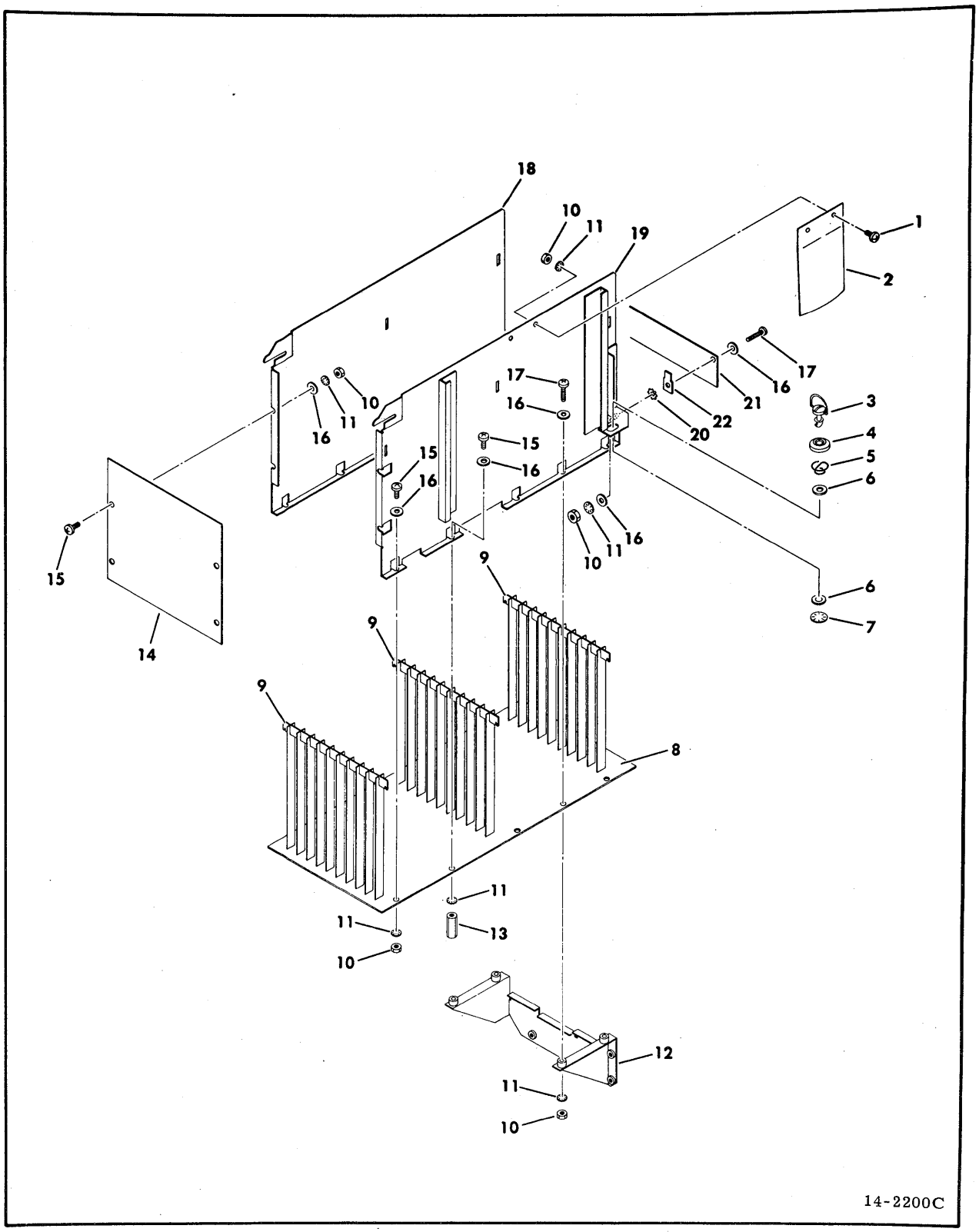

Figure 3-24. Logic Chassis Assembly (Sheet 1 of 2)
S/C 16 & Blw

INDEX NO	PART NO	PART DESCRIPTION	NOTE
3-24	471742XX	LOGIC CHASSIS ASSEMBLY (Sheet 1 of 2)	S/C 16 & Blw
1	10127111	SCREW, 6-32 x 1/4 Pan Head Machine	
2	47198400	SPRING, Logic Chassis Flat	
3	51911752	FASTENER, 1/4 Turn	
4	94379800	ACCESSORIES, 1/4 Turn Fastener	
5	94379801	ACCESSORIES, 1/4 Turn Fastener	
6	94379802	ACCESSORIES, 1/4 Turn Fastener	
7	93988002	RETAINER, Split Ring	
8	471741XX	WIRE WRAP ASSEMBLY	
	94245409	POST, Wire Wrap (.732)	
	94245410	POST, Wire Wrap (1.122)	
	94245411	POST, Wire Wrap (1.122 Soldered To Ground)	
	94245415	POST, Wire Wrap (.695)	
9	46490200	RAIL, Guide	
10	10125105	NUT, 6-32 Hex	
11	10126103	WASHER, #6 Internal Tooth Lock	
12	83255200	SUPPORT, I/O Card	
13	93114216	STANDOFF, Tapped Post Hex	
14	47171300	PANEL, Logic Chassis End	
15	10127113	SCREW, 6-32 x 3/8 Pan Head Machine	
16	10125605	WASHER, Flat	
17	10127115	SCREW, 6-32 x 5/8 Pan Head Machine	
18	47170900	PANEL, Logic Chassis Right Side	
19	47171000	PANEL, Logic Chassis Left Side	
20	10126401	WASHER, #6 External Tooth Lock	
21	47205800	INSULATOR, I/O	
22	94274101	TERMINAL, Quick Connect	

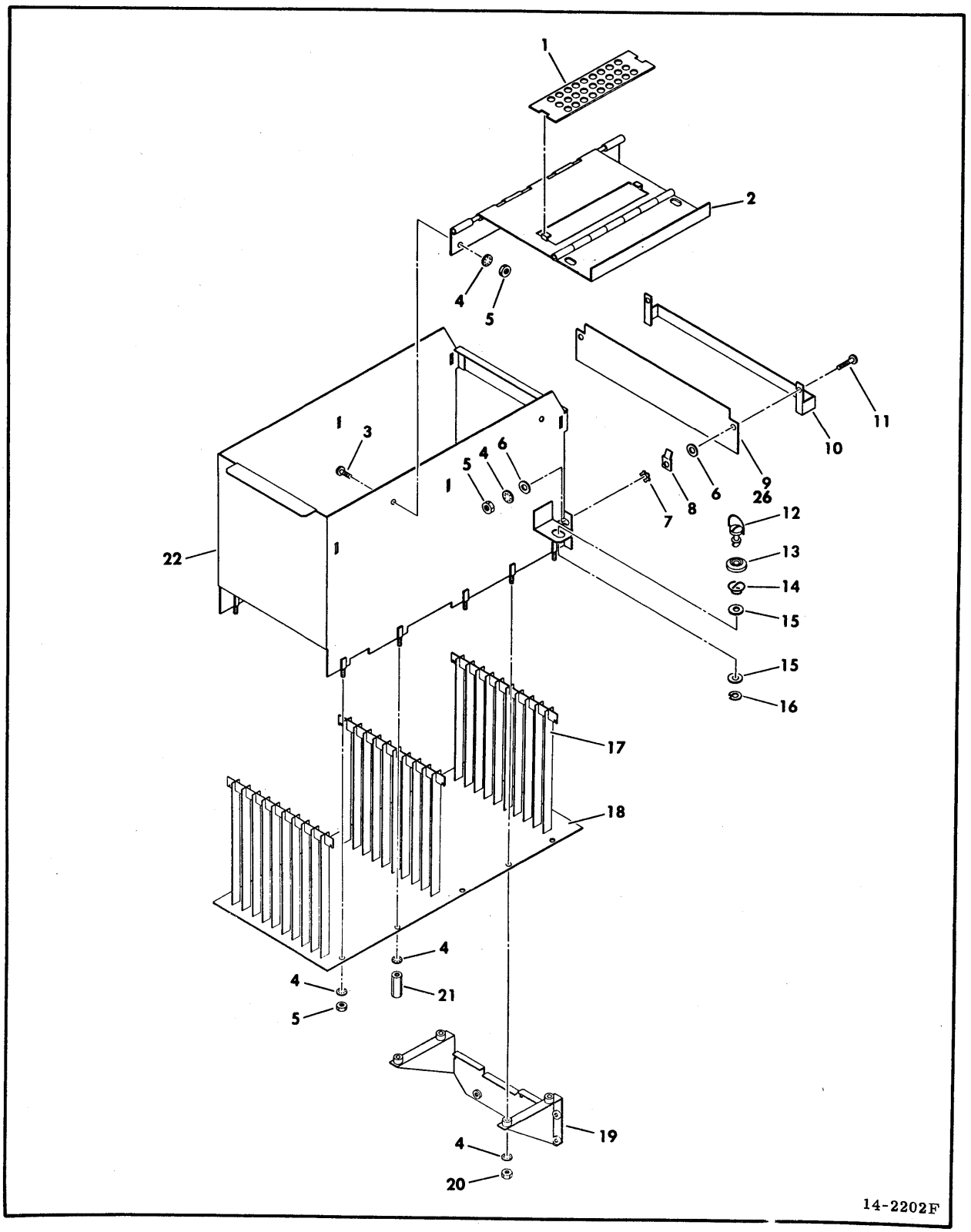

Figure 3-24. Logic Chassis Assembly (Sheet 2)
S/C 17 & Abv

INDEX NO	PART NO	PART DESCRIPTION	NOTE
3-24	832812XX	LOGIC CHASSIS ASSEMBLY (Sheet 2)	S/C 17 & Abv
1	73022600	COVER, Magnet	
2	83279700	HINGE, Logic Chassis	
3	10127113	SCREW, 6-32 x 3/8 Pan Head Machine	
4	10126103	WASHER, #6 External Tooth Lock	
5	10125105	NUT, 6-32 Hex	
6	10125605	WASHER, #6 Flat	
7	10126401	WASHER, #6 External Tooth Lock	
8	94274101	TERMINAL, Quick Connect	
9	47205802	INSULATOR, I/O	
10	83281100	GUARD, I/O Pins	
11	10127113	SCREW, 6-32 x 1/2 Pan Head Machine	
12	51911752	ACCESSORIES, 1/4 Turn Bail Head	
13	94379800	ACCESSORIES, 1/4 Turn Fastener	
14	94379801	ACCESSORIES, 1/4 Turn Fastener	
15	94379802	ACCESSORIES, 1/4 Turn Fastener	
16	93988002	WASHER, Retaining	
17	46490200	RAIL, Guide	
18	471741XX	WIRE WRAP ASSEMBLY	
	94245409	POST, Wire Wrap (.732)	
	94245410	POST, Wire Wrap (1.122)	
	94245411	POST, Wire Wrap (1.122 Soldered To Ground)	
	94245415	POST, Wire Wrap (.695)	
19	83281900	SUPPORT, I/O Cards	
20	93290003	NUT, Internal Wrenching	
21	93114216	STANDOFF, Tapped Post, Hex	
22	83279800	CHASSIS, Logic	

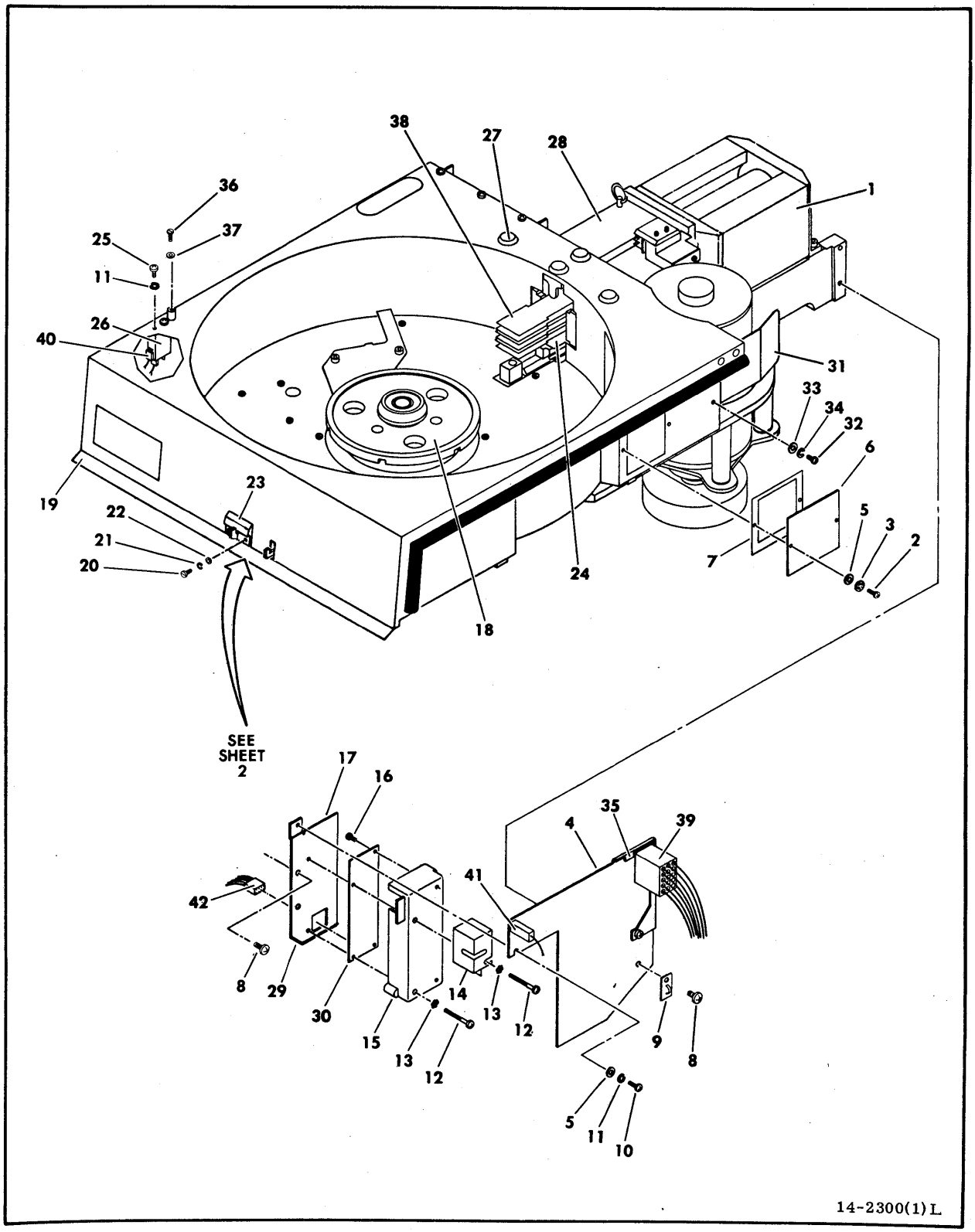

Figure 3-25. Deck Assembly (Sheet 1 of 6)

INDEX NO	PART NO	PART DESCRIPTION	NOTE
3-25		DECK ASSEMBLY (A3) (Sheet 1 of 6)	
1		MAGNET ASSEMBLY (See Figure 3-29)	
2	10127142	SCREW, 6-32 x 1/2 Pan Head Machine	
3	10126103	WASHER, #6 Internal Tooth Lock	
4		POWER AMPLIFIER, (A3A04) (_VTN Card) (See Figure 3-31)	
5	10125605	WASHER, #6 Flat	
6	77563700	WINDOW, Shroud	
7	77563800	GASKET, Shroud Window	
8	93749238	SCREW, 10-24 x 3/8 Pan Head Machine	
9	94277503	BASE, Mounting	
10	10127113	SCREW, 6-32 x 3/8 Pan Head Machine	
11	10125803	WASHER, #6 Spring Lock	
12	10127119	SCREW, 6-32 x 1/4 Pan Head Machine	
13	10126401	WASHER, #6 External Tooth Lock	
14	76425300	SHIELD, Servo Preamplifier	
15	73479800	HOUSING, Preamplifier	
16	73592482	SCREW, 4-40 x 1/4 Washer Hex Head	
17	47194100	PLATE, Preamplifier Mounting	
18		SPINDLE ASSEMBLY (See Figure 3-26)	
19	77824400	SHROUD Pack	
19	47437900	SHROUD Pack	
20	92004120	SCREW,4-40 x 5/16 Pan Head Machine	
21	10125801	WASHER, #4 Spring Lock	
22	93211105	WASHER, #4 Flat	
23	76427700	CATCH, Pack Access Cover	
23	76427702	CATCH, Pack Access Cover	
24		CARRIAGE AND COIL ASSEMBLY (See Figure 3-28)	
25	92004121	SCREW, 6-32 x 1/4 Pan Head Machine	
26	##	SWITCH, Pack Cover (A3S3)	
27	94279415	BUTTON, Plug Recessed Head	
28		RAIL BRACKET ASSEMBLY (See Figure 3-27)	

INDEX NO	PART NO	PART DESCRIPTION	NOTE
3-25		DECK ASSEMBLY (A3) (Contd)	
29	94060003	CHANNEL, Rubber	
30	##	SERVO PREAMPLIFIER (A3A05) (_ZQN Card)	
31	82335100	DEFLECTOR, Air	Used on units W/2 card power supply only
32	10127111	SCREW, 6-32 x 1/4 Pan Head Machine	Used on units W/2 card power supply only
33	10125605	WASHER, #6 Flat	Used on units W/2 card power supply only
34	10125803	WASHER, #6 Spring Lock	Used on units W/2 card power supply only
35	73029000	COVER, Connector Pin (ITEMS LISTED BELOW THIS NOTE ARE NOT PART OF THE DECK ASSEMBLY)	
36	93342098	SCREW, Nylon	
37	93564042	WASHER, Nylon	
38		HEAD ASSEMBLIES	
	##	HEAD ARM ASSEMBLY, Data Head 1 2 4	
	##	HEAD ARM ASSEMBLY, Data Head 1 2 4	
	##	HEAD ARM ASSEMBLY, Servo Head	
	75017500	SCREW, Head Arm Mounting (Part of HEAD ARM ASSEMBLY)	
39	51906006	CONNECTOR, Plug (P200) (Part of W3)	
		(ASSOCIATED PARTS)	
		CONTACT, Socket	
		- - - * - - -	
40	95643225	CONNECTOR, Quick Connect (S3) (Part of W3)	
41	94309802	POD, Terminal (PA) (Part of W3)	
		(ASSOCIATED PARTS)	
	93747125	RECEPTACLE, Slide On	
		- - - * - - -	
42	94261803	BODY, Connector (P8) (Part of W3)	
		(ASSOCIATED PARTS)	
	94245601	CONTACT, Socket (24-26 Gauge)	
	94245606	CONTACT, Socket (20-22 Gauge)	
		- - - * - - -	

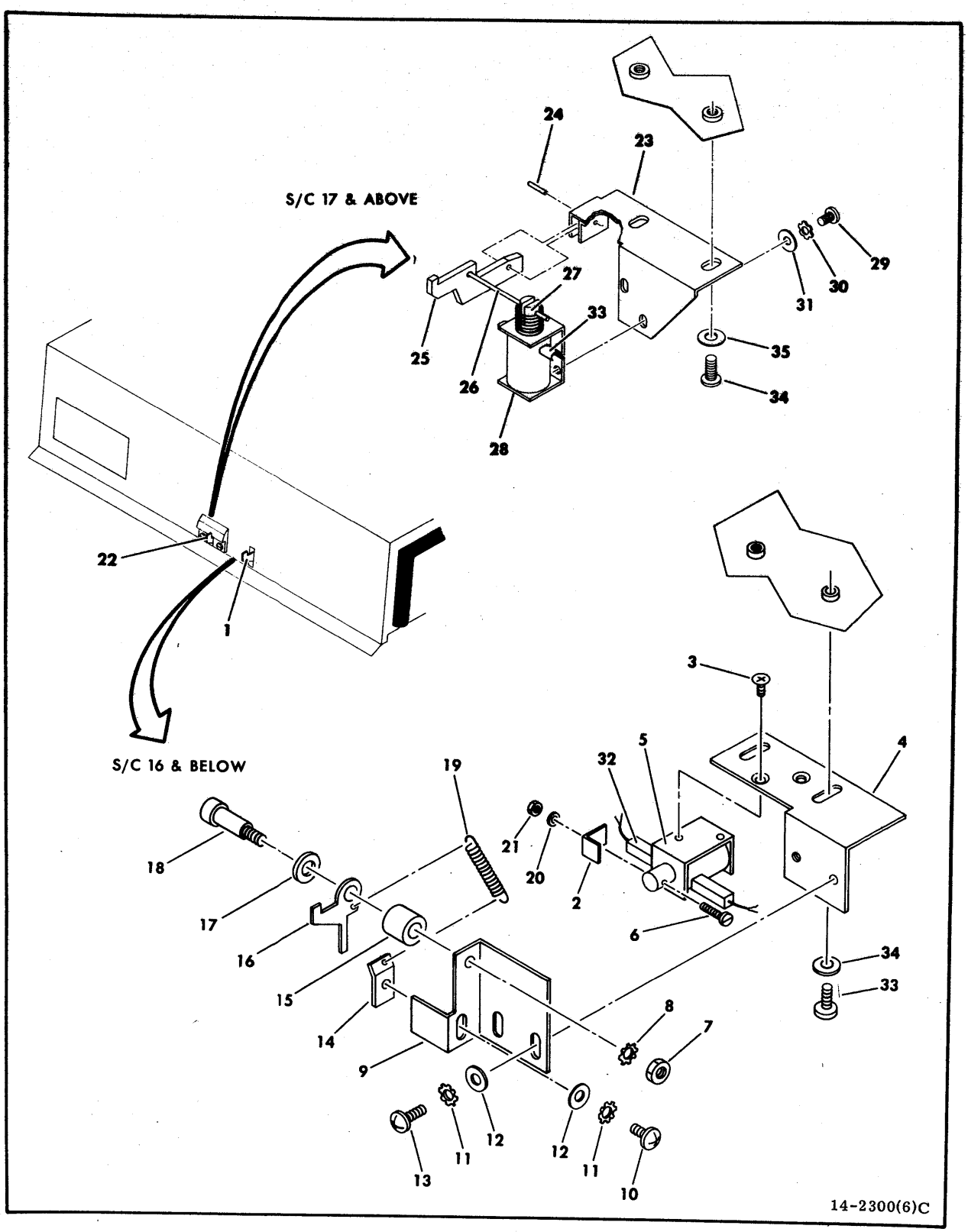

Figure 3-25. Deck Assembly (Sheet 2)

INDEX NO	PART NO	PART DESCRIPTION	NOTE
3-25		DECK ASSEMBLY (A3) (Sheet 2)	
1	83243401	INTERLOCK ASSEMBY (A3L3)	S/C 16 & Blw
2	76420500	STOP, Interlock	
3	10125711	SCREW, 6-32 x 3/16 Flat	
4	76422000	BRACKET, Interlock Mounting	
5	94237900	SOLENOID, DC	
6	10127314	SCREW, 2-56 x 1/2 Pan Head Machine	
7	10125107	NUT, 10-24 Hex	
8	10126403	WASHER, #10 External Tooth Lock	
9	76422100	BRACKET, Interlock Pivot	
10	10127122	SCREW, 8-32 x 1/2 Pan Head Machine	
11	10126402	WASHER, #8 External Tooth Tooth	
12	10125606	WASHER, #8 Flat	
13	10127123	SCREW, 8-32 x 1/2 Pan Head Machine	
14	76422200	BRACKET, Interlock Spring	
15	76421901	SPACER, Interlock	
16	76421700	LATCH, Interlock	
17	76421900	SPACER, Interlock	
18	92541005	SCREW, 10-24 x 5/8 Shoulder	
19	46819300	SPRING, Extension	
20	10125800	WASHER, #2 Spring Lock	
21	10125102	NUT, 2-56 Hex	
22	83281500	INTERLOCK ASSEMBLY (A3L3)	S/C 17 & Abv
23	83281400	BRACKET, Interlock Mounting	
24	93533079	PIN, Roll	
25	83281300	LATCH, Interlock	
26	93533117	PIN, Roll	
27	82338100	SPRING, Compression	
28	94237900	SOLENOID, DC	
29	10127111	SCREW, 6-32 x 1/4 Pan Head Machine	
30	10126401	WASHER, #6 External Tooth Lock	
31	10125605	WASHER, #6 Plain	
32	94309801	POD, Terminal (A3L1) (Part of W3)	
		(ASSOCIATED PARTS)	
33	93747060	RECEPTACLE, Slide On	
		- - - * - - -	
34	93749200	SCREW, 8-32 x 3/8 Phillips Pan Head Machine	
35	10125606	WASHER, #8 Flat	

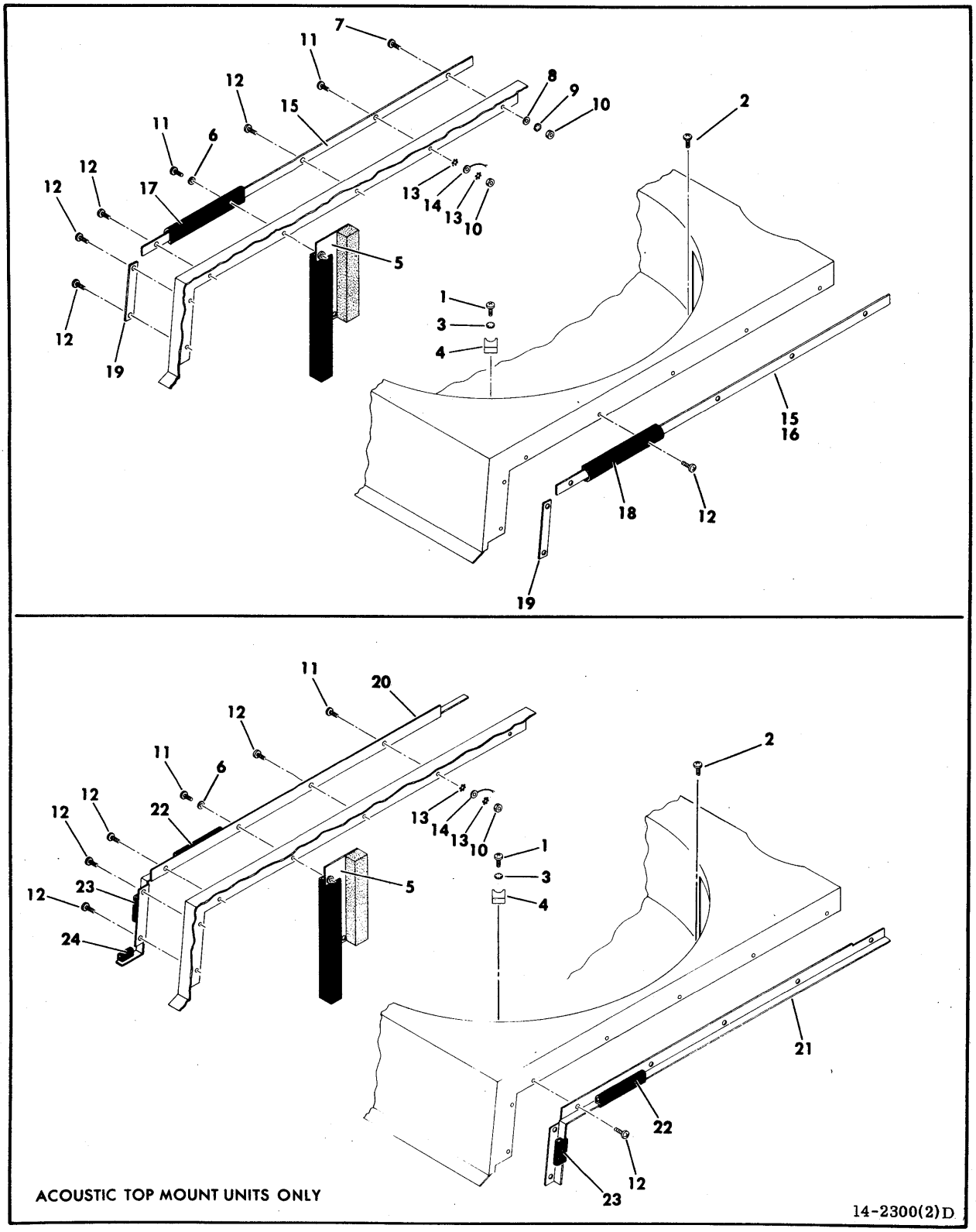

Figure 3-25. Deck Assembly (Sheet 3)

INDEX NO	PART NO	PART DESCRIPTION	NOTE
3-25		DECK ASSEMBLY (Sheet 3)	
1	10127113	SCREW, 6-32 x 3/8 Pan Head Machine	
2	92001702	SCREW, 6-32 x 5/16 Washer Pan Head	
3	10126103	WASHER, #6 Internal Tooth Lock	
4	76031600	BLOCK, Stop	
5		PLATE, Shroud Seal (See Sheet 6 For Part Number)	
		(ITEMS LISTED BELOW THIS NOTE ARE NOT PART OF THE DECK ASSEMBLY)	
6	10125803	WASHER, #6 Spring Lock	
7	10127114	SCREW, 6-32 x 1/2 Pan Head Machine	Nonacoustic Units Only
8	10125605	WASHER, #6 Flat	Nonacoustic Units Only
9	10126103	WASHER, #6 Internal Lock	Nonacoustic Units Only
10	10125105	NUT, 6-32 Hex	
11	10127113	SCREW, 6-32 x 3/8 Pan Head Machine	
12	95655516	SCREW, 6-20 x 3/8 Sheet Metal	
13	10126401	WASHER, #6 External Tooth Lock	
14		CABLE, Ground (See Sheet 5 For Part Number)	
15	76423401	STIFFENER, Gasket (Left and Right)	Nonacoustic Units
15	76423402	STIFFENER, Gasket (Left)	Acoustic Drawer Units, S/C 18 & Blw
15	76423405	STIFFENER, Gasket	Acoustic Drawer Units, S/C 19 & Abv

INDEX NO	PART NO	PART DESCRIPTION	NOTE
3-25		DECK ASSEMBLY (Sheet 3) (Contd)	
16	76423401	STIFFENER, Gasket (Right)	Acoustic Drawer Units, S/C 18 & Blw
16	76423404	STIFFENER, Gasket	Acoustic Drawer Units, S/C 19 & Abv
17	76423500	GASKET, Shroud Side (Left)	
18	76423501	GASKET, Shroud Side (Right)	
19	76423400	STIFFENER, Gasket	S/C 18 & Blw
19	76423403	STIFFENER, Gasket	S/C 19 & Abv
20	77561200	FLANGE, Left Shroud	
21	77561100	FLANGE, Right Shroud	
22	76429327	SEAL, Acoustic	
23	76429328	SEAL, Acoustic	
24	76429329	SEAL, Acoustic	

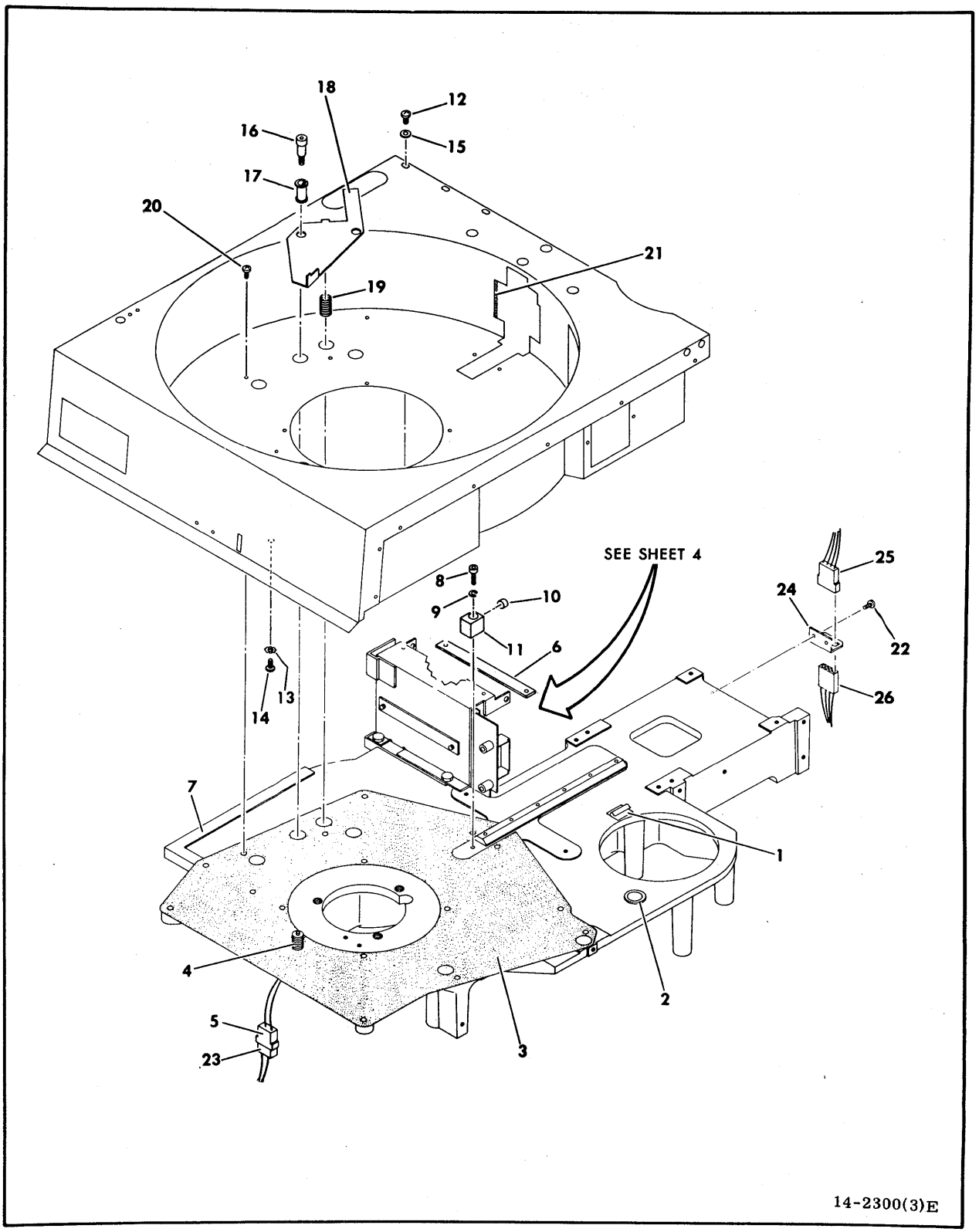

Figure 3-25. Deck Assembly (Sheet 4)

INDEX NO	PART NO	PART DESCRIPTION	NOTE
3-25		DECK ASSEMBLY (Sheet 4)	
1	94241008	CLIP, Adhesive Back Cable	
2	15012412	BUSHING, Snap-In	
3	77824500	GASKET, Shroud	
4	##	SPEED SENSOR ASSEMBLY (A3L1) (Speed Transducer)	
5	94368004	CONNECTOR, Housing (J202) (ASSOCIATED PARTS)	
	93942023	CONTACT, Pin	
		- - - * - - -	
6	82337900	PLATE, Nut	S/C 17 & Abv
7	77825600	DECK	
8	10126227	SCREW, 8-32 x 5/8 Hex Head Socket	
9	10125804	WASHER, #8 Spring Lock	
10	75070700	STOP, Bumper	
11	75070800	BLOCK, Stop	
12	93749158	SCREW, 6-32 x 1/4 Washer Pan Head	S/C 16 & Blw
12	10127335	SCREW, 6-32 x 1/2 Washer Pan Head	S/C 17 & Abv
13	10126104	WASHER, #8 Internal Tooth Lock	Units W/O Interlock Assy Only
14	10127120	SCREW, 8-32 x 1/4 Pan Head Machine	Units W/O Interlock Assy Only
15	10125605	WASHER, #6 Flat	
16	92541001	SCREW, 10-24 x 3/8 x 1/2 Shoulder	
17	92373005	NYLINER, Snap-In	
18	75073700	LOCK, Brake, Spindle	
19	94205789	SPRING, Compression	
20	92001702	SCREW, 6-32 x 5/16 Washer Pan Head	
21	94001102	TAPE, Foam	

INDEX NO	PART NO	PART DESCRIPTION	NOTE
3-25		DECK ASSEMBLY (Sheet 4) (Contd) (ITEMS LISTED BELOW THIS NOTE ARE NOT PART OF THE DECK ASSEMBLY)	
22	93749160	SCREW, 6-32 x 5/16 Washer Pan Head	
23	93947005	CONNECTOR, Socket Housing (P202) (Part of W3)	
		(ASSOCIATED PARTS)	
24	76426700	BRACKET, Connector	
25		CONNECTOR (See Magnet Assembly For Part Number)	
26	93947009	CONNECTOR, Socket Housing (J22) (Part of W2)	
		(ASSOCIATED PARTS)	
	93943000	CONTACT, SOCKET	

- - - * - - -

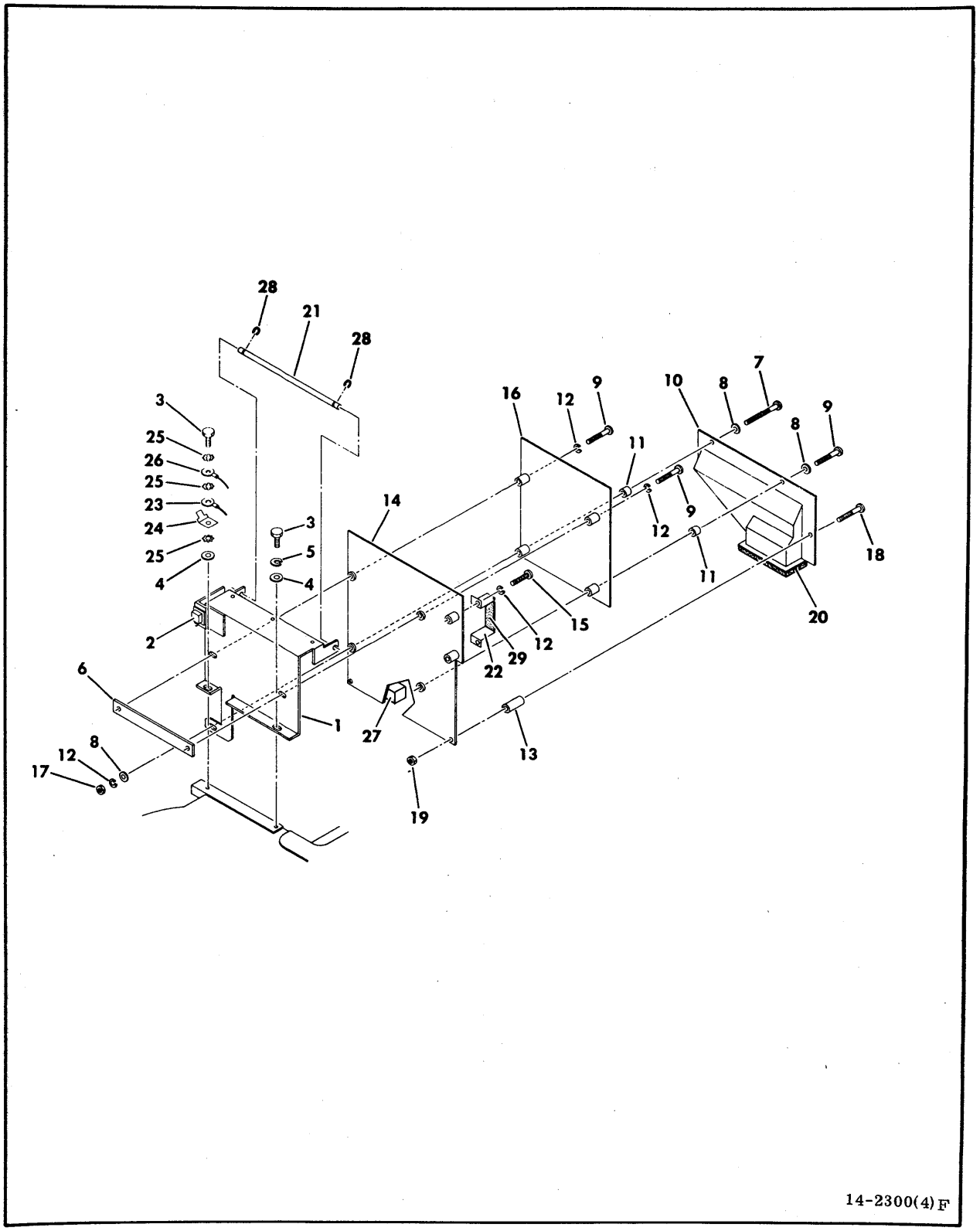

Figure 3-25. Deck Assembly (Sheet 5)

INDEX NO	PART NO	PART DESCRIPTION	NOTE
3-25		DECK ASSEMBLY (SHEET 5)	
1	83275400	BRACKET, Pivot	S/C 16 & Blw
1	83280900	BRACKET, Pivot	S/C 17 & Abv
2	51805800	BUMPER, Self-Sticking	
3	10126226	SCREW, 8-32 x 1/2 Socket Hex Head	
4	10125606	WASHER, #8 Flat	
5	10125804	WASHER, #8 Spring Lock	
6	75173310	PLATE, Nut	
7	92742176	SCREW, 6-32 x 1-1/2 Pan Head Machine	
8	10125605	WASHER, #6 Flat	
9	10127118	SCREW, 6-32 x 1 Pan Head Machine	
10	47171600	AIR DUCT, Logic Chassis	
11	93109210	STANDOFF, Spacer Round	
12	10125803	WASHER, #6 Spring Lock	
13	93109271	STANDOFF, Spacer	
14	##	COMPONENT ASSEMBLY (A3A02), Type _ZJN,	
15	10127116	SCREW, 6-32 x 3/4 Pan Head Machine	
16	##	COMPONENT ASSEMBLY (A3A03), Type _ZKN,	
17	10125105	NUT, 6-32 Hex	
18	10127110	SCREW, 4-40 x 1-1/4 Pan Head Machine	
19	10125103	NUT, 4-40 Hex	
20	47201500	GASKET, Air Plenum	
		(ITEMS LISTED BELOW THIS NOTE ARE NOT PART OF THE DECK ASSEMBLY)	
21	75065300	ROD, Logic Chassis Support	S/C 16 & Blw
22	75244500	BRACKET, Connector Support	
23	95604057	TERMINAL, Ring Tongue (Part of W3)	Not used on all units
24	94274105	TERMINAL, Quick Connect	

INDEX NO	PART NO	PART DESCRIPTION	NOTE
3-25		DECK ASSEMBLY (SHEET 5) (Contd)	
25	10126402	WASHER, #8 External Tooth Lock	
26	94281467	CABLE, Ground (Deck to Shroud)	
27	94261810	BODY, Connector (P101) (Part of W4)	
		(ASSOCIATED PARTS)	
	94245602	CONTACT, Socket	
	94245607	CONTACT, Socket	
	94245604	CONTACT, Socket	
		- - - * - - -	
28	92033237	RING, Retaining	S/C 16 & Blw
29	94276607	TAPE, Foam	

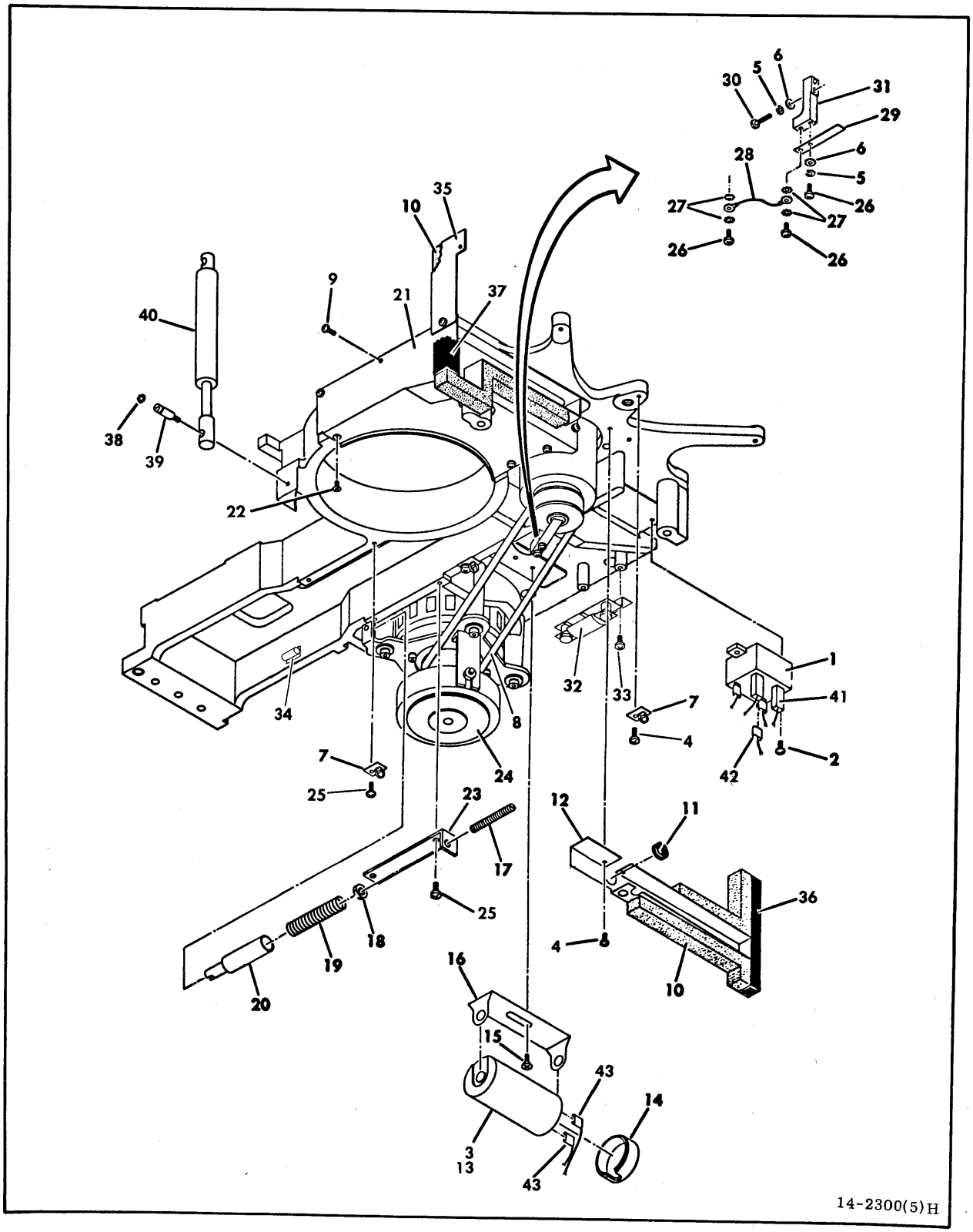

Figure 3-25. Deck Assembly (Sheet 6)

INDEX NO	PART NO	PART DESCRIPTION	NOTE
3-25		DECK ASSEMBLY (Sheet 6)	
1	##	SWITCH, Solid State, AC (A3K5) (Start Triac)	
2	93660077	SCREW, 8-32 x 3/8 Pan Head Machine	
3	83245301	RESISTOR	
4	93749160	SCREW, 6-32 x 5/16 Pan Head Machine	
5	10125803	WASHER, #6 Spring Lock	
6	10125605	WASHER, #6 Flat	
7	94277503	BASE, Mounting	
8	##	BELT, Flat Drive	
9	92001702	SCREW, 6-32 x 5/16 Washer Pan Head	
10	94001133	TAPE, Foam	
11	95649704	GROMMET	
12	76429800	BAFFLE, Air	S/C 16 & Blw
12	83277900	BAFFLE, Air	S/C 17 & Abv
13	##	CAPACITOR, Drive Motor AC (A3C6)	
14	94260504	ACCESSORIES, Plastic Capacitor	
15	10125735	SCREW, 10-24 x 3/8 Flat Head	
16	94260501	ACCESSORIES, Steel Capacitor	60 Hz
16	94260502	ACCESSORIES, Steel Capacitor	50 Hz
17	47172300	ROD, Motor Adjusting	
18	92071004	NUT, 1/4-20 Self Tapping Hex	
19	47201300	SPRING, Compression	
20	47172401	GUIDE, Spring	
21	76021200	INLET, Blower	S/C 16 & Blw
21	83277800	INLET, Blower	S/C 17 & Abv
22	10125712	SCREW, 6-32 x 1/4 Flat Head	
23	47172500	BRACKET, Adjusting Rod	
24		DRIVE MOTOR (A3DM1) AND BRAKE (A3HB1) ASSEMBLIES (See Figure 3-30)	
25	10127134	SCREW, 10-24 x 3/4 Pan Head Machine	
26	10127113	SCREW, 6-32 x 3/8 Pan Head Machine	
27	10126401	WASHER, #6 External Tooth Lock	
28	94369522	CABLE, Ground	

INDEX NO	PART NO	PART DESCRIPTION	NOTE
3-25		DECK ASSEMBLY (Sheet 6) (Contd)	
29	76408000	GROUND, Spring	
30	10127115	SCREW, 6-32 x 5/8 Pan Head Machine	
31	75069800	HOLDER, Ground Spring	Used on units
32	83289900	RESISTOR ASSEMBLY	W/2 card power supply only
33	93749162	SCREW, 6-32 x 3/8 Pan Head Machine	Used on units W/2 card power supply only
34	94241018	CLIP, Cable	
		(ITEMS LISTED BELOW THIS NOTE ARE NOT PART OF THE DECK ASSEMBLY)	
35	76424600	PLATE, Shroud Seal	
36	76429330	SEAL, Acoustical	
36	76429318	SEAL, Acoustical	
37	76429331	SEAL, Acoustical	
37	76429319	SEAL, Acoustical	
38	92033221	RING, Retaining	
39	73229002	STUD	
40	94354903	SPRING, Gas	
41	94309802	POD (Part of W3)	
42	93747002	RECEPTACLE, Slide On	
43		TERMINAL, Flag Quick Connect (See Drive Motor and Brake Assemblies for Part Number)	

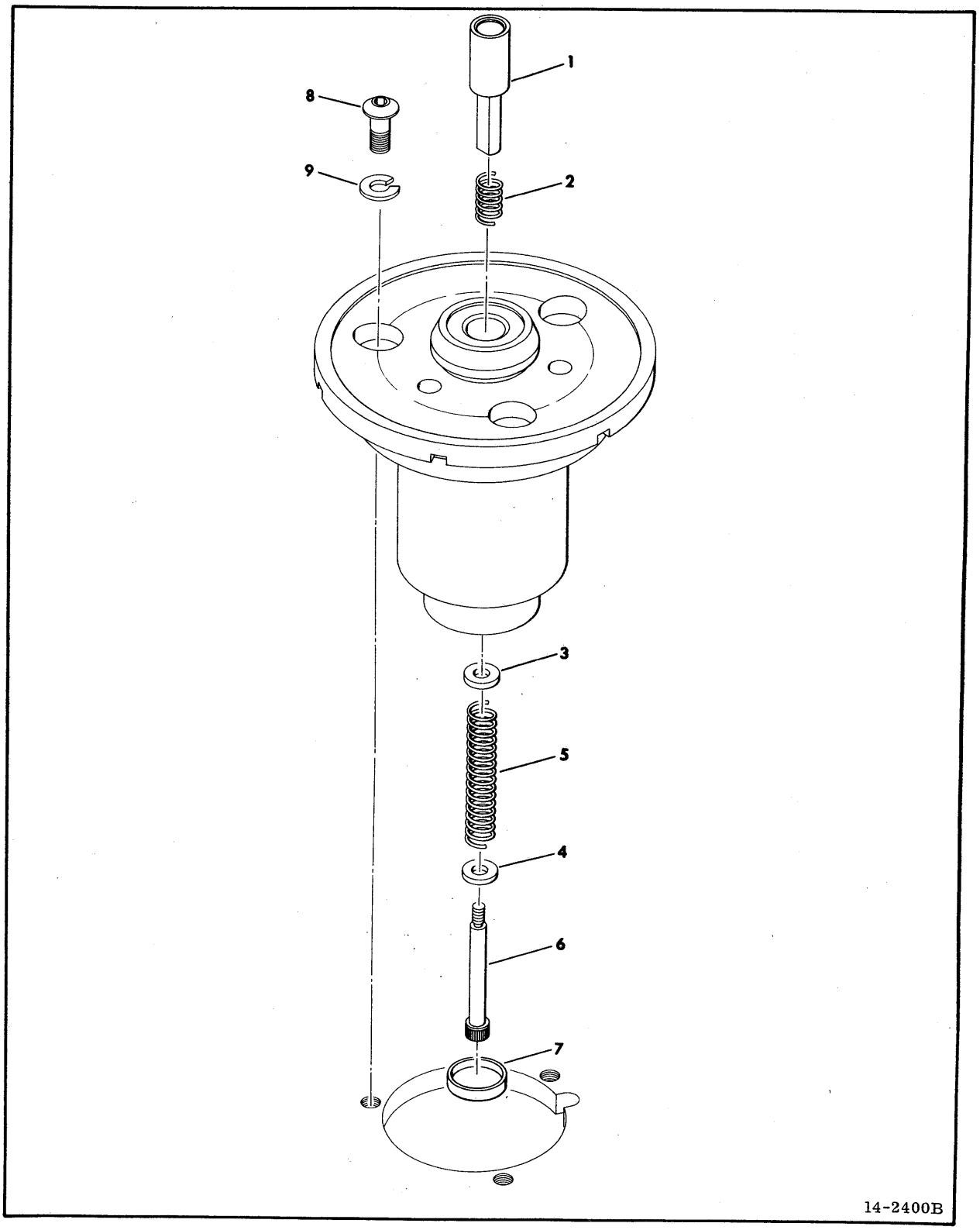

Figure 3-26. Spindle Assembly

INDEX NO	PART NO	PART DESCRIPTION	NOTE
3-26	##	SPINDLE ASSEMBLY	
1	75074200	LOCKSHAFT, Spindle	BK4XX
1	76425600	LOCKSHAFT, Spindle	BK5XX
2	75074600	SPRING, Lockshaft Compression	
3	75074000	WASHER, Stainless Steel Lockshaft	
4	75072700	SPRING, Compression	
4	75074001	WASHER, Brass Lockshaft	
5	92541059	SCREW, 10-24 x .38 x 2.50 Shoulder	
6	75259000	SHAFT, End Seal	
		(ITEMS LISTED BELOW THIS NOTE ARE NOT PART OF THE SPINDLE ASSEMBLY)	
7	92723396	SCREW, Button Socket Head	
8	10125807	WASHER, 5/16 Spring Lock	

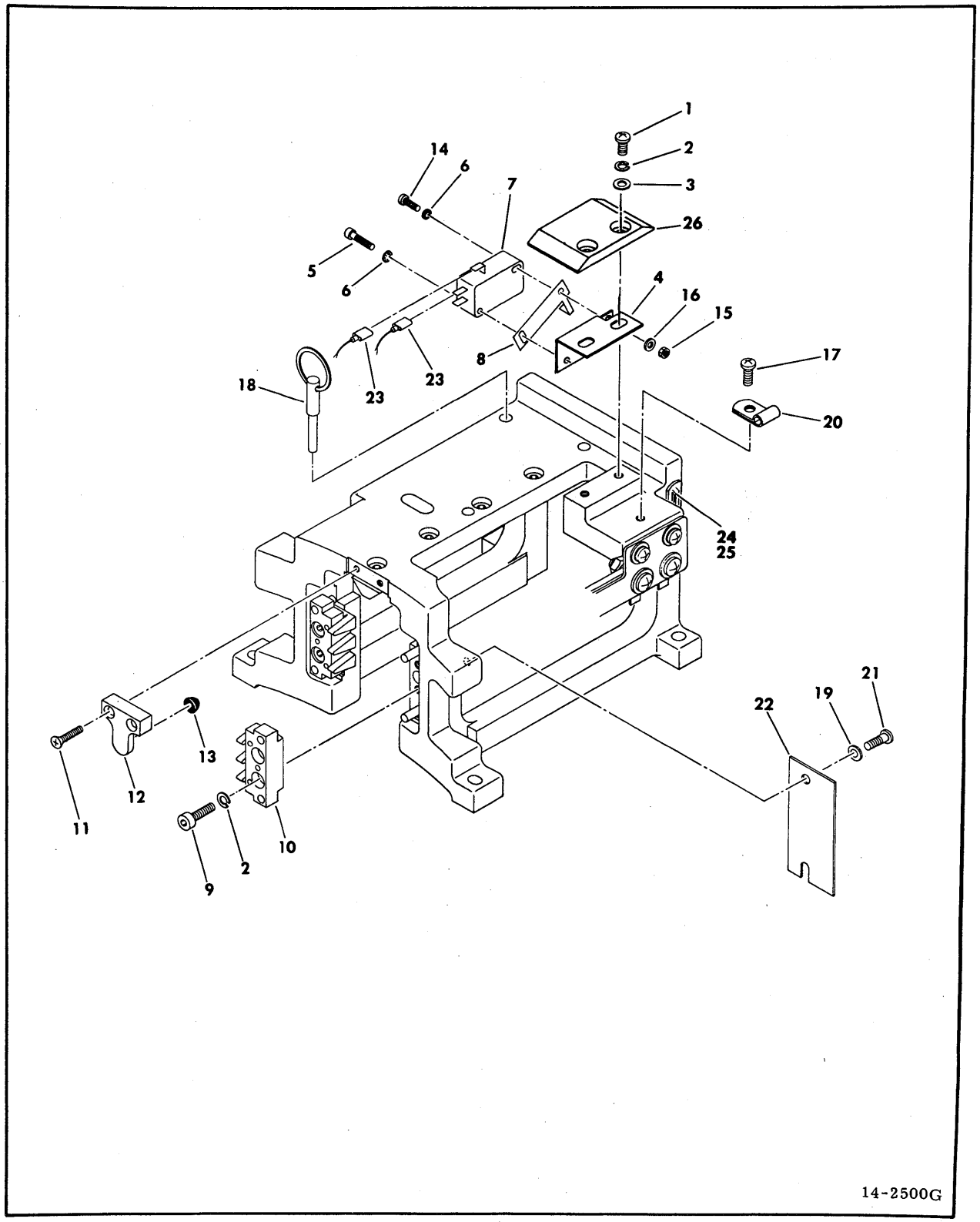

Figure 3-27. Rail Bracket Assembly

INDEX NO	PART NO	PART DESCRIPTION	NOTE
3-27	NFR	RAIL BRACKET ASSEMBLY	
1	10127111	SCREW, 6-32 x 1/4 Pan Head Machine	
2	10125803	WASHER, #6 Spring Lock	
3	10125605	WASHER, #6 Flat	
4	76420400	BRACKET, Switch Mounting	S/C 24 & Below
4	82376300	BRACKET, Switch Mounting	S/C 25 & Above
5	10127105	SCREW, 4-40 x 1/2 Pan Head Machine	
6	10126101	WASHER, #4 Internal Tooth Lock	
7	##	SWITCH, Mini Integral Actuator (A3S2)	
8	46807000	BRACKET, Pretravel Adjustment	
9	10126219	SCREW, 6-32 x 1/2 Socket Hex Head	
10	75015600	CAM, Tower	
11	10125705	SCREW, Flat Head	
12	75071100	BLOCK, Upper Stop	
13	75070700	STOP, Bumper	
14	10127106	SCREW, 4-40 x 5/8 Pan Head	S/C 25 & Above only
15	10125103	NUT, 4-40	S/C 25 & Above only
16	10125603	WASHER, #4 Flat	S/C 25 & Above only
		(ITEMS LISTED BELOW THIS NOTE ARE NOT PART OF THE BRACKET ASSEMBLY)	
17	10127112	SCREW, 6-32 x 5/16 Pan Head Machine	
18	76425202	CARRIAGE LOCKING PIN AND RING ASSEMBLY	
19	10125605	WASHER, #6 Flat	
20	92602001	CLAMP, Nylon Cable	
21	93749162	SCREW, 6-32 x 3/8 Washer Pan Head	
22	75243202	COMPONENT ASSEMBLY, Type _ZGN	
23	95643227	TERMINAL, Quick Connect (S2) (Part of W3)	S/C 16 & Below
23	93747017	TERMINAL, 6-32 x 1/4 Quick Connect	S/C 17 & Above
24	93749158	SCREW, Pan Head Washer Machine	
25	94277503	BASE, Mounting	
26	73023600	GUARD, Switch	

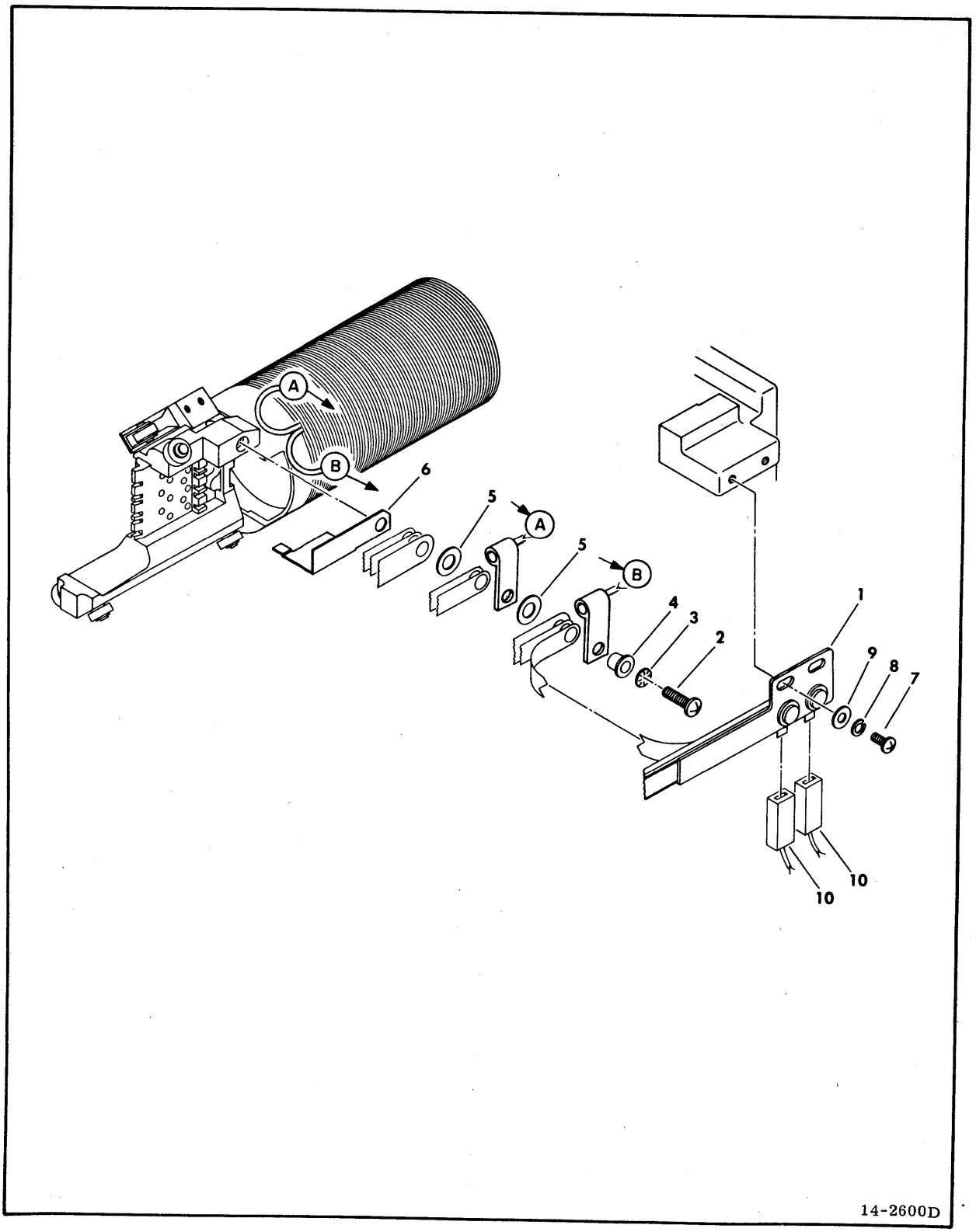

Figure 3-28. Carriage And Coil Assembly

INDEX NO	PART NO	PART DESCRIPTION	NOTE
3-28	NFR	CARRIAGE AND COIL ASSEMBLY (A3VC1)	
1	76426800	FLEX LEAD ASSEMBLY	
2	10127124	SCREW, 8-32 x 5/8 Pan Head Machine	
3	10126104	WASHER, #8 Internal Tooth Lock	
4	70728902	SPACER	
5	93564002	WASHER, Nylon	
6	82375800	RETAINER, Flex Lead	
		(ITEMS LISTED BELOW THIS NOTE ARE NOT PART OF THE CARRIAGE AND COIL)	
7	10127112	SCREW, 6-32 x 5/16 Pan Head Machine	
8	10125803	WASHER, #6 Spring Lock	
9	10125605	WASHER, #6 Flat	
10	94309802	POD, Terminal (VC1 & VC2) (Part of W3) (ASSOCIATED PARTS)	
	93747125	RECEPTACLE, Slide On	

- - - * - - -

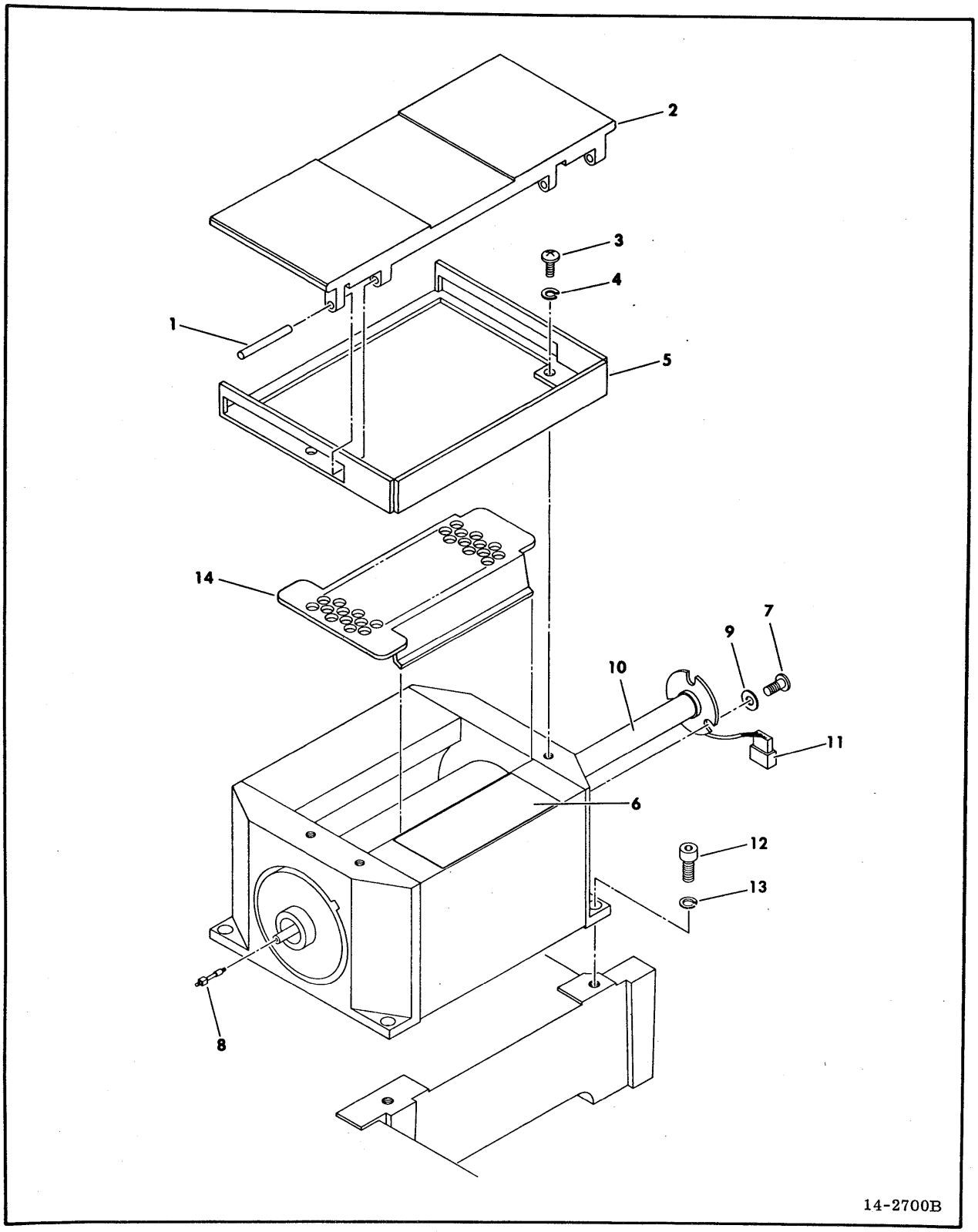

Figure 3-29. Magnet Assembly

INDEX NO	PART NO	PART DESCRIPTION	NOTE
3-29	47200700	MAGNET ASSEMBLY	S/C 16 & Blw
3-29	47200701	MAGNET ASSEMBLY	S/C 17-25
3-29	47200702	MAGNET ASSEMBLY	S/C 26 & Abv
1	93530148	PIN, 1.38 x .125 Roll	S/C 16 & Blw
2	47171100	BRACKET, Logic Chassis Mounting	S/C 16 & Blw
3	10127122	SCREW, 8-32 x 3/4 Pan Head Machine	S/C 16 & Blw
4	10125804	WASHER, #8 Spring Lock	S/C 16 & Blw
5	83254800	BRACKET, Logic Chassis Slide	S/C 16 & Blw
6	92006904	PLATE, Bilingual Magnetic Field Warning	
		(ITEMS LISTED BELOW THIS NOTE ARE NOT PART OF THE MAGNET ASSEMBLY)	
7	93749162	SCREW, 6-32 x 3/8 Washer Pan Head	
8	76425801	ROD, Extension	
9	10125605	WASHER, #6 Flat	
10	##	TRANSDUCER ASSEMBLY (A3L2)	
11	93948008	CONNECTOR, Pin Housing (4 Pin)	
		(ASSOCIATED PARTS)	
	93942014	CONTACT, Pin	
		- - - * - - -	
12	10126234	SCREW, 10-24 x 1/2 Socket Hex Head	
13	10125805	WASHER, #10 Spring Lock	
14	75257100	COVER, Magnet	

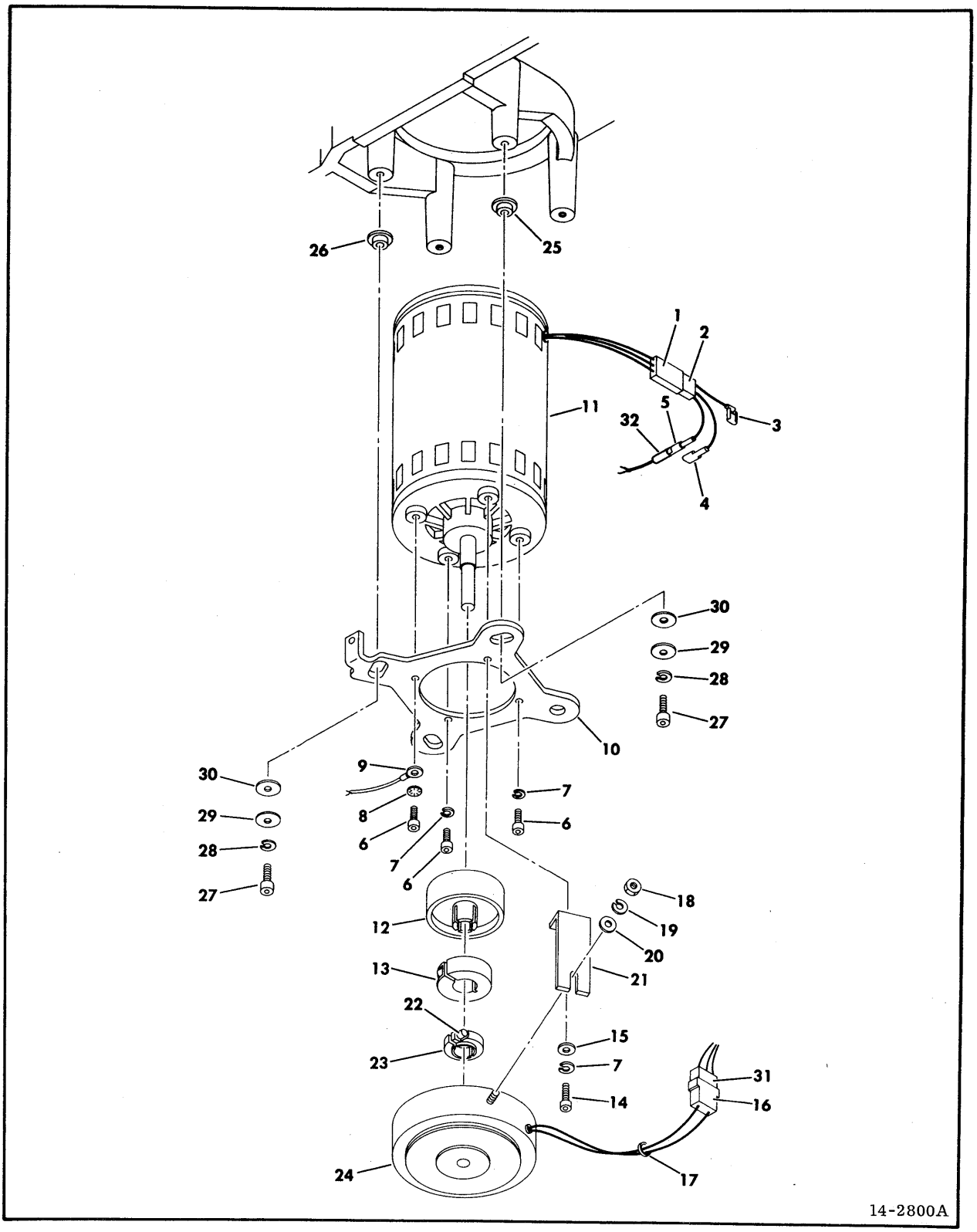

Figure 3-30. Drive Motor And Brake Assemblies

INDEX NO	PART NO	PART DESCRIPTION	NOTE
3-30		DRIVE MOTOR AND BRAKE ASSEMBLIES	
	##	DRIVE MOTOR ASSEMBLY (A3DM1)	
1	93948003	CONNECTOR, Pin Housings (3 Pin) (J304)	
		(ASSOCIATED PARTS)	
	93942002	CONTACT, Pin	
		- - - * - - -	
2	93947004	CONNECTOR, Socket Housing (P304)	
		(ASSOCIATED PARTS)	
	93943002	CONTACT, Socket	
		- - - * - - -	
3	94374101	TERMINAL, Flag Quick Connect (Part of W6)	
4	93747125	CONNECTOR, Quick Connect (Part of W6)	
5	93948009	CONNECTOR, Pin Housing (J302) (Part of W6)	
		(ASSOCIATED PARTS)	
	93942002	CONTACT, Pin	
		- - - * - - -	
6	10126226	SCREW, 8-32 x 1/2 Socket Hex Head	
7	10125804	WASHER, #8 Spring Lock	
8	10125104	WASHER, #8 Internal Tooth Lock	
9	94281404	CABLE, Ground	
10	76409200	PLATE, Motor Mounting	
11	77398000	MOTOR, End Mounting	60 Hz
11	92003700	MOTOR, End Mounting	50 Hz
12	76051302	PULLEY, Motor	60 Hz
12	76051303	PULLEY, Motor	50 Hz
13	93287009	COLLAR, Shaft	
14	10126227	SCREW, 8-32 x 5/8 Socket Hex Head	
15	93210008	WASHER, #8 Flat	
	##	HYSTERESIS BRAKE ASSEMBLY (A3HB1)	
16	93948004	CONNECTOR, Pin Housing (2 Pin) (J303)	
		(ASSOCIATED PARTS)	
	93942023	CONTACT, Pin	
		- - - * - - -	
17	94277400	STRAP, Cable Tie	
18	10125107	Nut, 10-24 Hex	
19	10125805	WASHER, #10 Spring Lock	
20	10125607	WASHER, #10 Flat	

INDEX NO	PART NO	PART DESCRIPTION	NOTE
3-30		DRIVE MOTOR AND BRAKE ASSEMBLIES (Contd)	
21	73053200	BRACKET, Brake Mounting	
22	92005200	SCREW, 6-32 x 3/4 Socket Hex Head	
23	73044100	COLLAR, Brake Shaft	
24	94382300	BRAKE, Hysteresis	
		(ITEMS LISTED BELOW THIS NOTE ARE NOT PART OF THE DRIVE MOTOR AND BRAKE ASSEMBLIES)	
25	75062805	WASHER, Shoulder	
26	75062800	WASHER, Shoulder	
27	10126235	SCREW, 10-24 x 5/8 Socket Hex Head	
28	10125805	WASHER, #10 Spring Lock	
29	94047052	WASHER, Special	
30	75062400	WASHER, Insulator	
31	93947005	CONNECTOR, Socket Housing (Brake) (Part of W3)	
		(ASSOCIATED PARTS)	
	93943017	CONTACT, Socket	
32	93947010	CONNECTOR, Socket (P302) (Part of W1)	
		(ASSOCIATED PARTS)	
	93943002	CONTACT, Socket	

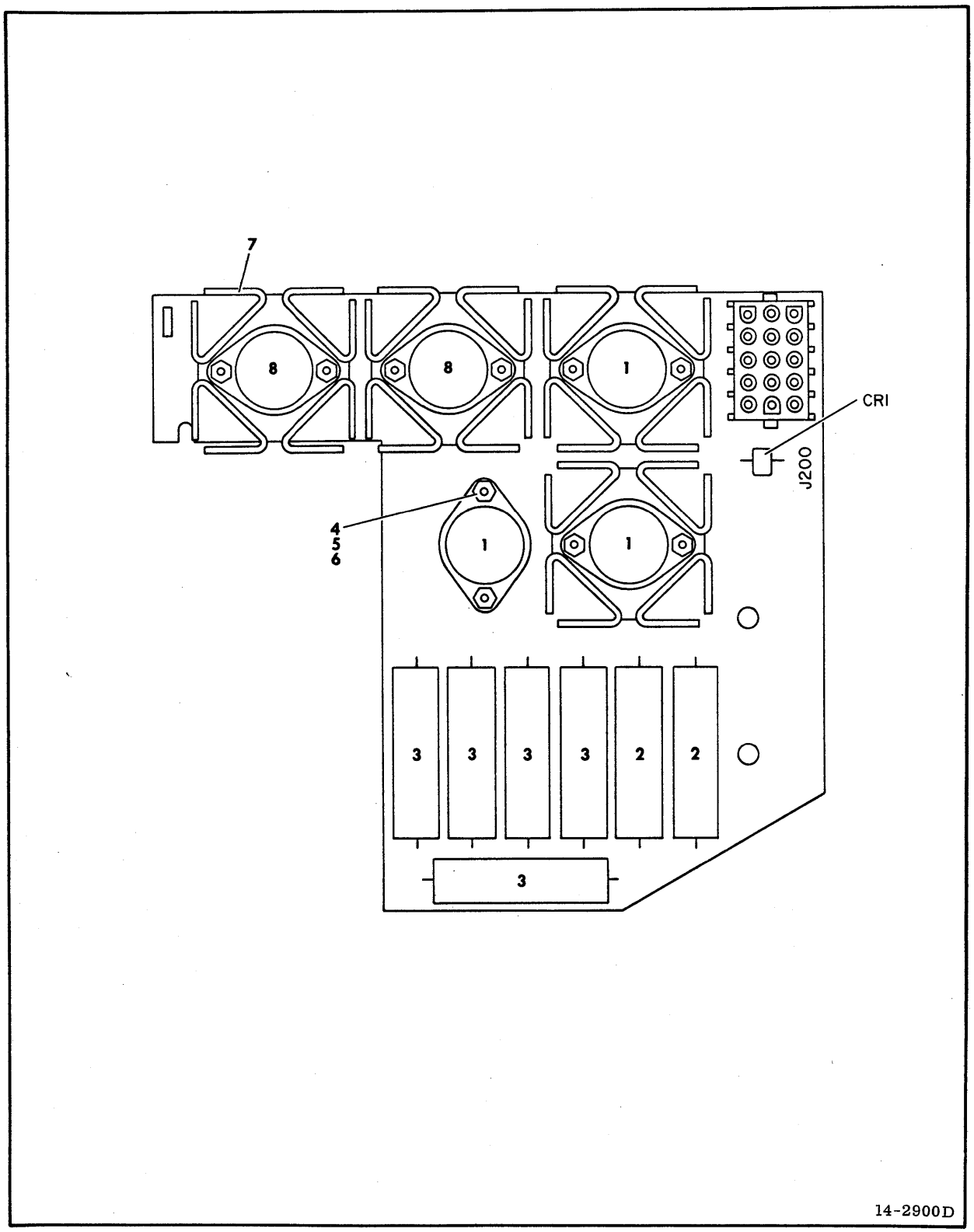

Figure 3-31. Power Amplifier

INDEX NO	PART NO	PART DESCRIPTION	NOTE
3-31	##	POWER AMPLIFIER, Component Assembly (Type _VTN) (A3A04)	
1	##	TRANSISTOR, SNPN-T03 Darlington Power (Q3, Q4, Q5)	
2	95597957	RESISTOR, 15 W 0.5 Ω ±1% Fixed Wire Wound	
3	95597900	RESISTOR, 15 W 1 Ω ±10% Fixed Wire Wound	
4	95510026	NUT, Hex	
5	10126103	WASHER, #6 Internal Tooth Lock	used on 5VTN card only
5	10125803	WASHER, #6 Spring Lock	used on AVTN card only
6	94388100	INSULATOR, Transistor Wafer	
7	94261001	HEAT SINK, Transistor	
8	##	TRANSISTOR, SPNP-T03 Darlington Power (Q1, Q2)	

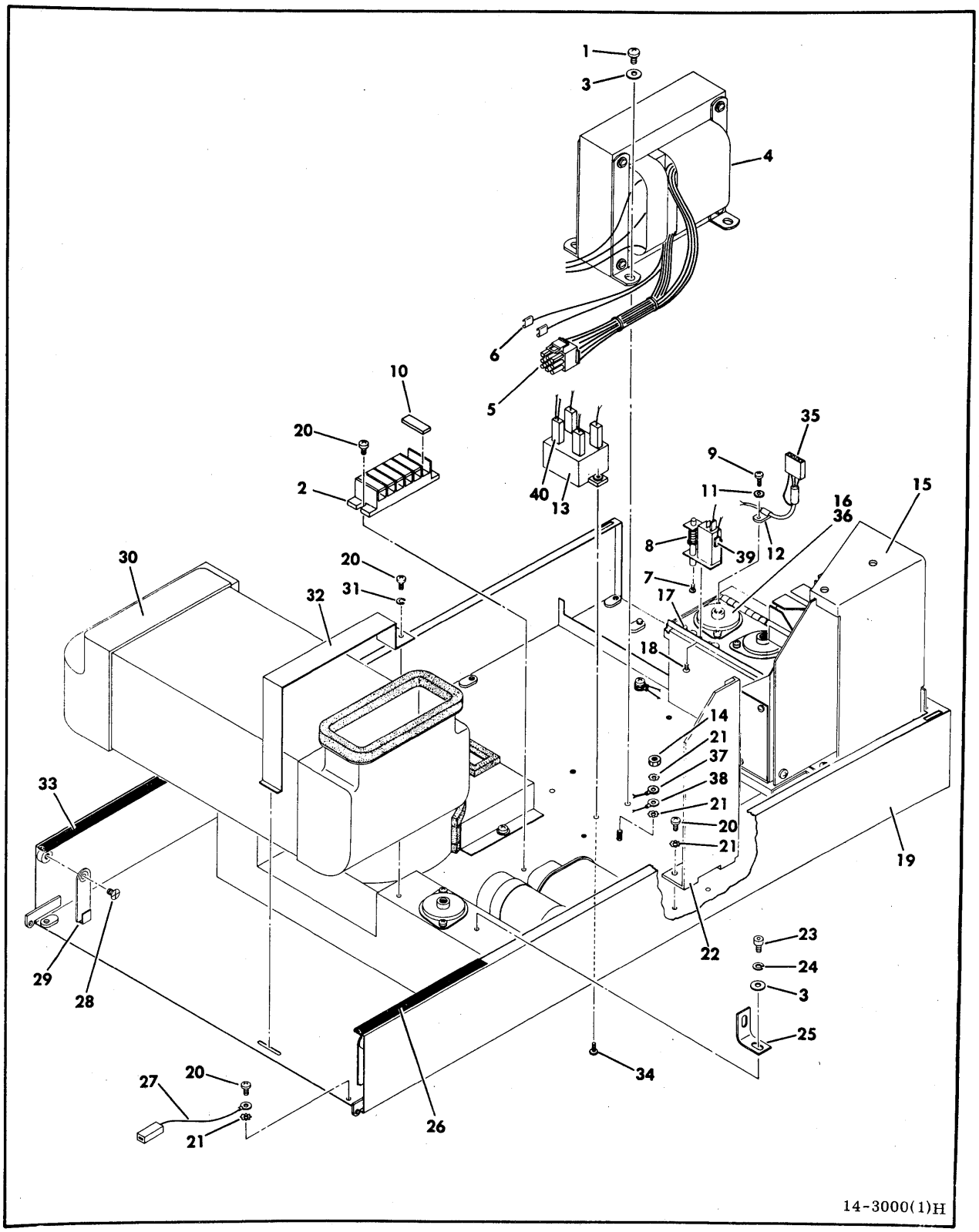

Figure 3-32. Base Assembly 471718XX (Sheet 1 of 4)

INDEX NO	PART NO	PART DESCRIPTION	NOTE
3-32	471718XX	BASE ASSEMBLY (A1) (Sheet 1 of 4)	Used on all units except BK4B7B, BK5A1K, BK5A7M, BK5A9U, BK5C1F
1	93755236	SCREW, 10-32 x 5/16 Washer Pan Head	
2	24501605	BLOCK, Terminal (A1TB1)	
3	10125607	WASHER, #10 Flat	
4	##	TRANSFORMER, Ferro (AC Power) (A1T1)	
5	51906004	CONNECTOR, (P100) (ASSOCIATED PARTS)	
	51906200	CONTACT, Socket	
		- - - * - - -	
6	95643212	TERMINAL, Quick Connect	
7	10127320	SCREW, 4-40 x 1/4 Pan Head Machine	
8	##	SWITCH, Deck Interlock (A1S4)	
9	93749162	SCREW, 6-32 x 3/8 Washer Pan Head	
10	24501658	COVER, Terminal Block	
11	10125605	WASHER, #6 Flat	
12	92602001	CLAMP, Nylon Cable	
13	##	SWITCH, Modified (Run Triac) (A1K1)	
14	10125106	NUT, 8-32 Machine Screw	
15		POWER SUPPLY ASSEMBLY (See Figure 3-31)	
16	94362600	MOUNT, Shock	
17	92633023	BUMPER, Grommet Type	
18	10125907	SCREW, 6-32 x 3/16 Flat Head Machine	
19	47172600	BASE	S/C 16 & Blw
19	47331900	BASE	50 Hz S/C 17-30, 60 Hz S/C 17-33
19	73057300	BASE	50 Hz S/C 31 & Abv, 60 Hz S/C 34 & Abv
20	10127121	SCREW, 8-32 x 5/16 Pan Head Machine	
21	10126402	WASHER, #8 External Tooth Lock	
22	47171700	GUIDE, Deck	
23	10126233	SCREW, 10-24 x 3/8 Socket Hex Head	
24	10125805	WASHER, #10 Spring Lock	

INDEX NO	PART NO	PART DESCRIPTION	NOTE
3-32	471718XX	BASE ASSEMBLY (A1) (Contd)	
25	75244900	BRACKET, Shock Lock	
26	76423801	GASKET, Base Side	
27	94281495	CABLE, Ground	
28	93826236	SCREW, 10-32 x 5/16 Self-Locking Pan Head	
29	76427600	ARM, Case Support	
30	##	FILTER, Air	
31	10125804	WASHER, #8 Spring Lock	
32	77475800	CLAMP, Air Filter	
33	76423800	GASKET, Base Side	
34	10125939	SCREW, 6-32 x 5/16 Flat Head Machine	
		(ITEMS LISTED BELOW THIS NOTE ARE NOT PART OF THE BASE ASSEMBLY)	
35		CONNECTOR, Socket Housing (See Deck Assembly Sheet 4, For Part Number)	
36	76419000	GASKET, Shock Mount	Used As Spacer Under Shock Mounts
37		CABLE, Ground (Drive Motor Ground Cable See Drive Motor and Brake Assembly For part Number)	
38	93541028	TERMINAL, Ring Tongue (Part of W3)	Not used on all units
39	94281327	RECEPTACLE, Slide On (A1S4) (Part of W3)	
40	94309802	POD, Terminal (A1K1) (Part of W1) (Part of W3)	
		(ASSOCIATED PARTS)	
	93747029	RECEPTACLE, Slide On	

- - - * - - -

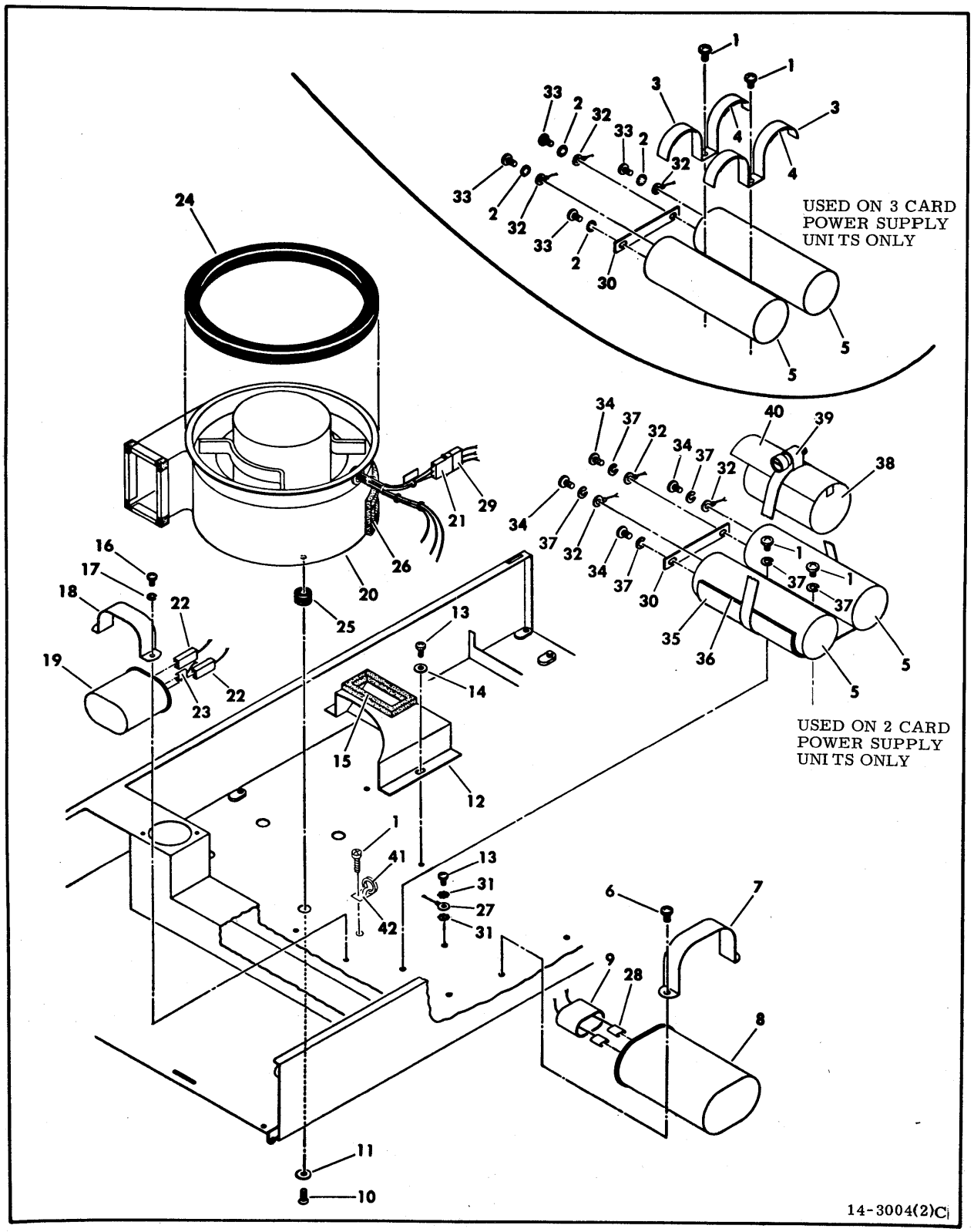

Figure 3-32. Base Assembly (Sheet 2)

INDEX NO	PART NO	PART DESCRIPTION	NOTE
3-32		BASE ASSEMBLY (Sheet 2)	
1	93755236	SCREW, 10-32 x 5/16 Washer Pan Head	
2	10126105	WASHER, #10 Internal Tooth Lock	
3	76417700	BRACKET, Capacitor	
4	95027403	TAPE, Double Adhesive Foam	
5	##	CAPACITOR, 50V 21000µf Electrolytic (Servo Capacitor) (A1C1, A1C2)	
6	93750198	SCREW, 8-32 x 5/16 Pan Head Machine	
7	95643601	CLAMP, Capacitor	
8	##	CAPACITOR, 660 VAC 6µf (Transformer Tuning Capacitor) (A1C8)	
9	95582501	BOOT, Double Entrance	
10	10125725	SCREW, 8-32 x 1/2 Flat Head	
11	76422601	WASHER, Special	
12	47173700	PLENUM, Logic Chassis Air	
13	10127121	SCREW, 8-32 x 5/16 Pan Head Machine	
14	10125606	WASHER, #8 Flat	
15	47201500	GASKET, Air Plenum	
16	10127120	SCREW, 8-32 x 1/4 Pan Head Machine	
17	10125804	WASHER, #8 Spring Lock	
18	92826001	BRACKET, Wraparound Capacitor	
19	##	CAPACITOR, 370 VAC 4µf (Blower Motor Start Capacitor) (A1C5)	
20	##	BLOWER ASSEMBLY (A1BM1)	
21	93948003	CONNECTOR, Pin Housing (J301)	
		(ASSOCIATED PARTS)	
	93942001	CONTACT, Pin (.080-.100 D1A)	
	93942002	CONTACT, Pin (.100-.130 D1A)	
		- - - * - - -	
22	94309802	POD, Terminal	
		(ASSOCIATED PARTS)	
	93747022	TERMINAL, Quick Connect (.080-.100 D1A)	
	93747125	TERMINAL, Quick Connect (.100-.130 D1A)	

INDEX NO	PART NO	PART DESCRIPTION	NOTE
3-32		BASE ASSEMBLY (Sheet 2)	
		- - - * - - -	
23	93747022	TERMINAL, Quick Connect	
24	76424400	GASKET, Blower	
25	94364000	GROMMET, Square Shoulder	
26	47201501	TAPE, 3/8 x 3/8 Foam	
27	93541018	TERMINAL, Ring Tongue (Chassis Ground) (Part of W1)	
28		TERMINAL, Quick Connect (See Base Assembly Sheet 1 For Part Number)	
29	93947004	CONNECTOR (P301) (Part of W1)	
		(ASSOCIATED PARTS)	
	93943002	CONTACT, Socket	
		- - - * - - -	
30	75244802	BAR, Buss	
31	10126402	WASHER, #8 External Tooth Lock	
32	95604039	CONNECTOR, Ring Tongue (C1 & C2) (Part of W3)	
33	93755238	SCREW, 10-32 x 3/8 Pan Head Machine	
34	10128141	SCREW, 1-32 x 5/16 Pan Head Machine	Used on 2 card power supply only
35	82330800	BRACKET, Capacitor	Used on 2 card power supply only
36	95027403	TAPE, Double Adhesive Foam	Used on 2 card power supply only
37	10125805	WASHER, #10 Spring Lock	Used on 2 card power supply only
38	##	CAPACITOR, 65 DC 21000 µF (Servo) (A1C3)	Used on 2 card power supply only
39	94275215	CLAMP, Hose	Used on 2 card power supply only
40	82338200	BRACKET, Capacitor Protection	Used on 2 card power supply only
41	94277400	STRAP, Cable Tie	
42	94277503	BASE, Mounting	

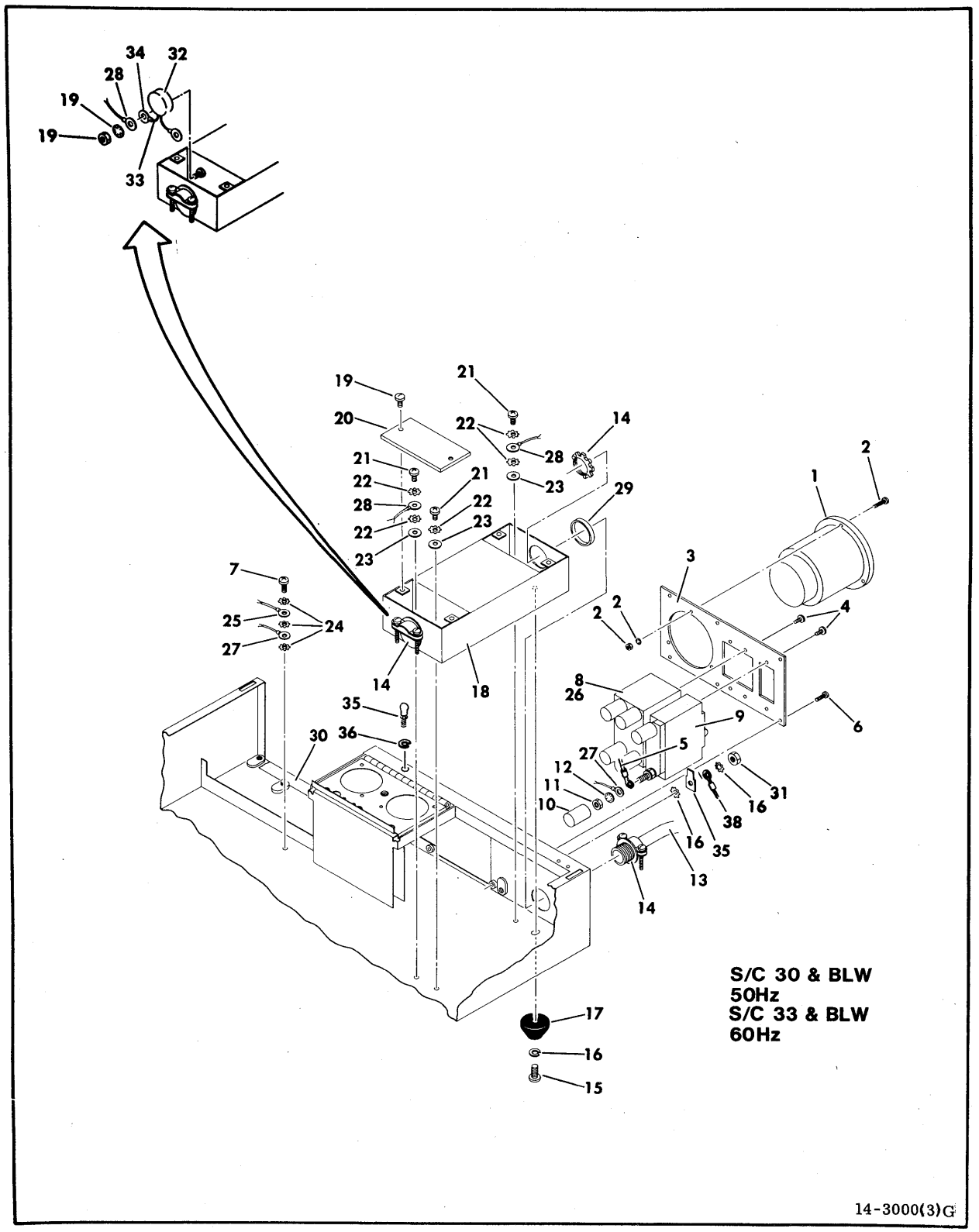

Figure 3-32. Base Assembly (Sheet 3)

INDEX NO	PART NO	PART DESCRIPTION	NOTE
3-32		BASE ASSEMBLY (Sheet 3)	
1	##	ELAPSED TIME METER (A1M1)	
2		HARDWARE, Attaching	Supplied With Elapsed Time Meter
3	75256100	PLATE, Component Mounting	
4	93749158	SCREW, 6-32 x 1/4 Washer Pan Head	
5	93541012	TERMINAL, Ring Tongue (Part of W12)	
6	93749086	SCREW, 4-40 x 3/8 Washer Pan Head	
7	10127113	SCREW, 6-32 x 3/8 Pan Head Machine	
8	##	CIRCUIT BREAKER (AC Power Circuit Breaker) (A1CB1)	
9	##	CIRCUIT BREAKER (Power Supply Circuit Breaker) (A1CB2)	
10	76416500	INSULATOR, Terminal	
11		NUT, Hex	Supplied With circuit Breakers
12	10126105	WASHER, #10 Internal Tooth Lock	
13	75259400	POWER CABLE ASSEMBLY	60 Hz
13	75259401	POWER CABLE ASSEMBLY	50 Hz
14	92801010	CLAMP, Cable	
15	10127141	SCREW, 10-32 x 5/16 Pan Head Machine	
16	10126403	WASHER, #10 External Tooth Lock	
17	95672701	BUMPER, Molded Recess	
18	##	FILTER, Line (A1FL1)	
19		HARDWARE, Attaching	Supplied With Line Filter
20		COVER, Line Filter	
21	10127121	SCREW, 8-32 x 5/16 Pan Head Machine	
22	10126402	WASHER, #8 External Tooth Lock	
23	10125606	WASHER, #8 Flat	
24	10126401	WASHER, #6 External Tooth Lock	
25	94369552	CABLE, Ground	
26	93541028	TERMINAL, Ring Tongue (Part of W1)	
27	93541018	TERMINAL, Ring Tongue (Part of W1)	

INDEX NO	PART NO	PART DESCRIPTION	NOTE
3-32		BASE ASSEMBLY (Sheet 3) (Contd)	
28	93541021	TERMINAL, Ring Tongue (Part of W1)	
29	75073100	SPACER, Flat	
30	95660411	TAPE, Nylon	
31	10125108	NUT, 10-32 Hex	
32	##	VARISTOR	50 Hz, 220/240
33	92261118	SLEEVING	50 Hz, 220/240
34	93541012	TERMINAL, Ring Tongue	50 Hz, 220/240
35	40125601	TERMINAL, Quick Connect	
36	93326004	STUD, Ball	
37	10125803	WASHER, #6 Spring Lock	
38	94369569	CABLE, Ground	Used on BK5A7L only; Other end attached to frame ground
	95604057	TERMINAL, Ring Tongue	

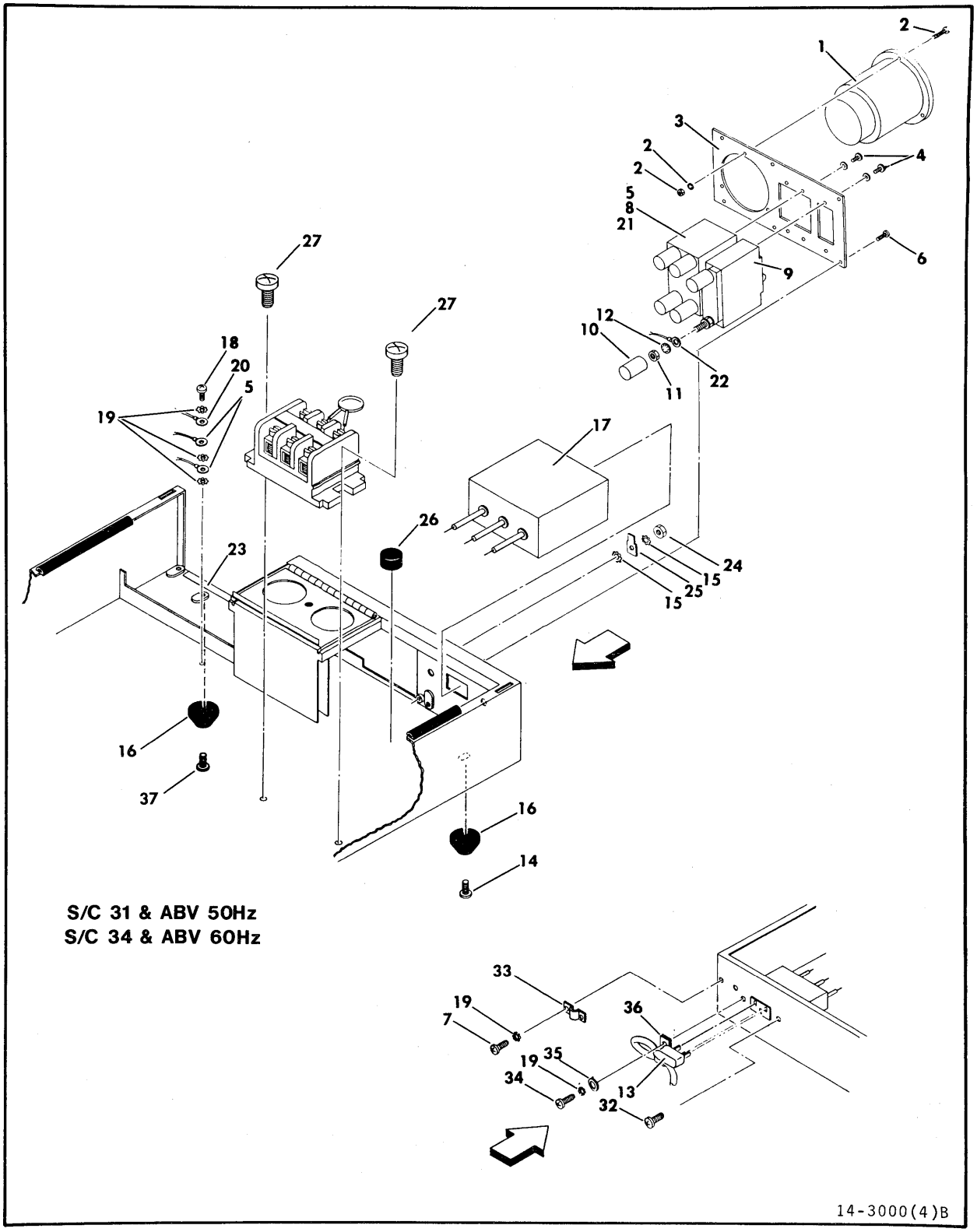

Figure 3-32. Base Assembly (Sheet 4)

INDEX NO	PART NO	PART DESCRIPTION	NOTE
3-32		BASE ASSEMBLY (Sheet 4)	
1	##	ELAPSED TIME METER (A1M1)	
2		HARDWARE, Attaching	Supplied with Elapsed Time Meter
3	75256100	PLATE, Component Mounting	
4	93749158	SCREW, 6-32 x 1/4 Pan Head Machine	
5	93541012	TERMINAL, Ring Tongue (Part of W1 & W2)	
6	93749086	SCREW, 4-40 x 3/8 Phillips Pan Head Machine	
7	10127113	SCREW, 6-32 x 3/8 Pan Head Machine	
8	##	CIRCUIT BREAKER (AC Power Circuit Breaker) (A1CB1)	
9	##	CIRCUIT BREAKER (Power Supply Circuit Breaker) (A1CB2)	
10	76416500	INSULATOR, Terminal	
11		NUT, Hex	Supplied with Circuit Breakers
12	10126105	WASHER, #10 Internal Tooth Lock	
13	75168300	POWER CORD	50 Hz
13	75168302	POWER CORD	60 Hz; used on all units except BK5C1J
13	75168312	POWER CORD	Used ON BK5C1J only
14	10127143	SCREW, 10-32 x 5/16 Pan Head Machine	
15	10126403	WASHER, #10 External Tooth Lock	
16	95672701	BUMPER, Molded Recess	
17	##	FILTER, Line (A1FL1)	
18	10127112	SCREW, 6-32 x 5/16 Pan Head Machine	
19	10126401	WASHER, #6 External Tooth Lock	
20	94369552	CABLE, Ground	
21	93541028	TERMINAL, Ring Tongue (Part of W1)	
22	93541018	TERMINAL, Ring Tongue (Part of W1)	
23	95660411	TAPE, Nylon	
24	10125108	NUT, Hex	
25	94274140	TERMINAL, Quick Connect	
26	75070702	BUMPER, Stop	Glued to base pan. See table 2-1 for adhesive.

INDEX NO	PART NO	PART DESCRIPTION	NOTE
3-32		BASE ASSEMBLY (Sheet 4) (Contd)	
27	10127121	SCREW, 8-32 x 5/16 Pan Head Machine	
28	##	VARISTOR	
29	92261118	SLEEVING	
30	24501602	BLOCK, Terminal	
31	24501658	BLOCK, Terminal Caps	
32	93749162	SCREW, 8-32 x 3/8 Pan Head	
33	45584801	CLAMP, Cable	
34	10127114	SCREW, 6-32 x 1/2 Pan Head Machine	
35	10125605	WASHER, #6 Flat	
36	92602005	CLAMP, Nylon	
37	10127142	SCREW, 10-32 x 3/8 Pan Head	
	94391546	LABEL, Warning Information (Not Shown)	

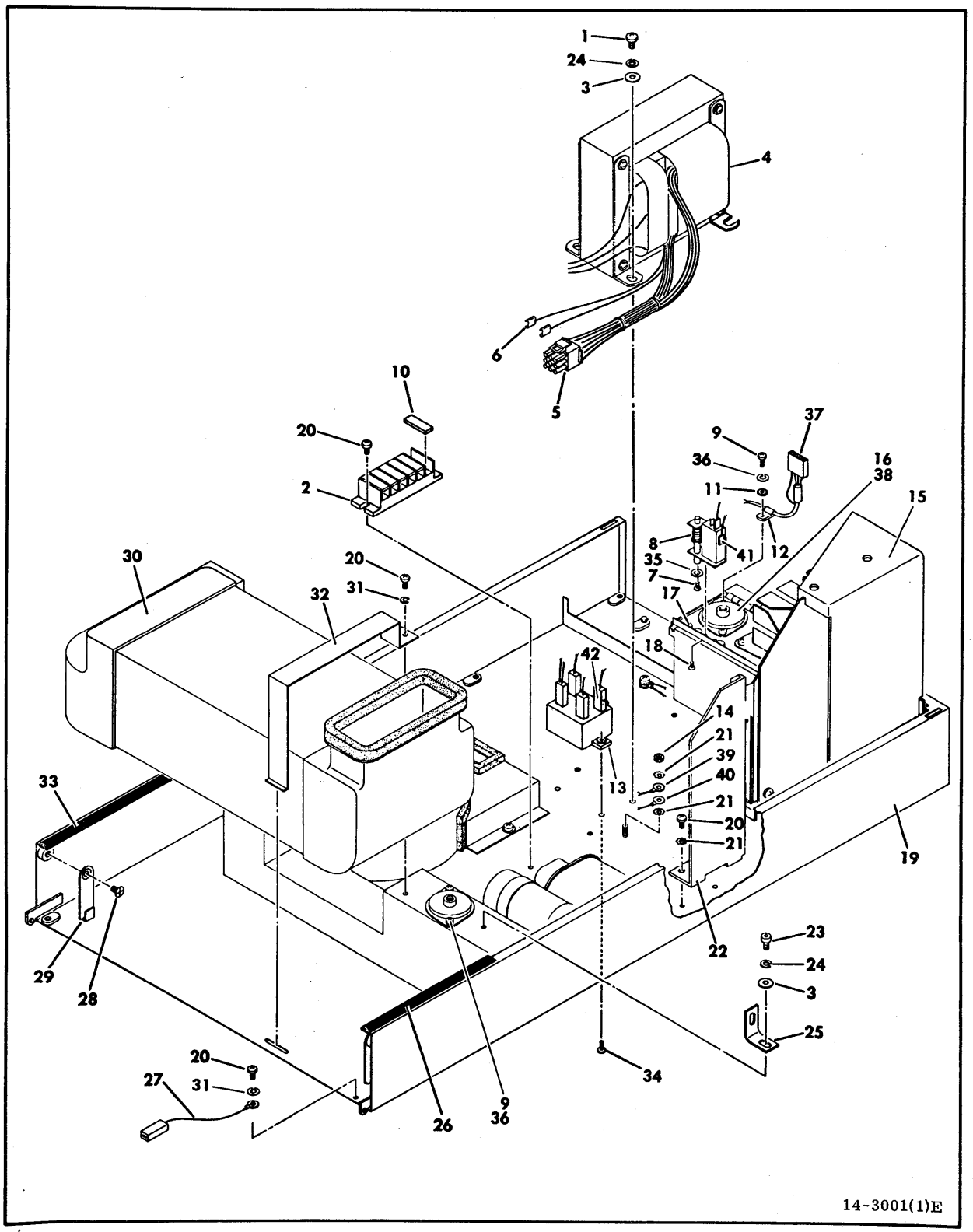

Figure 3-33. Base Assembly 832619XX (Sheet 1 of 4)

INDEX NO	PART NO	PART DESCRIPTION	NOTE
3-33	832619XX	BASE ASSEMBLY (A1) (Sheet 1 of 4)	Used on BK4B7B, BK5A1K, BK5A7M, BK5A9U & BK5C1F only
1	10127141	SCREW, 10-32 x 5/16 Pan Head Machine	
2	24501605	BLOCK, Terminal (A1TB1)	
3	10125607	WASHER, #10 Flat	
4	##	TRANSFORMER, Ferro (AC Power) (A1T1)	
5	94091007	CONNECTOR, (P100) (ASSOCIATED PARTS)	
	93943003	CONTACT, Socket	
		- - - * - - -	
6	95643212	TERMINAL, Quick Connect	
7	10127320	SCREW, 4-40 x 1/4 Pan Head Machine	
8	##	SWITCH, Deck Interlock (A1S4)	
9	10127113	SCREW, 6-32 x 3/8 Washer Pan Head	
10	24501658	COVER, Terminal Block	
11	10125605	WASHER, #6 Flat	
12	92602001	CLAMP, Nylon Cable	
13	##	SWITCH, Modified (Run Triac) (A1K1)	
14	10125106	NUT, 8-32 Machine Screw	
15		POWER SUPPLY ASSEMBLY	
16	94362600	MOUNT, Shock	
17	92633023	BUMPER, Grommet Type	
18	10125711	SCREW, 6-32 x 3/16 Flat Head Machine	
19	47331900	BASE	S/C 30 & Blw
19	73057300	BASE	S/C 31 & Abv
20	10127121	SCREW, 8-32 x 5/16 Pan Head Machine	
21	10126402	WASHER, #8 External Tooth Lock	
22	47171700	GUIDE, Deck	
23	10126243	SCREW, 10-32 x 3/8 Socket Hex Head	
24	10125805	WASHER, #10 Spring Lock	
25	75244900	BRACKET, Shock Lock	
26	76423801	GASKET, Base Side	
27	94369536	CABLE, Ground	
28	92826236	SCREW, 10-32 x 5/16 Self-Locking Pan Head	
29	76427600	ARM, Case Support	

INDEX NO	PART NO	PART DESCRIPTION	NOTE
3-33	832619XX	BASE ASSEMBLY (A1) (Sheet 1) (Contd)	
30	##	FILTER, Air	
31	10125804	WASHER, #8 Spring Lock	
32	77475800	CLAMP, Air Filter	
33	76423800	GASKET, Base Side	
34	10125939	SCREW, 6-32 x 5/16 Flat Head Machine	
35	10125801	WASHER, #4 Spring Lock	
36	10125803	WASHER, #6 Spring Lock	
		(ITEMS LISTED BELOW THIS NOTE ARE NOT PART OF THE BASE ASSEMBLY)	
37		CONNECTOR, Socket Housing (See Deck Assembly Sheet 4 for Part Number)	
38	76419000	GASKET, Shock Mount	Used as Spacer under Shock Mounts
39		CABLE, Ground (Drive Motor Ground Cable See Drive Motor and Brake Assembly for Part Number)	
40	95604057	CONNECTOR, Ring Tongue (Part of W3)	
41	94281327	RECEPTACLE, Slide On (A1S4) (Part of W3)	
42	94309802	POD, Terminal (A1K1) (Part of W1) (Part of W3)	
		(ASSOCIATED PARTS)	
	93747029	RECEPTACLE, Slide On	

- - - * - - -

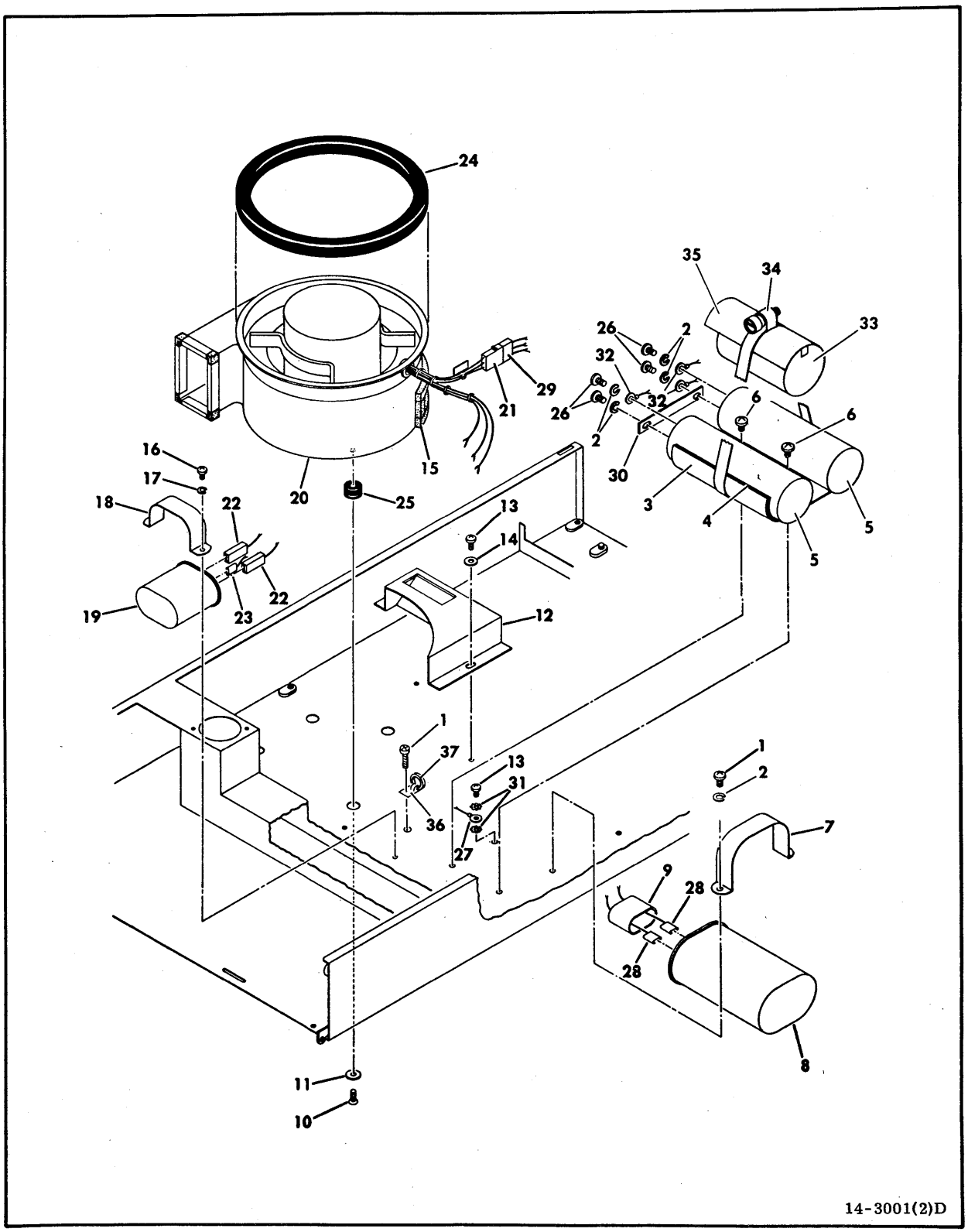

Figure 3-33. Base Assembly (Sheet 2)

INDEX NO	PART NO	PART DESCRIPTION	NOTE
3-33		BASE ASSEMBLY (Sheet 2)	
1	10127141	SCREW, 10-32 x 5/16 Pan Head Machine	
2	10125805	WASHER, #10 Spring Lock	
3	82330800	BRACKET, Capacitor	
4	95027403	TAPE, Double Adhesive Foam	
5	##	CAPACITOR, 50V 21000µf Electrolytic (Servo Capacitor (A1C1, A1C2)	
6	93755236	SCREW, 10-32 x 5/16 Pan Head Machine	
7	95643601	CLAMP, Capacitor	
8	##	CAPACITOR, 660 VAC 6µf (Transformer Tuning Capacitor) (A1C8)	
9	95582501	BOOT, Double Entrance	
10	10125725	SCREW, 8-32 x 1/2 Flat Head	
11	76422601	WASHER, Special	
12	47173700	PLENUM, Logic Chassis Air	
13	10127120	SCREW, 8-32 x 1/4 Pan Head Machine	
14	10125606	WASHER, #8 Flat	
15	47201501	GASKET, Air Plenum	
16	10127121	SCREW, 8-32 x 5/16 Pan Head Machine	
17	10125804	WASHER, #8 Spring Lock	
18	92826001	BRACKET, Wraparound Capacitor	
19	##	CAPACITOR, 370 VAC 4µf (Blower Motor Start Capacitor) (A1C5)	
20	##	BLOWER ASSEMBLY (A1BM1)	
21	51905901	CONNECTOR, Pin Housing (J301)	
		(ASSOCIATED PARTS)	
	51905802	CONTACT, Pin (.080-.100 DIA)	
	51905815	CONTACT, Pin (.100-.130 DIA)	
		- - - * - - -	
22	94309802	POD, Terminal	
		(ASSOCIATED PARTS)	
	93747022	TERMINAL, Quick Connect (.080-.100 DIA)	
	93747025	TERMINAL, Quick Connect (.100-.130 DIA)	
		- - - * - - -	

INDEX NO	PART NO	PART DESCRIPTION	NOTE
3-33		BASE ASSEMBLY (Sheet 2) (Contd)	
23	93747022	TERMINAL, Quick Connect	
24	76424400	GASKET, Blower	
25	94364000	GROMMET, Square Shoulder	
26	93755238	SCREW, 10-32 x 3/8 Pan Head Machine	
27	93541018	TERMINAL, Ring Tongue (Chassis Ground) (Part of W1)	
28		TERMINAL, Quick Connect (See Base Assembly Sheet 1 For Part Number)	
29	51906001	CONNECTOR (P301) (Part of W1)	
		(ASSOCIATED PARTS)	
	51906202	CONTACT, Socket	
		- - - * - - -	
30	75244802	BAR, Buss	
31	10126402	WASHER, #8 External Tooth Lock	
32	95604039	CONNECTOR, Ring Tongue (C1 & C2) (Part of W3)	
33	##	CAPACITOR, 65 VCD 16000 µf (Retract) (A1C7)	
34	94275215	CLAMP, Hose	
35	82338200	BRACKET, Capacitor Protection	
36	94277503	BASE, Mounting	
37	94277400	STRAP, Cable Tie	

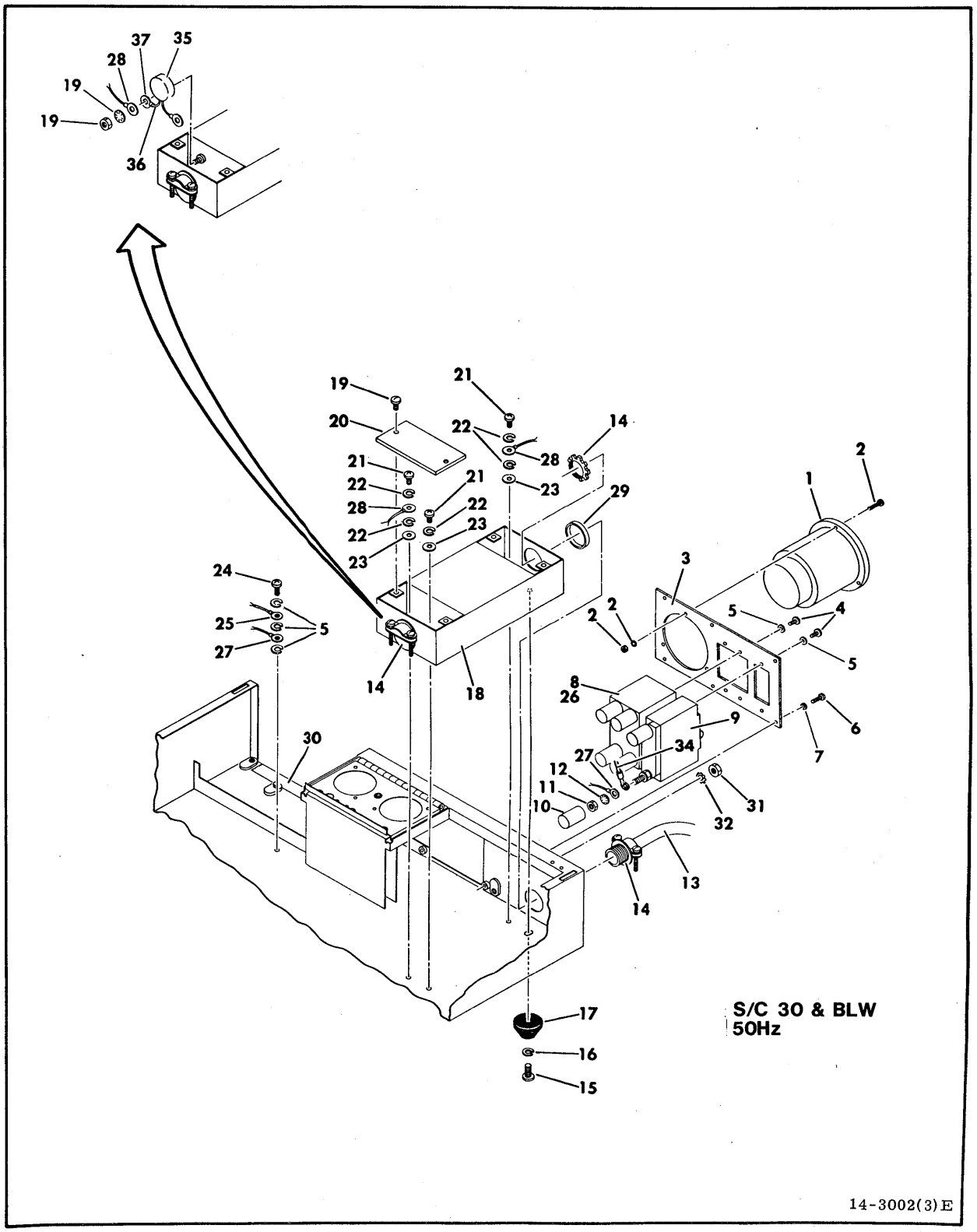

Figure 3-33. Base Assembly (Sheet 3)

INDEX NO	PART NO	PART DESCRIPTION	NOTE
3-33		BASE ASSEMBLY (Sheet 3)	
1	##	ELAPSED TIME METER (A1M1)	
2		HARDWARE, Attaching	Supplied with Elapsed Time Meter
3	75256100	PLATE, Component Mounting	
4	93749158	SCREW, 6-32 x 1/4 Pan Head Machine	
5	10125803	WASHER, #6 Spring Lock	
6	10127104	SCREW, 4-40 x 3/8 Pan Head Machine	
7	10125801	WASHER, #4 Spring Lock	
8	##	CIRCUIT BREAKER (AC Power Circuit Breaker) (A1CB1)	
9	##	CIRCUIT BREAKER (Power Supply Circuit Breaker) (A1CB2)	
10	76416500	INSULATOR, Terminal	
11		NUT, Hex	Supplied with Circuit Breakers
12	10126105	WASHER, #10 Internal Tooth Lock	
13	83269311	POWER CABLE ASSEMBLY	
14	92801010	CLAMP, Cable	
15	10127142	SCREW, 10-32 x 3/8 Pan Head Machine	
16	10125805	WASHER, #10 Spring Lock	
17	95672701	BUMPER, Molded Recess	
18	##	FILTER, Line (A1FL1)	
19		HARDWARE, Attaching	Supplied with Line Filter
20		COVER, Line Filter	
21	10127120	SCREW, 10-32 x 5/16 Pan Head Machine	
22	10125804	WASHER, #10 Spring Lock	
23	10125606	WASHER, #10 Flat	
24	10127112	SCREW, 6-32 x 5/16 Pan Head Machine	
25	94369552	CABLE, Ground	
26	93541028	TERMINAL, Ring Tongue (Part of W1)	
27	93541018	TERMINAL, Ring Tongue (Part of W1)	
28	93541021	TERMINAL, Ring Tongue (Part of W1)	
29	75073100	SPACER, Flat	
30	95660411	TAPE, Nylon	
31	10125108	NUT, 10-32 Hex	

INDEX NO	PART NO	PART DESCRIPTION	NOTE
3-33		BASE ASSEMBLY (Sheet 3) (Contd)	
32	10126403	WASHER, #10 External Tooth Lock	
33	10126401	WASHER, #6 External Tooth Lock	
34	93541012	TERMINAL, Ring Tongue (Part of W12)	
35	##	VARISTOR	50 Hz, 220/240 only
36	92261118	SLEEVING	50 Hz, 220/240 only
37	93541046	TERMINAL, Ring Tongue	50 Hz, 220/240 only

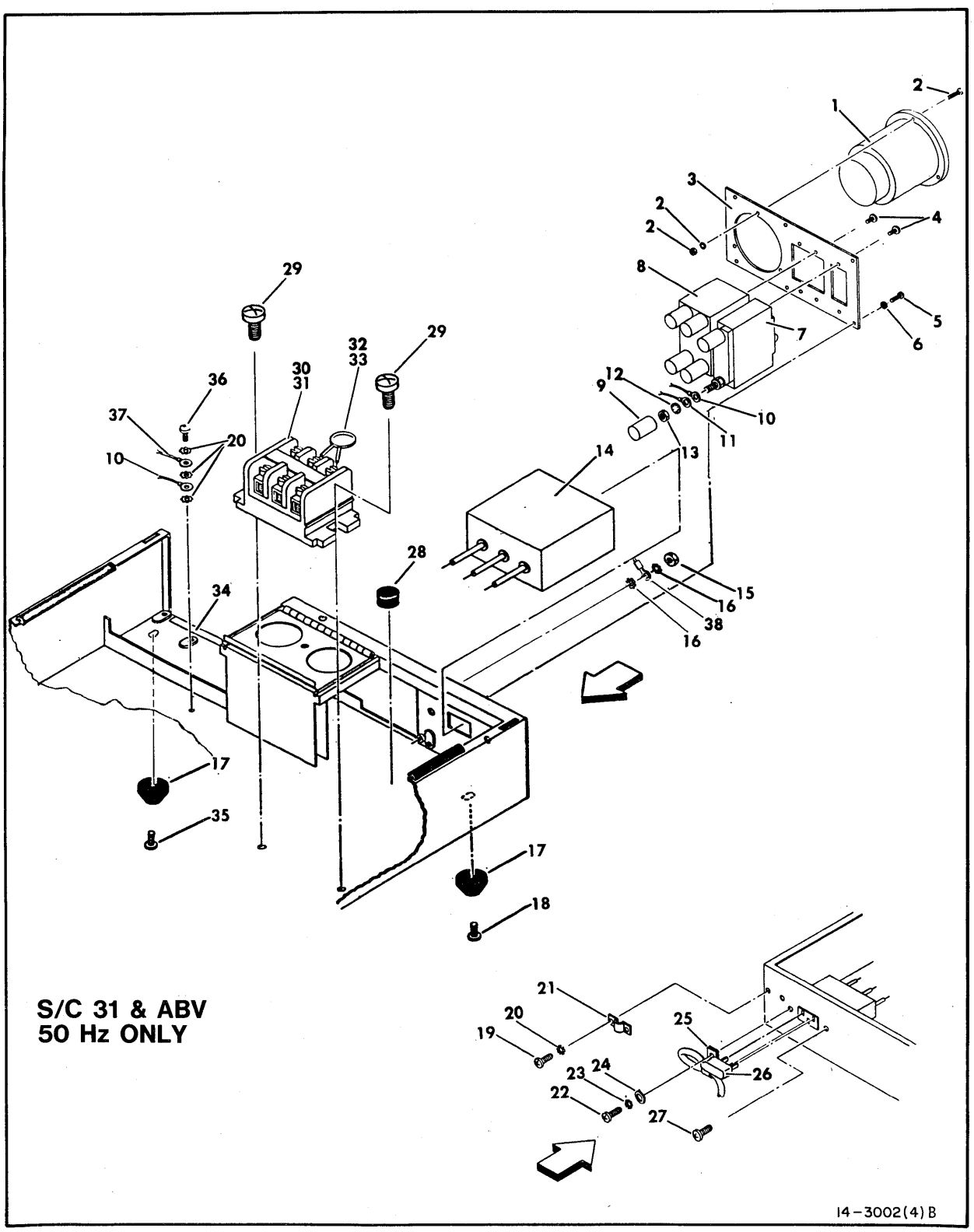

Figure 3-33. Base Assembly (Sheet 4)

INDEX NO	PART NO	PART DESCRIPTION	NOTE
3-33		BASE ASSEMBLY (Sheet 4)	
1	##	ELAPSED TIME METER (A1M1)	
2		HARDWARE, Attaching	Supplied with Elapsed Time Meter
3	75256100	PLATE, Component Mounting	
4	93749158	SCREW, 6-32 x 1/4 Pan Head Machine	
5	10127104	SCREW, 4-40 x 3/8 Pan Head Machine	
6	10125801	WASHER, #4 Spring Lock	
7	##	CIRCUIT BREAKER (Power Supply Circuit Breaker) (A1CB2)	
8	##	CIRCUIT BREAKER (AC Circuit Breaker) (A1CB1)	
9	76416500	INSULATOR, Terminal	
10	93541012	TERMINAL, Ring Tongue (Part of W1 & W12)	
11	93541018	TERMINAL, Ring Tongue (Part of W1)	
12	10126105	WASHER,	
13		NUT, Hex	Supplied with Circuit Breakers
14	##	FILTER, Line (A1FL1)	
15	10125108	NUT, 10-32 Hex Machine	
16	10126403	WASHER, #10 External Tooth Lock	
17	95672701	BUMPER,	
18	10127143	SCREW, 10-32 x 1/2 Pan Head	
19	10127113	SCREW, 6-32 x 3/8 Pan Head	
20	10125803	WASHER, #6 Spring Lock	
21	45584801	CLAMP, Cable	
22	10127114	SCREW, 6-32 x 1/2 Pan Head	
23	10126401	WASHER, #6 External Tooth Lock	
24	10125605	WASHER, #6 Flat	
25	92602005	CLAMP, Nylon Cable	
26	75168300	POWER CABLE	
27	93749162	SCREW, 8-32 x 3/8 Washer External Tooth	
28	75070702	BUMPER, Stop	
29	10127121	SCREW, 8-32 x 5/16 Pan Head	
30	24501602	BLOCK, Terminal	

INDEX NO	PART NO	PART DESCRIPTION	NOTE
3-33		BASE ASSEMBLY (Sheet 4) (Contd)	
31	24501658	CAPS, Terminal Block	
32	##	VARISTOR	
33	92261118	SLEEVING	
34	95660411	TAPE, Nylon	
35	10127142	SCREW, 10-32 x 3/8 Pan Head	
36	10127112	SCREW, 6-32 x 5/16 Pan Head	
37	94369515	CABLE, Ground	
38	94281430	CABLE, Ground	Used on BK5A7M only; Other end attached to frame ground

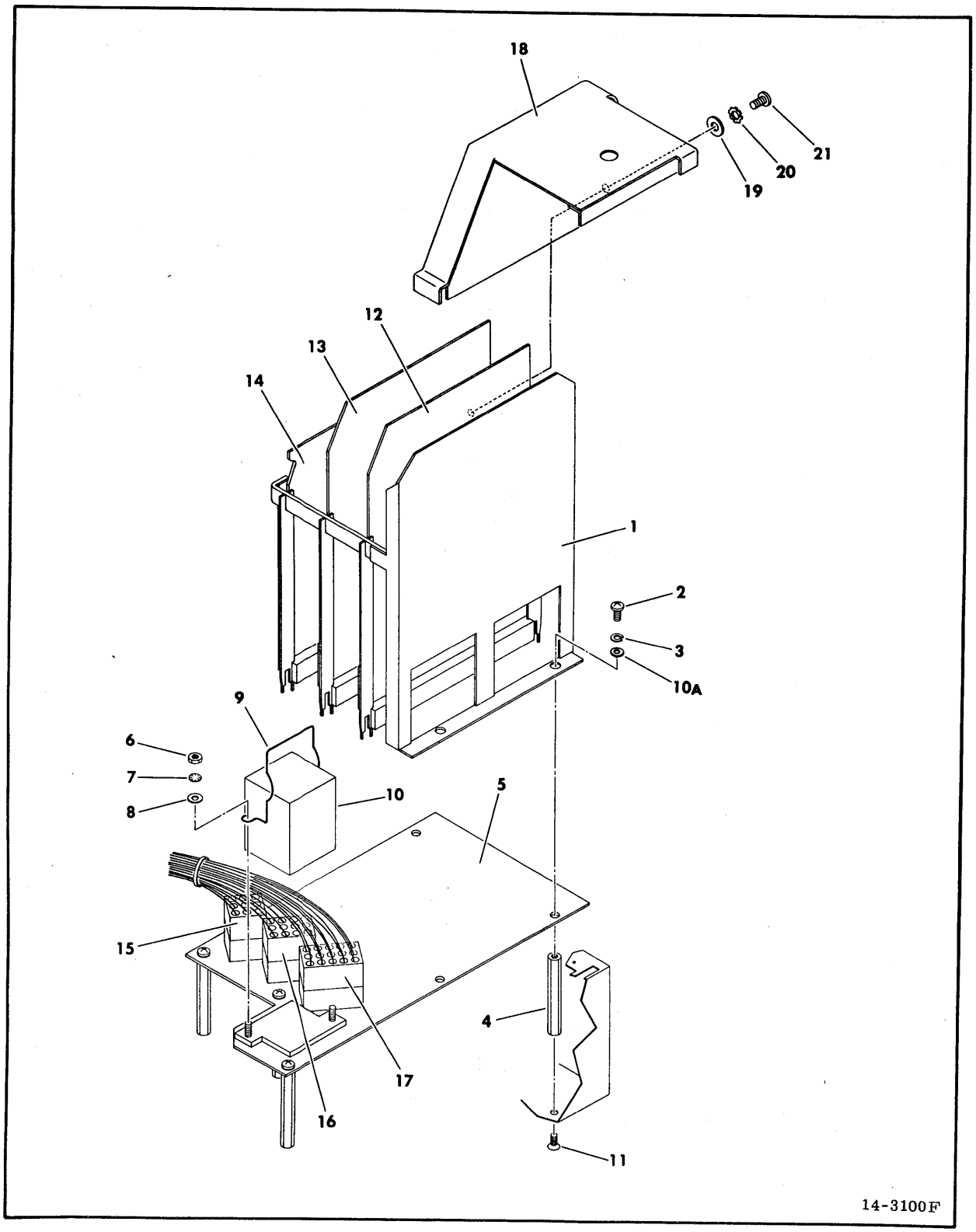

Figure 3-34. 3 Card Power Supply Assembly

INDEX NO	PART NO	PART DESCRIPTION	NOTE
3-34	47174000	3 CARD POWER SUPPLY ASSEMBLY	
1	47170800	CHASSIS, Power Supply	
2	10127112	SCREW, 6-32 x 5/16 Phillips Pan Head Machine	
3	10125803	WASHER, #6 Spring Lock	
4	93114322	STANDOFF, 6-32 x 2 Tapped Hex	
5	77568300	MOTHERBOARD (Component Assembly Type _VQN)	
6	95510024	NUT, Hex	
7	10126101	WASHER, #4 Internal Tooth Lock	
8	10125603	WASHER, #4 Flat	
9	94378503	RELAY, Clip Plug	
10	94378509	RELAY, 11 Pin Plug 3 Pole (Emergency Retract) (A1K2)	
10A	10125605	Washer, #6 Flat	
		(ITEMS LISTED BELOW THIS NOTE ARE NOT PART OF THE POWER SUPPLY ASSEMBLY)	
11	10125909	SCREW, 6-32 x 5/16 Flat Head	
12		COMPONENT ASSEMBLY, Type _SJV (±42V Power Supply and Emergency Retract) (A1A01) (See Figure 3-35)	
13		COMPONENT ASSEMBLY, Type _SKV (±20V, ±12V Power Supply) (A1A02) (See Figure 3-36)	
14		COMPONENT ASSEMBLY, Type _SHV (±5V Power Supply) (A1A03) (See Figure 3-37)	
15		CONNECTOR (P100) (See Base Assembly Sheet 1 For Part Number)	
16	51906005	CONNECTOR (P1A) (Part of W3) (ASSOCIATED PARTS)	
	51906200	CONTACT, Socket	
		- - - * - - -	
17	51906006	CONNECTOR (P1B) (Part of W3) (ASSOCIATED PARTS)	
	51906200	CONTACT, Socket	
		- - - * - - -	
18	47174800	COVER, Power Supply	
19	10125606	WASHER, #8 Flat	
20	10126402	WASHER, #8 External Tooth Lock	
21	10127122	SCREW, 8-32 x 1/32 Pan Head Machine	
22	83274400	LABEL, Chassis Map	

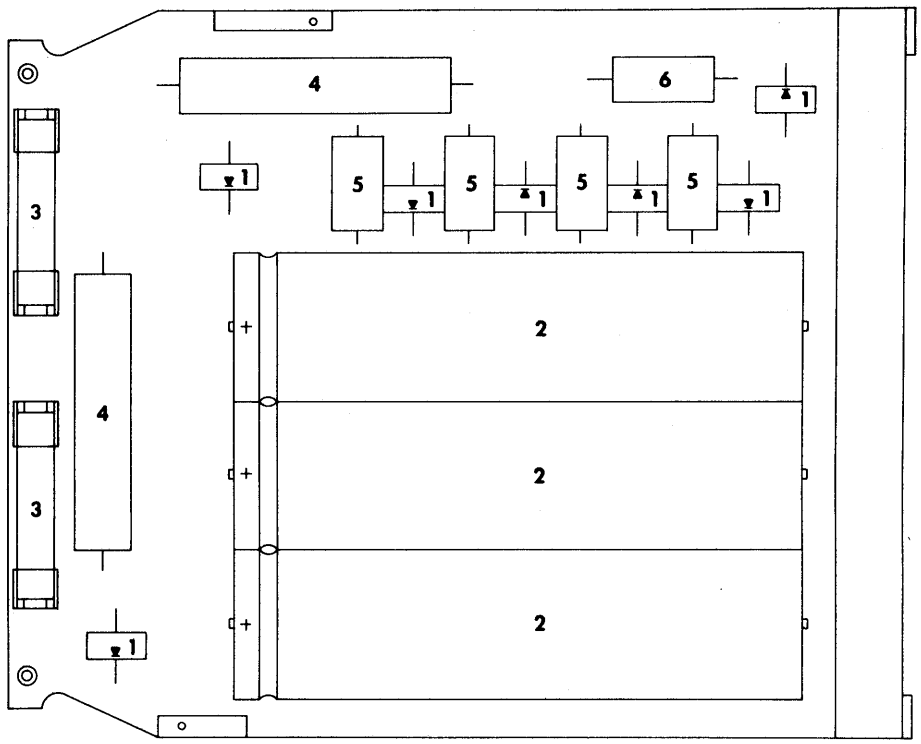

14-3200A

Figure 3-35. Component Assembly, Type _SJV
Used on 3 Card Power Supply Only

INDEX NO	PART NO	PART DESCRIPTION	NOTE
3-35	##	COMPONENT ASSEMBLY, Type _SJV (±42V Power Supply and Emergency Retract) (A1A01)	Used on 3 card power supply only
1	95575000	RECTIFIER, Hi-Current Silicon	
2	94383701	CAPACITOR, 5,500 UF 50 V ±100% -10% Electrolytic	
3	##	FUSE, 6 Amp Quick-Acting	
4	95597919	RESISTOR, 510 Ω ±10% 15W Fixed	
5	92496185	CAPACITOR, 82,000 PF 200 V ±10% Nonelectrolytic	
6	95212446	RESISTOR, 2 W 1,000 Ω ±10%	

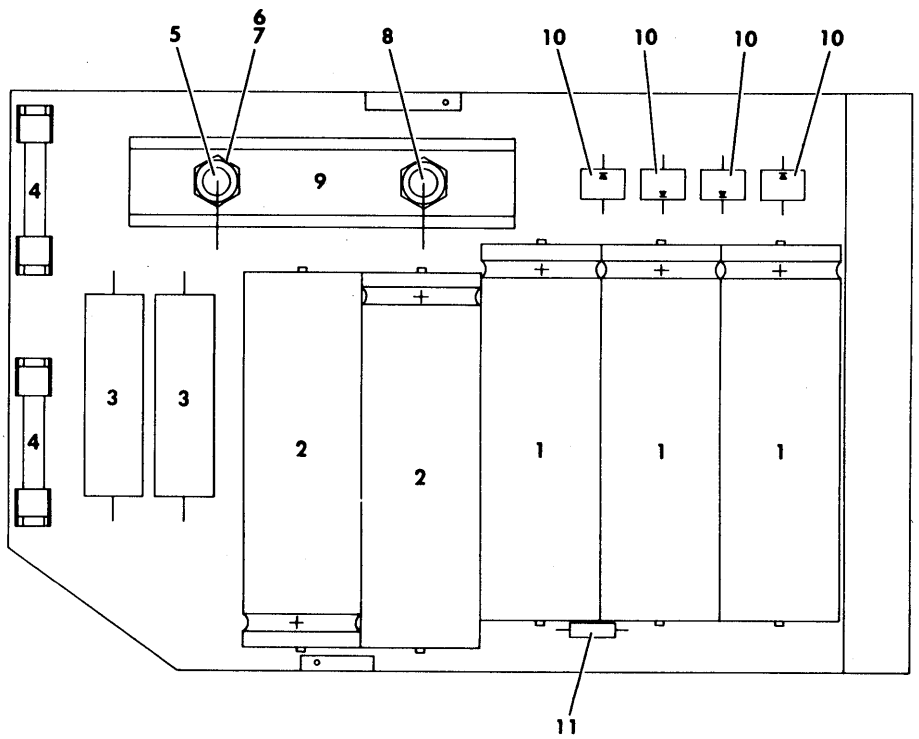

14-3300A

Figure 3-36. Component Assembly, Type _SKV
Used on 3 Card Power Supply Only

INDEX NO	PART NO	PART DESCRIPTION	NOTE
3-36	##	COMPONENT ASSEMBLY, Type _SKV (±20 V, ±12 V Power Supplies) (A1A02)	Used on 3 card power supply only
1	94383702	CAPACITOR, 14,000 UF 15 V ±100% -10% Electrolytic	
2	94383700	CAPACITOR, 7,500 UF 35 V ±100% -10% Electrolytic	
3	95594112	RESISTOR, 51 Ω ±10% 10 W Fixed	
4	##	FUSE, 2 Amp Quick-Acting	
5	50240415	DIODE, 12 V ±5% Silicon	
6	10125108	NUT, 10-32 Hex	
7	10125805	WASHER, #10 Spring Lock	
8	50240515	DIODE, 10 W 12 V ±5% Zener Silicon	
9	47478600	HEAT SINK	
10	95575000	RECTIFIER, Hi Current Silicon	
11	92512825	RESISTOR, 1,000 Ω ±5% 1/2 W	

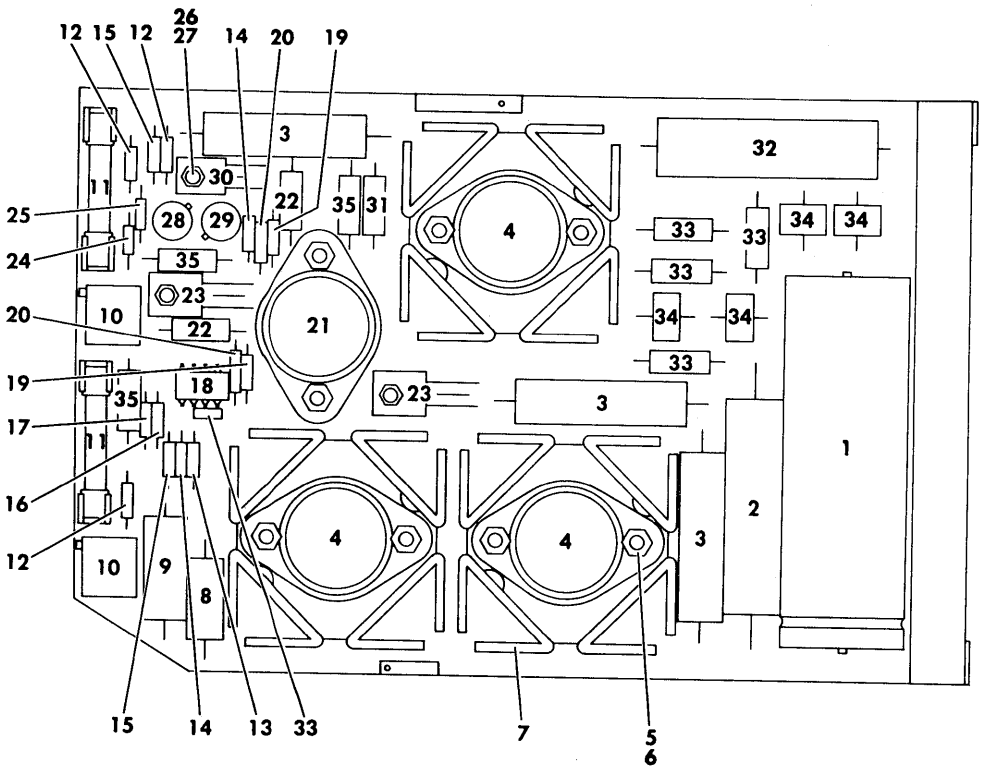

14-3400A

Figure 3-37. Component Assembly, Type _SHV
Used on 3 Card Power Supply Only

INDEX NO	PART NO	PART DESCRIPTION	NOTE
3-37	##	COMPONENT ASSEMBLY, Type SHV (±5 V Power Supply) (A1A03)	Used on 3 card power supply only
1	94383702	CAPACITOR, 14,000 UF 15 V ±100% -10% Electrolytic	
2	92427152	CAPACITOR, 1,500 UF 16 V ±100% -10% Electrolytic	
3	92825001	RESISTOR, 7 W, 0.1 Ω ±1% Wire Wound Fixed Power	
4	50221301	TRANSISTOR, Silicon Power (Q4, Q9, Q10)	
5	95510026	NUT, Hex	
6	10126103	WASHER, #6 Internal Tooth Lock	
7	94261001	HEAT SINK, Transistor	
8	92512913	RESISTOR, 33 Ω ±10% 2 W	
9	92427133	CAPACITOR, 100 UF 15 V +75% -10% Electrolytic	
10	92617031	POTENTIOMETER, 2.00 Ω Wire Wound	
11	##	FUSE, 6 Amp Quick-Acting	
12	92512256	RESISTOR, 1,800 Ω ±5% 1/4 W	
13	92512151	RESISTOR, 56 Ω ±5% 1/4 W	
14	92512248	RESISTOR, 68 Ω ±5% 1/4 W	
15	92512259	RESISTOR, 5,600 Ω ±5% 1/4 W	
16	92512157	RESISTOR, 470 Ω ±5% 1/4 W	
17	94356143	CAPACITOR, 560 PF 200 V Nonelectrolytic	
18	95596100	VOLTAGE REGULATOR, I-C	
19	92512160	RESISTOR, 2,200 Ω ±5% 1/4 W	
20	50240108	DIODE, 7 Ω ±5% 6.2 V Silicon	
21	50221401	TRANSISTOR, Power PNP Silicon (Q6)	
22	92427139	CAPACITOR, 45 UF 30 V ±20% Electrolytic	
23	94262016	TRIAC, Bi-Directional	
24	94360322	RESISTOR, 1,690 Ω ±1%	
25	92512245	RESISTOR, 27 Ω ±5% 1/4 W	
26	92583002	NUT, Lock	

INDEX NO	PART NO	PART DESCRIPTION	NOTE
3-37	##	COMPONENT ASSEMBLY, Type _SHV (Contd)	
27	10126101	WASHER, #4 Internal Tooth Lock	
28	95592500	VOLTAGE, Negative I-C Regulator	
29	50210610	TRANSISTOR, 25 V SPNP	
30	50221001	TRANSISTOR, 60 V SPNP	
31	92427089	CAPACITOR, 22 UF 15 V ±10% Electrolytic	
32	95597946	RESISTOR, 15 W 0.62 Ω ±10% Fixed Wire Wound	
33	94354826	CAPACITOR, 0.1 UF ±20% Ceramic High K	
34	95575000	RECTIFIER, Hi Current Silicon	
35	92427087	CAPACITOR, 4.7 UF 50 V ±20% Electrolytic	

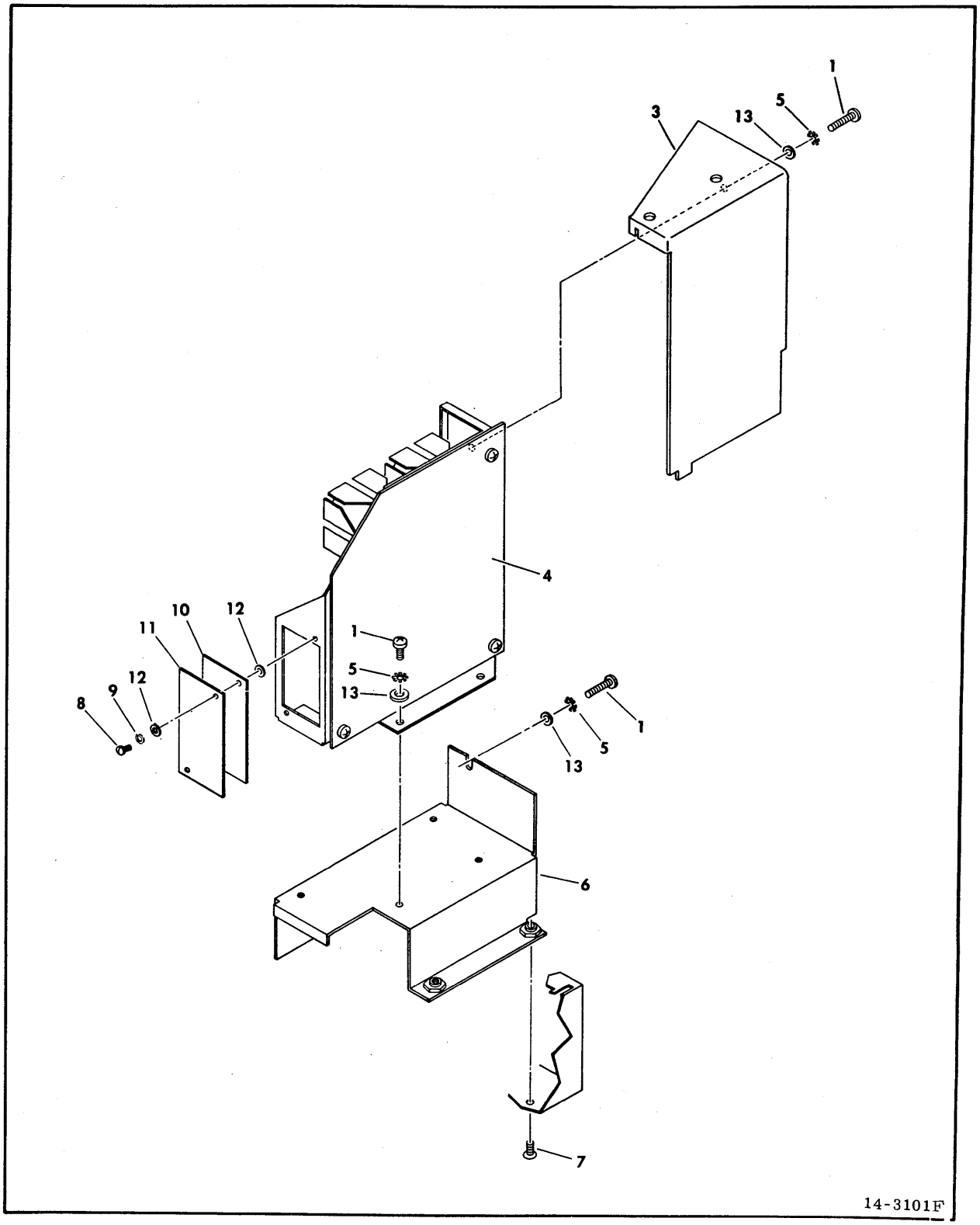

Figure 3-38. 2 Card Power Supply Assembly

INDEX NO	PART NO	PART DESCRIPTION	NOTE
3-38		2 CARD POWER SUPPLY ASSEMBLY NOTE: All parts listed below are field replaceable and must be ordered separately.	
1	10127122	SCREW, 8-32 x 3/4 Pan Head Machine	
2	10125804	WASHER, #8 Spring Lock	
3	82335200	COVER, Power Supply	
4	##	COMPONENT ASSEMBLY, Type _XKV (See Figure 3-39)	
5	10126402	WASHER, #8 External Tooth Lock	
6	47289700	BASE, Power Supply	
7	10125909	SCREW, 6-32 x 5/16 Flat Head Machine	
8	93749087	SCREW, 4-40 x 7/16 Pan Head Machine	
9	10125606	WASHER, #8 Flat	
10	##	COMPONENT ASSEMBLY, Type _XFV	
11	73028800	COVER, Protective	
12	10125603	WASHER, #4 Flat	
13	10125606	WASHER, #8 Flat	

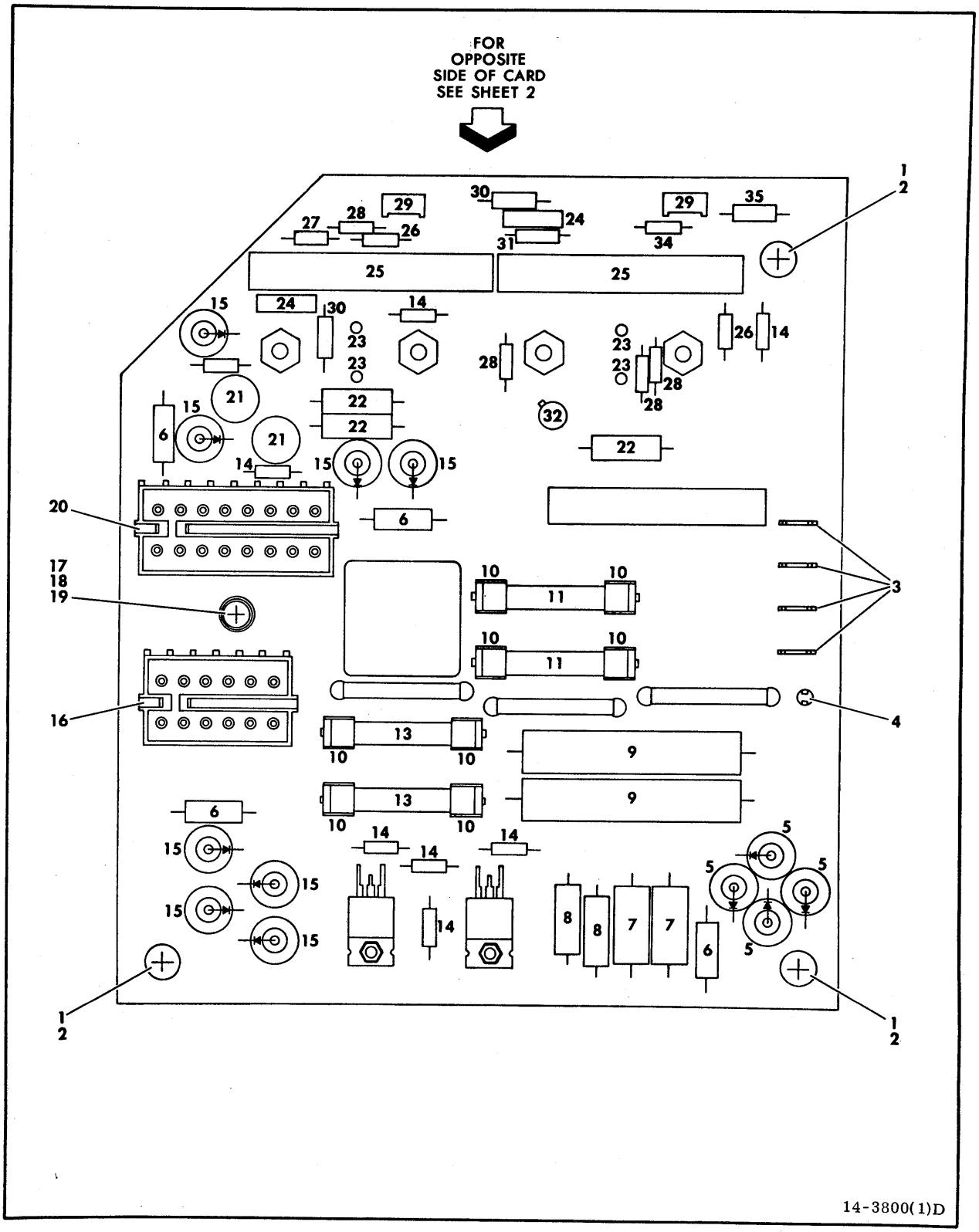

Figure 3-39. Component Assembly, Type XKV (Sheet 1 of 2)
Used on 2 Card Power Supply Only

INDEX NO	PART NO	PART DESCRIPTION	NOTE
3-39	##	COMPONENT ASSEMBLY, Type XKV (Power Supply) (Sheet 1 of 2)	Used on 2 card power supply only
1	95587700	NUT, Push-in Expansion	
2	95655530	SCREW, 8-18 x 1/2 Sheet Metal Pan Head	
3	95524700	TERMINAL, Quick Connect	
4	93549019	BUMPER, Nylon	
5	95575001	RECTIFIER, Hi Current Silicon	
6	92496127	CAPACITOR, 0.01 UF 200 V Non-electrolytic	
7	92512933	RESISTOR, 560 Ω 2 W	
8	92512859	RESISTOR, 47 Ω 1/2 W	
9	95594119	RESISTOR, 510 Ω 10 W Fixed	
10	95588400	CLIP, Fuse	
11	##	FUSE, 8 Amp Quick Acting	
12	24547533	PLATE, Warning	
13	##	FUSE, 5 Amp Quick Acting	
14	92427027	CAPACITOR 35 V ±20% Electrolytic	
15	95575000	RECTIFIER, Hi Current Silicon	
16	95882803	PIN HEADER ASSEMBLY	
17	95524401	WASHER, Lock	
18	94047078	WASHER, Special	
19	92751158	SCREW, 6-32 x 1/4 Pan Head Machine	
20	95882804	PIN HEADER ASSEMBLY	
21	94395528	CAPACITOR, 220 UF Electrolytic	
22	94389102	RESISTOR, Flameproof 2 W	
23	95593201	RECEPTACLE, PC BOARD	
24	94825900	RECTIFIER, Silicon	
25	15162000	REGULATOR, Voltage Hybrid	
26	92512242	RESISTOR, 15 Ω 1/4 W	
27	94360331	RESISTOR, 2100 Ω 1/4 W	
28	94360317	RESISTOR, 1500 Ω 1/4 W	
29	94391208	POTENTIOMETER	
30	92512807	RESISTOR, 120 Ω 1/2 W	
31	24553500	DIODE, Silicon	
32	50211411	TRANSISTOR, SPNP 40 V	
33	95653100	LABEL, High Voltage	
34	94360378	RESISTOR, 6490 Ω 1/4 W	
35	92496157	CAPACITOR, 4700 PH 200 V Non-Electrolytic	

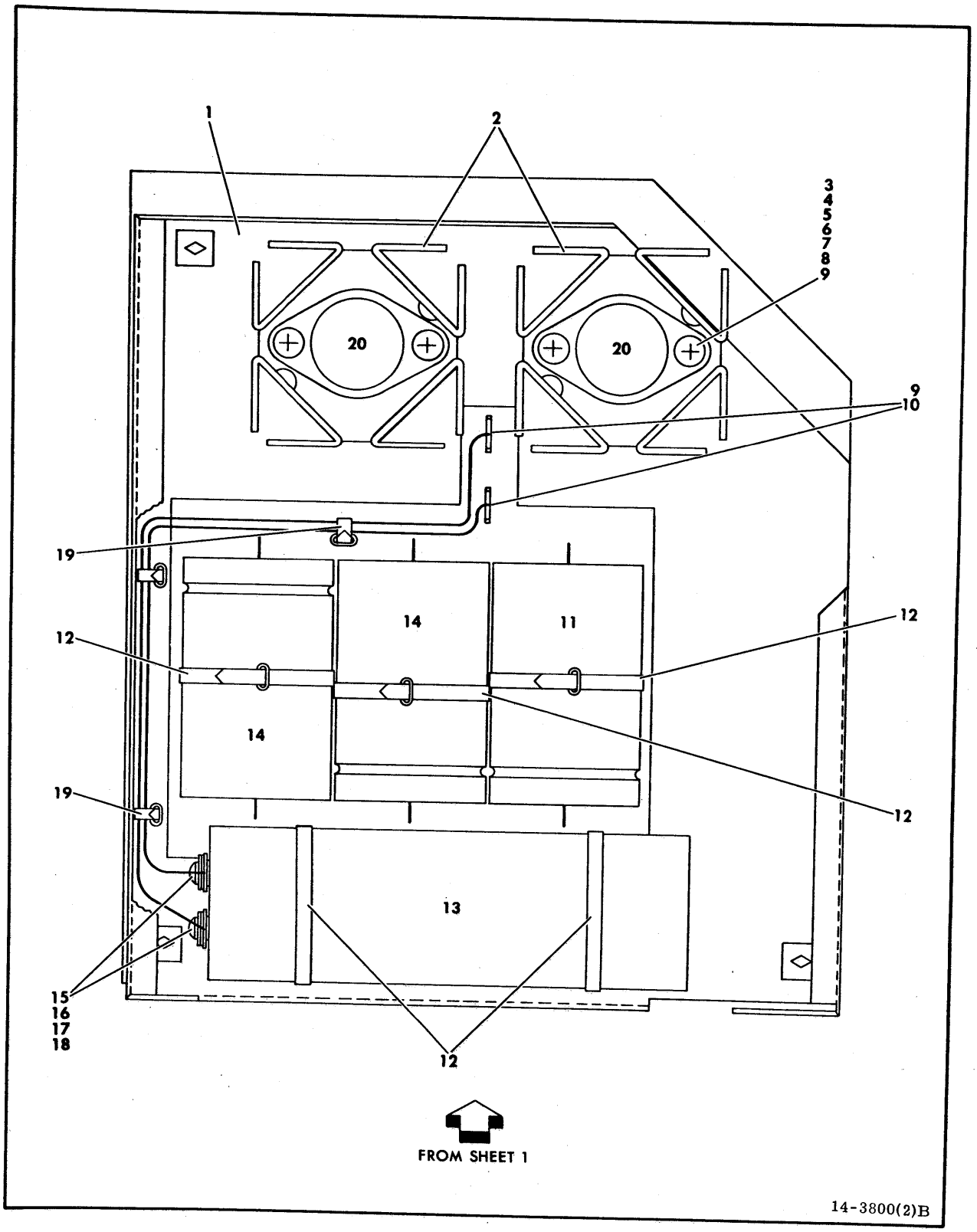

Figure 3-39. Component assembly, Type XKV (Sheet 2)
Used on 2 card Power Supply Only

INDEX NO	PART NO	PART DESCRIPTION	NOTE
3-39		COMPONENT ASSEMBLY, Type _XKV (Power Supply) (Sheet 2)	Used on 2 card power supply only
1	76871500	CHASSIS, Power Supply	
2	94261000	HEAT SINK, Transistor	
3	92751168	SCREW, 6-32 x 3/4 Phillips Head Machine	
4	95644205	BUSHING, Insulation	
5	94783900	WASHER, Mica	
6	95797301	WASHER, Phenolic	
7	95524401	WASHER, Lock	
8	94047078	WASHER, Special	
9	95524700	TERMINAL, Quick Connect	
10	95643216	CONNECTOR, Quick Connect	
11	94383709	CAPACITOR, Electrolytic (C5)	
12	94277422	STRAP, Cable Tie	
13	95661328	CAPACITOR, 27 000 UF 18 V (C2)	
14	94383710	CAPACITOR, Electrolytic (C12, C15)	
15	95604039	CONNECT, Ring Tongue	
16	93234236	SCREW, 10-32 x 5/16 Pan Head Machine	
17	95524408	WASHER, Lock	
18	94047081	WASHER, Special	
19	94277400	STRAP, Cable Tie	
20	50223800	TRANSISTOR, SNPN Darington (Q5, Q6)	

SECTION 3B

SPARE PARTS LIST

GENERAL

The Spare Parts List serves as an aid in determining the interchangeability of assemblies and parts to be spared. An example of the columns used in the Spare Parts List is shown on the next page.

NOTE

> The spare parts list establishes the support service level of the unit. Individual parts, assemblies, or components not on this list may be long lead time items subject to significant delays.

The Spare Parts List is divided into four columns:

Items Appear On - This column cross-references the part number in the spare parts list to the associated figure number, page number, and index number in the illustrated parts breakdown.

Description - This column gives the name and a brief description of the part or assembly. This column also tracks series code history information.

Part Number and Replacement Part Number- These columns provide an eight-digit number. The difference between the two columns is that the Part Number column gives all the possible part numbers used for a particular part or assembly, while the Replacement Part Number column gives the interchangeable spare part number.

Notes - This column provides additional information such as Field Change Order (FCO), Special Purchase Order (SPO), serial number, and machine configuration.

EXAMPLE OF SPARE PARTS LIST

ENGINEERING RECOMMENDED SPARE PARTS LIST						
ITEMS APPEAR ON			DESCRIPTION	PART NUMBER	REPLACE-MENT PART NUMBER	NOTES
Fig. No.	Page No.	Index No.				
3-11	3-37	25	CONTROL PANEL ASSEMBLY, A3A01 Used S/C 14 and above	WWWWW	XXXXX	

In the example above, the control panel assembly is referenced as index 25 on figure 3-11, which appears on page 3-37. The original part number was WWWWW; order part number XXXXX if it must be replaced.

ENGINEERING RECOMMENDED SPARE PARTS LIST						
ITEMS APPEAR ON Fig. No.	Page No.	Index No.	DESCRIPTION	PART NUMBER	REPLACE-MENT PART NUMBER	NOTES
			COMPONENT ASSEMBLIES			
			LOGIC			
3-22	3-81	10	_LSV Comp. Assy, Loc A2A01 CLSV - Used S/C 10 & above	54276503	54276503	
3-22	3-81	10	_FRV Comp. Assy, Loc A2a03 GFRV - Used S/C 10 & above	54226112	54226112	BK4XX
3-22	3-81	10	_KFV Comp. Assy, Loc A2A04 DKFV - Used s/C 10 & above	54262104	54262104	
3-22	3-81	10	_LRV Comp. Assy, Loc A2a05 HLRV - Used S/C 10 & above	54276108	54276108	Used on all units except BK4A5E/F, BK5A5V/W, BK5B6A-D
			KLRV - Used S/C 21 & above	54276111	54276111	Used on BK5B6A-D, BK4A5E/F, BK5A5V/W only
3-22	3-81	10	_LZV Comp. Assy, Loc A2A06 BLZV - Used S/C 10 & above	54279303	54279303	

ENGINEERING RECOMMENDED SPARE PARTS LIST

ITEMS APPEAR ON Fig. No.	Page No.	Index No.	DESCRIPTION	PART NUMBER	REPLACE-MENT PART NUMBER	NOTES
			COMPONENT ASSEMBLIES (Contd)			
			LOGIC (Contd)			
3-22	3-81	10	_LQV Com. Assy, Loc A2A07			
			BLQV - Used S/C 10 - 23	54275703	54275713	BK4XX
			LLQV - Used S/C 24 - 32	54275712	54275713	BK4XX
			MLQV - Used S/C 33 & above	54275713	54275713	BK4XX
			JLQV - Used S/C 10 & above	54275710	54275710	BK5XX
3-22	3-81	10	_LUV Comp. Assy, Loc A2A08			
			ELUV - Used S/C 10 & above	54277306	54277306	BK5XX
			FLUV - Used S/C 10 & above	54277307	54277307	BK4XX
3-22	3-81	10	_LPV Comp. Assy, Loc A2A09			
			FLPV - Used S/C 10 & above	54275307	54275307	
3-22	3-81	10	_SGV Comp. Assy, Loc A2A10			
			6SGV - Used S/C 10 & above	54152501	54152501	
3-22	3-81	10	_TVV Comp. Assy, Loc A2B01			
			FTVV - Used S/C 10 & above	54167707	54167707	CH I, used on 50/60 pin I/O only.
			GTVV - Used A/C 10 & above	54167708	54167708	CH I, used on S & IOBC only

ENGINEERING RECOMMENDED SPARE PARTS LIST

ITEMS APPEAR ON Fig. No.	Page No.	Index No.	DESCRIPTION	PART NUMBER	REPLACEMENT PART NUMBER	NOTES
			COMPONENT ASSEMBLIES (Contd)			
			LOGIC (Contd)			
3-22	3-81	10	_RVV Comp. Assy, Loc A2B02			
			JRVV - Used S/C 10 & above	54147711	54147711	
3-22	3-81	10	_TVV Comp. Assy, Loc A2B03			
			FTVV - Used S/C 10 & above	54167707	54167707	CH II, used on 50/60 pin I/O only.
			GTVV - Used S/C 10 & above	54167708	54167708	CH II, used on S & IOBC only.
3-22	3-81	10	_RVV Comp. Assy, Loc A2B04			
			JRVV - Used S/C 10 & above	54147711	54147711	Dual channel only
3-22	3-81	10	_KHV Comp. Assy, Loc A2B05			
			AKHV - Used S/C 10-14	54272902	54262906	Dual channel only
			BKHV - Used S/C 15-17	54262903	54262906	Dual channel only
			EKHV - Used S/C 17 & above	54262906	54262906	Dual channel only
3-22	3-81	10	_LWV Comp. Assy, Loc A2B06			
			FLWV - Used S/C 10 & above	54278107	54278107	

ENGINEERING RECOMMENDED SPARE PARTS LIST

ITEMS APPEAR ON Fig. No.	Page No.	Index No.	DESCRIPTION	PART NUMBER	REPLACE-MENT PART NUMBER	NOTES
			COMPONENT ASSEMBLIES (Contd)			
			LOGIC (Contd)			
3-22	3-81	10	_LXV Comp. Assy, Loc A2B07			
			DLXV - Used S/C 10 & above	54278504	54278504	BK4XX
			ELXV - Used S/C 10 & above	54278505	54278505	BK5XX; used on all units except BK5A7V/W & BK5C4C/D
			FLXV - Used S/C 30 & above			Used on BK5A7V/W & BK5C4C/D only
3-22	3-81	10	_LTV Comp. Assy, Loc A2B08			
			FLTV - Used S/C 10 & above	54276907	54276907	
3-22	3-81	10	_LVV Comp. Assy, Loc A2B09			
			MLVV - Used S/C 10 & above	54277713	54277713	BK5XX
			NLVV - Used S/C 10 & above	54277714	54277714	BK4XX
3-22	3-81	10	_SMV Comp. Assy, Loc A2B10			
			6SMV - Used S/C 10 & Above	54154500	54154500	

ENGINEERING RECOMMENDED SPARE PARTS LIST

ITEMS APPEAR ON Fig. No.	Page No.	Index No.	DESCRIPTION	PART NUMBER	REPLACE-MENT PART NUMBER	NOTES
			COMPONENT ASSEMBLIES (Contd)			
			NON-LOGIC			
3-22	3-85	14	_XYV Comp. Assy, Loc A2D1			
			AXYV - Used S/C 10 & above	75838900	75838900	60 pin I/O only
			CXYV - used S/C 10 & above	75838902	75838902	50 pin I/O only
3-22	3-85	15	_XYV Comp. Assy, Loc A2D2			
			BXYV - Used S/C 10 & above	75838901	75838901	Dual channel, 60 pin I/O only
			DXYV - Used S/C 10 & above	75838903	75838903	Dual channel, 50 pin I/O only
3-22	3-87	20	_YDV Comp. Assy, Loc A2C1 (Terminator)			
			AYDV Used S/C 10 & above	75841300	75841300	60 pin I/O only
			BYDV Used S/C 10 & above	75841301	75841301	50 pin I/O only
3-22	3-87	21	_YDV Comp. Assy, Loc A2C2 (Terminator)			
			AYDV - Used S/C 10 & above	75841300	75841300	60 pin I/O only
			BYDV - Used S/C 10 & above	75841301	75841301	50 pin I/O only

ENGINEERING RECOMMENDED SPARE PARTS LIST

ITEMS APPEAR ON Fig. No.	Page No.	Index No.	DESCRIPTION	PART NUMBER	REPLACE-MENT PART NUMBER	NOTES
			COMPONENT ASSEMBLIES (Contd)			
			NON-LOGIC (Contd)			
3-23	3-93	2	_ZYN Comp. Assy. Loc A3A01			
			HZYN - Used S/C 10 & above	75072009	75072009	Not used on Basic units (Basic units do not have control panels)
3-25	3-113	14	_ZJN Comp. Assy, Loc A3A02			
			NZJN - Used S/C 10 & above	75061715	75061715	BK5XX
			PZJN - Used S/C 10 & above	75061716	75061716	BK4XX
3-25	3-113	16	_ZKN Comp. Assy, Loc A3A03			
			CZKN - Used S/C 10 & above	75062105	75062105	BK4XX
			EZKN - Used S/C 10 & above	75062107	75062107	BK5XX
3-25	3-101	30	_ZQN Comp. Assy, Loc A3A05			
			DZQN - Used S/C 10 & above	73485309	73485309	BK4XX
			FZQN - Used S/C 10 & above	73485311	73485311	BK5XX

ENGINEERING RECOMMENDED SPARE PARTS LIST

ITEMS APPEAR ON Fig. No.	Page No.	Index No.	DESCRIPTION	PART NUMBER	REPLACEMENT PART NUMBER	NOTES
			COMPONENT ASSEMBLIES (Contd)			
			NON-LOGIC (Contd)			
3-31	3-133		_VTN Comp. Assy, Loc A3A04			
			5VTN - Used S/C 10 & above	77569100	77569100	All units except Basic
			AVTN - Used S/C 10 & above	77569101	77569101	Basic units only
3-35	3-169		_SJV Comp. Assy, Loc A1A01			3 Card Power Supply only
			5SJV - Used S/C 10 & above	54153300	54153300	
3-36	3-171		_SKV Comp. Assy, Loc A1A02			3 Card Power Supply only
			5SKV - Used S/C 10 & above	54153700	54153700	
3-37	3-173		_SHV Comp. Assy, loc A1A03			3 Card Power Supply only
			ASHV - Used S/C 10 & above	54152901	54152901	
3-38	3-177	10	_XFV Comp. Assy			2 Card Power Supply only
			AXFV - Used S/C 21 & above	75832100	75832100	

ENGINEERING RECOMMENDED SPARE PARTS LIST

ITEMS APPEAR ON Fig. No.	Page No.	Index No.	DESCRIPTION	PART NUMBER	REPLACEMENT PART NUMBER	NOTES
			COMPONENT ASSEMBLIES (Contd)			
			NON-LOGIC (Contd)			
3-39	3-179		_XKV Comp. Assy,			2 Card Power Supply only
			BXKV - Used S/C 21-24	75833702	75833704	
			CXKV - Used S/C 25 & above	75833704	75833704	
			TOOLS AND ACCESSORIES			
			Head Alignment Kit			See table 2-1
			Speed Sensor Adjustment Tool			See table 2-1
			Card Extender Assembly			See table 2-1
			PARTS AND ASSEMBLIES			
3-3	3-23	25	Filter, Air Aluminum, Washable			
3-8	3-39	7				
3-11	3-51	7				
3-12	3-55	14	Used S/C 10 & above	94364902	94364902	Rack Mount Units
			Used S/C 10 & above	00815481	00815481	Cabinet Units

ENGINEERING RECOMMENDED SPARE PARTS LIST

ITEMS APPEAR ON Fig. No.	Page No.	Index No.	DESCRIPTION	PART NUMBER	REPLACEMENT PART NUMBER	NOTES
			PARTS AND ASSEMBLIES (Contd)			
3-23	3-93		Control Panel (A3A01)			
			Used S/C 10 & above	76422501	76422501	Used on all units except basic units & BK5C4R/S
			Used S/C 34 & above	76422504	76422504	used on BK5C4R/S only
3-25	3-99	26	Switch, Pack Cover (A3S3)			
			Used S/C 10 & above	93560002	93560002	
3-25	3-101	38	Head Arm Assy 1, 2, 4			BK5XX only
			Used S/C 10 & above	75010102	75010102	
3-25	3-101	38	Head Arm Assy 0, 3			BK5XX only
			Used S/C 10 & above	75010103	75010103	
3-25	3-101	38	Head Arm Assy (Servo Head)			BK5XX only
			Used S/C 10 & above			

ENGINEERING RECOMMENDED SPARE PARTS LIST

ITEMS APPEAR ON Fig. No.	Page No.	Index No.	DESCRIPTION	PART NUMBER	REPLACEMENT PART NUMBER	NOTES
			PARTS AND ASSEMBLIES (Contd)			
3-25	3-101	38	Head Arm Assy 1, 2, 4 Used S/C 10 & above	75010002	75010002	BK4XX only
3-25	3-101	38	Head Arm Assy 0, 3 Used S/C 10 & above	75010003	75010003	BK4XX only
3-25	3-101	38	Head Arm Assy (Servo Head) Used S/C 10 & above	75010005	75010005	BK4XX only
3-25	3-109	4	Speed Sensor Assy (A3L1) Used S/C 10 & above	77387101	77387101	
3-25	3-117	1	Switch, Solid State, AC (A3K5) (Start Triac) Used S/C 10 & above	94371305	94371305	60 Hz only
3-25	3-117	1	Switch, Solid State, AC (A3K5) (Start Triac) Used S/C 10 & above	94376501	94376501	50 Hz only

ENGINEERING RECOMMENDED SPARE PARTS LIST

ITEMS APPEAR ON Fig. No.	Page No.	Index No.	DESCRIPTION	PART NUMBER	REPLACE-MENT PART NUMBER	NOTES
			PARTS AND ASSEMBLIES (Contd)			
3-25	3-117	8	Belt, Flat Drive			60 Hz only
			Used S/C 10 & above	92314113	92314113	
3-25	3-117	8	Belt, Flat Drive			50 Hz only
			Used S/C 10 & above	92314119	92314119	
3-25	3-117	13	Capacitor, 165 VRMS AC Motor (A3C6)			60 Hz; Used on all units except BK5C1K only
			Used S/C 10 & above	94255116	94255116	
3-25	3-117	13	Capacitor, V AC 220 DC Motor (A3C6)			50 Hz Used on all units except BK5C1J
			Used S/C 10-14	94255115	94255120	
			Used S/C 15-19	94255109	94255120	
			Used S/C 20	94255101	94255120	
			Used S/C 27 & above	94255120	94255120	
3-25	3-117	13	Capacitor, V AC DC Motor (A3C6)			50/60 Hz 100 V; Used on BK5C1J/K only
			Used S/C 33 & above	94255115	94255115	

ENGINEERING RECOMMENDED SPARE PARTS LIST

ITEMS APPEAR ON Fig. No.	Page No.	Index No.	DESCRIPTION	PART NUMBER	REPLACEMENT PART NUMBER	NOTES
			PARTS AND ASSEMBLIES (Contd)			
3-26	3-121		Spindle Assy Used S/C 10 & above	75074714	75074714	BK5XX only
3-26	3-121		Spindle Assy Used S/C 10 & above	75074713	75074713	BK4XX only
3-27	3-123	7	Switch, Mini Integral Actuator (A3S2) Used S/C 10 & above	93786005	93786005	
3-29	3-127	10	Transducer Assy (A3L2) Used S/C 10 & above	76427300	76427300	
3-30	3-129		Drive Motor Kit (A3DM1) Used S/C 10 & above	77398410	47204303	60 Hz; Used on all units except BK5C1K
3-30	3-129		Drive Motor Kit Used S/C 33 & above	77398408	47204302	60 Hz 100V; Used on BK5C1K only

ENGINEERING RECOMMENDED SPARE PARTS LIST

ITEMS APPEAR ON Fig. No.	Page No.	Index No.	DESCRIPTION	PART NUMBER	REPLACEMENT PART NUMBER	NOTES
			PARTS AND ASSEMBLIES (Contd)			
3-30	3-129		Drive Motor Kit (A3DM1)			50 Hz only; used on all units except BK4B7B, BK5A1K, BK5A7M, BK5A9U, BK5C1F&J
			Used S/C 10 - 19	77398413	47204318	
			Used S/C 20 & above	77398419	47204318	
3-30	3-129		Drive Motor Kit			50 Hz 100V; Used on BK5C1J only
			Used S/C 33 & above	77398414	47204306	
3-30	3-129		Drive Motor Kit			50 Hz only; used on BK4B7B, BK5A1K, BK5A7M, BK5A9U, BK5C1F only
			Used S/C 10 & above	77398420	47204319	
3-30	3-129		Hysteresis Brake Feature (A3HB1)			
			Used S/C 10 & above	75241501	75241501	

ENGINEERING RECOMMENDED SPARE PARTS LIST

ITEMS APPEAR ON Fig. No.	Page No.	Index No.	DESCRIPTION	PART NUMBER	REPLACEMENT PART NUMBER	NOTES
			PARTS AND ASSEMBLIES (Contd)			
3-31	3-133	1	Transistor, Darlington Power (Q3, Q4, Q5)			
			Used S/C 10 - 16	50222102	50223703	
			Used S/C 17 & above	50223703	50223703	
3-31	3-133	8	Transistor, Darlington Power (Q1, Q2)			
			Used S/C 10 - 16	50222002	50223603	
			Used S/C 17 & above	50223603	50223603	
3-32	3-135	4	Transformer, Ferro (A1T1)			60 Hz; used W/3 card power supply only
			Used S/C 10 & above	76840400	76840400	
3-32	3-135	4	Transformer, Ferro (A1T1)			50 Hz; used W/3 card power supply only
			Used S/C 10 & above	76846800	76846800	
3-32	3-135	4	Transformer, Ferro (A1T1)			60 Hz; used W/2 card power supply only
			Used S/C 20 & above	76840400	76840400	

ENGINEERING RECOMMENDED SPARE PARTS LIST

ITEMS APPEAR ON Fig. No.	Page No.	Index No.	DESCRIPTION	PART NUMBER	REPLACEMENT PART NUMBER	NOTES
			PARTS AND ASSEMBLIES (Contd)			
3-32	3-135	4	Transformer, Ferro (A1T1)			50 Hz; used W/2 card power supply only
3-33	3-151	4	Used S/C 20 & above	76875700	76875700	
3-32	3-135	13	Switch, Modified, (Run Triac) Used S/C 10 & above	76427404	76427404	60 Hz only
3-32 3-33	3-135 3-151	13 13	Switch, Modified, (Run Triac) (A1K1) Used S/C 10 & above	76427406	76427406	50 Hz only
3-32 3-33	3-137 3-153	30 30	Filter-Air Used S/C 10 & above	94364700	94364700	
3-32 3-33	3-139 3-155	5 5	Capacitor, 21000 µf 50 V Electro (A1C1 A1C2) Used S/C 10 & above	95578111	95578111	
3-32 3-33	3-139 3-155	8 8	Capacitor, 660 V ac NON-PCB (A1C8) Used S/C 10 & above	95686701	95686701	

ENGINEERING RECOMMENDED SPARE PARTS LIST

ITEMS APPEAR ON Fig. No.	Page No.	Index No.	DESCRIPTION	PART NUMBER	REPLACEMENT PART NUMBER	NOTES
			PARTS AND ASSEMBLIES (Contd)			
3-32 3-33	3-135 3-151	8 8	Switch, Deck Interlock (A1S4)	93560002	93560002	
3-32 3-33	3-139 3-155	19 19	Capacitor, 370 V AC 4 µf (A1C5) Used S/C 10 & above	94365800	94365800	
3-32	3-139	20	Blower Assy (A1BM1) Used S/C 10 & above	75240304	75240304	60 Hz only
3-32	3-139	20	Blower Assy (A1BM1) Used S/C 10 & above	75240305	75240305	50 Hz only
3-32	3-155	20	Blower Assy (A1BM1) Used S/C 10 & above	75240307	75240307	50 Hz only
3-32 3-33	3-141 3-157	38 38	Capacitor, 65 V DC, 21000 µf (Servo) (A1C3) Used S/C 21 & above	95578108	95578108	Used W/2 card power supply only
3-32	3-143	1	Elapsed Time Meter, 115 V AC (A1M1) Used S/C 10 & above	94313800	94313800	60 Hz only

ENGINEERING RECOMMENDED SPARE PARTS LIST

ITEMS APPEAR ON Fig. No.	Page No.	Index No.	DESCRIPTION	PART NUMBER	REPLACEMENT PART NUMBER	NOTES
			PARTS AND ASSEMBLIES (Contd)			
3-32	3-143	1	Elapsed Time Meter, 240 V AC (A1M1)			50 Hz; Used on all units except BK5C1J
3-33	3-159	1	Used S/C 10 & above	94313807	94313807	
3-32	3-143	1	Elapsed Time Meter, 115V (A1M1)			50 Hz 100V; Used on BK5C1J only
			Used S/C 33 & above	94313801	94313801	
3-32	3-143	8	Circuit Breaker, 15A 240 V AC Long (A1CB1)			60 Hz only
			Used S/C 10-13	94345218	94345218	
			Used S/C 14 & above	94245217	94245217	
3-32	3-143	8	Circuit Breaker, 8A 240 V AC Long (A1CB1)			50 Hz; Used on all units except BK5C1J
3-33	3-159	8	Used S/C 10-13	94345206	94345206	
			Used S/C 14 & above	94245205	94245205	
3-32	3-143	8	Circuit Breaker, 15A 240 V AC (A1CB1)			50 Hz 100V; Used on BK5C1J only
			Used S/C 33 & above	94245207	94245207	

ENGINEERING RECOMMENDED SPARE PARTS LIST

ITEMS APPEAR ON Fig. No.	Page No.	Index No.	DESCRIPTION	PART NUMBER	REPLACEMENT PART NUMBER	NOTES
			PARTS AND ASSEMBLIES (Contd)			
3-32	3-143	9	Circuit Breaker, 5A 125 V AC (A1CB2)			60 Hz only
			Used S/C 10 & above	92696065	92696065	
3-32	3-143	9	Circuit Breaker, 5A 250 V AC A1CB2)			50 Hz; Used on all units except BK5C1J
3-33	3-159	9	Used S/C 10 only	92696069	92696079	
			Used S/C 11 & above	92696079	92696079	
3-32	3-143	9	Circuit Breaker, 8A 250 V AC (A1CB2)			50 Hz 100V; Used on BK5C1J only
			Used S/C 33 & above	9269081	92696081	
3-32	3-143	18	Filter, Line (A1FL1)			
			Used S/C 10 - 33	94371200	94371200	60 Hz only
			Used S/C 34 & above	92009801	92009801	
3-32	3-143	18	Filter, Line (A1FL1)			50 Hz only
3-33	3-159	18	Used S/C 10 - 30	83222200	83222200	
			Used S/C 31 & above	92009801	92009801	

ENGINEERING RECOMMENDED SPARE PARTS LIST

ITEMS APPEAR ON Fig. No.	Page No.	Index No.	DESCRIPTION	PART NUMBER	REPLACEMENT PART NUMBER	NOTES
			PARTS AND ASSEMBLIES (Contd)			
3-32	3-145	32	Varistor			50 Hz only
3-32	3-149	28	Used S/C 10 & above	94395600	94395600	
3-33	3-161	35				
3-33	3-165	32				
3-35	3-169	3	Fuse, Quick Acting, 6 Amp			
			Used S/C 10 - 23	95647605	95647605	
3-36	3-171	4	Fuse, Quick Acting, 2 Amp			
			Used S/C 10 - 23	95647602	95647602	
3-37	3-173	11	Fuse, Quick Acting, 6 Amp			
			Used S/C 10 - 23	95647605	95647605	
3-39	3-179	11	Fuse, Quick Acting, 8 Amp			
			Used S/C 24 only	95647605	95647606	
			Used S/C 25 & above	95647606	95647606	
3-39	3-179	13	Fuse, Quick Acting, 5 Amp			
			Used S/C 24 & above	95647604	95647604	

APPENDIX A

DECISION LOGIC TABLES

(DLTs)

for SMDs with 2 Card Power Supplies

CONTENTS

FIGURES

TABLES

DECISION LOGIC TABLES (DLTs)

INTRODUCTION

Decision logic tables help maintenance technicians organize their thinking when problems occur in the drive. For a given fault condition (or set of conditions), actions are recommended to locate and correct the fault. The actions are arranged so that the corrective measures that are easiest to perform (checking a fuse or changing a card in the logic chassis, for example) are listed before the more difficult tasks such as replacing the head/arm assembly or drive motor.

A Useful Troubleshooting Aids section contains two general-interest maintenance procedures, as well as a voltages-used table that should prove helpful throughout the troubleshooting effort.

The DLTs consist of 11 tables, described briefly below.

- DLT 1 shows how to correct problems that occur when attempting to "power-up" the drive, including the failure of any of the three dc power supplies.
- DLT 2 helps to define the origin of ±5 V load fault - either in the loads or in the supply itself.
- DLT 3 shows how to isolate a ±5 V load fault to a given area or electrical component.
- DLTs 4, 5, and 6 show how to locate and correct faults in the ±20 V loads, ±12 V loads, and ±42 V loads.
- DLTs (7 through 10 are used with the FTU (TB303) to correct various seek and read/write errors).
- DLT 11 shows what to do when a drive does not "power-down" properly.

The procedures referred to in the DLTs form the last portion of this discussion.

USING THE DLT

The DLT is divided into four quadrants. The upper-left quadrant, CONDITIONS, contains the various test conditions that can be answered "yes" or "no". The CONDITIONS quadrant is prefaced by any ASSUMPTIONS (that is, pre-conditions) that must be observed if the test results are to be valid. Sometimes, prerequisite actions other than the ASSUMPTIONS must be taken before the test for a given condition is made. Such steps are included in the CONDITIONS quadrant. The yes (Y) or no (N) answers to each condition are shown in numbered columns in the top-right Situations quadrant.

To use the DLT, first determine whether the result of a condition tested is Y or N. If two or more conditions exist simultaneously, look for a situations column that combines the appropriate Y-N answers for those conditions. A dash (-) in the top-right Situations quadrant means that the related Condition is not a factor in determining what actions are to be taken for that situation.

Next, determine what action should be taken for a given test result (i.e., situation) by following down the selected column to the row marked "1" in the lower-right Sequence quadrant. (If there is only one recommended action for a given situation, an "X" appears instead of the "1".) The recommended action is then located by moving across to the lower-left ACTIONS quadrant. A dash in a column of the Sequence quadrant indicates that the related Action isn't applicable.

After taking the first recommended action, repeat the test that gave rise to the situation. If the test results haven't changed (same situation), try recommended action 2, and so on, being sure to repeat the test after each such action.

Column 1 is generally reserved for an "everything OK" situation. If a DLT requires more than one sheet, this "no problem" column is repeated on each sheet. Similarly, the last ACTION on each sheet is a recommendation to "call field support". Don't brood over your inadequacy if you reach this last entry; not every situation can be covered in a DLT.

USEFUL TROUBLESHOOTING AIDS

USING A VOM TO CHECK A CAPACITOR

1. Remove power from the equipment.

2. Discharge capacitor by momentarily shorting the leads with a jumper wire. (Use screwdriver for large capacitors.)

3. Isolate the capacitor by disconnecting one lead from the circuit.

4. Set VOM to X1000 (ohms) scale.

5. Connect the VOM across the capacitor leads. The condition of the capacitor is interpreted as follows:

Meter reading	Interpretation
Needle goes rapidly to full scale (0Ω), then regresses to infinity (oo). (See NOTE.)	Capacitor OK
Needle goes rapidly to full scale and remains there.	Capacitor shorted
Needle deflects slightly or not at all.	Capacitor open

NOTE

Speed with which needle returns to infinity (oo) is a function of capacity rating. Return swing is rapid for small capacitors, becoming slower as capacity increases. To a lesser degree, return swing is also dependent upon which meter scale is used.

IN-CIRCUIT DIODE CHECKING WITH A VOM

A diode that is suspect can be given a preliminary check without disconnecting it from the circuit. Merely check the diode twice, reversing the meter leads between the two readings. Of course, power should be off, and for your own peace of mind any capacitors in the circuit should be discharged.

Keep in mind that the forward drop across a good diode is in the range 5 - 15 Ω; the reverse drop is on the order of 1 MΩ. Parallel resistances in the circuit will, of course, significantly reduce the higher of these two readings, but if one is low and the other high, chances are the diode is OK. If both are low, the diode is probably shorted; if both are high, it's probably open.

This check can also be used for a bridge rectifier. You'll probably want to check at least two diodes in the bridge, because back-circuits may give different readings across different diodes.

TABLE A-1. VOLTAGES USED BY ELECTRONIC COMPONENTS
(Sheet 1 of 2)

	A1 - Power Supply								A3 - Deck				
Voltages	Servo Cap Board C1	C2	Run Triac K1	Em. Retr. Relay K2	Contr Pnl A01	Hd Rd A02	Sel Amp	Writer A03	Pwr Amp A04	Servo Pre-Amp A05	Start Triac K5	Hyst Brake HB1	Pack Cover Sol L3	VC1
+5 V			x		x		x	x			x			
-5 V							x	x						
+12 V							x			x				
-12 V							x			x				
+20 V				x			x					x		x
-20 V														
+42 V	x							x	x					
-42 V		x							x					

TABLE A-1. VOLTAGES USED BY ELECTRONIC COMPONENTS
(Sheet 2)

A2 - Logic Chassis

Voltages	A01	A02	A03	A04	A05	A06	A07	A08	A09	A10	B01	B02	B05	B06	B07	B08	B09	B10
+5 V	x	x	x	x	x	x	x	x	x	x	x	x	x	x	x	x	x	x
-5 V	x	x	x	x	x	x		x	x	x	x	x	x		x			
+12 V																		
-12 V																		
+20 V	x	x	x	x	x	x	x	x	x	x								
-20 V	x	x	x	x	x	x	x	x	x									
+42 V				x					x	x								
-42 V				x					x									

DECISION LOGIC TABLES

DLT 1 POWER UP (sheet 1 of 2)

Warning: Tuning capacitor A1C8 is charged to 440 volts. Treat it with respect!

Enters from: Assumptions

Procedures: B

References: Logic Diagrams

Exits to: Sheet 2, or DLT 2

Assumption:
1. Drive connected to ac power
2. Disk pack installed
3. Attempt to power up and start drive from SMD panel.

CONDITIONS	1	2	3	4	5	6	7	8
1. Turn on AC POWER brkr (CB1). Does CB1 trip?	N	Y	N	N	N	N	N	-
2. Does blower motor start when CB1 is actuated?	Y	-	N	N	Y	-	-	-
3. Do door fans start when CB1 is actuated?	Y	-	N	Y	N	-	-	-
4. POWER SUPPLY brkr (CB2) trips when actuated?	N	-	-	-	-	Y	-	-
5. Does CB1 or drive motor thermal brkr trip when CB2 is actuated?	N	-	-	-	-	-	Y	-
6. Is smell of burning insulation detected soon after turning on CB2?	N	-	-	-	-	-	-	Y
ACTIONS								
1. Continue with Condition 7 on sheet 2.	X							
2. If pwr plug customer-provided, chk phase and gnd connections.		1	1					
3. Suspect blower. Separate P/J301; if trouble persists, blower is OK.		2						
4. Suspect time meter. Disconnect, then try again to verify.		3						
5. Suspect door fans. Separate P/J400, then try again to verify.		4						
6. Suspect CB1--check continuity.			2					
7. Check for ac in and out of line filter.			3					
8. Chk for open blower motor, cable, or blower motor capacitor A1C5.				1				
9. Suspect shorted tuning cap (A1C8). See WARNING above.						1		
10. Suspect short in -XKV (p.s.) board. To check, do steps 1-5 of Procedure B.						2		
11. Suspect short in T1 wiring or T1 itself. To check, go to step 6 of Procedure B.						3		
12. Suspect Run triac energized before START switch has been pressed. Troubleshoot logic, starting with card A2A10.							1	
13. Chk Run triac for shorted LOAD contacts (terminals 1,2).							2	
14. You have lost +5 V power. IMMEDIATELY TURN OFF CB2 TO PREVENT BURNING UP THE VOICE COIL. To check on voltage loss, go to sheet 2.								X
15. Check continuity of door fans and cabling.					1			
16. Call Field Support.	-	5	4	2	2	4	3	-

KØR-0679-2

DLT 1 POWER UP (sheet 2 of 2)

Warning: Tuning capacitor A1C8 is charged to 440 volts!

Enters from: Sheet 1

Procedures: C

References: Logic Diagrams, DLT 7

Exits to: DLT 2, DLT 8

Assumption:
1. Drive connected to ac power
2. Disk pack installed
3. Attempt to power up and start drive from SMD panel.

	CONDITIONS	1	9	10	11	12	13	14	15
7.	Press START switch. Does either CB1 or drive thermal brkr trip?	N	Y	N	N	N	N	N	N
8.	Does START light come on when START sw is pressed?	Y	-	N	N	Y	Y	Y	Y
9.	Does drive motor start when START sw is pressed?	Y	-	Y	N	N	Y	Y	Y
10.	Does drive motor come up to speed?	Y	-	-	-	-	N	Y	Y
11.	Do heads load? (READY light comes on.)	Y	-	-	-	-	-	N	Y
12.	Does drive motor cut out after 15-second timeout expires?	N	-	-	-	-	Y	-	N
13.	Does CB2 (PS brkr) trip after drive has been operating normally?	N	-	-	-	-	-	-	Y
	ACTIONS								
17.	Power-up and First Seek completed properly. Go to DLT 8.	X	-	-	-	-	-	-	-
18.	Suspect shorted Start triac (A3K5).	-	1	-	-	-	-	-	-
19.	Suspect shorted drive motor start capacitor (A3C6).	-	2	-	-	5	-	-	-
20.	Suspect open Start winding in drive motor.	-	3	-	-	8	-	-	-
21.	START indicator burned out. Replace START ind/sw.	-	-	1	-	-	-	-	-
22.	Check all interlocks.	-	-	-	1	-	-	-	-
23.	Go to DLT 2 to check for presence of +5 volts.	-	-	-	2	-	-	-	-
24.	Chk that Local/Remote sw (card A10) is set to LOCAL.	-	-	-	-	1	-	-	-
25.	Chk drive motor thermal brkr. If tripped, check cause.	-	-	-	-	2	-	-	-
26.	Suspect Run logic--start with card A10.	-	-	-	-	3	-	-	-
27.	Suspect Run triac (A1K1).	-	-	-	-	4	1	-	-
28.	Check hysteresis brake for mechanical binding.	-	-	-	-	6	2	-	-
29.	Suspect brake logic continuously energized--card A10.	-	-	-	-	7	3	-	-
30.	Suspect speed sensor and/or attendant logic--card A10.	-	-	-	-	-	4	-	-
31.	Suspect open Run winding on drive motor.	-	-	-	-	9	-	-	-
32.	Refer to DLT 7--First Seek.	-	-	-	-	-	-	X	-
33.	Suspect overloaded (overheated) power supply. Go to Procedure C.	-	-	-	-	-	-	-	1
34.	Call Field Support.	-	4	2	3	10	5	-	2

KØR-0679-2

DLT 2 — DC VOLTAGE CHECK

Warning: Tuning capacitor A1C8 is charged to 440 volts. Treat it with respect!

Enters from: DLT 1 or when a dc voltage is suspect

Procedures: A

References: Logic Diagrams

Exits to: DLTs 3,4,5,6; or DLT 1 if this table was entered from Actions 14 or 22 of DLT 1.

Assumption: Lack of one or more dc voltages is indicated or suspected. Initial voltage measurements are made with all dc loads connected, using Procedure A.

CONDITIONS	1	2	3	4	5	6	7	8	9	10	11	12
1. ±5 voltages OK with load?	Y	N	N	N	N	-	-	-	-	-	-	-
2. With ±5 V loads disconnected, is there +5 V at J2-03 and -5V at J2-05? (Use J2-01 as ground.) (1)	-	-	Y	N	N	-	-	-	-	-	-	-
3. ±12, ±20, ±42 voltages significantly low?	N	-	-	-	Y	-	-	-	-	-	-	-
4. ±20 voltages OK?	Y	-	-	-	-	N	N	-	-	-	-	-
5. 20 V fuse(s) blown? (2)	N	-	-	-	-	N	Y	-	-	-	-	-
6. ±12 voltages OK with load?	Y	-	-	-	-	-	-	N	-	-	-	-
7. With ±12 V loads disconnected, is there +12 V at J2-10 and -12 V at J2-08? (Use J2-01 as ground.) (1) (3)	-	-	-	-	-	-	-	-	N	Y	-	-
8. ±42 voltages OK?	Y	-	-	-	-	-	-	-	-	-	N	N
9. 42 V fuse(s) blown? (2)	N	-	-	-	-	-	-	-	-	-	N	Y
ACTIONS												
1. DC voltages all OK.	X	-	-	-	-	-	-	-	-	-	-	-
2. Separate P/J2 (on -XKV brd) and try again, checking Condition 2.	-	X	-	-	-	-	-	-	-	-	-	-
3. Trouble is in the ±5 V loads. Go to DLT 3.	-	-	X	-	-	-	-	-	-	-	-	-
4. Replace -XKV board or, optionally, the entire p.s. assembly.	-	-	-	1	-	1	-	-	1	-	1	-
5. Suspect open A1C8. See WARNING, above.	-	-	-	-	1	-	-	-	-	-	-	-
6. Trouble is in the ±20 V loads. Go to DLT 4.	-	-	-	-	-	-	X	-	-	-	-	-
7. Separate P/J2 and try again, checking Condition 7.	-	-	-	-	-	-	-	X	-	-	-	-
8. Trouble is in the ±12 V loads. Go to DLT 5.	-	-	-	-	-	-	-	-	-	X	-	-
9. Trouble is in the ±42 V loads. Go to DLT 6.	-	-	-	-	-	-	-	-	-	-	-	X
10. Call Field Support.	-	-	-	2	2	2	-	-	2	-	2	-

(1) Reconnect P/J2 before going to next Condition.

(2) Check with VOM. Fuse is bad if supply voltage does not appear on both sides of fuse. (Use J2-01 as ground.)

(3) If no voltage, check the 39Ω resistors. An open resistor means a drastic overload has occurred. Be sure to check out the loads (DLT 5) after replacing the supply.

KØR-0679-3

DLT 3 ISOLATING FAULTS IN THE ±5 V LOADS

Warning: None

Enters from: DLT 2

Procedures: D

References: None

Exits to: DLT 1 to complete the Power-Up diagnostic

Assumption: P/J2 on power supply (-XKV brd) has been reconnected so as to provide a load for the ±5 V supply. Start each Condition by turning off PS brkr (CB2).

CONDITIONS	1	2	3	4	5	6	7	8	9	10	11	12
1. Check out the logic chassis:												
a) Remove Faston from A1K1-3 (Run triac).												
b) Remove Faston from A3K5-3 (Start triac).												
c) Separate connectors P/JA80 and P/JA81.												
d) Turn on CB2. Is ±5 V present at logic chassis Fastons?	Y	N	-	-	-	-	-	-	-	-	-	-
2. Add Control Panel (A3A01) to ±5 V load:												
a) Reconnect P/JA80.												
b) Turn on CB2. Is ±5 V still present at logic chassis Fastons?	-	-	Y	N	-	-	-	-	-	-	-	-
3. Reconnect Run triac Faston. Turn on CB2. Is ±5 V still present?	-	-	-	-	Y	N	-	-	-	-	-	-
4. Reconnect Start triac Faston. Turn on CB2. ±5 V still present?	-	-	-	-	-	-	Y	N	-	-	-	-
5. Add A3A02 (Hd Sel/Rd Amp) and A3A03 (Writer) to ±5 V load:												
a) Reconnect P/JA81.												
b) Turn on CB2. Is ±5 V still present at logic chassis?	-	-	-	-	-	-	-	-	Y	N	-	-
6. Isolate A3A03 from A3A02:												
a) Remove piggy-back writer board (A3A03) from A3A02.												
b) Turn on CB2. Is ±5 V still present at logic chassis?	-	-	-	-	-	-	-	-	-	-	Y	N
ACTIONS												
1. ±5 V to logic chassis is OK. Go to Condition 2.	X	-	-	-	-	-	-	-	-	-	-	-
2. ±5 V fault is in logic chassis. To correct, go to Procedure D.	-	X	-	-	-	-	-	-	-	-	-	-
3. ±5 V to control panel is OK. Go to Condition 3.	-	-	X	-	-	-	-	-	-	-	-	-
4. Replace control panel (A3A01).	-	-	-	X	-	-	-	-	-	-	-	-
5. Run triac is OK. Go to Condition 4.	-	-	-	-	X	-	-	-	-	-	-	-
6. Replace Run triac (A1K1).	-	-	-	-	-	X	-	-	-	-	-	-
7. Start triac is OK. Go to Condition 5.	-	-	-	-	-	-	X	-	-	-	-	-
8. Replace Start triac (A3K5).	-	-	-	-	-	-	-	X	-	-	-	-
9. ±5 V distribution is OK.	-	-	-	-	-	-	-	-	X	-	-	-
10. Go to Condition 6.	-	-	-	-	-	-	-	-	-	X	-	-
11. Replace writer board (A3A03).	-	-	-	-	-	-	-	-	-	-	X	-
12. Replace Hd Sel/Rd Amp board (A3A02).	-	-	-	-	-	-	-	-	-	-	-	X

KØR-0679-3

DLT 4 ISOLATING FAULTS IN THE ±20 V LOADS

Warning: None

Enters from: DLT 2

Procedures: D

References: DLT 5

Exits to: DLT 1 to complete the Power-Up diagnostic

Assumption: The ±20 V supply is known to be good, but F1 or F2 blows when an attempt is made to power up the drive with the ±20 V loads connected. Replace blown fuse(s) before testing Conditions 1 or 2.

CONDITIONS	1	2	3	4	5	6	7	8
1. Eliminate all ±20 V loads except the logic chassis:								
a) Turn off POWER SUPPLY breaker (CB2).								
b) Separate P/JA81. (1)								
c) Turn on CB2. Does F1 or F2 blow? (2)	N	Y	-	-				
2. Add A3A02 (Hd Sel/Rd Amp) to ±20 V load:								
a) Turn off CB2.								
b) Reconnect P/JA81.								
c) Turn on CB2. Does F1 or F2 blow? (2)	-	-	N	Y				

ACTIONS								
1. ±20 V load in logic chassis is OK. Go to Condition 2.	X	-	-	-				
2. To check ±20 V fault in logic chassis, go to Procedure D.	-	X	-	-				
3. ±20 V distribution is OK. Chances are that the fault appears only when the logic connects the emergency retract relay coil or the hysteresis brake to +20 V. Most probable cause is a shorted (grounded) coil in one of these components.	-	-	1	-				
4. Replace A3A02.	-	-	-	1				
5. Call Field Support.	-	-	2	2				

(1) This retains the ±12 V (unfused) power to the servo preamp, A3A05. The alternative is to disconnect P/J8, which is not recommended because reconnecting the cable to A3A05 isn't easy. In any event, the 12-volt regulators have current limiters that prevent damage to the supply or components if the ±12 V loads are faulty.

(2) Fuse integrity is most easily checked by monitoring the ±20 V Faston connectors at the logic chassis. If in doubt, ohm-out the fuse. (On the bench--not in the supply!)

KØR-0679-2

DLT 5 ISOLATING FAULTS IN THE ±12 V LOADS

Warning: None

Enters from: DLT 2

Procedures: None

References: Table A-2 in Procedure A

Exits to: DLT 1 to complete the Power-Up diagnostic

Assumption: The ±12 V supply is known to be good, but when the ±12 V load is connected, voltage readings per Procedure A indicate a load fault.

CONDITIONS	1	2	3	4	5	6	7	8
1. Limit the ±12 V load to A3A05 (servo preamp):								
a) Turn off POWER SUPPLY breaker (CB2).								
b) Separate P/JA81.								
c) Turn on CB2, then wait one minute before going to d), below.								
d) Check for +12 V and -12 V, using probe points given in table A-2 of Procedure A. Are voltages present?	Y	N	-	-	-	-		
2. Does the magnitude of the two voltage readings differ by 0.6 V or more? [e.g., (+12)−(-11.2) = 0.8 V magnitude dif.]	-	-	N	Y	-	-		
3. Add A3A02 (Hd Sel/Rd Amp) to ±12 V load:								
a) Turn off CB2.								
b) Reconnect P/JA81.								
c) Turn on CB2.								
d) Check voltages as in Condition 1d. Are voltages within the tolerance specified in table A-2 of Procedure A?	-	-	-	-	N	Y		
ACTIONS								
1. Go to Condition 2.	X	-	-	-	-	-		
2. Replace A3A05 board.	-	1	-	-	-	-		
3. Servo preamp is OK. Go to Condition 3.	-	-	X	-	-	-		
4. A voltage difference here could cause unequal amplification of servo dibits, giving an On Cylinder null signal that is not centered over the servo track. This "permanent offset" could cause Read errors in a pack written on another drive, or when a pack written on this drive was read on another drive. You may wish to replace A3A05 rather than take that chance. Now go to Condition 3.	-	-	-	X	-	-		
5. Replace A3A02 board.	-	-	-	-	1	-		
6. ±12 V loads are OK. Go back to DLT 1.	-	-	-	-	-	X		
7. Call Field Support.	-	2	-	-	2	-		

KØR-0679-2

DLT 6 ISOLATING FAULTS IN THE ±42 V LOADS

Warning: None

Enters from: DLT 2

Procedures: D

References:

Exits to: DLT 1 to complete the Power-Up diagnostic

Assumption: All power supplies are known to be good, but F3 or F4 blows when the ±42 V loads are connected. Start each Condition by turning off PS brkr (CB2).

CONDITIONS	1	2	3	4	5	6	7	8
1. Limit the ±42 V load to servo capacitors A1C1 and A1C2:								
a) Separate P/J200 (on pwr amp brd, A3A04).								
b) Turn on CB2. Does either F3 or F4 blow? (1)	N	Y	-	-	-	-	-	-
2. Add power amp (A3A04) to ±42 V load:								
a) Remove PA09 from w/w pins at location A09 of logic chassis.								
b) Reconnect P/J200.								
c) Turn on CB2. Does either F3 or F4 blow? (1)	-	-	N	Y	-	-	-	-
3. Add logic chassis to ±42 V load:								
a) Reconnect P/JA09 (on logic chassis backpanel).								
b) Separate P/JA81 (on logic chassis).								
c) Turn on CB2. Does either F3 or F4 blow? (1)	-	-	-	-	N	Y	-	-
4. Add writer (A3A03) to ±42 V load:								
a) Reconnect P/JA81.								
b) Turn on CB2. Does either F3 or F4 blow? (1)	-	-	-	-	-	-	Y	N
ACTIONS								
1. Servo caps are OK. Go to Condition 2.	X	-	-	-	-	-	-	-
2. Replace A1C1 (+42) or A1C2 (-42), depending upon which fuse blew.	-	1	-	-	-	-	-	-
3. Power amp is OK. Go to Condition 3.	-	-	X	-	-	-	-	-
4. Replace power amp (A3A04).	-	-	-	1	-	-	-	-
5. ±42 V in logic chassis is OK. Go to Condition 4.	-	-	-	-	X	-	-	-
6. ±42 V fault in logic chassis. To check out, go to Procedure D.	-	-	-	-	-	X	-	-
7. Replace Writer (A3A03).	-	-	-	-	-	-	1	-
8. ±42 V loads now check out OK. Return to DLT 1.	-	-	-	-	-	-	-	X
9. Call Field Support.	-	2	-	2	-	-	2	-

(1) Test fuse with a VOM between ground and each side of fuse. No voltage on one side, fuse blown. Voltage on both sides, fuse OK. (Or remove fuse and ohm it out.)

KØR-0679-2

DLT 7 FIRST SEEK (sheet 1 of 2)

Warning: None

Enters from: DLTs 1 through 6

Procedures: See sheet 2

References: Logic diagrams

Exits to: DLT 8 or sheet 2 of this DLT

Assumption: START light is on, drive is coming up to speed.

CONDITIONS	1	2	3	4	5	6	7	8
1. READY light comes on, signifying successful First Seek?	Y	N	N	N	N	N		
2. First Seek attempted?	-	N	N	N	N	N		
3. Check that Heads Loaded switch (A3S2) is transferring:								
a) Press START sw to stop disk. Do not turn off breakers.								
b) Manually push voice coil forward to move heads off unloading ramp. Does voice coil resist fwd movement?	-	-	N	Y	Y	Y		
4. Check for forward drive to voice coil:								
a) Disconnect black lead from voice coil (term. 2 in c.r. 282).								
b) Attach + probe of VOM to black wire, com. probe to logic gnd.								
c) Press START.								
d) Wait 15-20 sec for up-to-speed time out to expire, then chk VOM. Does VOM read approx +40 V?	-	-	-	-	N	Y		

ACTIONS								
1. No problem--go to DLT 8.	X	-	-	-	-	-		
2. Go to Condition 3.	-	X	-	-	-	-		
3. Suspect leads to (or contacts in) E.R. relay A1K2.	-	-	1	-	-	-		
4. Suspect open voice coil.	-	-	2	-	-	-		
5. Replace A3S2 (Hds Loaded sw).	-	-	3	-	-	-		
6. Replace power amp ass'y.	-	-	4	-	6	-		
7. A3S2 is OK. Go to Condition 4 to chk fwd drive on voice coil.	-	-	-	X	-	-		
8. Suspect card A09 (pwr amp control).	-	-	-	-	1	-		
9. Suspect card B09 (direction control).	-	-	-	-	2	-		
10. Suspect card A07 (summing amp).	-	-	-	-	3	-		
11. Suspect card B06 (diff cntr, CAR).	-	-	-	-	4	-		
12. Suspect card A10 (speed control).	-	-	-	-	5	-		
13. Voice coil should attempt First Seek upon expiration of up-to-speed timeout. Go to Condition 5 on sheet 2.	-	-	-	-	-	X		
14. Call Field Support.	-	-	5	-	7	-		

KØR-0679-2

DLT 7 FIRST SEEK (sheet 2 of 2)

Warning: None

Enters from: Sheet 1

Procedures: Head-Arm Replacement (section 2D); Hd-Arm Alignment (section 2C)

References: Logic Diagrams

Exits to: DLT 8

Assumption: START light is on; drive attempts First Seek.

	CONDITIONS	7	8	9	10	11	12	13
1.	READY light indicates successful First Seek? (From sheet 1.)	N	N	N	N	N	N	N
2.	First Seek attempted? (From sheet 1.)	Y	Y	Y	Y	Y	Y	Y
5.	Drive attempts First Seek, then unloads?	Y	Y	Y	Y	-	-	-
6.	Servo preamp input to card A03 OK?	-	N	Y	Y	-	-	-
7.	Track Servo signal present at A03-09B?	-	-	N	Y	-	-	-
8.	Drive seeks to forward mechanical stop, FAULT light comes on (+42 fuse blows) but heads don't unload--unit can't pwr down?	-	-	-	-	Y	-	-
9.	Drive seeks to fwd mech stop, waits for FAULT light (+42 fuse blows), then retracts?	-	-	-	-	-	Y	-
10.	Drive loads heads, hesitates, then creeps to fwd EOT?	-	-	-	-	-	-	Y
	ACTIONS							
15.	Not sensing dibits. Chk servo preamp input to card A03 pin 23B (+ dibits) and A03-25B (- dibits), then go to Condition 6.	X	-	-	-	-	-	-
16.	Chk for continuity/gnds in servo preamp cable (input to A03).	-	1	-	-	-	-	-
17.	Replace A3A05 (servo preamp).	-	2	-	-	-	-	-
18.	Replace and align servo head (see Procedures, above).	-	3	-	-	-	-	-
19.	Suspect card A03.	-	-	1	-	-	-	-
20.	Suspect propagation of Track Servo signal logic through cards A08, A07, A09, B09.	-	-	-	1	-	-	-
21.	Replace power amp A3A04.	-	-	-	-	3	2	-
22.	Suspect velocity transducer and attendant logic on cards A08, A09, B09.	-	-	-	-	2	-	-
23.	Check Fine Enable logic (cards A08, B09).	-	-	-	-	1	-	1
24.	Suspect cards A03, A07, A09.	-	-	-	-	-	1	2
25.	Call Field Support.	-	4	2	2	4	3	3

KØR-0679-2

DLT 8 RTZ/CONTINUOUS SEEKS

Warning: None

Enters from: DLT 7

Procedures: None

References: Logic Diagrams

Exits to: DLT 9

Assumption:
1. TB304 FTU is connected to drive via A and B I/O cables
2. Local/Remote switch on drive (card A10) set to REMOTE
3. LAP installed and drive selected from FTU.

CONDITIONS	1	2	3	4	5	6	7	8
1. Actuate RTZ sw on FTU. Is RTZ seek successful?	Y	N	-	-	-			
2. Set up and perform continuous seeks.								
a) Set FTU's Access Mode sw to CONT.								
b) Set all FTU Cyl Adrs switches to "off" (down).								
c) Actuate START sw (on FTU).								
d) Sequentially select/deselect cylinder address switches								
(1,2,4...256, 512) to step actuator between track 0 and								
track selected by active cyl adrs switch.								
Is Continuous Seek successful?	Y	-	N	-	-			
3. Select track (cyl) 822 on FTU panel:								
• Set Cyl Adrs switches to 1466_8; START.								
Was seek to track 822 successful?	Y	-	-	N	-			
4. Select track (cyl) 823 on FTU panel:								
• Set Cyl Adrs switches to 1467_8; START.								
Does Seek Error result when seeking to track 823?	Y	-	-	-	N			
ACTIONS								
1. Seeks properly executed. Go to DLT 9.	X	-	-	-	-			
2. Replace card B08 (Access Control, Index/Sector Decode).	-	1	1	1	1			
3. Replace card B09 (Access Control 1).	-	2	-	-	-			
4. Replace card A08 (Access Control 2).	-	3	-	-	-			
5. Replace card A07 (D/A Function Generator).	-	4	3	3	3			
6. Replace cards B02 (Ch 1 rcurs), B04 (Ch 2 rcurs).	-	5	4	4	4			
7. Replace card B06 (Diff Generator and Control).	-	-	2	2	2			
8. Call Field Support.	-	6	5	5	5			

KØR-0679-2

DLT 9 WRITE/WRITE FORMAT (sheet 1 of 2)

Warning: None

Enters from: DLT 8

Procedures: None

References: Logic Diagrams

Exits to: DLT 10 or sheet 2 of this DLT

Assumption: 1. FTU connected to drive and FTU switches set per "Preliminary Set-up" in Operation section of TB304 manual. In addition, FTU Wrt-Rd Select switch set for either WRT or WRT FORMAT operation.

CONDITIONS	1	2	3	4	5	6	7	8
1. FAULT indication is given when drive is connected to controller but not when connected to FTU?	N	Y	-	-				
2. FAULT light on FTU panel comes on?	N	N	Y	Y				
3. FAULT light on SMD panel comes on?	N	N	N	Y				
ACTIONS								
1. No problem. Go to DLT 10.	X							
2. Check that Write Protect switches are OFF.		X						
3. Check that +5 V is present at operator panel (-ZYN brd). If present, replace -ZYN board.			X					
4. Go to Condition 4 on sheet 2.				X				

KØR-0679-2

DLT 9 WRITE/WRITE FORMAT (sheet 2 of 2)

Warning: None

Enters from: Sheet 1

Procedures: None

References: Logic Diagrams

Exits to: DLT 10

Assumption: 1. FTU connected to drive and FTU switches set per "Preliminary Set-up" in Operation section of TB304 manual. In addition, FTU Wrt-Rd Select switch set for either WRT or WRT FORMAT operation.

	CONDITIONS	5	6	7	8	9	10	11	12	13	14		
2,3.	FAULT indications on both SMD and FTU panels? (From sheet 1.)	Y	Y	Y	Y	Y	Y	Y	Y	Y	Y		
4.	Is fault limited to certain groups of contiguous addresses?	Y	N	-	-	-	-	-	-	-	-		
5.	Does fault appear only for WRT FORMAT operations?	-	-	Y	N	-	-	-	-	-	-		
6.	Set FTU Addr/Sect Mk switch to SECT MK and try again.												
	Does FAULT light still come on?	-	-	-	-	N	Y	-	-	-	-		
7.	Check LEDs on operator panel:												
	a) WRT FLT on?	-	-	-	-	-	-	Y	-	-	-		
	b) HD SEL FLT on?	-	-	-	-	-	-	-	Y	-	-		
	c) WR · RD FLT on?	-	-	-	-	-	-	-	-	Y	-		
	d) $\overline{\text{ON CYL}}$ · (W + R) on?	-	-	-	-	-	-	-	-	-	Y		
	ACTIONS												
5.	Replace card B06 (Cyl Addr Reg).	1	-	-	-	-	-	-	-	-	-		
6.	Go to Condition 5.	-	X	-	-	-	-	-	-	-	-		
7.	Go to Condition 6.	-	-	X	-	-	-	-	-	-	-		
8.	Go to Condition 7.	-	-	-	X	-	-	-	-	-	-		
9.	Suspect cards A02, B10 (Address Mark Enable).	-	-	-	-	1	-	-	-	-	-		
10.	Restore sw to ADDR MK position, repeat test and go to Condition 7.	-	-	-	-	-	X	-	-	-	-		
11.	Chk that FTU's Servo Offset sw is "off" (center position).	-	-	-	-	-	-	1	1	1	1		
12.	Replace card A01 (Write PLO).	-	-	-	-	-	-	2	-	-	-		
13.	Replace card B07 (NRZ → MFM).	-	-	-	-	-	-	3	-	-	-		
14.	Replace cards B02 (ch 1 rcurs) and B04 (ch 2 rcurs).	-	-	-	-	-	-	4	2	2	-		
15.	Replace card A10 (Write Protect).	-	-	-	-	-	-	5	-	3	2		
16.	Replace card B09 (On Cyl).	-	-	-	-	-	-	-	-	-	3		
17.	Replace Writer (A3A03).	2	-	-	-	2	-	6	-	4	4		
18.	Replace Hd Sel/Rd Amp (A3A02).	-	-	-	-	-	-	-	3	-	-		
19.	Call Field Support.	3	-	-	-	3	-	7	4	5	5		

KØR-0679-3

DLT 10 READ

Warning: None

Enters from: DLT 9

Procedures: Head Replacement, Alignment (section 2C)

References: Logic Diagrams

Exits to: DLT 11

Assumption: FTU connected to drive. FTU switches set per "Preliminary Set-up" in Operation section of TB304 manual. In addition, FTU Wrt-Rd Select switch set to RD.

CONDITIONS	1	2	3	4	5	6	7	8
1. Was address read properly? (1)	Y	Y	Y	N	N			
2. Was data read properly? (1)	Y	Y	N	-	-			
3. Are errors head-related?	-	N	Y	N	Y			
ACTIONS								
1. No problem. Go to DLT 11.	X	-	-	-	-			
2. Check that Data switches on FTU are set to read the pattern previously written on the disk.	-	1	-	-	-			
3. Replace card A06 (Read PLO; MFM → NRZ).	-	2	-	2	-			
4. Replace card A05 (Data latch).	-	3	-	3	-			
5. Replace card A08 (Offset).	-	4	-	4	-			
6. Replace cards B02, B04 (Ch 1, Ch 2 rcurs).	-	5	-	5	-			
7. Replace cards B01, B03 (Ch 1, Ch 2 xmtrs).	-	6	1	6	1			
8. Check head alignment (see Procedures, above).	-	7	2	7	2			
9. Replace Hd Sel/Rd Amp (A3A02).	-	8	-	8	-			
10. Replace faulty head(s). See Procedures, above.	-	-	3	-	3			
11. Reformat disk per WRT FORMAT procedure in TB304 manual.	-	-	-	1	-			
12. Call Field Support.	-	9	4	9	4			

(1) A NO answer here implies that the procedures given in the TB304 manual's Trouble Analysis DLT have already been tried in an attempt to recover the address or data, but to no avail.

KØR-0679-2

DLT 11 POWER DOWN

Warning: None

Enters from: DLT 10 or as desired

Procedures: None

References: Logic Diagrams

Exits to: None (Diagnostics terminate with this DLT)

Assumption: Remote operation — Attempt to power down the drive from FTU panel
Local operation — Press START sw on SMD panel to extinguish START light and power down the drive.

	CONDITIONS	1	2	3	4	5	6	7	8
1.	START light goes out? (LOCAL mode only.)	Y	Y	Y	Y	N			
2.	Heads unload?	Y	Y	Y	N	-			
3.	Drive motor brakes to a stop?	Y	N	N	-	-			
4.	Drive motor coasts to a stop?	N	N	Y	-	-			
	ACTIONS								
1.	Diagnostics have been completed satisfactorily.	X	-	-	-	-			
2.	Check deck interlock sw (A1A4), or wiring, for grounds.	-	1	-	-	-			
3.	Check that Heads Loaded sw (A3S2) has transferred. A10-30B should be at ground.	-	2	-	-	-			
4.	Check hysteresis brake and intervening connectors (JA80,J303). If OK, go to next recommended Action.	-	-	1	-	-			
5.	Replace card A10 (Start, Braking Control).	-	3	2	-	-			
6.	Replace card B09 (RTZ Latch).	-	-	-	1	-			
7.	Replace card A07 (Summing Amp).	-	-	-	2	-			
8.	Replace card A09 (Pwr Amp Control).	-	-	-	3	-			
9.	Cathode of START indicator (LED) grounded. Check card A10 diagrams for how.	-	-	-	-	1			
10.	Call Field Support.	-	4	3	4	2			

KØR-0679-2

PROCEDURES

PROCEDURE A: CHECKING DC VOLTAGES

This procedure defines dc-voltage check-points on the drive for both load and no-load conditions. It is used in conjunction with DLT2 or whenever a dc voltage is suspect.

The voltage readings in table A-2 may be obtained by using either a standard (needletype) or digital volt-ohmmeter. Table A-3 gives the usual symptoms for a malfunctioning power supply. Because spare parts for the components in the various supplies are not usually provided, a power supply is not normally repaired in the field, but simply replaced by substituting either a new power supply board or an entire power supply assembly.

TABLE A-2. CHECKING DC VOLTAGES

Voltage to be Checked	Volt-Ohmmeter Connections				
	Normal Load (A1P/J2 Mated)		No Load (A1P/J2 Separated)		Voltage Readings
	+Probe	-Probe	+Probe	-Probe	
+5	+5 Faston	Either of the GND Fastons on logic chassis or the ground-plane foil of the _XKV brd (see figure A-1).	J2-03		+5.1 (±0.05)
-5	-5 Faston		J2-05	J2-01 or J2-02 or J2-12 or J2-09	-5.1 (±0.05)
+12	U9-2 * **		J2-10		+12 (±2)
-12	U8-2 * **		J2-08		-12 (±2)
+20	+20 Faston		J2-06		+20 (±2)
-20	-20 Faston		J2-04		-20 (±2)
+42	A1F3		J2-13		+42 (±2)
-42	A1F4		J2-09		-42 (±2)

* U8, U9 Pin Arrangement

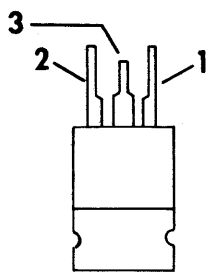

** If ±12 voltages remain in the range 7-9 V (±) or fluctuate between ±12 V and 0 V, suspect a fault in the dc loads. Verify with no-load readings. Heavy overloads such as a dead short will cause the regulator's thermal protect feature to drop the output voltage to zero.

TABLE A-3. FAILURE SYMPTOMS IN POWER SUPPLIES

Symptom	Probable Cause
1. Noticable ripple at output (checked with oscilloscope)	Open diode or open filter capacitor
2. Less than specified output (ac input ok)	Shorted diode or shorted filter capacitor
3. Output decreases signifi-icantly when load is con-nected.	Open bleeder resistor

Procedure:

1. Turn off POWER SUPPLY breaker (CB2).

2. Raise logic chassis to maintenance position to give access to voltage Fastons.

3. Be sure that P/J2 is mated to provide loads for the supplies to be checked.

4. Turn on CB2.

5. Using the VOM probe connections from the NORMAL LOAD columns of table A-2, check each supply voltage.

6. If any voltage is outside the tolerance given in table A-2, or is nonexistent, proceed to check the no load voltages by separating P/J2 and using the probe connections specified in the NO LOAD columns of the table. (Turn off CB2 before separating P/J2).

7. If the ±5 V readings are outside the tolerances of table A-2, adjust those voltages as described under the Plus and Minus 5 Volt Adjustment procedure in section 2C.

8. If further maintenance is not to be performed at this time:

   a. turn off CB2

   b. reconnect P/J2

   c. return the logic chassis to its normal position and secure the 1/4-turn fastener.

   d. turn on CB2 to restore normal drive functions.

PROCEDURE B: CHECKING AC INPUTS TO POWER SUPPLY BOARDS

This procedure verifies that a given secondary winding of ferroresonant transformer T1 has sufficient voltage to drive its associated power supply. The procedure should be performed whenever T1 is suspected as the cause for a lower-than-normal dc voltage, as measured using Procedure A. Steps 6 through 16 should also be performed whenever either the power supply assembly or the _XKV power supply board has been replaced, to assure that the previously malfunctioning supply did not damage the transformer.

NOTE

> The ±5, ±20, and ±42 V supplies constitute the load for T1 and its tuning capacitor, A1C8. Without a load, T1 would oscillate and produce meaningless voltage readings. For this reason, do not separate P/J1 in an attempt to measure the ac input voltages directly at the pin-sockets of P1.

The first five steps in the procedure, along with the resistance readings in table A-4, assure that the _XKV board itself is not shorted. This ensures that the subsequent ac input readings will be valid indication of the transformer's performance. Table A-5 shows the oscilloscope connections for monitoring the ac input to each supply. Figure A-1 gives the location of those monitoring points on the _XKV board. Figure A-2 shows the square-wave input (secondary-winding output) and the nominal ac voltages, the latter given more precisely in table A-5.

PROCEDURE:

Steps 1 through 5 ensure that there are no shorts in the power supplies on the _XKV board that might give the erroneous impression that T1 was at fault rather than the board itself.

1. Turn off CB2 (Power Supply breaker)

2. Remove the plastic cover protecting the _XKV board.

3. Isolate the _XKV board by separating connectors P/J1 (to T1) and P/J2 (to dc loads).

4. Referring to table A-4, check the input resistance of each supply. Allow time for the input capacitor to charge before determining the final reading.

5. If any of the four readings are significantly lower than those given in table A-4, the _XKV board should be replaced.

Steps 6 through 16 check the ac input to the _XKV board.

6. Reconnect P/J1.

7. Plug in the test scope and set the trigger control to LINE. Turn on the scope and when the horizontal trace becomes visible, center it on the graticule.

8. Connect the scope's ground probe to the ground-plane foil of the _XKV board (refer to figure A-1).

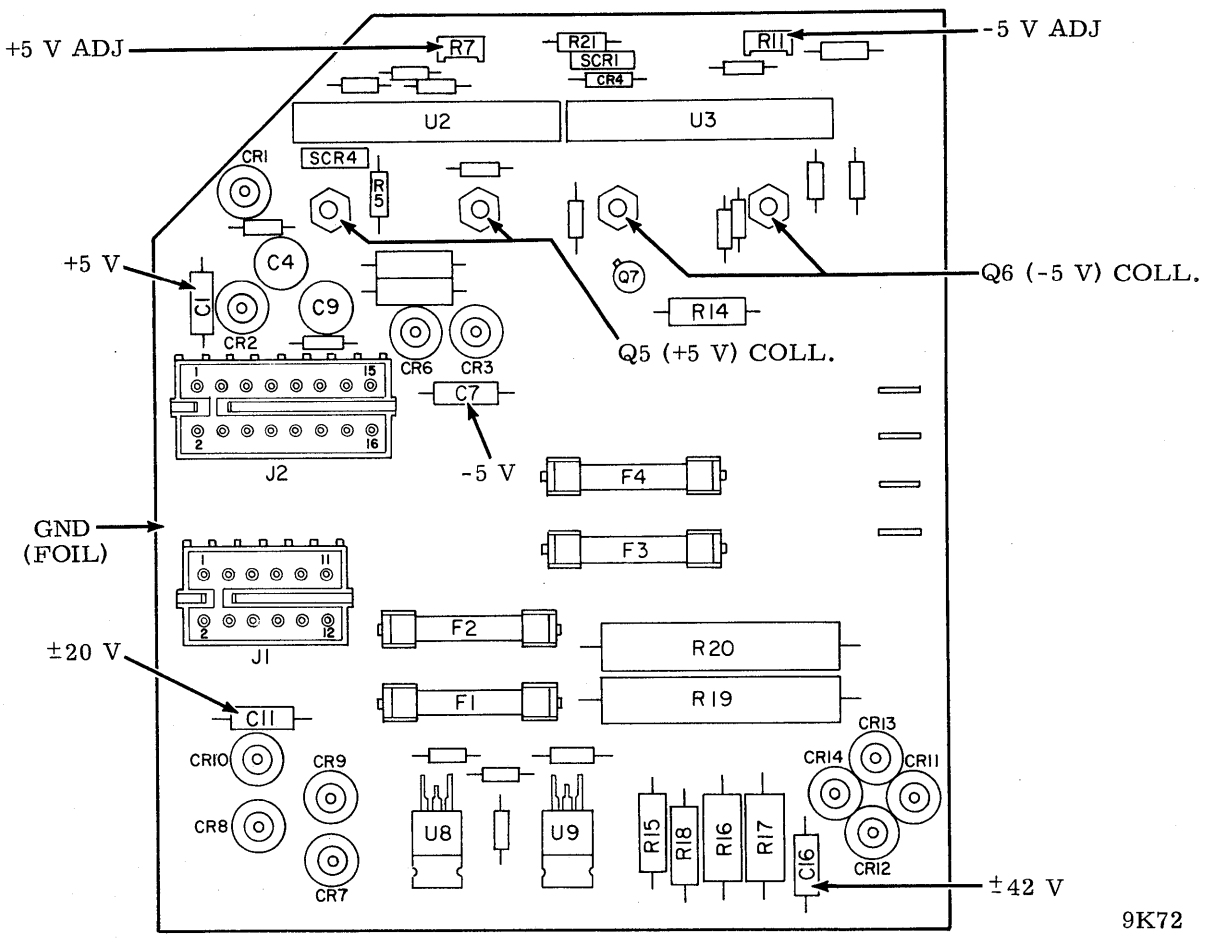

Figure A-1. AC-Input Probe Points on _XKV Board

TABLE A-4. CHECKING FOR SHORTED _XKV BOARD

Power Supply	VOM Connections to J1	Resistance (VOM Scale: Rx100)
+5 V	1,3	Inf.
-5 V	5,7	Inf.
±20 V	6,8	4300Ω
±42 V	2,4	4300Ω

9. Turn on CB2.

10. Connect the scope's + probe (i.e., CH1 or CH2, depending upon scope set-up) to either lead of the input filter capacitor listed in table A-5 for the voltage to be checked. (Refer to figure A-1 for capacitor locations.)

11. Adjust scope's TIME/DIV control to secure a stable square-wave trace (ref: figure A-2).

12. Adjust scope's VOLTS/DIV control to allow easy mental reckoning of the voltage represented by the trace, as shown against the graticule lines.

13. Record the voltage (or make a mental note, if you trust your visual memory) from the ground reference line on the graticule to the top and bottom plateaus of the trace, as indicated by "E" in figure A-2 (two readings).

14. Repeat step 13 with the + probe connected to the other lead of the input capacitor.

15. If both steps 13 and 14 show a symmetrical waveshape about the ground reference line (that is, all four voltage readings are the same), and are within the tolerance specified in table A-5, the T1 winding for that particular supply is ok.

TABLE A-5. CHECKING AC INPUTS TO _XKV BOARD

Supply to be Checked for AC Input	Scope Connections (Refer to Figure A-1)		AC Input Voltages (Check each Side of Input Capacitor)
	+Probe	-Probe	
+5 V	(AC Input) C1	(Ground) Ground-plane foil of _XKV board (see fig. A-1)	11 v ±1 V
-5 V	C7		11 V ±1 V
±20 V	C11		22 V ±1 V
±42 V	C16		44 V ±2 V

NOTE

If you suspect a disparity between the sets of readings taken in steps 10 and 11, check the probe points again with a VOM, which will make any difference more distinguishable. Keep in mind that the VOM readings will be less because they are effective, not peak, voltages.

16. If the voltage readings are not the same, or if they are the same bot not within the tolerance given in table A-5, the problem has to be a shorted winding in T1. You may be able to confirm this by sniffing the transformer for evidence of burned insulation, although this is not a definite test. Proceed to step 17.

WARNING

Tuning capacitor A1C8 is charged to 440 volts. Be sure to discharge it before starting step 17.

17. Replace transformer T1, using the procedure given in section 2D.

18. Check the newly installed transformer by repeating steps 6 through 14.

Figure A-2. T1 Inputs to Power Supply (_XKV Board)

OSCILLOSCOPE SETTINGS

SCOPE GND TO LOGIC GND

VOLTS/DIV
- CH 1 - 1 ①
- CH 2 - NA

TIME/DIV
- A - VARY FOR CONVENIENT TRACE
- B - NA

TRIGGERING
- A (USE X1 PROBE) - LINE
- B (USE X PROBE) - NA

PROBE CONNECTIONS
- CH 1 (USE X1 PROBE) - 1 ②
- CH 2 (USE X PROBE) - NA

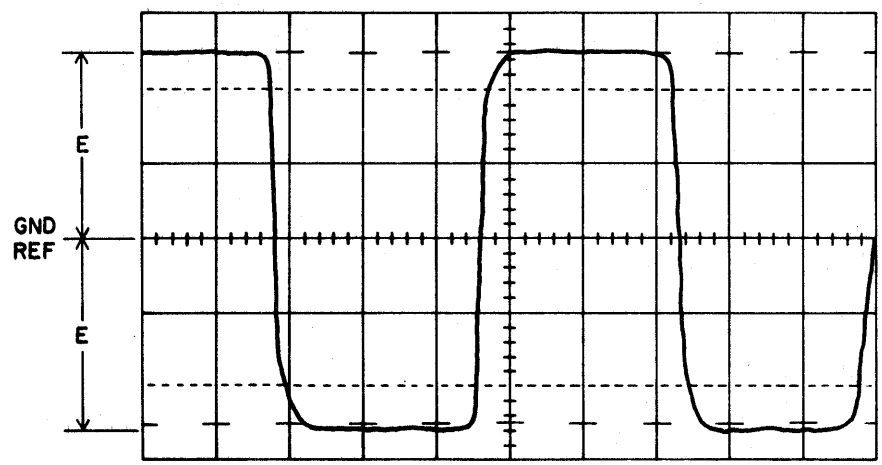

① ±5 V: E = 11 V
±20 V: E = 22 V
±42 V: E = 44 V

② SEE TABLE

9K68

PROCEDURE C: TROUBLESHOOTING HEAT-GENERATED PROBLEMS

CAUTION

> If the heads perform an unscheduled retract and the START and FAULT lights are both off, immediately turn off the POWER SUPPLY breaker; you have dropped +5 V and run the risk of burning up the voice coil. Only after you've shut off dc power should you check to see if the power-down resulted from a failure on the ac line. (Hint: check to see if the blower is still on).

If you commit the above CAUTION to memory and act instinctively upon it, you may one day save yourself a lot of trouble; failure of the +5 V supply is a common cause for abnormal shut-downs.

Heat-related problems are easy to diagnose: they occur only when the drive gets hot, and they disappear when the drive has had a chance to cool off. If you suspect a problem is heat-related, let the drive cool down, then note the failure (or more accurately, the absence of the failure) when the drive is started up again. Often the troubleshooting period can be shortened by applying artificial heat to the suspected area (a hair dryer is useful here). Once you've diagnosed the problem, correct is as you would any other malfunction.

Heat problems are of two types -- those originating in the power supplies and those developing in the various loads. Should a load fault take out a 20 V or 42 V fuse, the course is clear: simply refer to the appalicable "load" DLT. If the load does not pop a fuse but merely brings up a FAULT light (on the back of the operator panel), the table below should offer a starting point for correcting the problem. (If the +5 V supply goes, of course, the fault lights won't work.)

FAULT	PROBLEM RELATED TO
Voltage (except +5 V)	A03, A04, A09
On Cyl·(W+R)	A03, B02, B09
Write	A03, A04, B01, A3A03 Write Driver board)
W·R	A04, B02
Hd Sel	A02, A04, A3A02 (Hd Sel/Rd Amp board)

Losing ±5 V can be bothersome because those supplies maintain a uniform output voltage right up to their current limit, and then drop to 0 V when that limit is exceeded. Should this happen, check to see if the supply itself is the culprit by disconnecting the 5 V load. If the voltage returns to 5 V, the fault lies in the load, not the supply.

PROCEDURE D: PIN-POINTING VOLTAGE FAULTS IN THE LOGIC CHASSIS

This procedure locates ±5 V, ±20 V, and ±42 V faults on cards in the logic chassis or in the logic chassis backpanel wiring. (There is no ±12 V load in logic chassis assembly A2.)

The test procedure may be conducted in either of two ways. The first method is to check the ±5 V, ±20 V, and ±42 V loads individually by entering Procedure D from the applicable DLT:

±5 V -- Condition 1 of DLT 3

±20 V -- Condition 1 of DLT 4

±42 V -- Condition 3 of DLT 6

The second method is to check all three loads at the same time. The test for load faults in each voltage is made by adding cards to the logic chassis one at a time, so it is more efficient to check all three loads on a given care at one time. (Of course, some cards will not require all three checks.)

The second method is the one described below, and requires that the tests for Conditions 1 and 2 of DLT 6 have been satisfactorily completed before entering the procedure.

NOTE

It should be pointed out that, as shown in table A-1, only +5 V is used on every card. If there is no +5 V fault in the logic chassis, only the cards using the faulted voltage(s) need to be removed.

1. Be certain that Conditions 1 and 2 of DLT 6 have been tested with satisfactory results before proceeding to step 2. (Condition 1 checks the servo capacitors, Condition 2 the power amplifier.)

2. Turn off the POWER SUPPLY (PS) breaker.

3. Separate PA80 and PA81 from their jacks on the logic chassis.

4. Ensure that all other connectors are properly mated.

5. Remove all cards from the logic chassis. (See NOTE, above, for possible exception to this "all cards: rule.)

6. Turn on the PS breaker.

7. Load faults caused by wiring errors in (or damage to) the logic chassis backpanel will show up as a blown fuse. Check the integrity of each fuse as described in DLT 2. If a fuse blows, carefully raise the logic chassis to the maintenance position and check backpanel for grounds caused by bent pins or dangling wires. After clearing the fault, restore the logic chassis to its normal position.

8. Turn off the PS breaker. You are now ready to start putting the cards back in the logic chassis one at a time, checking for faults after each one has been inserted.

9. Before inserting a card, examine both sides for evidence of arcing across the foil. Often the carbon residue around an arc area can be removed with an alcohol swab and the card won't give any more trouble.

10. Insert the selected card properly.

11. Turn on the PS breaker.

12. Using table A-1 to determine which voltages are present on the card, check the integrity of the applicable fuses.

13. If step 12 shows a blown fuse, turn off the PS breaker, replace the card just installed with a fresh one from the spare parts bin and try the test again.

14. If step 12 shows that the fuses are OK, turn off the PS breaker and, selecting another card, repeat steps 9 through 14.

15. When all cards have been checked good, return to the applicable "load fault" DLT to continue the dc-load checkout on the additional assemblies.

APPENDIX B

DECISION LOGIC TABLES

(DLTs)

for SMDs with 3 Card Power Supplies

CONTENTS

FIGURES

TABLES

DECISION LOGIC TABLES (DLTs)

INTRODUCTION

Decision logic tables help maintenance technicians organize their thinking when problems occur in the drive. For a given fault condition (or set of conditions), actions are recommended to locate and correct the fault. The actions are arranged so that the corrective measures that are easiest to perform (checking a fuse or changing a card in the logic chassis, for example) are listed before the more difficult tasks such as replacing the head/arm assembly or drive motor.

A Useful Troubleshooting Aids section contains two general-interest maintenance procedures, as well as a voltages-used table that should prove helpful throughout the troubleshooting effort.

The DLTs consist of 11 tables, described briefly below.

- DLT 1 shows how to correct problems that occur when attempting to "power-up" the drive, including the failure of any of the three dc power supplies.
- DLT 2 helps to define the origin of ±5 V load fault -- either in the loads or in the supply itself.
- DLT 3 shows how to isolate a ±5 V load fault to a given area or electrical component.
- DLTs 4, 5, and 6 show how to locate and correct faults in the ±20 V loads, ±12 V loads, and ±42 V loads.
- DLTs (7 through 10 are used with the FTU (TB303) to correct various seek and read/write errors).
- DLT 11 shows what to do when a drive does not "powerdown" properly.

The procedures referred to in the DLTs form the last portion of this discussion.

USING THE DLT

The DLT is divided into four quadrants. The upper-left quadrant, CONDITIONS, contains the various test conditions that can be answered "yes" or "no". The CONDITIONS quadrant is prefaced by any ASSUMPTIONS (that is, pre-conditions) that must be observed if the test results are to be valid. Sometimes, prerequisite actions other than the ASSUMPTIONS must be taken before the test for a given condition is made. Such steps are included in the CONDITIONS quadrant. The yes (Y) or no (N) answers to each condition are shown in numbered columns in the topright Situations quadrant.

To use the DLT, first determine whether the result of a condition tested is Y or N. If two or more conditions exist simultaneously, look for a situations column that combines the appropriate Y-N answers for those conditions. A dash (-) in the top-right Situations quadrant means that the related Condition is not a factor in determining what actions are to be taken for that situation.

Next, determine what action should be taken for a given test result (i.e., situation) by following down the selected column to the row marked "1" in the lower-right Sequence quadrant. (If there is only one recommended action for a given situation, an "X" appears instead of the "1".) The recommended action is then located by moving across to the lower-left ACTIONS quadrant. A dash in a column of the Sequence quadrant indicates that the related Action isn't applicable.

After taking the first recommended action, repeat the test that gave rise to the situation. If the test results haven't changed (same situation), try recommended action 2, and so on, being sure to repeat the test after each such action.

Column 1 is generally reserved for an "everything OK" situation. If a DLT requires more than one sheet, this "no problem" column is repeated on each sheet. Similarly, the last ACTION on each sheet is a recommendation to "call field support". Don't brood over your inadequacy if you reach this last entry; not every situation can be covered in a DLT.

USEFUL TROUBLESHOOTING AIDS

USING A VOM TO CHECK A CAPACITOR

1. Remove power from the equipment.

2. Discharge capacitor by momentarily shorting the leads with a jumper wire. (Use screwdriver for large capacitors.)

3. Isolate the capacitor by disconnecting one lead from the circuit.

4. Set VOM to X1000 (ohms) scale.

5. Connect the VOM across the capacitor leads. The condition of the capacitor is interpreted as follows:

Meter reading	Interpretation
Needle goes rapidly to full scale (0Ω), then regresses to infinity (oo). (See NOTE.)	Capacitor OK
Needle goes rapidly to full scale and remains there.	Capacitor shorted
Needle deflects slightly or not at all.	Capacitor open

NOTE

Speed with which needle returns to infinity (oo) is a function of capacity rating. Return swing is rapid for small capacitors, becoming slower as capacity increases. To a lesser degree, return swing is also dependent upon which meter scale is used.

IN-CIRCUIT DIODE CHECKING WITH A VOM

A diode that is suspect can be given a preliminary check without disconnecting it from the circuit. Merely check the diode twice, reversing the meter leads between the two readings. Of course, power should be off, and for your own peace of mind any capacitors in the circuit should be discharged.

Keep in mind that the forward drop across a good diode is in the range 5 - 15 Ω; the reverse drop is on the order of 1 M Ω. Parallel resistances in the circuit will, of course, significantly reduce the higher of these two readings, but if one is low and the other high, chances are the diode is OK. If both are low, the diode is probably shorted; if both are high, it's probably open.

This check can also be used for a bridge rectifier. You'll probably want to check at least two diodes in the bridge, because back-circuits may give different readings across different diodes.

TABLE B-1. VOLTAGES USED BY ELECTRONIC COMPONENTS

	A1 - Power Supply								A3 - Deck				
Voltages	Servo Cap Board C1	C2	Run Triac K1	Em. Retr. Relay K2	Contr Pnl A01	Hd Rd A02	Sel Amp	Writer A03	Pwr Amp A04	Servo Pre-Amp A05	Start Triac K5	Hyst Brake HB1	Pack Cover Sol L3	VC1
+5 V			x		x		x	x			x			
-5 V							x	x						
+12 V							x			x				
-12 V							x			x				
+20 V				x			x					x		x
-20 V														
+42 V	x							x	x				x	
-42 V		x							x				x	

TABLE B-1. VOLTAGES USED BY ELECTRONIC COMPONENTS (Contd)

A2 - Logic Chassis

Voltages	A01	A02	A03	A04	A05	A06	A07	A08	A09	A10	B01	B02	B05	B06	B07	B08	B09	B10
+5 V	x	x	x	x	x	x	x	x	x	x	x	x	x	x	x	x	x	x
-5 V	x	x	x	x	x	x		x	x	x	x	x	x	x	x			
+12 V																		
-12 V																		
+20 V	x	x	x	x	x	x	x	x	x	x								
-20 V	x	x	x	x	x	x	x	x	x									
+42 V				x					x	x								
-42 V				x					x									

DECISION LOGIC TABLES

DLT 1 POWER UP (sheet 1 of 3)

Warning: Tuning capacitor A1C8 is charged to 440 volts!

Enters from: Assumptions

Procedures: See sheet 2

References: Logic Diagrams

Exits to: Sheet 2

Assumption:
1. Drive connected to ac power
2. Disk pack installed
3. Attempt to power up and start drive from SMD panel.

	CONDITIONS	1	2	3	4	5	6	7	8
1.	AC POWER (AC) breaker trips when actuated?	N	Y	N	N	N	N	N	-
2.	Blower motor starts when AC breaker is actuated?	Y	-	N	N	Y	-	-	-
3.	Door fans start when AC breaker is actuated?	Y	-	N	Y	N	-	-	-
4.	POWER SUPPLY (PS) breaker trips when actuated?	N	-	-	-	-	Y	-	-
5.	AC or drive motor thermal brkr trips when PS brkr is actuated?	N	-	-	-	-	-	Y	-
6.	The smell of burning insulation detected after actuating PS brkr?	N	-	-	-	-	-	-	Y
	ACTIONS								
1.	Continue with Condition 7 on sheet 2.	X	-	-	-	-	-	-	-
2.	If pwr plug customer-provided, chk phase and grd connections.	-	1	1	-	-	-	-	-
3.	Suspect blower--separate J/P301; if trouble persists, blower is OK.	-	2	-	-	-	-	-	-
4.	Suspect time meter--disconnect, then try again to verify.	-	3	-	-	-	-	-	-
5.	Suspect door fans--separate J/P400, then try again to verify.	-	4	-	-	-	-	-	-
6.	Check for ac in and out of line filter A1FL1.	-	-	2	-	-	-	-	-
7.	Suspect open blower cap A1C5, or open in blower motor or cable.	-	-	-	1	-	-	-	-
8.	Check AC breaker for continuity.	-	5	3	-	-	-	-	-
9.	Check continuity of door fans and cabling.	-	-	-	-	1	-	-	-
10.	Suspect shorted tuning capacitor A1C8--see WARNING, above.	-	-	-	-	-	1	-	-
11.	Trouble may be a shorted p.s. board, a short in T1 wiring, or a short in T1 itself. To check further, go to sheet 2 voltage checks.	-	-	-	-	-	2	-	-
12.	Suspect Run triac energized before START sw has been pressed. Troubleshoot logic, starting with logic card at location A10.	-	-	-	-	-	-	1	-
13.	Chk Run triac for shorted LOAD contacts (Terminals 1,2).	-	-	-	-	-	-	2	-
14.	You have lost +5 V power. IMMEDIATELY TURN OFF THE POWER SUPPLY BREAKER TO PREVENT BURNING UP THE VOICE COIL. To check on voltage loss, go to sheet 2.	-	-	-	-	-	-	-	X
15.	Call Field Support.	-	6	4	2	2	3	3	-

KØR-0679-2

DLT 1 POWER UP (sheet 2 of 3)

Warning: Tuning capacitor A1C8 is charged to 440 volts!

Enters from: Sheet 1

Procedures: A, B

References: Logic Diagrams

Exits to: Sheet 3 and DLTs 4,5,6

Assumption: Use Procedure A to check dc voltages in Conditions shown.

CONDITIONS	1	9	10	11	12	13	14	15	16	17	18
7. ±5 voltages OK?	Y	N	N	N	-	-	-	-	-	-	-
8. ±12, ±20, ±42 voltages significantly low?	N	Y	N	N	-	-	-	-	-	-	-
9. Are either of the 9.2 V fuses on ±5 V p.s. board blown? (1)	-	-	Y	N	-	-	-	-	-	-	-
10. ±20 voltages OK?	Y	-	-	-	N	N	Y	Y	Y	-	-
11. Are either of the 20 V fuses on the ±20 V p.s. board blown? (1)	-	-	-	-	Y	N	-	N	N	-	-
12. ±12 voltages OK with load connected?	Y	-	-	-	-	-	N	N	N	-	-
13. ±12 voltages OK with load disconnected per Action 22?	-	-	-	-	-	-	-	Y	N	-	-
14. ±42 voltages OK?	Y	-	-	-	-	-	-	-	-	N	N
15. Are either of the 42 V fuses on the ±42 V p.s. board blown? (1)	-	-	-	-	-	-	-	-	-	Y	N
ACTIONS											
16. Continue with Condition 16 on sheet 3.	X	-	-	-	-	-	-	-	-	-	-
17. Suspect open tuning capacitor--see WARNING, above.	-	1	-	-	-	-	-	-	-	-	-
18. Trouble may be either on the ±5 V p.s. board or in the ±5 V loads. To see which, go to DLT 2.	-	-	X	-	-	-	-	-	-	-	-
19. Faulty supply or T1 winding. To see which, go to Procedure B.	-	-	-	1	-	1	-	-	-	-	1
20. Trouble is in the ±20 V loads. Go to DLT 4.	-	-	-	-	X	-	-	-	-	-	-
21. Replace ±20 V p.s. board.	-	-	-	-	-	-	-	-	1	-	-
22. Isolate load by separating P/J1A and P/J1B, then go to Condition 13.	-	-	-	-	-	-	X	-	-	-	-
23. Trouble is in the ±12 V loads. Go to DLT 5.	-	-	-	-	-	-	-	X	-	-	-
24. Trouble is in the ±42 V loads. Go to DLT 6.	-	-	-	-	-	-	-	-	-	X	-
25. Call Field Support.	-	2	-	2	-	2	-	-	2	-	2

(1) Check with VOM between ground and each side of fuse. If supply voltage appears on only one side, fuse is bad.

KØR-0679-3

DLT 1 POWER UP (sheet 3 of 3)

Warning: None
Enters from: Sheet 2
Procedures: A, C
References: Logic Diagrams
Exits to: DLT 7

Assumption:

	CONDITIONS	1	19	20	21	22	23	24	25
16.	AC brkr or motor thermal brkr trips when START sw is pressed?	N	Y	N	N	N	N	N	N
17.	START light comes on when START switch is pressed?	Y	-	N	N	Y	Y	Y	Y
18.	Drive motor starts when START switch is pressed?	Y	-	Y	N	N	Y	Y	Y
19.	Drive motor comes up to speed?	Y	-	-	-	-	N	Y	Y
20.	Heads load? (READY light comes on.)	Y	-	-	-	-	-	N	Y
21.	Drive motor cuts out after 15-second timeout expires?	N	-	-	-	-	Y	-	-
22.	PS brkr trips after drive has been operating satisfactorily?	N	-	-	-	-	-	-	Y
	ACTIONS								
26.	Power up completed satisfactorily. Go to DLT 7.	X	-	-	-	-	-	-	-
27.	Suspect Run logic--start with card A10.	-	-	-	-	3	-	-	-
28.	Suspect Run triac.	-	-	-	-	4	1	-	-
29.	Suspect Start triac.	-	1	-	-	-	-	-	-
30.	Suspect drive motor Start capacitor (A3C6).	-	2	-	-	5	-	-	-
31.	Suspect open Start winding on drive motor.	-	3	-	-	8	-	-	-
32.	Suspect START switch/indicator.	-	-	1	-	-	-	-	-
33.	Check all interlocks.	-	-	-	1	-	-	-	-
34.	Check for presence of +5 V (using Procedure A).	-	-	-	2	-	-	-	-
35.	Chk that Local/Remote sw (card A10) is in LOCAL position.	-	-	-	-	1	-	-	-
36.	Suspect tripped drive motor thermal brkr--reset and check cause.	-	-	-	-	2	-	-	-
37.	Check hysteresis brake for mechanical binding.	-	-	-	-	6	2	-	-
38.	Suspect brake logic continuously energized--start with card A10.	-	-	-	-	7	3	-	-
39.	Suspect speed sensor and/or attendant logic--card A10.	-	-	-	-	-	4	-	-
40.	Suspect open Run winding on drive motor.	-	-	-	-	9	-	-	-
41.	Refer to DLT 7, First Seek.	-	-	-	-	-	-	X	-
42.	Suspect overloaded (overheated) supply. Go to Procedure C.	-	-	-	-	-	-	-	1
43.	Call Field Support.	-	4	2	3	10	5	-	2

KØR-0679-2

DLT 2 ISOLATING PROBLEMS IN THE ±5 V NETWORK

Warning: None

Enters from: DLT 1

Procedures: None

References: None

Exits to: DLT 3

Assumption: No ±5 V, other voltages are present. Fuse(s) on ±5 V p.s. board blown, indicating a problem either in the loads or in the supply itself.

CONDITIONS	1	2	3	4	5	6	7	8
1. Check out unregulated portion of ±5 V p.s. board:								
a) Turn off AC breaker; reset PS breaker if tripped.								
b) Remove fuses F1 and F2.								
c) Disconnect loads by separating connectors P/J1B and P/J1A.								
d) Remove ±20 V p.s. board.								
e) Remove ±42 V p.s. board.								
f) Turn on AC breaker.								
Does PS breaker trip?	N	Y	-	-				
2. Check out regulated portion of ±5 V p.s. board:								
a) Turn off PS breaker.								
b) Replace F1 and F2.(Use good fuses!)								
c) Turn on PS breaker.								
Does either F1 or F2 blow?	-	-	N	Y				

ACTIONS								
1. Unregulated portion is OK. Go to Condition 2.	X	-	-	-				
2. Turn off PS breaker and replace ±5 V p.s. board, then reinstall ±42 V and ±20 V p.s. boards.	-	X	-	X				
3. ±5 V board is OK, so problem must be in the load. Turn off the PS breaker, rejoin connectors P/J1A and P/J1B, then go to DLT 3.	-	-	X	-				

KØR-0679-2

DLT 3 ISOLATING FAULTS IN THE ±5 V LOADS (Sheet 1 of 2)

Warning: None

Enters from: DLT 2

Procedures: D

References: None

Exits to:

Assumption: P1A and P1B (on power supply motherboard) have been reconnected so as to provide a load to the ±5 V supply.

CONDITIONS	1	2	3	4	5	6	7	8
1. Check out logic chassis (assembly A2):								
a) Turn off PS breaker								
b) Ensure that connectors P/J1A and P/J1B are properly mated								
c) Remove ±20 V and ±42 V p.s. boards from assembly A1								
d) Separate P/JA80 (+5 V to control panel)								
e) Separate P/JA81 (±5 V to Hd Sel/Rd Amp and Writer								
f) Turn on PS breaker								
Does either F1 or F2 blow? (Check for ±9 V at fuseholders.)	N	Y	-	-				
2. Add Control Panel (A3A01) to ±5 V load:								
a) Turn off PS breaker								
b) Reconnect P/JA80								
c) Turn on PS breaker								
Does +5 V fuse (F1) blow? (Check for +9 V at fuseholder)	-	-	N	Y				
ACTIONS								
1. ±5 V to logic chassis is OK. Go to Condition 2	X	-	-	-				
2. ± 5 V fault is in logic chassis. To rectify, go to Procedure D	-	X	-	-				
3. +5 V to control panel is OK. Go to Condition 3	-	-	X	-				
4. Replace control panel (A3A01)	-	-	-	X				

KØR-0679-2

DLT 3. ISOLATING FAULTS IN THE ±5 V LOADS (Sheet 2 of 2)

Warning: None

Enters from: DLT 2

Procedures: D

References: None

Exits to:

Assumption: P1A and P1B (on power supply motherboard) have been reconected so as to provide a load to the ±5 V supply.

CONDITIONS	5	6	7	8				
3. Add Hd Sel/Rd Amp (A3A02) and Writer (A3A03) to ±5 V load:								
a) Turn off PS breaker								
b) Reconnect P/JA81								
c) Turn on PS breaker								
Does F1 or F2 blow? (Check for ±9 V at fuseholder)	N	Y	-	-				
4. Isolate fault to A3A02 or A3 A03:								
a) Turn off PS breaker								
b) Separate piggy-back Writer card (A3A03) from A3A02								
c) Turn on PS breaker								
Does F1 or F2 blow? (Check for ±9 V at fuseholders.)	-	-	N	Y				
ACTIONS								
5. ±5 V distribution is OK. Fault may be a shorted Start or Run triac.	1	-	-	-				
To confirm, try bringing the drive motor up to speed.								
6. Fault is in A3 A02 or A3A03. To pin-point, go to Condition 4.	-	X	-	-				
7. Fault is in A3A03 (Writer). Replace	-	-	X	-				
8. Fault is in A3A02 (Hd Sel/Rd Amp). Replace	-	-	-	X				
9. Call Field Support	2	-	-	-				

KØR-0679-2

DLT 4 ISOLATING FAULTS IN THE ±20 V LOADS

Warning: None

Enters from: DLT 1

Procedures: D

References: DLT 5

Exits to:

Assumption: ±20 V power supply board installed in power supply assembly; ±5 V and ±42 V boards removed. P/J1A and P/J1B connected.

CONDITIONS	1	2	3	4	5	6	7	8
1. Restrict ±20 V load to logic chassis:								
a) Turn off PS breaker.								
b) Separate P/JA81 on logic chassis. (1)								
c) Turn on PS breaker.								
Does either 20 V fuse blow? (2)	N	Y	-	-				
2. Add A3A02 (Hd Sel/Rd Amp) to +20 V load:								
a) Turn off PS breaker.								
b) Reconnect P/JA81.								
c) Turn on PS breaker.								
Does +20 V fuse blow? (2)	-	-	N	Y				

ACTIONS								
1. ±20 V loads in logic chassis are OK. Go to Condition 2.	X	-	-	-				
2. Go to Procedure D to check logic chassis.	-	X	-	-				
3. ±20 V power distribution is OK. Chances are that the fault appears when the logic connects the emergency retract relay coil, the hysteresis brake, or the pack cover solenoid to +20 V. Most probable cause is a shorted or grounded coil in one of these components.	-	-	1	-				
4. Replace A3A02.	-	-	-	1				
5. Call Field Support.	-	-	2	2				

(1) This arrangement retains the ±12 V power (unfused) to the servo preamp, assembly A3A05. The alternative is to disconnect P8, which is hardly worth the effort since properly reconnecting it to A3A05 is rather difficult. In any event, current-limiting resistors in the 12 V circuits prevent damage to the supply or components if the 12 V loads are faulty. See DLT 5 for checking the 12 V loads.

(2) Test fuses by using a VOM between ground and each side of the fuseholder. If there is no voltage on the load side of the fuse, the fuse has blown.

KØR-0679-2

DLT 5 ISOLATING FAULTS IN THE ±12 V LOADS

Warning: None

Enters from: DLT 1 or DLT 4

Procedures: None

References: Procedure A

Exits to:

Assumption: ±20 V (±12 V) board and ±5 V board installed in power supply assembly; ±42 V board removed. P/J1A and P/J1B connected.

CONDITIONS	1	2	3	4	5	6	7	8
1. Isolate ±12 V load to A3A05 (servo preamp):								
a) Turn off PS breaker.								
b) Separate P/JA81 from logic chassis.								
c) Turn on PS breaker.								
d) Using VOM, check between +12 V Zener diode VR1 (red wire) on								
±20 V p.s. board and ground, and between -12 V diode VR2 (blue								
wire) and ground. Do the voltages differ from one another by								
more than 0.3 volts?	N	Y	-	-				
2. Add A3A02 (Hd Sel/Rd Amp) to ±12 V load:								
a) Turn off PS breaker.								
b) Reconnect P/JA81.								
c) Turn on PS breaker.								
d) Check voltages at VR1 and VR2 as in Condition 1d).								
Are voltages within the tolerance given in Procedure A?	-	-	Y	N				

ACTIONS								
1. Servo preamp is OK. Go to Condition 2.	X	-	-	-				
2. A voltage difference here could cause unequal amplification of the	-	1	-	-				
servo dibits, resulting in an On Cylinder null signal that is not								
centered over the servo track. This "permanent offset" may give								
sporadic Read errors, or even cause reading of the wrong data track.								
The voltage disparity could be caused by a Zener that doesn't work								
properly under load, or by a faulty servo preamp. Replace the ±20 V								
p.s. board first, and if that doesn't help, go to Action 4.								
3. If you're reading this, you must have come down the wrong column. At	-	-	X	-				
any rate, you no longer have a ±12 V load fault!								
4. Replace servo preamp (A3A05).	-	2	-	-				
5. Replace Hd Sel/Rd Amp (A3A02).	-	-	-	1				
6. Call Field Support.	-	3	-	2				

KØR-0679-2

DLT 6 ISOLATING FAULTS IN THE ±2 V LOADS (Sheet 1 of 2)

Warning: None

Enters from: DLT 1

Procedures: D

References: None

Exits to:

Assumption: ±5V, ±12 V, ±20 V distribution has been checked out and found OK. The ±42 V power supply board has been installed in the power supply assembly. P/J1A and P/J1B connected.

CONDITIONS	1	2	3	4	5	6	7	8
1. Restrict ±42 V load to the two capacitors:								
a) Turn off PS breaker								
b) Separate P/J200 (on Pwr Amp ass'y)								
c) Turn on PS breaker								
Does either fuse blow? (1)	N	Y	-	-				
2. Add power amp (A3A04) to the ±42 V load:								
a) Turn off PC breaker								
b) Remove PA09 from location A09 of the logic chassis backpanel								
c) Reconnect P/J200 (on power amp)								
d) Turn on PS breaker								
Does either fuse blow? (1)	-	-	N	Y				

ACTIONS	1	2	3	4	5	6	7	8
1. Servo caps are OK. Go to Condition 2	X	-	-	-				
2. Servo cap shorted. A1C1 is +42, A1C2 is -42. Blown fuse tells which.	-	1	-	-				
3. Power amp is OK. Go to Condition 3	-	-	X	-				
4. Replace power amp (A3A04)	-	-	-	1				
5. Call Field Support	-	2	-	2				

(1) Test fuses with a VOM between ground and each side of the fuseholder. No voltage on the load side of the fuse means the fuse has been blown.

KØR-0679-2

DLT 6. ISOLATING FAULTS IN THE ±42 V LOADS (Sheet 2 of 2)

Warning: None

Enters from: DLT 1

Procedures: D

References: None

Exits to:

Assumption: ±5 V, ±12V, ±20 V distribution has been checked out and found OK. The ±42 V power supply board has been installed in the power supply assembly. P/J1A and P/J1B connected.

CONDITIONS	5	6	7	8				
3. Add logic chassis to the ±42 V load:								
a) Turn off PS breaker								
b) Reconnect PA09 to location A09 of logic chassis backpanel								
c) Separate P/JA81 (on logic chassis)								
d) Turn on PS breaker								
Does either fuse blow? (1)	N	Y	-	-				
4. Add writer (A3A03) to +42 V load:								
a) Turn on PS breaker								
b) Reconnect P/JA81 (on logic chassis)								
c) Turn on PS breaker								
Does +42 V fuse (F1) blow? (1)	-	-	N	Y				
ACTIONS								
6. ±42 V loads in logic chassis are OK. Go to Condition 4	X	-	-	-				
7. ±42 V load fault in logic chassis. Go to Procedure D	-	1	-	-				
8. You may have had a fault, but you don't have one now!	-	-	X	-				
9. Replace writer (A3A03)	-	-	-	1				
10. Call Field Support	-	2	-	2				

(1) Test fuses with a VOM between ground and each side of the fuseholder. No voltage on the load side of the fuse means the fuse has blown.

KØR-0679-2

DLT 7 FIRST SEEK (sheet 1 of 2)

Warning: None

Enters from: DLTs 1 through 6

Procedures: See sheet 2

References: Logic diagrams

Exits to: DLT 8 or sheet 2 of this DLT

Assumption: START light is on, drive is coming up to speed.

CONDITIONS	1	2	3	4	5	6	7	8
1. READY light comes on, signifying successful First Seek?	Y	N	N	N	N	N		
2. First Seek attempted?	-	N	N	N	N	N		
3. Check that Heads Loaded switch (A3S2) is transferring:								
a) Press START sw to stop disk. Do not turn off breakers.								
b) Manually push voice coil forward to move heads off unloading								
ramp. Does voice coil resist fwd movement?	-	-	N	Y	Y	Y		
4. Check for forward drive to voice coil:								
a) Disconnect black lead from voice coil (term. 2 in c.r. 282).								
b) Attach + probe of VOM to black wire, com. probe to logic gnd.								
c) Press START.								
d) Wait 15-20 sec for up-to-speed time out to expire, then chk VOM.								
Does VOM read approx +40 V?	-	-	-	-	N	Y		
ACTIONS								
1. No problem--go to DLT 8.	X	-	-	-	-	-		
2. Go to Condition 3.	-	X	-	-	-	-		
3. Suspect leads to (or contacts in) E.R. relay A1K2.	-	-	1	-	-	-		
4. Suspect open voice coil.	-	-	2	-	-	-		
5. Replace A3S2 (Hds Loaded sw).	-	-	3	-	-	-		
6. Replace power amp ass'y.	-	-	4	-	6	-		
7. A3S2 is OK. Go to Condition 4 to chk fwd drive on voice coil.	-	-	-	X	-	-		
8. Suspect card A09 (pwr amp control).	-	-	-	-	1	-		
9. Suspect card B09 (direction control).	-	-	-	-	2	-		
10. Suspect card A07 (summing amp).	-	-	-	-	3	-		
11. Suspect card B06 (diff cntr, CAR).	-	-	-	-	4	-		
12. Suspect card A10 (speed control).	-	-	-	-	5	-		
13. Voice coil should attempt First Seek upon expiration of up-to-speed	-	-	-	-	-	X		
timeout. Go to Condition 5 on sheet 2.								
14. Call Field Support.	-	-	5	-	7	-		

KØR-0679-2

DLT 7 FIRST SEEK (sheet 2 of 2)

Warning: None

Enters from: Sheet 1

Procedures: Head-Arm Replacement (section 2D); Hd-Arm Alignment (section 2C)

References: Logic Diagrams

Exits to: DLT 8

Assumption: START light is on; drive attempts First Seek.

	CONDITIONS	7	8	9	10	11	12	13
1.	READY light indicates successful First Seek? (From sheet 1.)	N	N	N	N	N	N	N
2.	First Seek attempted? (From sheet 1.)	Y	Y	Y	Y	Y	Y	Y
5.	Drive attempts First Seek, then unloads?	Y	Y	Y	Y	-	-	-
6.	Servo preamp input to card A03 OK?	-	N	Y	Y	-	-	-
7.	Track Servo signal present at A03-09B?	-	-	N	Y	-	-	-
8.	Drive seeks to forward mechanical stop, FAULT light comes on (+42 fuse blows) but heads don't unload--unit can't pwr down?	-	-	-	-	Y	-	-
9.	Drive seeks to fwd mech stop, waits for FAULT light (+42 fuse blows), then retracts?	-	-	-	-	-	Y	-
10.	Drive loads heads, hesitates, then creeps to fwd EOT?	-	-	-	-	-	-	Y
	ACTIONS							
15.	Not sensing dibits. Chk servo preamp input to card A03 pin 23B (+ dibits) and A03-25B (- dibits), then go to Condition 6.	X	-	-	-	-	-	-
16.	Chk for continuity/gnds in servo preamp cable (input to A03).	-	1	-	-	-	-	-
17.	Replace A3A05 (servo preamp).	-	2	-	-	-	-	-
18.	Replace and align servo head (see Procedures, above).	-	3	-	-	-	-	-
19.	Suspect card A03.	-	-	1	-	-	-	-
20.	Suspect propagation of Track Servo signal logic through cards A08, A07, A09, B09.	-	-	-	1	-	-	-
21.	Replace power amp A3A04.	-	-	-	-	3	2	-
22.	Suspect velocity transducer and attendant logic on cards A08, A09, B09.	-	-	-	-	2	-	-
23.	Check Fine Enable logic (cards A08, B09).	-	-	-	-	1	-	1
24.	Suspect cards A03, A07, A09.	-	-	-	-	-	1	2
25.	Call Field Support.	-	4	2	2	4	3	3

KØR-0679-2

DLT 8 RTZ/CONTINUOUS SEEKS

Warning: None

Enters from: DLT 7

Procedures: None

References: Logic Diagrams

Exits to: DLT 9

Assumption:
1. TB304 FTU is connected to drive via A and B I/O cables
2. Local/Remote switch on drive (card A10) set to REMOTE
3. LAP installed and drive selected from FTU.

CONDITIONS	1	2	3	4	5	6	7	8
1. Actuate RTZ sw on FTU. Is RTZ seek successful?	Y	N	-	-	-			
2. Set up and perform continuous seeks.								
a) Set FTU's Access Mode sw to CONT.								
b) Set all FTU Cyl Adrs switches to "off" (down).								
c) Actuate START sw (on FTU).								
d) Sequentially select/deselect cylinder address switches								
(1,2,4...256, 512) to step actuator between track 0 and								
track selected by active cyl adrs switch.								
Is Continuous Seek successful?	Y	-	N	-	-			
3. Select track (cyl) 822 on FTU panel:								
• Set Cyl Adrs switches to 1466_8; START.								
Was seek to track 822 successful?	Y	-	-	N	-			
4. Select track (cyl) 823 on FTU panel:								
• Set Cyl Adrs switches to 1467_8; START.								
Does Seek Error result when seeking to track 823?	Y	-	-	-	N			

ACTIONS	1	2	3	4	5	6	7	8
1. Seeks properly executed. Go to DLT 9.	X	-	-	-	-			
2. Replace card B08 (Access Control, Index/Sector Decode).	-	1	1	1	1			
3. Replace card B09 (Access Control 1).	-	2	-	-	-			
4. Replace card A08 (Access Control 2).	-	3	-	-	-			
5. Replace card A07 (D/A Function Generator).	-	4	3	3	3			
6. Replace cards B02 (Ch 1 rcurs), B04 (Ch 2 rcurs).	-	5	4	4	4			
7. Replace card B06 (Diff Generator and Control).	-	-	2	2	2			
8. Call Field Support.	-	6	5	5	5			

KØR-0679-2

DLT 9 WRITE/WRITE FORMAT (sheet 1 of 2)

Warning: None

Enters from: DLT 8

Procedures: None

References: Logic Diagrams

Exits to: DLT 10 or sheet 2 of this DLT

Assumption: 1. FTU connected to drive and FTU switches set per "Preliminary Set-up" in Operation section of TB304 manual. In addition, FTU Wrt-Rd Select switch set for either WRT or WRT FORMAT operation.

CONDITIONS	1	2	3	4	5	6	7	8
1. FAULT indication is given when drive is connected to controller but not when connected to FTU?	N	Y	–	–				
2. FAULT light on FTU panel comes on?	N	N	Y	Y				
3. FAULT light on SMD panel comes on?	N	N	N	Y				

ACTIONS	1	2	3	4	5	6	7	8
1. No problem. Go to DLT 10.	X							
2. Check that Write Protect switches are OFF.		X						
3. Check that +5 V is present at operator panel (-ZYN brd). If present, replace -ZYN board.			X					
4. Go to Condition 4 on sheet 2.				X				

KØR-0679-2

DLT 9 WRITE/WRITE FORMAT (sheet 2 of 2)

Warning: None

Enters from: Sheet 1

Procedures: None

References: Logic Diagrams

Exits to: DLT 10

Assumption: 1. FTU connected to drive and FTU switches set per "Preliminary Set-up" in Operation section of TB304 manual. In addition, FTU Wrt-Rd Select switch set for either WRT or WRT FORMAT operation.

	CONDITIONS	5	6	7	8	9	10	11	12	13	14		
2,3.	FAULT indications on both SMD and FTU panels? (From sheet 1.)	Y	Y	Y	Y	Y	Y	Y	Y	Y	Y		
4.	Is fault limited to certain groups of contiguous addresses?	Y	N	-	-	-	-	-	-	-	-		
5.	Does fault appear only for WRT FORMAT operations?	-	-	Y	N	-	-	-	-	-	-		
6.	Set FTU Addr/Sect Mk switch to SECT MK and try again.												
	Does FAULT light still come on?	-	-	-	-	N	Y	-	-	-	-		
7.	Check LEDs on operator panel:												
	a) WRT FLT on?	-	-	-	-	-	-	Y	-	-	-		
	b) HD SEL FLT on?	-	-	-	-	-	-	-	Y	-	-		
	c) WR · RD FLT on?	-	-	-	-	-	-	-	-	Y	-		
	d) $\overline{\text{ON CYL}}$ · (W + R) on?	-	-	-	-	-	-	-	-	-	Y		
	ACTIONS												
5.	Replace card B06 (Cyl Addr Reg).	1	-	-	-	-	-	-	-	-	-		
6.	Go to Condition 5.	-	X	-	-	-	-	-	-	-	-		
7.	Go to Condition 6.	-	-	X	-	-	-	-	-	-	-		
8.	Go to Condition 7.	-	-	-	X	-	-	-	-	-	-		
9.	Suspect cards A02, B10 (Address Mark Enable).	-	-	-	-	1	-	-	-	-	-		
10.	Restore sw to ADDR MK position, repeat test and go to Condition 7.	-	-	-	-	-	X	-	-	-	-		
11.	Chk that FTU's Servo Offset sw is "off" (center position).	-	-	-	-	-	-	1	1	1	1		
12.	Replace card A01 (Write PLO).	-	-	-	-	-	-	2	-	-	-		
13.	Replace card B07 (NRZ → MFM).	-	-	-	-	-	-	3	-	-	-		
14.	Replace cards B02 (ch 1 rcurs) and B04 (ch 2 rcurs).	-	-	-	-	-	-	4	2	2	-		
15.	Replace card A10 (Write Protect).	-	-	-	-	-	-	5	-	3	2		
16.	Replace card B09 (On Cyl).	-	-	-	-	-	-	-	-	-	3		
17.	Replace Writer (A3A03).	2	-	-	-	2	-	6	-	4	4		
18.	Replace Hd Sel/Rd Amp (A3A02).	-	-	-	-	-	-	-	3	-	-		
19.	Call Field Support.	3	-	-	-	3	-	7	4	5	5		

KØR-0679-3

DLT 10 READ

Warning: None

Enters from: DLT 9

Procedures: Head Replacement, Alignment (section 2C)

References: Logic Diagrams

Exits to: DLT 11

Assumption: FTU connected to drive. FTU switches set per "Preliminary Set-up" in Operation section of TB304 manual. In addition, FTU Wrt-Rd Select switch set to RD.

CONDITIONS	1	2	3	4	5	6	7	8
1. Was address read properly? (1)	Y	Y	Y	N	N			
2. Was data read properly? (1)	Y	Y	N	-	-			
3. Are errors head-related?	-	N	Y	N	Y			
ACTIONS								
1. No problem. Go to DLT 11.	X	-	-	-	-			
2. Check that Data switches on FTU are set to read the pattern previously written on the disk.	-	1	-	-	-			
3. Replace card A06 (Read PLO; MFM → NRZ).	-	2	-	2	-			
4. Replace card A05 (Data latch).	-	3	-	3	-			
5. Replace card A08 (Offset).	-	4	-	4	-			
6. Replace cards B02, B04 (Ch 1, Ch 2 rcurs).	-	5	-	5	-			
7. Replace cards B01, B03 (Ch 1, Ch 2 xmtrs).	-	6	1	6	1			
8. Check head alignment (see Procedures, above).	-	7	2	7	2			
9. Replace Hd Sel/Rd Amp (A3A02).	-	8	-	8	-			
10. Replace faulty head(s). See Procedures, above.	-	-	3	-	3			
11. Reformat disk per WRT FORMAT procedure in TB304 manual.	-	-	-	1	-			
12. Call Field Support.	-	9	4	9	4			

(1) A NO answer here implies that the procedures given in the TB304 manual's Trouble Analysis DLT have already been tried in an attempt to recover the address or data, but to no avail.

KØR-0679-2

DLT 11 POWER DOWN

Warning: None

Enters from: DLT 10 or as desired

Procedures: None

References: Logic Diagrams

Exits to: None (Diagnostics terminate with this DLT)

Assumption: Remote operation – Attempt to power down the drive from FTU panel
Local operation – Press START sw on SMD panel to extinguish START light and power down the drive.

CONDITIONS	1	2	3	4	5	6	7	8
1. START light goes out? (LOCAL mode only.)	Y	Y	Y	Y	N			
2. Heads unload?	Y	Y	Y	N	-			
3. Drive motor brakes to a stop?	Y	N	N	-	-			
4. Drive motor coasts to a stop?	N	N	Y	-	-			

ACTIONS								
1. Diagnostics have been completed satisfactorily.	X	-	-	-	-			
2. Check deck interlock sw (A1A4), or wiring, for grounds.	-	1	-	-	-			
3. Check that Heads Loaded sw (A3S2) has transferred. A10-30B should be at ground.	-	2	-	-	-			
4. Check hysteresis brake and intervening connectors (JA80,J303). If OK, go to next recommended Action.	-	-	1	-	-			
5. Replace card A10 (Start, Braking Control).	-	3	2	-	-			
6. Replace card B09 (RTZ Latch).	-	-	-	1	-			
7. Replace card A07 (Summing Amp).	-	-	-	2	-			
8. Replace card A09 (Pwr Amp Control).	-	-	-	3	-			
9. Cathode of START indicator (LED) grounded. Check card A10 diagrams for how.	-	-	-	-	1			
10. Call Field Support.	-	4	3	4	2			

KØR-0679-2

PROCEDURES

PROCEDURE A: CHECKING DC VOLTAGES

This procedure, in addition to defining voltage checkpoints for a normal-load situation, also defines checkpoints on the power supply boards themselves. These are helpful in the event that the dc loads have been disconnected (by separating connectors P/J1A and P/J1B) for a checking a supply.

NOTE

> Output voltage from the ±5 V regulated supply will fall to 0 volts when the 5 V loads are removed. As implied in table B-2, no-load readings on this supply will prove fruitless.

Voltage readings in table B-2 may be obtained by using either a standard (needle type) or digital volt-ohmmeter. Table A-3 gives the usual symptoms for a malfunctioning power supply. Because spare parts for the components on the supply boards are not usually provided, a power supply board is normally not repaired in the field, but simply replaced.

PROCEDURE:

1. Turn off POWER SUPPLY breaker.
2. Raise logic chassis (assembly A2) to maintenance position.
3. Remove the spanner bar from the card extender to gain clearance for the components on the p.s. boards.
4. Remove the ±20 V p.s. board (A1A02) from assembly A1 and install in the card extender.
5. Insert the extender (and A1A02) into the A1 mother board.
6. Turn on the POWER SUPPLY breaker.
7. Using the probe connections from the NORMAL LOAD columns on table B-2, check each supply voltage.

TABLE B-2. CHECKING DC VOLTAGES*

Volt-Ohmmeter Connections

Voltage to be checked	Normal Load P/J1A Mated P/J1B Mated		No Load - P/J1A Separated P/J1B Separated		Voltage Readings
	+ Probe	- Probe	+ Probe	- Probe	
+5	+5 Faston	GND Faston	Cannot be checked		+5.0 (±0.05)
-5	GND Faston	-5 Faston	Cannot be checked		+5.0 (±0.05)
+12	A1A02-27A	A1A02-01A	A1A02-27A	A1A02-01A	+12.0 (±0.3)
-12	A1A02-01A	A1A02-08A	A1A02-29A	A1A02-08A	+12.0 (±0.3)
+20	+20 Faston	GND Faston	A1A02-29A	A1A02-01A	+20.0 (±1.0)
-20	Gnd Faston	-20 Faston	A1A02-01A	A1A02-05A	+20.0 (±1.0)
+42	A2A04-32B	A2A09-17B	A1A01-33A	A1A01-01A	+42.0 (±2.0)
-42	A2A09-17B	A2A04-03B	A1A01-01A	A1A01-02A	+42.0 (±2.0)

*Power supply boards A1A01 (±42 V) and A1A02 (±12, ±20 V) must be fitted to a card extender to permit access to the pins. Other connections are available when the logic chassis (A2) is raised to the maintenance position.

TABLE B-3. FAILURE SYMPTOMS IN POWER SUPPLIES

Symptom	Probable Cause
1. Noticeable ripple at output (checked with oscilloscope)	Open diode or open filter capacitor.
2. Less than specified output (ac input OK)	Shorted diode or shorted filter capacitor
3. Output decreases significantly when load is connected.	Open bleeder resistor

NOTE

The connections shown facilitate using a continuous-scale meter. For a meter having a zero-center scale, it is not necessary to switch the probes for mins-voltage readings.

8. Turn off the POWER SUPPLY breaker.

9. Separate connectors P/J1B and P/J1A, located at the front of the A1 motherboard. Press in on the plastic locking tabs with the fingers of one hand while pulling up on the connector with the other hand.

10. Turn on the POWER SUPPLY breaker.

11. Using the probe connections shown in the NO LOAD columns of table B-2, check the ±12 and ±20 voltages. (Note that the ±4 voltages cannot be checked without a load.)

12. Turn off the POWER SUPPLY breaker.

13. Remove the card extender from slot A1A02, and the ±42 V p.s. board from slot A1A01.

14. Remove the ±20 V p.s. board from the card extender.

15. Install the ±42 V p.s. board in the card extender and insert the extender in slot A1A01.

NOTE

Future steps will be easier if you do not install the ±20 V p.s. board in A1 at this time.

16. Turn on the POWER SUPPLY breaker.

17. Check the ±42 NO LOAD voltages, using the probe connections from table B-2.

18. Turn off the POWER SUPPLY breaker.

19. Remove the card extender and reinstall the ±20 V and ±42 V p.s. boards in A1.

20. Reconnect P/J1A and P/J1B.

21. Return the logic chassis to its normal position if further maintenance is not to be performed at this time.

PROCEDURE B: CHECKING AC INPUTS TO POWER SUPPLY BOARDS

This procedure verifies that a given secondary winding of ferroresonant transformer T1 has the requisite voltage to drive its associated power supply board. The procedure should also be performed after a power supply board has been repaired or replaced, and before that board is reinserted in assembly A1, to ensure that the previously malfunctioning supply did not damage the transformer.

SPECIAL NOTE

> The three power supply boards constitute the load for transformer T1 and its tuning capacitor, A1C8. When using procedure B to check the ac input to these boards, do not remove more than two boards at any one time. to do so will cause T1 to go into oscillation, producing meaningless readings.

Table B-4 shows the oscilloscope connections for monitoring the ac input to each supply board. Figure B-1 shows the square-wave input and specified voltages, the latter also given in the table.

NOTE

> Don't forget that the card pins are numbered 34 through 21, and 17 through 01; pins 20, 19, and 18 are omitted. The pins are given as they appear, left to right, in the card extender that is installed in the appropriate slot in assembly A1 in order to give easy access to the motherboard.

Procedure:

1. Turn off POWER SUPPLY (PS) breaker.

2. Determine which power supply board is to have its ac input checked, and remove that board from power supply assembly A1.

3. Insert a card extender in the A1 slot vacated by the removed board.

4. Plug in the test scope and set the trigger control to LINE. Turn on the scope and when the horizontal trace becomes visible, center it on the graticule.

TABLE B-4. CHECKING AC INPUTS TO POWER SUPPLIES*

Supply To Be Checked for AC Input	Scope Connections		AC Input Put Voltages (±5%)
	+Probe (AC Input)	GND Probe (Center Tap)	
±5 V	A1A03-17A A1A03-15A	A1A03-28A	11 V
±20 V	A1A02-23A A1A02-21A	A1A02-01A	22 V
±42 V	A1A01-14A A1A01-12A	A1A01-01A	44 V

* Use card extender for easy access to motherboard pins listed in table.

5. Connect the scope's ground probe to the appropriate pin given in table B-4.

6. Turn on the POWER SUPPLY (PS) breaker.

7. Connect the scope's + probe (i.e., CH1 or CH2, depending upon scope set-up) to either of the AC INPUT pins given in the table.

8. Adjust scope's TIME/DIV control to secure a stable square-wave trace (ref: figure B-1).

9. Adjust scp>e's VOLTS/DIV control to allow easy mental reckoning of the voltage represented by the trace, as shown against the graticule lines.

10. Record the voltage (or make a mental note if you trust your visual memory) from the ground reference line on the graticule to the top and bottom of the trace, (two readings) as indicated by "E" in figure B-1.

11. Repeat step 10 with the + probe connected to the other ac input pin.

OSCILLOSCOPE SETTINGS

SCOPE GND TO LOGIC GND

VOLTS/DIV
- CH 1 – 1 ①
- CH 2 – NA

TIME/DIV
- A – VARY FOR CONVENIENT TRACE
- B – NA

TRIGGERING
- A (USE X1 PROBE) – LINE
- B (USE X PROBE) – NA

PROBE CONNECTIONS
- CH 1 (USE X1 PROBE) – 1 ②
- CH 2 (USE X PROBE) – NA

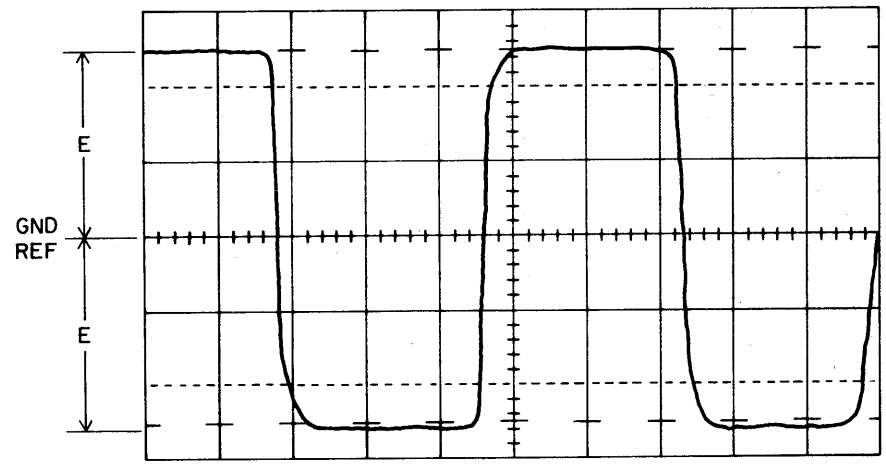

① ±5 V: E = 11 V
±20 V: E = 22 V
±42 V: E = 44 V

② SEE TABLE

9K68

Figure B-1. T1 Input to Power Supplies

12. If both steps 10 and 11 show a symmetrical waveshape about the ground reference line (that is, all four voltage readings are the same), and are within the 5% tolerance specified in tabel B-4, the T1 windings for that particular supply are OK. If you wish to check the no-load dc voltages of the supply as outlined in Procedure A, turn off the PS breaker and insert a good p.s. board in the card extender. Otherwise, remove the extender and insert a good p.s. board in the motherboard (assembly A1).

13. If the voltage readings are not the same, or if they are the same but not up to the 5% tolerance of tabel B-4, the problem has to be a shorted winding in T1. (You may be able to confirm this by sniffing the transformer for evidence of burned insulation, although this is not a definitive test.) Proceed to step 14.

WARNING

Tuning capacitor A1C8 is charged with 440 volts. Treat it with respect.

14. Replace T1: Turn off the AC and PS breakers; discharge A1C8 and remove leads connecting it to T1; separate P/J100 (it will be necessary first to separate connectors P/J1B and P/J1A); note the position of the two T1 leads connected to TB1 and remove those leads from TB1. Install the new transformer by reversing this process.

15. Check the new transformer by repeating steps 5 through 11.

Procedure C: Troubleshooting Heat-Generated Problems |(#1 Hdg.)|

CAUTION

> If the heads perform an unscheduled retract and the START and FAULT lights are both off, immediately turn off the POWER SUPPLY breaker; you have dropped +5 V and run the risk of burning up the voice coil. Only after you've shut off dc power should you check to see if the power-down resulted from a failure on the ac line. (Hint: check to see if blower is still on).

If you commit the above CAUTION to memory and act instinctively upon it, you may one day save yourself a lot of trouble; failure of the +5 V supply is a common cause for abnormal shutdowns.

Heat-related problems are easy to diagnose: they occur only when the drive gets hot, and they disappear when the drive has had a chance to cool off. If you suspect a problem is heat-related, let the drive cool down, then note the failure (or more accurately, the absence of the failure) when the drive is started up again. Often the troubleshooting period can be shortened by applying artificial heat to the suspected area (a hair dryer is useful here). Once you've diagnosed the problem, correct it as you would any other malfunction.

Heat problems are of two types -- those originating in the power supplies and those developing in the various loads. Should a load fault take out a 20 V or 42 V fuse, the course is clear: simply refer to the applicable "load" DLT. If the load does not pop a fuse but merely brings up a FAULT light (on the back of the operator panel), the table below should offer a starting point for correcting the problem. (If the +5 V supply goes, of course, the fault lights won't work.)

FAULT	PROBLEM RELATED TO
Voltage (except +5 V)	A03, A04, A09
On Cyl. (W+R)	A03, B02, B09
Write	A03, A04, B01, A3A03 (Write Driver Board)
W·R	A04, B02
Hd Sel	A02, A04, A3A02 (Hd Sel/Rd Amp board)

Losing ±5 V can be bothersome because those supplies maintain a uniform output voltage right up to their current limit, and then drop to 0 V when that limit is exceeded. Should this happen, check to see if the supply itself is the culprit by disconnecting the 5 V load. If the voltage returns to 5 V, the fault lies in the load, not the supply.

PROCEDURE D: PIN-POINTING VOLTAGE FAULTS IN THE LOGIC CHASSIS

This procedure locates ±5 V, ±20 V, and ±42 V faults on cards in the logic chassis or in the logic chassis backpanel wiring. (There is no ±12 V load in logic chassis assembly A2.)

The test procedure may be conducted in either of two ways. The first method is to check the ±5 V, and ±42 loads individually by entering Procedure D from the applicable DLT:

±5 V -- Condition 1 of DLT 3

±20 V -- Condition 1 of DLT 4

±42 V -- Condition 3 of DLT 6

The second method is to check all three loads at the same time. The test for load faults in each voltage is made by adding cards to the logic chassis one at a time, so it is more efficient to check all three loads on a given card at one time. (Of course, some cards will not require all three checks.)

The second method is the one described below, and requires that the tests for Conditions 1 and 2 of DLT 6 have been satisfactorily completed before entering the procedure.

NOTE

It should be pointed out that, as shown in table B-1, only ±5 V is used on every card. If there is no ±5 V fault in the logic chassis, only the cards using the faulted voltage(s) need to be removed.

1. Be certain that Conditions 1 and 2 of DLT 6 have been tested with satisfactory results before proceeding with step 2. (Condition 1 checks the servo capacitors, Condition 2 the power amplifier.)

2. Turn off the POWER SUPPLY (PS) breaker.

3. Ensure that all three power supply boards are properly seated in the power supply motherboard.

4. Separate PA80 and PA81 from their jacks on the logic chassis.

5. Ensure that all other connectors are properly mated.

6. Remove all cards from the logic chassis. (See NOTE, above, for possible exception to this "all cards" rule.)

7. Turn on the PS breaker.

8. Load faults caused by wiring errors in (or damage to) the logic chassis backpanel will show up as a blown fuse. Check the integrity of each fuse as described in DLT 1 and others. If a fuse blows, carefully raise the logic chassis to the maintenance position and check backpanel for grounds caused by bent pins or dangling wires. After clearing the fault, restore the logic chassis to its normal position.

9. Turn off the PS breaker. You are now ready to start putting the cards back in the logic chassis one at a time, checking for faults after each has been inserted.

10. Before inserting a card, examine both sides for evidence of arcing across the foil. Often the carbon residue around an arc area can be removed with an alcohol swab and the card won't give any more trouble.

11. Insert the selected card properly.

12. Turn on the PS breaker.

13. Using table B-1 to determine which voltages are present on the card, check the integrity of the applicable fuses.

14. If step 13 shows a blown fuse, turn off the PS breaker, replace the card just installed with a fresh one from the spare parts bin and try the test again.

15. If step 13 shows that the fuses are OK, turn off the PS breaker and, selecting another card, repeat steps 10 through 15.

16. When all cards have been checked good, return to the applicable "load fault" DLT to continue the dc-load checkout on the additional assemblies.

COMMENT SHEET

MANUAL TITLE:

PUBLICATION NO.: REVISION:

NAME: _____

COMPANY: _____

STREET ADDRESS: _____

CITY: _____ STATE: _____ ZIP CODE: _____

This form is not intended to be used as an order blank. Control Data Corporation welcomes your evaluation of this manual. Please indicate any errors, suggested additions or deletions, or general comments below (please include page number references).

☐ Please Reply ☐ No Reply Necessary

CUT ALONG LINE

KØR-0502C PRINTED IN U.S.A.

NO POSTAGE STAMP NECESSARY IF MAILED IN U.S.A.

FOLD ON DOTTED LINES AND TAPE. POSTAL REGULATIONS PROHIBIT THE USE OF STAPLES.

FOLD

FOLD

FIRST CLASS
PERMIT NO. 8241

MINNEAPOLIS, MINN.

BUSINESS REPLY MAIL

NO POSTAGE STAMP NECESSARY IF MAILED IN U. S. A.

POSTAGE WILL BE PAID BY

CONTROL DATA CORPORATION
CUSTOMER DOCUMENTATION DEPARTMENT
7801 COMPUTER AVENUE
MINNEAPOLIS, MINNESOTA 55435

CUT ALONG LINE

OLD

FOLD

CORPORATE HEADQUARTERS, P.O. BOX 0, MINNEAPOLIS, MINN. 55440
SALES OFFICES AND SERVICE CENTERS IN MAJOR CITIES THROUGHOUT THE WORLD

LITHO IN U.S.A

CONTROL DATA CORPORATION